May 13, 2020

Applicant:
Domus Design
c/o Garo Nazarian
109 E. Harvard Street # 306
Glendale, CA 91205

RE: Design Review Case No. PDR 2002288
421 Salem St.

The Director of Community Development will render a final decision on or after **June 1, 2020**, for the following project:

PROJECT DESCRIPTION: To construct a new two-story, three-unit townhouse style residential project. As proposed, each unit will be two stories over an eight-space semi-subterranean garage. The total floor area for all three units will be 5,975 square feet on a 6,982 square-foot lot in the R-1650 (Medium-High Density Residential) zone. The existing buildings on-site, a house and garage constructed circa 1919, will be demolished.

STAFF RECOMMENDATION: APPROVE WITH CONDITIONS

For more information or to submit comments, please contact the case planner, Milca Toledo, at 818-937-8181 or mitoledo@glendaleca.gov.

Comments must be received prior to **June 1, 2020**, in order to be considered by the Director.

DECISION: A decision letter will be posted online on or after the date listed above and may be accessed online at: http://www.glendaleca.gov/planning/decisions. You may also request notification of the decision when the decision is rendered.

Should you wish to file an appeal of the decision, the appeal must be filed within 15 days of the date of the decision as shown on the decision letter. Appeal applications are available at the Permit Services Center, 633 E. Broadway, Room 101, Glendale, CA 91206 or online at http://www.glendaleca.gov/appeals.

Sincerely,

Milca Toledo
Senior Planner

City of Glendale
Community Development Department

Design Review Staff Report – Multi-Family

Meeting/Decision Date: June 1, 2020	**Address:** 421 Salem Street, 91203
Review Authority: ☐DRB ☒ADR ☐HPC ☐CC	**APN:** 5637017031
Case Number: PDR 2002288	**Applicant:** Domus Design c/o Garo Nazarian
Prepared By: Milca Toledo	**Owner:** Manooki Vanik & Merzakhani Alis

Project Summary

To construct a new two-story, three-unit townhouse style residential project. As proposed, each unit will be two stories over an eight-space semi-subterranean garage. The total floor area for all three units will be 5,975 square feet on a 6,982 square-foot lot in the R-1650 (Medium-High Density Residential) zone. The existing buildings on-site, a house and garage constructed circa 1919, will be demolished.

The proposed work includes:

- The new, two-story, three-unit residential project will have three, three-bedroom units ranging from 1,865 square feet to 2,184 square feet, bathrooms, kitchen, living area, dining areas and private laundry facilities.
- The units include individual private open space designed as a patio on the ground floor for the 2nd and 3rd units and a balcony on the 2nd floor for the first unit facing the street.

Existing Property/Background

The subject property is an interior lot developed circa 1919 on the north side of Salem Street, in a medium-high density residential zone of predominantly multi-family development. The rectangular shaped lot is relatively flat and similar to other lots in the neighborhood. The existing 1,045 square-foot single-family residence (designed in the Craftsman style) and detached garage will be demolished as part of this project.

The subject property was identified in the South Glendale Historic Resources Survey as not being eligible for designation at the local, state, or federal level (State Historic Resource Code 6Z) and it is therefore not a historic resource under CEQA.

Staff Recommendation

☐ Approve ☒ Approve with Conditions ☐ Return for Redesign ☐ Deny

---

Last Date Reviewed / Decision

☒ First time submittal for final review.
☐ Other:

Zone: R1650 - Medium High Density Residential
Although this design review does not convey final zoning approval, the project has been reviewed for consistency with the applicable Codes and no inconsistencies have been identified.

Active/Pending Permits and Approvals

☒ None
☐ Other:

CEQA Status:

☐ The project is exempt from CEQA review as a Class 1 “Existing Facilities” exemption pursuant to Section

15301 of the State CEQA Guidelines because .

☒ The project is exempt from CEQA review as a Class 3 "New Construction or Conversion of Small Structures" exemption pursuant to Section 15303 of the State CEQA Guidelines because the proejct involves the construction of a new 3-unit multi-family residential project in multi-family residential zone.

☐ The project is exempt from CEQA review as a Class 32 "Infill Development" exemption pursuant to Section 15332 of the State CEQA Guidelines because .

☐ Other:

Site Slope and Grading

☒ None proposed

☐ Less than 50% current average slope and less than 1500 cubic yards of earth movement (cut and/or fill); no additional review required.

☐ 1500 cubic yards or greater of earth movement:

☐ 50% or greater current average slope:

DESIGN ANALYSIS

Site Planning

Are the following items satisfactory and compatible with the project site and surrounding area?

Building Location

☒ **yes** ☐ **n/a** ☐ **no**

If "no" select from below and explain:

☐Setbacks of buildings on site

☐Prevailing setbacks on the street

Yards and Usable Open Space

☒ **yes** ☐ **n/a** ☐ **no**

If "no" select from below and explain:

☐Outdoor space integrated into site design and acknowledges adjacent development

☐Common space easily accessible from all units

☐Appropriate separation/screening from residential units

☐Discrete seating and amenity areas allow for multiple users

Garage Location and Driveway

☒ **yes** ☐ **n/a** ☐ **no**

If "no" select from below and explain:

☐Garage fully integrated into overall structure

☐Driveway and curb-cut widths minimized

☐Grade-level garages and parking, if allowed, are appropriately screened from the street

☐Decorative paving complements building design

☐Stairs and lifts to subterranean garages incorporated into the design of the project

Landscape Design

☒ **yes** ☐ **n/a** ☐ **no**

If "no" select from below and explain:

☐Complementary to building design

☐Maintain existing trees when possible

☐Provide landscaping adjacent to driveways and garages

☐20% of planting at above-grade common spaces is within 9 inches of finish floor
☐Above-grade tree wells are at least 6 inches higher than box size of tree

Walls and Fences
☒ **yes** ☐ **n/a** ☐ **no**

If "no" select from below and explain:
☐Appropriate style/color/material for building design
☐Perimeter walls treated at both sides
☐Retaining walls minimized
☐Appropriately sized and located

Equipment, Trash, and Drainage
☒ **yes** ☐ **n/a** ☐ **no**

If "no" select from below and explain:
☐Equipment screened and well located
☐Trash storage out of public view
☐All screening integrated with overall building and/or landscape design
☐Downspouts appropriately located
☐Vents, utility connections integrated with design, avoid primary facades

Lighting
☐ **yes** ☐ **n/a** ☒ **no**

If "no" select from below and explain:
☐ Light fixtures are appropriate to the building and/or landscape design
☒ Avoid over-lit facades; consider ambient light conditions when developing lighting scheme
☐ Utilize shielded fixtures to avoid light spillover onto adjacent properties
The proposed design for the light fixtures on the building is appropriate. However, a condition is included to reduce the number of light fixtures proposed along the sides of the building by limiting their placement to to main entry and patio doors.

Determination of Compatibility: Site Planning

The proposed site planning is appropriate, as modified by any proposed conditions, to the site and its surroundings for the following reasons:

- The project is designed as a single structure with a rectangular building footprint, which is consistent with the shape of the lot and appropriately setback from the front, rear and side property lines.
- The site planning is compatible with that of neighboring properties, which consist of single- and multi-family residential buildings.
- The building maintains the prevailing street front setback of adjacent properties along the street.
- The proposed outdoor common open space at the rear of the building is well integrated into the site plan and is accessible from all units. Amenities and landscaped area are designed appropriately within the outdoor common space.
- The proposed landscape plan is complementary to the building design and includes drought tolerant landscaping. It is appropriately integrated into the design and consists of level and low raised planters.
- A five-foot high perimeter block wall with stucco finish to match the building is proposed and complements the site. A condition is added to have the side of these walls that face the neighbors have a split-face finish or otherwise be finished in an attractive manner.
- The proposed design for the light fixtures on the building is appropriate. However, a condition is included to reduce their number along the sides of the building by limiting their placement to main entry and patio doors.

Massing and Scale

Are the following items satisfactory and compatible with the project site and surrounding area?

Building Relates to its Surrounding Context

☒ **yes** ☐ **n/a** ☐ **no**

If "no" select from below and explain:

☐Relates to predominant pattern through appropriate proportions and transitions
☐Impact of larger building minimized

Building Relates to Existing Topography

☒ **yes** ☐ **n/a** ☐ **no**

If "no" select from below and explain:

☐Form and profile follow topography
☐Alteration of existing land form minimized
☐Retaining walls terrace with slope

Consistent Architectural Concept

☒ **yes** ☐ **n/a** ☐ **no**

If "no" select from below and explain:

☐ Concept governs massing and height

Scale and Proportion

☒ **yes** ☐ **n/a** ☐ **no**

If "no" select from below and explain:

☐Scale and proportion fit context
☐Articulation avoids overbearing forms
☐Appropriate solid/void relationships
☐Entry and major features well located
☐Avoids sense of monumentality

Roof Forms

☒ **yes** ☐ **n/a** ☐ **no**

If "no" select from below and explain:

☐Roof reinforces design concept
☐Configuration appropriate to context

Determination of Compatibility: Mass and Scale

The proposed massing and scale are appropriate, as modified by any proposed conditions, to the site and its surroundings for the following reasons:

- The mass and scale of the proposed building are appropriate to the surrounding development pattern of one, two, and three story buildings.
- The gabled roof forms, building mass, and proportions are appropriate to the style of the building and the neighborhood context.
- The massing is broken up by recessed building forms, breaks in roof and walls, fenestration and cladding material. Applying these features appropriately avoids long, blank horizontal facades as it creates an interesting design element and minimizes a boxy outline.

- The applicant's use of combined materials (e.g., brick and stucco) and different colors help to reinforce the reading of different volumes, and articulates the building.

Design and Detailing

Are the following items satisfactory and compatible with the project site and surrounding area?

Overall Design and Detailing

☒ **yes** ☐ **n/a** ☐ **no**

If "no" select from below and explain:

☐Design is compatible with neighborhood context
☐Design is stylistically consistent
☐Employs consistent vocabulary of forms and materials while expressing architectural variety
☐Cladding materials and

Entryway

☒ **yes** ☐ **n/a** ☐ **no**

If "no" select from below and explain:

☐Well integrated into design
☐Avoids sense of monumentality
☐Design provides appropriate focal point
☐Doors appropriate to design

Windows

☒ **yes** ☐ **n/a** ☐ **no**

If "no" select from below and explain:

☐Appropriate to overall design
☐Overall window pattern appropriate to style
☐Window operation appropriate to style
☐Recessed/flush window appropriate to style and/or location
☐Openings are well detailed

The window operation and locations are appropriate. However, a condition is included requesting window sections depicting a typical opening in a stucco-clad wall and brick-clad wall.

Privacy

☒ **yes** ☐ **n/a** ☐ **no**

If "no" select from below and explain:

☐Consideration of views from "public" rooms and balconies/roof decks
☐Avoid windows facing adjacent windows

Finish Materials and Color

☐ **yes** ☐ **n/a** ☒ **no**

If "no" select from below and explain:

☒Textures and colors reinforce design
☐High-quality materials, especially facing the street
☐Materials appropriately enhance articulation and façade hierarchies
☐Wrap corners and terminate appropriately
☐Cladding is well detailed, especially at junctions between materials
☐Foam trim, finished on site, is prohibited

While the combination of brick and stucco are appropriate, a condition is included to modify the stucco color to be more compatible with the brick cladding.

Paving Materials
☒ **yes** ☐ **n/a** ☐ **no**

If "no" select from below and explain:
☐Decorative material at entries/driveways
☐Permeable paving when possible
☐Material and color related to design

Ancillary Structures
☐ **yes** ☒ **n/a** ☐ **no**

If "no" select from below and explain:
☐Design consistent with primary structure
☐Design and materials of gates, fences, and/or walls complement primary structure

Determination of Compatibility: Design and Detailing

The proposed design and detailing are appropriate, as modified by any proposed conditions, to the site and its surroundings for the following reasons:

- The gabled roof over the different sections of the building, stucco and brick cladding, and metal railings at the balconies and side entry gates provide a variety of material and textures that will enhance the appearance of the building and make it compatible with the neighborhood.
- The stucco and brick cladding treatment are appropriately integrated and provide a sense of visual warmth to the design. A condition is included to modify the stucco color to be more compatible with the brick cladding.
- The bronze-colored vinyl windows are appropriate to the building and the neighborhood in terms of their material, operation and overall appearance.
- Overall, the project incorporates a variety of details including a combination of materials (stucco and brick), metal railings, recesses, roof forms etc., all complementary to the building and the neighborhood.

Recommendation / Draft Record of Decision

Based on the above analysis, staff recommends **approval** of the project with **conditions**, as follow:

Conditions

1. Reduce the number of light fixtures proposed along the sides of the building by limiting their locations to the main entry and patio doors.
2. Submit window sections depicting a typical opening in a stucco-clad wall and brick-clad wall.
3. Modify the stucco color to be more compatible with the brick cladding.
4. The faces of all perimeter walls facing the neighboring properties shall either consist of split-face block or another treatment that will enhance their appearance as viewed by the neighbors.

Attachments

1. Location Map
2. Photos of Existing Property
3. Reduced Plans

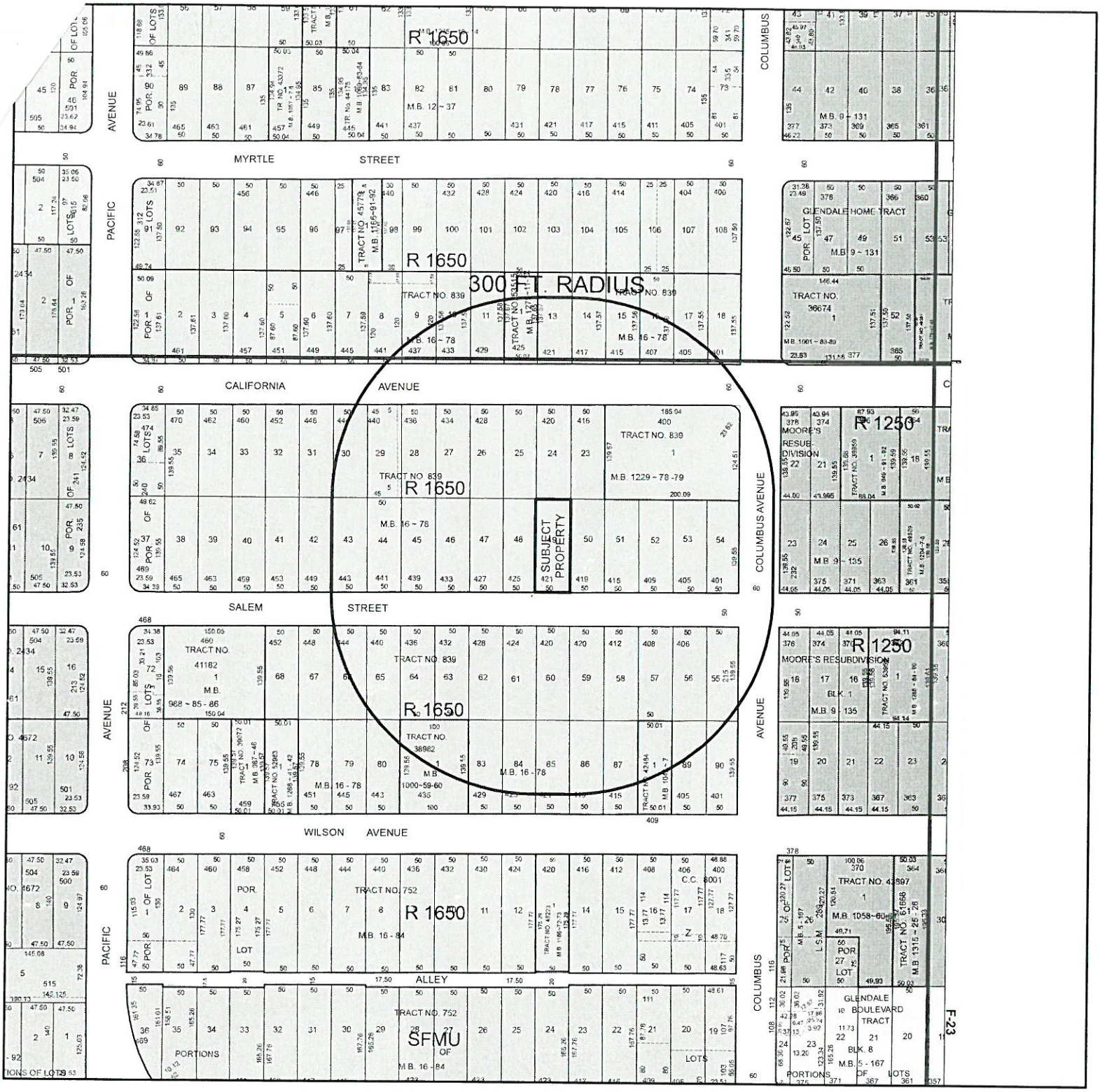

LOCATION MAP

SCALE: 1:200

N

DOMUS DESIGN

109 E. HARVARD ST, # 306, GLENDALE, CA. 91205
TEL: (818) 500-3966 FAX: (818) 548-8108

PROJECT ADDRESS: 421 SALEM ST.
GLENDALE, CA 91203

OWNER:

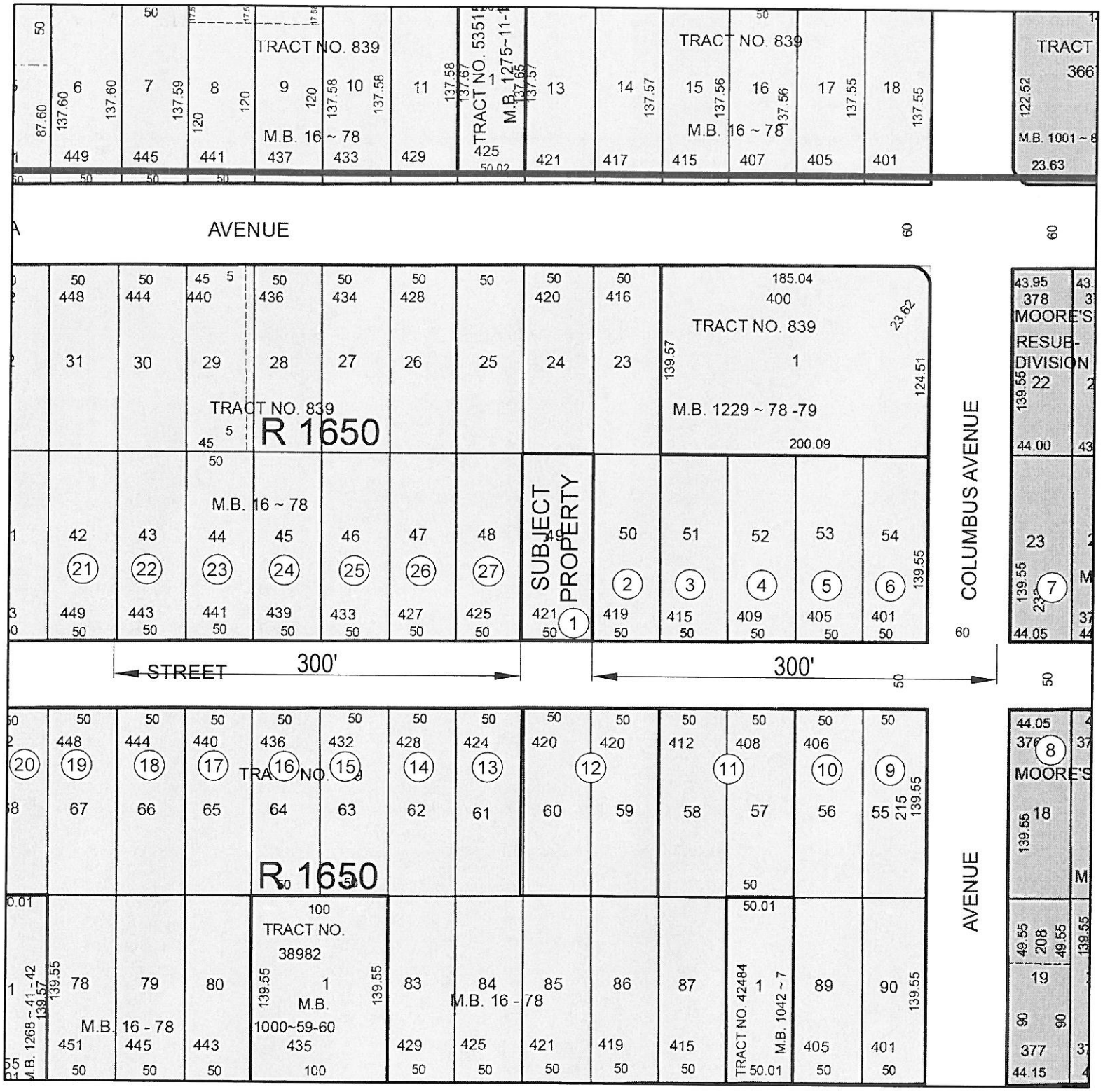

PHOTOGRAPHIC SURVEY MAP

SCALE: 1:100

N

DOMUS DESIGN
109 E. HARVARD ST, # 306, GLENDALE, CA. 91205
TEL: (818) 500-3966 FAX: (818) 548-8108

PROJECT ADDRESS: 421 SALEM ST.
GLENDALE, CA 91203

OWNER: VANIK MANOOKI
1725 MELWOOD DR.
GLENDALE, CA 91207

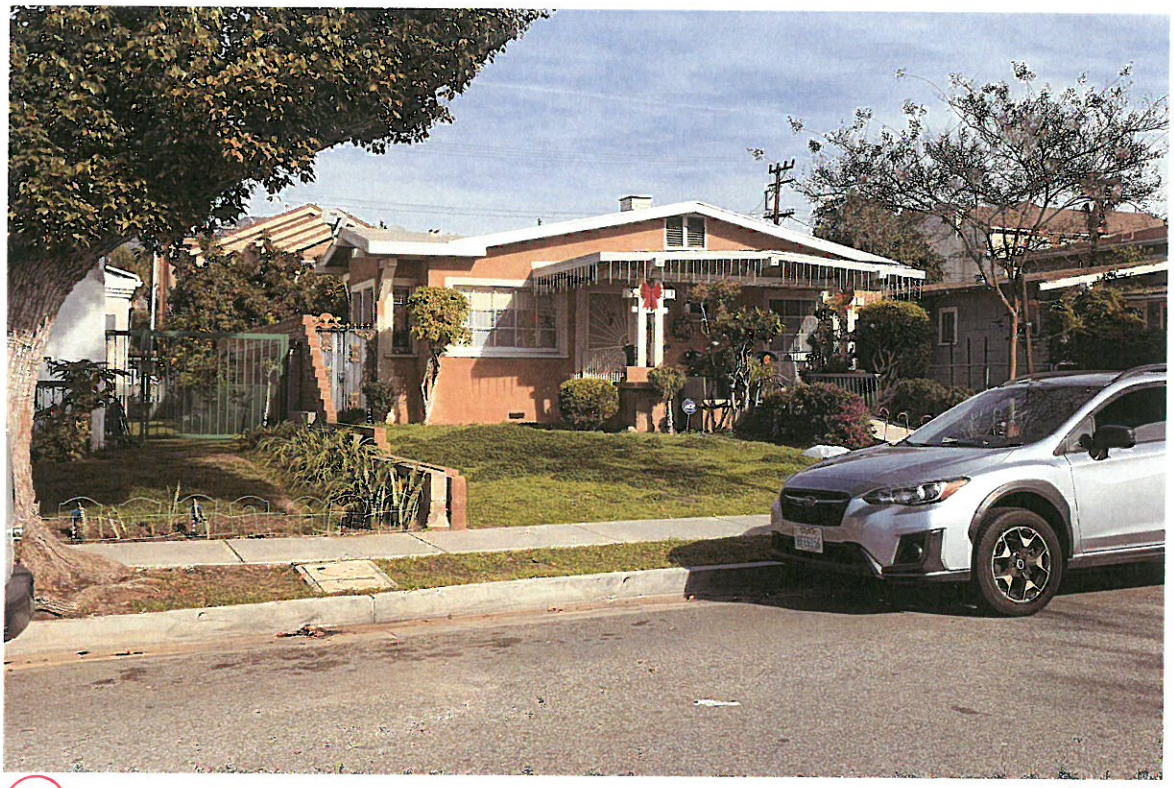

27

425

1 SUBJECT PROPERTY

2

419

3

415

4

409 SALEM

5

405 SALEM

6

401 SALEM

7

232 N. COLUMBUS

8

370 SALEM

8

370 SALEM

9

400 SALEM

10

406 SALEM

11

412 SALEM
408

12

420 SALEM

13

424 SALEM

13

424 SALEM.

(14) 428 SALEM

(15) 432 SALEM

16

16

436 SALEM

17

440 SALEM

18

444 SALEM

19

448 SALEM

20

452 SALEM

21

449 SALEM

22

449 SALEM

23

441 SALEM

24

439 SALEM

25

433 SALEM

26

427 SALEM

27

425 SALEM

PROJECT DESCRIPTION

NEW 2-STORY 3-TOWNHOUSE STYLE UNIT.
CONDOMINIUM.
This project is exempt from ADA regulation.
(3 Units Condominiums)

DESIGNER

DOMUS DESIGN
109 E. HARVARD ST. #306
GLENDALE, CA 91205
TEL: (818) 507-4444
FAX: (818) 548-81-08

PROJECT ADDRESS

421 SALEM STREET
GLENDALE CA 91203

ENGINEER (ENGINEER OF RECORD)

PATRICK BARATY
109 E. HARVARD ST. #306
GLENDALE, CA 91205
TEL: (818) 500-3966
FAX: (818) 548-8108

LEGAL DESCRIPTION

APN: 5637-017-031
TRACT # 839
LOT 49

SURVEYOR

LAWRENCE J. SCHMAHL
11209 HOWARD ST.
WHITTIER, CALIFORNIA 90606
(562) 908-0570 / (323) 773-1675

PROPERTY OWNER

VANIK MANOOKI
1725 MELWOOD DRIVE
GLENDALE CA 91207

SOIL ENGINEER

APPLIED EARTH SCIENCES
4742 SAN FERNANDO ROAD
GLENDALE, CA 91204
TEL: (818) 552-6000

APPLICABLE CODES

CBC 2016, CEC 2016, CMC 2016, 2016 CPC,
2016 CALIFORNIA ENERGY CODE, 2017
GLENDALE BUILDING AND SAFETY CODE
2016 CALIFORNIA GREEN CODE

VICINITY MAP

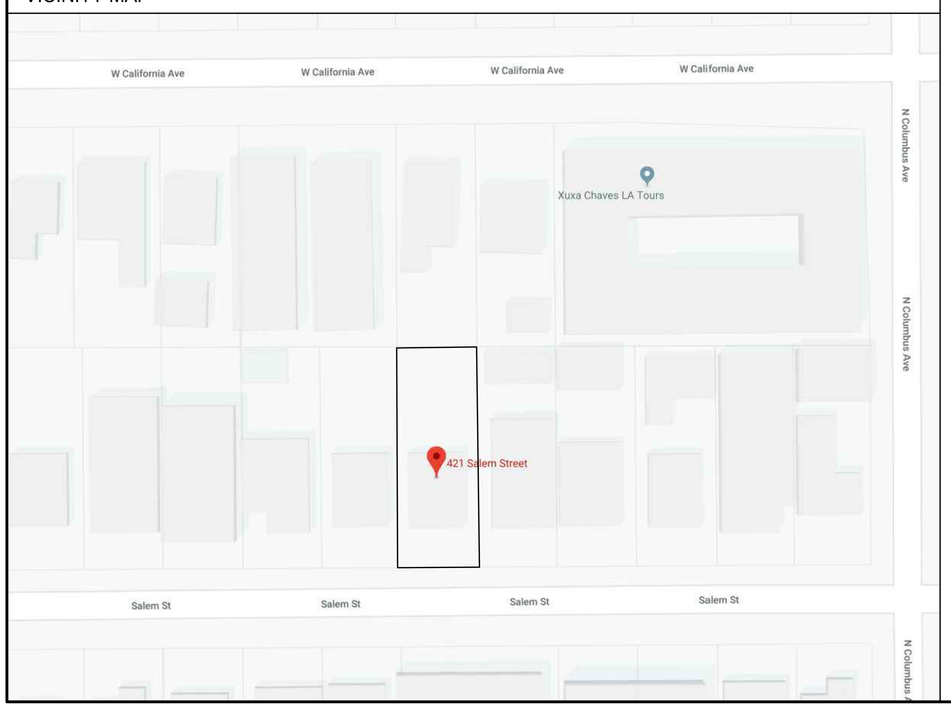

PROJECT DATA

ZONING:			R1650
LOT AREA :			6982 S.F.
TYPE OF CONSTRUCTION:			V-A
OCCUPANCY GROUP:			R-2 / S-2
NUMBER OF STORIES:			2
SPRINKLERED:			NFPA R-13
FIRE HAZARD ZONE:			NO
FLOOR AREA:			
	FIRST FLOOR	SECOND	TOTAL
UNIT 1:	1109.0 S.F.	1075 .0 S.F.	2184 S.F.
UNIT 2:	918.0 S.F.	947.0 S.F.	1865 S.F.
UNIT 3:	928.0 S.F.	998.0 S.F.	1926 S.F.
TOTAL:	2955 SQ.FT	3020 SQ.FT.	5975 SQ.FT.

ZONING INFORMATION:	REQUIRED / PERMITTED	PROPOSED / PROVIDED
RESIDENTIAL DENSITY: 6982 / 1650	4.2 = 4	3
FLOOR AREA RATIO:	1 (6982 SQ.FT.)	0.85 (5975 SQ.FT.)
LOT COVERAGE:	50%= 3491	44% (3092 SQ.FT.)
BUILDING HEIGHT:	2 ST. 26'-0" MAX. + 5'-0"	2 ST. (28'-7")
LANDSCAPING AREA:	25%(1746 SQ.FT)	25% (1766.5 SQ,FT)
COMMON OPEN SPACE	600 SQ.FT.	686 SQ.FT.
NUMBER OF PARKING:	7.5 = 8	8

DESIGN REVIEW BOARD CONDITIONS

SHEET INDEX

A-0 COVER SHEET
C-1 SURVEY MAP
A-1 SITE PLAN
A-2 ROOF PLAN
A-3 GARAGE PLAN
A-4 FIRST FLOOR PLAN
A-5 SECOND FLOOR PLAN
A-6 ELEVATION PLANS
A-7 SECTION PLANS
ZI-1 GARAGE AND FIRST FLOOR SETBACKS CALCULATION
ZI-2 SECOND FLOOR SETBACKS AND LOT COVERAGE CALCULATION
ZI-3 OPEN SPACE AND LANDSCAPING CALCULATION
L-1 LANDSCAPING PLAN
L-2 IRRIGATION PLAN
L-3 LANDSCAPE DETAIL & SPECIFICATION PLAN
R-1 PROJECT RENDERINGS

DOMUS DESIGN
109 E. HARVARD ST. , # 306, GLENDALE, CA. 91205
TEL: (818) 500-3966 , FAX: (818) 548-8108

RCB ENGINEERING
450 North Brand Blvd. # 600
Glendale, CA 91205
TEL: (818) 813-1852

REVISION	BY

OWNER
VANIK MANOOKI
1725 MELWOOD DRIVE
GLENDALE CA 91207

PROJECT
3 UNITS CONDOMINIUM
421 SALEM STREET
GLENDALE CA 91203

DRAWING TITLE
COVER SHEET

REGISTERED PROFESSIONAL ENGINEER
PATRICK BARATY
S 5900
EXP. 09.30.21
STRUCTURAL
STATE OF CALIFORNIA

DATE:	3/17/2020
SCALE:	N.T.S.
DRAWN:	A.M.
APPROVED:	
JOB:	2019-21
SHEET:	A-0
OF	SHEETS

LAWRENCE J. SCHMAHL LICENSED SURVEYOR PLS 5748
11209 HOWARD ST. WHITTIER, CALIFORNIA 90606 (562) 908-0570 / (323) 773-1675

TOPOGRAPHIC SURVEY

SCALE: 1" = 8' AUGUST, 2019

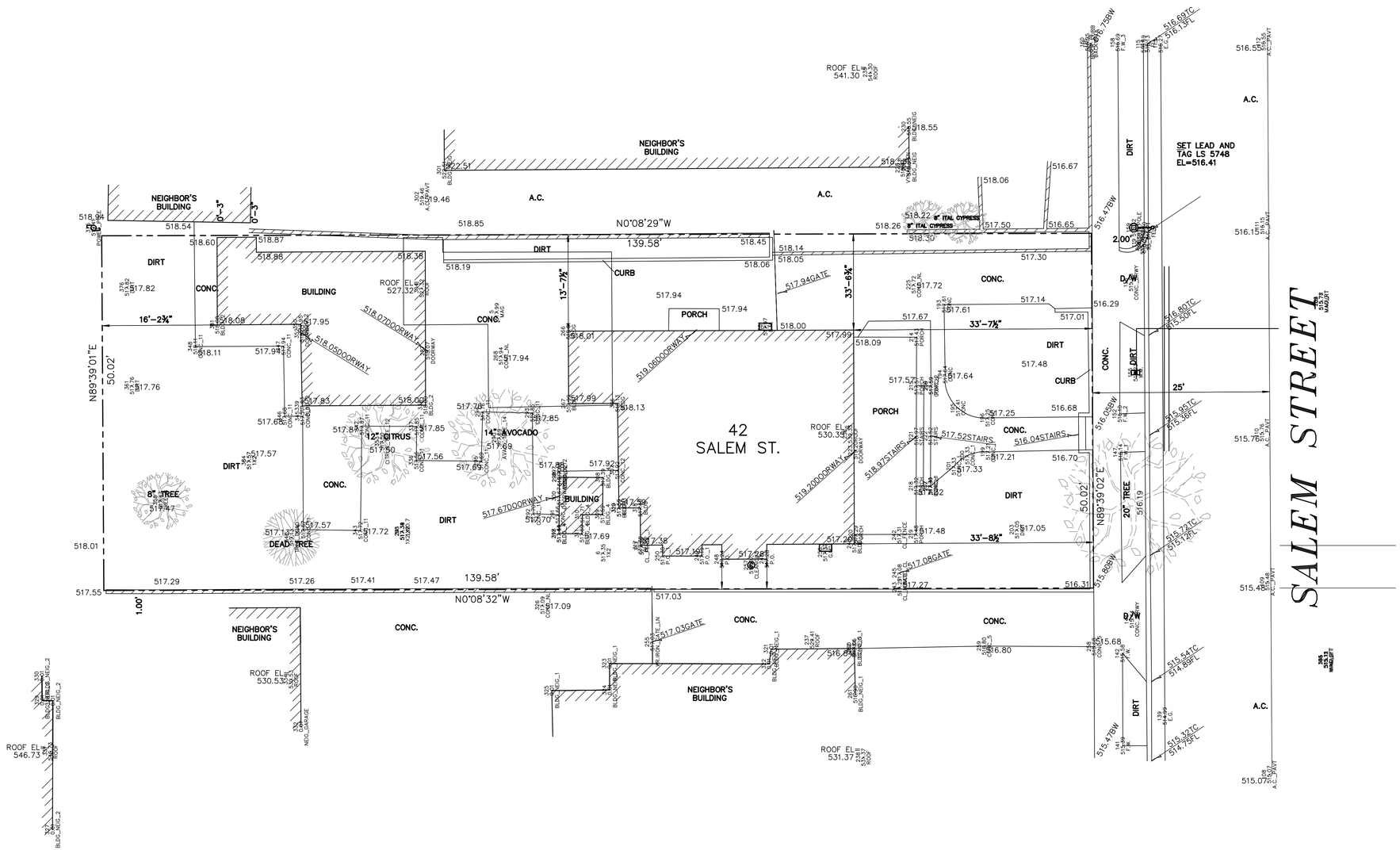

LEGAL DESCRIPTION:

LOT 49 OF TRACT NO. 839, IN THE CITY OF GLENDALE, COUNTY OF LOS ANGELES, STATE OF CALIFORNIA, AS PER MAP RECORDED IN BOOK 16, PAGE 78 OF MAPS, IN THE OFFICE OF THE COUNTY RECORDER OF SAID COUNTY.

BENCHMARK:

BRASS DISK IN WESTERLY CURB OF COLUMBUS AVE. @ SOUTHERLY TOP OF "X" WCR SOUTHWESTERLY CORNER. STAMPED 'BM 2305 SET 2006'

BM# 2305 EL=516.57FT (2006)

FOR:

VANIK MANOOKI

BY:

LAWRENCE J. SCHMAHL L.S. 5748

LEGEND:

A.C.	ASPHALT CONCRETE
BW	BACK OF WALK
CONC.	CONCRETE
D/W	DRIVEWAY
E	EAST
FF	FINISHED FLOOR
FL	FLOWLINE
N	NORTH
S	SOUTH
TC	TOP OF CURB
TG	TOP OF GRATE
TW	TOP OF WALL
W	WEST
	BUILDING LINE
	CENTERLINE
©	CLEAN OUT
	EDGE OF PAVEMENT
EM	ELECTRIC METER
	FENCE, CHAIN-LINK
	FENCE, WOOD
	FENCE, WIRE
GM	GAS METER
	LIGHT POLE
	POWER POLE
	PROPERTY LINE
Ⓢ	SEWER MANHOLE
52.52 52.52	SPOT ELEVATIONS
	WALL
WM	WATER METER
Ⓦ	WATER VALVE

JOB# 12987

NOTE:

THIS SURVEY DOES NOT INCLUDE EASEMENTS OF RECORD OR OTHERWISE, UNDERGROUND PUBLIC UTILITIES OR OTHER SUBSTRUCTURES, OR ZONE EASEMENTS, SETBACK OR STREET WIDENING DATA IF APPLICABLE.
ALTHOUGH REQUESTED, NO TITLE POLICY OR PRELIMINARY TITLE REPORT WAS MADE AVAILABLE TO THIS SURVEYOR.
IF THE EXISTING GRADES SHOWN ON THIS MAP ARE TO BE USED FOR CONSTRUCTION PURPOSES, IT IS THE RESPONSIBILITY OF THE PARTY USING THIS MAP TO VERIFY THE VERTICAL DATUM BY CHECKING BETWEEN AT LEAST FIVE EXISTING GRADES SHOWN HEREON.
IF THE INFORMATION ON THIS MAP IS TO BE INCLUDED IN CONSTRUCTION PLANS, THIS MAP IN ITS ENTIRETY MUST BE MADE A PART OF THOSE CONSTRUCTION PLANS.

THIS PROJECT IS EXEMPT FROM ADA REQUIREMENT
3 UNITS CONDOMINIUM

there are NO any protected tree – Oak, Bay or sycamore on or within 20 feet of the site

AVERAGE TOP OF CURB CALCULATION:
T.O.C. ELEV. AT EAST CORNER: 516.30
T.O.C. ELEV. AT WEST CORNER: 515.72
AVERAGE GRADE: (516.30 + 515.72) / 2 = 516
T.O.DECK : 519

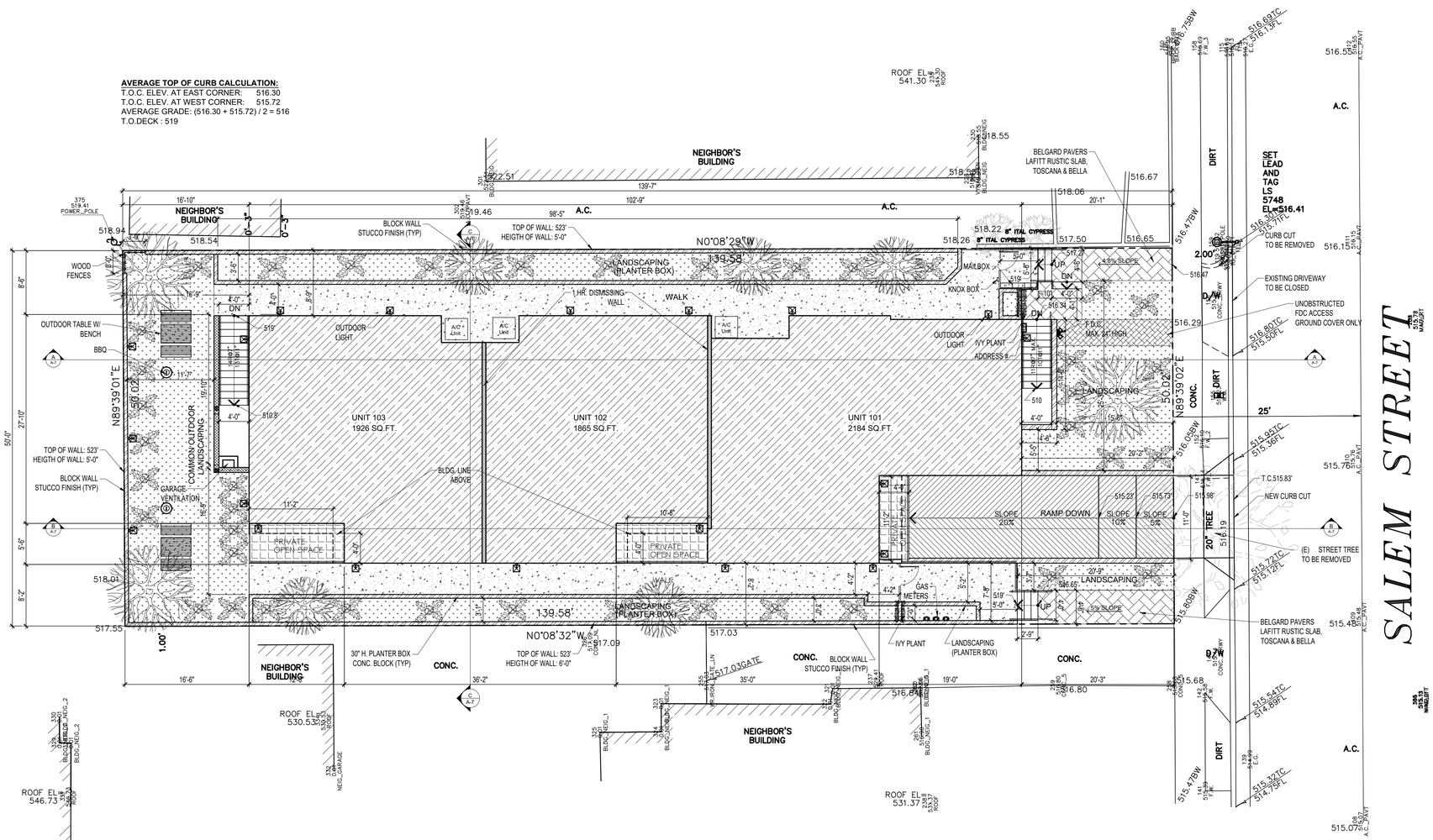

SITE PLAN

Scale: 1/8"=1'-0"

DOMUS DESIGN
109 E. HARVARD ST., # 306, GLENDALE, CA. 91205
TEL: (818) 500-3968 , FAX: (818) 548-8108

RCB ENGINEERING
450 North Brand Blvd. # 600
Glendale, CA 91205
TEL: (818) 813-1852

REVISION	BY

OWNER
VANIK MANOOKI
1725 MELWOOD DRIVE
GLENDALE CA 91207

PROJECT
3 UNITS CONDOMINIUM
421 SALEM STREET
GLENDALE CA 91203

DRAWING TITLE
SITE PLAN

REGISTERED PROFESSIONAL ENGINEER
PATRICK BARATT
S 5900
EXP. 09.30.21
STRUCTURAL
STATE OF CALIFORNIA

DATE:	JAN 2020
SCALE:	1/8"=1'-0"
DRAWN:	A.M.
APPROVED:	
JOB:	2019-21
SHEET:	A-1
OF	SHEETS

ROOFING SPECIFICATION				
NUMBER PER PLAN	MFR	COLOR	MATERIAL	MODEL
1	GAF TIMBERLINE	CHARCOAL COOL	FIBERGLASS ASPHALT CONSTRUCTION	ASPHALT SHINGLES

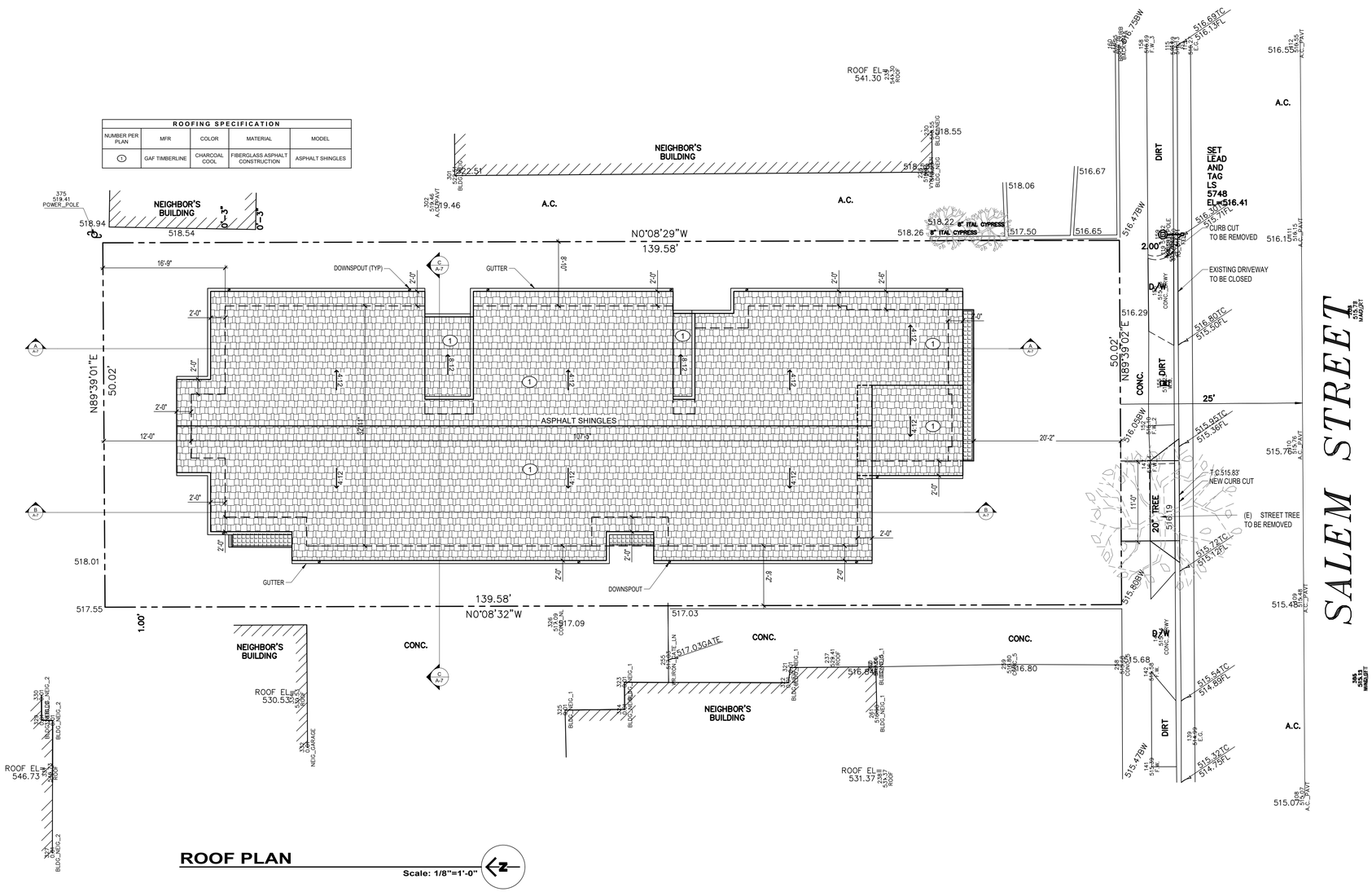

ROOF PLAN

Scale: 1/8"=1'-0"

DOMUS DESIGN
109 E. HARVARD ST., # 306, GLENDALE CA 91205
TEL: (818) 500-3966 FAX: (818) 548-8108

RCB ENGINEERING
450 North Brand Blvd. # 600
Glendale, CA 91205
TEL: (818) 813-1852

REVISION	BY

OWNER
VANIK MANOOKI
1725 MELWOOD DRIVE
GLENDALE CA 91207

PROJECT
3 UNITS CONDOMINIUM
421 SALEM STREET
GLENDALE CA 91203

DRAWING TITLE
ROOF PLAN

REGISTERED PROFESSIONAL ENGINEER
PATRICK BARATT
S 5900
EXP. 09.30.21
STRUCTURAL
STATE OF CALIFORNIA

DATE:	3/17/2020
SCALE:	1/8"=1'-0"
DRAWN:	A.M.
APPROVED:	
JOB:	2019-21
SHEET:	A-2
OF	SHEETS

LEGEND	
SYMBOL	DESCRIPTION
	CONCRETE BLOCK WALL
	SHOTCRETE WALL

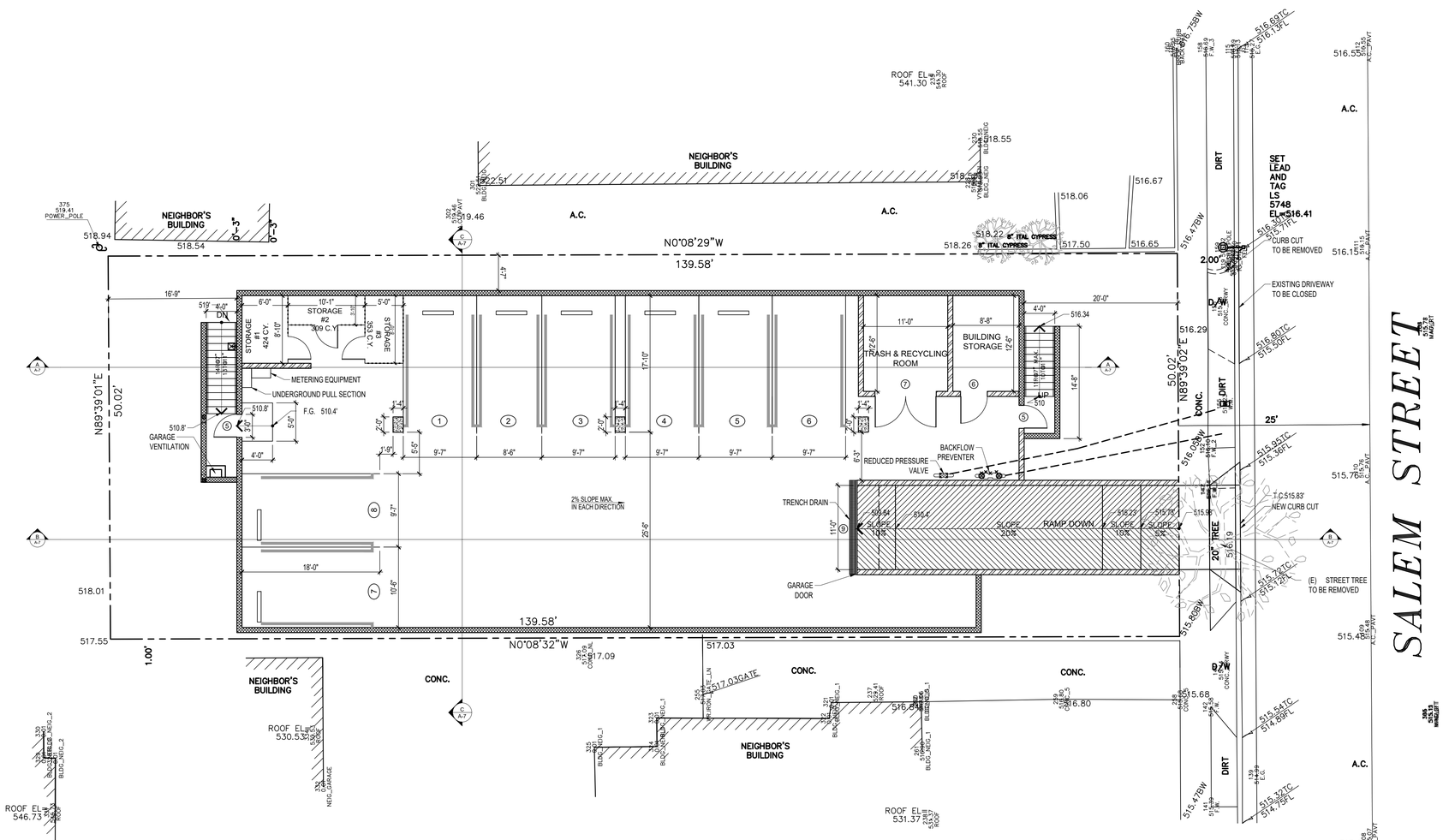

GARAGE PLAN

Scale: 1/8"=1'-0"

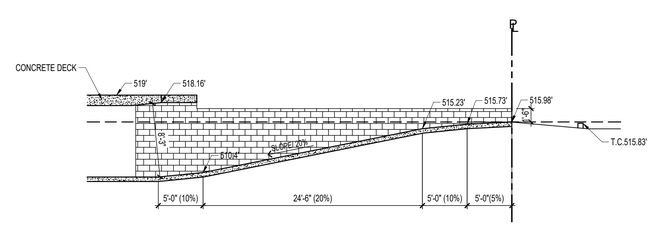

SECTION THRU DRIVEWAY

Scale: 1/8"=1'-0"

DOMUS DESIGN
109 E. HARVARD ST., # 306, GLENDALE, CA 91205
TEL: (818) 500-3966 FAX: (818) 548-8108

RCB ENGINEERING
450 North Brand Blvd. # 600
Glendale, CA 91205
TEL: (818) 813-1852

REVISION	BY

OWNER
VANIK MANOOKI
1725 MELWOOD DRIVE
GLENDALE CA 91207

PROJECT
3 UNITS CONDOMINIUM
421 SALEM STREET
GLENDALE CA 91203

DRAWING TITLE
GARAGE FLOOR PLAN

REGISTERED PROFESSIONAL ENGINEER
PATRICK BARATY
S 5900
EXP. 09.30.21
STRUCTURAL
STATE OF CALIFORNIA

DATE:	3/17/2020
SCALE:	1/8"=1'-0"
DRAWN:	A.M.
APPROVED:	
JOB:	2019-21
SHEET:	A-3
OF	SHEETS

WINDOW SCHEDULE															
WINDOW NUMBER	WIDTHXHEIGHT	MATERIAL	OPERATION	GLASS	FRAME TYPE	EXTERNAL GRID	EDGE DETAIL	BEDROOM	ENERGY EFFICIENT	TEMPERED GLASS	FIRE HAZARD ZONE	18" OF FLOOR OR 40" OF DOOR	U-FACTOR	SHGC	REMARKS
A	8'-0"X4'-0"	VINYL	SLIDING	DOUBLE	NAIL IN	N	N	N	Y	N	N	-	0.32	0.25	
B	4'-0"X3'-2"	VINYL	SILIDING	DOUBLE	NAIL IN	N	N	N	Y	N	N	-	0.32	0.25	
C	6'-0"X4'-0"	VINYL	SILIDING	DOUBLE	NAIL IN	N	N	N	Y	N	N	-	0.32	0.25	
D	5'-0"X4'-0"	VINYL	SILIDING	DOUBLE	NAIL IN	N	N	N	Y	N	N	-	0.32	0.25	
E	6'-0"X4'-0"	VINYL	SLIDING/FIX	DOUBLE	NAIL IN	N	N	Y	Y	N	N	-	0.32	0.25	
F	8'-0"X4'-0"	VINYL	SLIDING/FIX	DOUBLE	NAIL IN	N	N	Y	Y	N	N	-	0.32	0.25	
G	1'-8"X3'-0"	VINYL	SINGLE HUNG	DOUBLE	NAIL IN	N	N	N	Y	N	N	-	0.32	0.25	
H	2'-6"X3'-0"	VINYL	SINGLE HUNG	DOUBLE	NAIL IN	N	N	N	Y	N	N	-	0.32	0.25	
I	4'-0"X2'-0"	VINYL	SILIDING	DOUBLE	NAIL IN	N	N	N	Y	N	N	-	0.32	0.25	

DOOR SCHEDULE									
MARK	CORE	WIDTH	HEIGHT	THK	TYPE	MATERIAL	FINISH	HARDWARE	REMARKS
1	S	4'-6" (3'+18")	6'-8"	1 ¾"	SWINGING	WOOD	PAINT	LEVER TYPE	-
2		2X4'-0"	6'-8"	1 ¾"	SLIDING	FIBERGLASS/GLASS	VINYL	LEVER TYPE	
3		2X3'-0"	6'-8"	1 ¼"	SLIDING	FIBERGLASS/GLASS	VINYL	LEVER TYPE	-
4	S	2'-8"	6'-8"	1 ¼"	SWINGING	WOOD	PAINT	LEVER TYPE	-
5	S	3'-0"	6'-8"	1 ¼"	SLIDING	WOOD	PAINT	LEVER TYPE	-
6	S	3'-6"	6'-8"	1 ¼"	SLIDING	WOOD	PAINT	LEVER TYPE	-
7	S	2X4'-0"	6'-8"	1 ¼"	SWINGING	METAL	PAINT	LEVER TYPE	-
8		3'-0"	6'-0"	1 ¼"	SWINGING	METAL	PAINT		
7		3'-0"	6'-8"	1 ¼"	SWINGING	METAL	PAINT		
9		11'-0"	8'-0"	1 ¼"	OVERHEAD	METAL	PAINT		

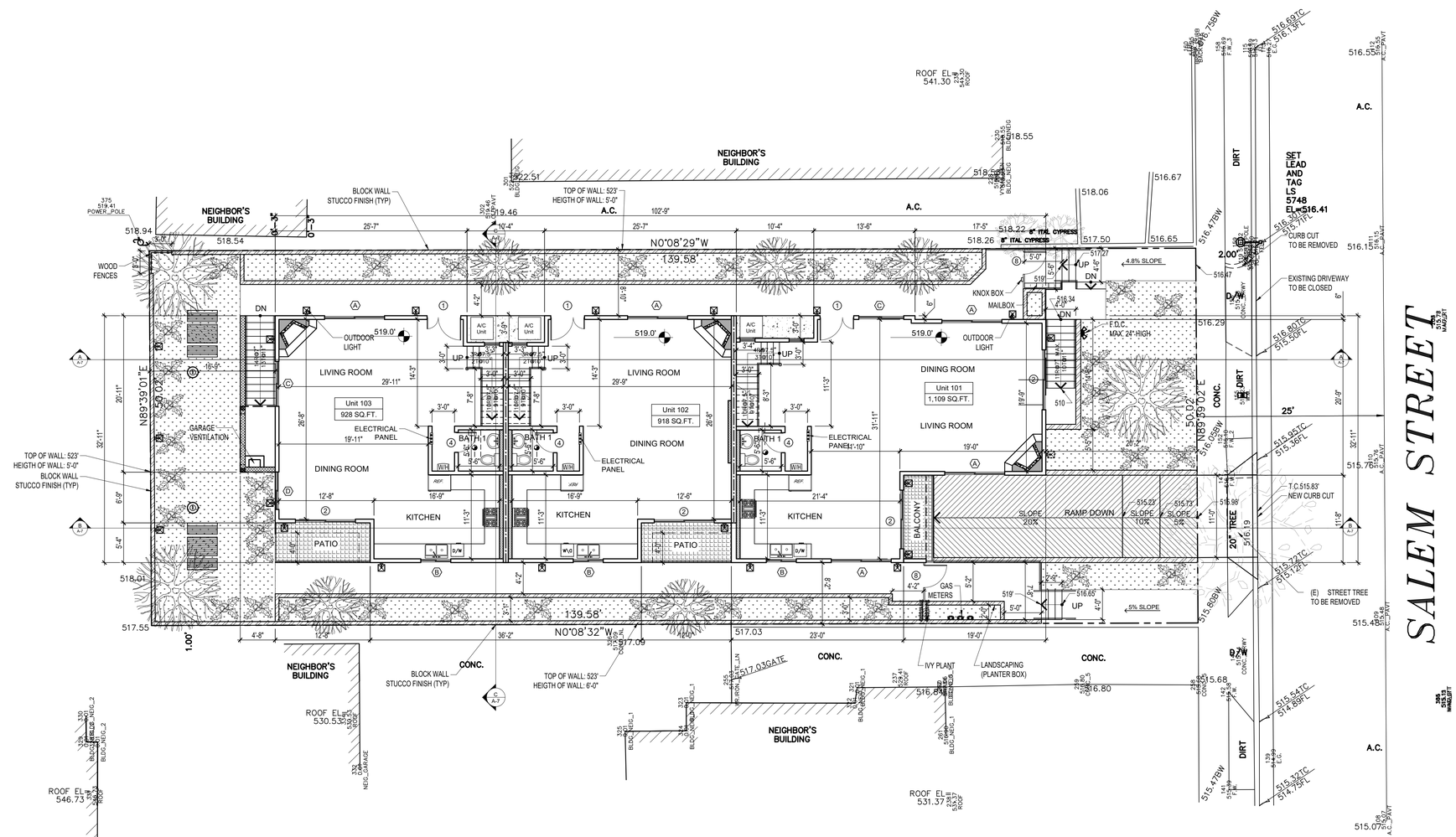

FIRST FLOOR PLAN

Scale: 1/8"=1'-0"

LEGEND	
SYMBOL	DESCRIPTION
	1-HR RATED DEMISING WALL
	CONCRETE BLOCK WALL
	"ENERGY STAR" RATED MECHANICAL FAN UP TO TO ROOF, MIN. 5 AIR CHANGES, WITH HUMIDISTAT

DOMUS DESIGN
109 E. HARVARD ST. # 306, GLENDALE, CA. 91205
TEL: (818) 500-3968 FAX: (818) 548-8108

RCB ENGINEERING
450 North Brand Blvd. # 600
Glendale, CA 91205
TEL: (818) 813-1852

REVISION	BY

OWNER
VANIK MANOOKI
1725 MELWOOD DRIVE
GLENDALE CA 91207

PROJECT
3 UNITS CONDOMINIUM
421 SALEM STREET
GLENDALE CA 91203

DRAWING TITLE
FIRST FLOOR PLAN

REGISTERED PROFESSIONAL ENGINEER
PATRICK BARATY
S 5900
EXP. 09.30.21
STRUCTURAL
STATE OF CALIFORNIA

DATE:	JAN 2020
SCALE:	1/8"=1'-0"
DRAWN:	A.M.
APPROVED:	
JOB:	2019-21
SHEET:	A-4
OF	SHEETS

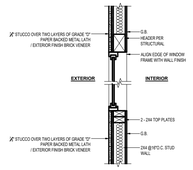

1 TYPICAL VERTICAL SECTION THRU WINDOW — Scale N.T.S

LEGEND	
SYMBOL	DESCRIPTION
	1-HR RATED DEMISING WALL
SD	SMOKE DETECTOR W/ BATTERY BACK-UP
SD/CO	SMOKE DETECTOR / CARBON MONOXIDE DETECTOR COMBO
	"ENERGY STAR" RATED MECHANICAL FAN UP TO TO ROOF, MIN. 5 AIR CHANGES, WITH HUMIDISTAT

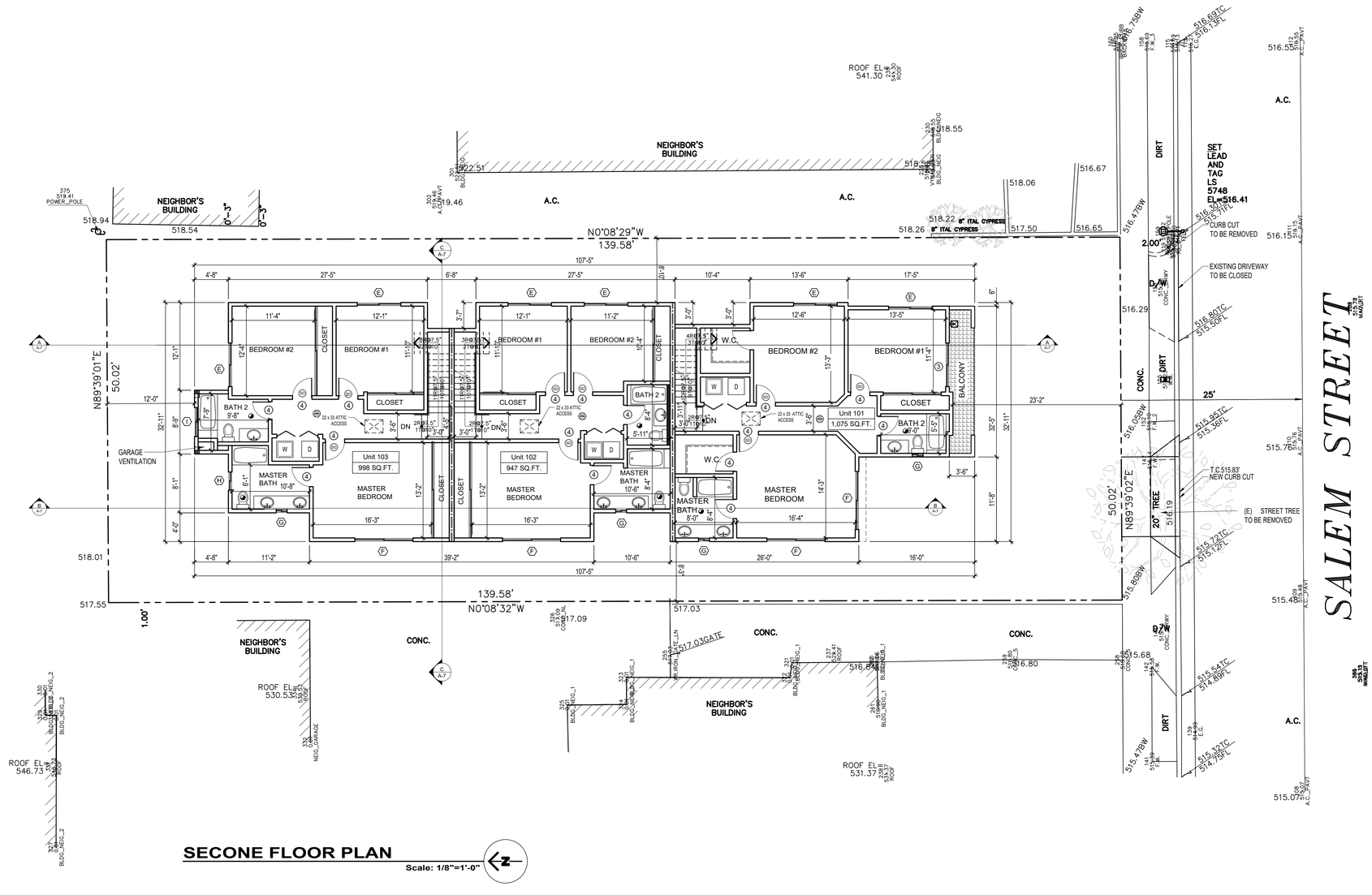

SECONE FLOOR PLAN

Scale: 1/8"=1'-0"

DOMUS DESIGN
109 E. HARVARD ST., # 306, GLENDALE, CA. 91205
TEL: (818) 500-3968 FAX: (818) 548-8108

RCB ENGINEERING
450 North Brand Blvd. # 600
Glendale, CA 91205
TEL: (818) 813-1852

REVISION	BY

OWNER
VANIK MANOOKI
1725 MELWOOD DRIVE
GLENDALE CA 91207

PROJECT
3 UNITS CONDOMINIUM
421 SALEM STREET
GLENDALE CA 91203

DRAWING TITLE
SECOND FLOOR PLAN

REGISTERED PROFESSIONAL ENGINEER PATRICK BARATY S 5900 EXP. 09.30.21 STRUCTURAL STATE OF CALIFORNIA

DATE:	JAN 2020
SCALE:	1/8"=1'-0"
DRAWN:	A.M.
APPROVED:	
JOB:	2019-21
SHEET:	A-5
OF	SHEETS

ELEVATION KEYNOTES

1. LA HABRA STUCCO. COLOR X-215 MESA VERDA BASE 200 OR B LIGHT GRAIN FINISH

2. 2½" X 8" SCULPYURED BRICK VENEER – EAGLE BUFF BY CORONADO

3. CHARCOAL COOL SHINGLE, CRC PROCUCT ID# 0676-0142 BY GAF TIMBERLINE MANUFATURER

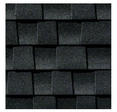

4. DUNN-EDWARDS PAINTS: DE6362 STORM CLOUD

5. SECURITY GATE & RAILING. PAINTED DUNN-EDWARDS PAINTS: DET699

6. MILGARD TRINSIC SERIES IN BRONZE COLOR

7. SHOTCRETE CONCRETE

8. OUTDOOR 450 LUMEN 2700K SECURITY LANTERNS BY FEIT ELECTRIC

EAST ELEVATION

Scale: 1/8"=1'-0"

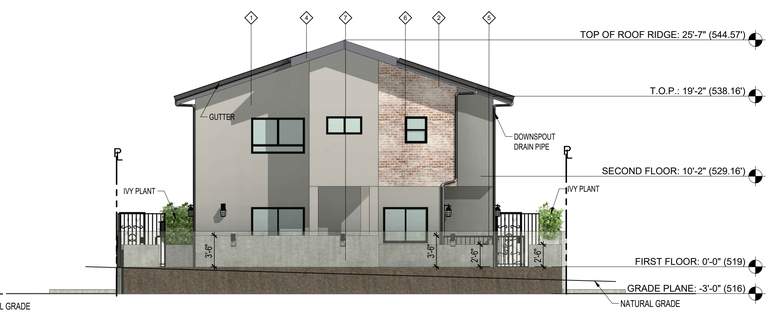

NORTH ELEVATION

Scale: 1/8"=1'-0"

WEST ELEVATION

Scale: 1/8"=1'-0"

SOUTH ELEVATION

Scale: 1/8"=1'-0"

DOMUS DESIGN
109 E. HARVARD ST., # 306, GLENDALE, CA 91205
TEL: (818) 500-3968 FAX: (818) 548-8108

RCB ENGINEERING
450 North Brand Blvd. # 600
Glendale, CA 91205
TEL: (818) 813-1852

REVISION	BY

OWNER
VANIK MANOOKI
1725 MELWOOD DRIVE
GLENDALE CA 91207

PROJECT
3 UNITS CONDOMINIUM
421 SALEM STREET
GLENDALE CA 91203

DRAWING TITLE
ELEVATION PLANS

REGISTERED PROFESSIONAL ENGINEER
PATRICK BARATY
S 5900
EXP. 09.30.21
STRUCTURAL
STATE OF CALIFORNIA

DATE:	JAN 2020
SCALE:	1/8"=1'-0"
DRAWN:	A.M.
APPROVED:	
JOB:	2019-21
SHEET:	A-6
OF	SHEETS

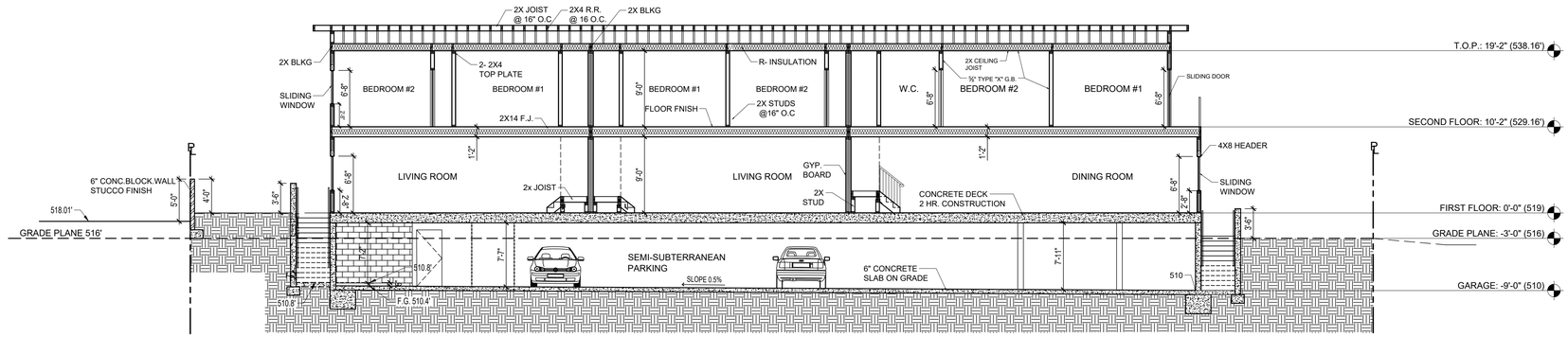

SECTION "A"

Scale: 1/8"=1'-0"

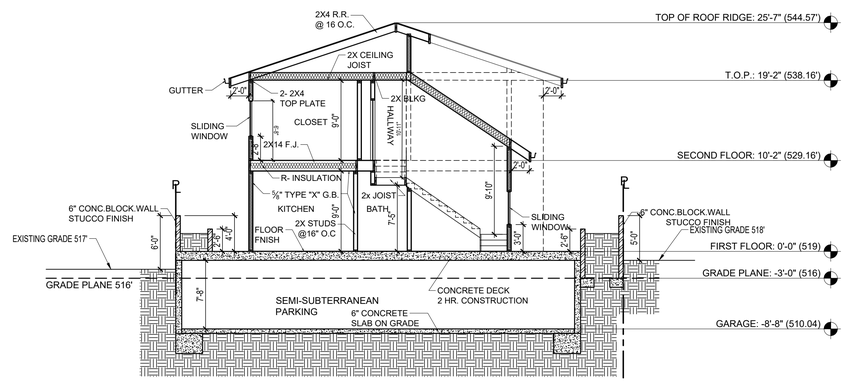

SECTION "C"

Scale: 1/8"=1'-0"

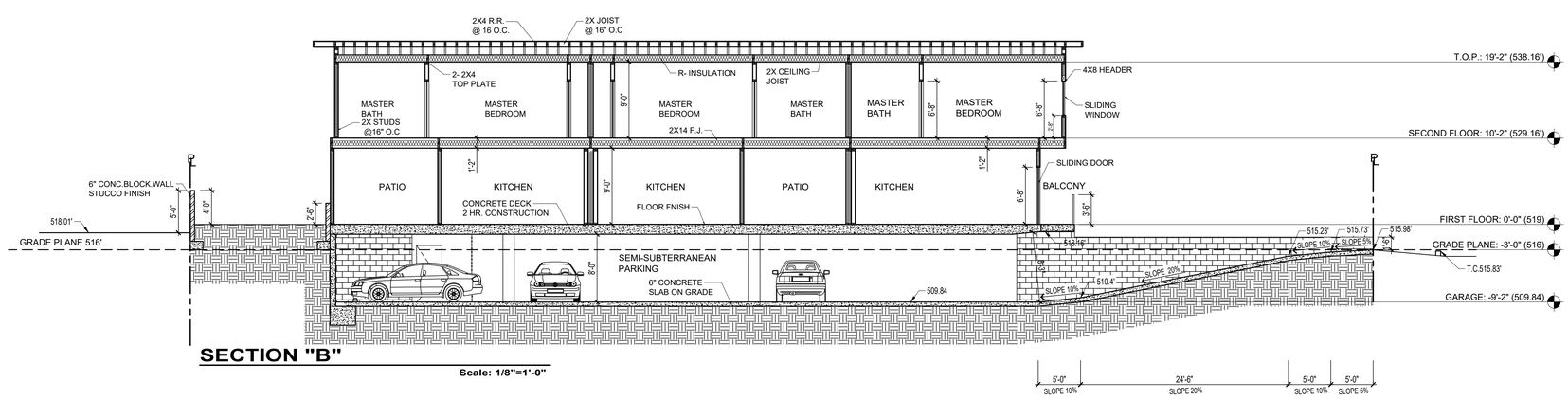

SECTION "B"

Scale: 1/8"=1'-0"

DOMUS DESIGN
109 E. HARVARD ST., # 306, GLENDALE, CA. 91205
TEL: (818) 500-3966 FAX: (818) 548-8108

RCB ENGINEERING
450 North Brand Blvd. # 600
Glendale, CA 91205
TEL: (818) 813-1852

REVISION	BY

OWNER
VANIK MANOOKI
1725 MELWOOD DRIVE
GLENDALE CA 91207

PROJECT
3 UNITS CONDOMINIUM
421 SALEM STREET
GLENDALE CA 91203

DRAWING TITLE
SECTION PLANS

REGISTERED PROFESSIONAL ENGINEER
PATRICK BARATY
S 5900
EXP. 09.30.21
STRUCTURAL
STATE OF CALIFORNIA

DATE:	3/17/2020
SCALE:	1/8"=1'-0"
DRAWN:	A.M.
APPROVED:	
JOB:	2019-21
SHEET:	A-7
OF	SHEETS

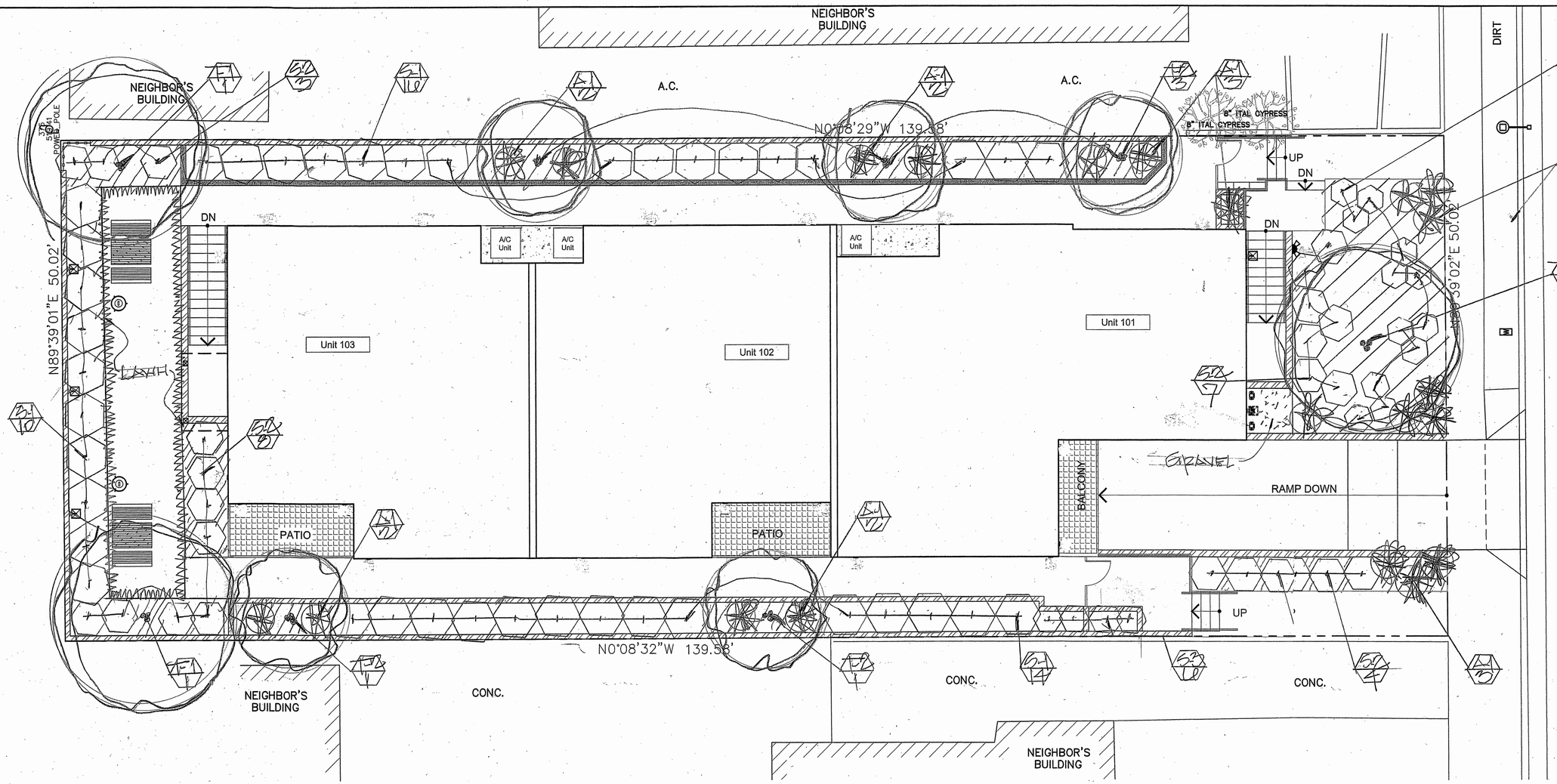

LANDSCAPE AREA = 1,766 SQ. FT.

LANDSCAPING PLAN

Scale: 3/16"=1'-0"

WATER USEAGE (HIGH, LOW)

PLANT LIST

	SYMBOL	BOTANICAL NAME	COMMON NAME	SIZE	QTY.	SPACING
LW	T-1	OLEA EUROPA 'SWAN HILL'	FRUITLESS OLIVE	36"BX	3	-
LW	T-2	HETERONELES ARBUTIFOLIA	TOYON - WHITE	24"BX	5	-
LW	S-1	DODONAEA VISCOSA	HOPSEED BUSH	5GAL	40	5' O.C.
LW	S-2	ALYOGYNE HUEGELII	BLUE HIBISCUS	5GAL	22	4' O.C.
LW	S-3	AGAVE 'BLUE FLAME'	BLUE FLAME AGAVE	5GAL	18	3' O.C.
LW	A-1	DIETES BICOLOR	FORTNIGHT LILY	5GAL	120	RANDOM
MW	LAWN	BUCHLOE DACTLOIDES	BUFFALO GRASS	SOD	-	-
LW	GROUNDCOVER: (ALL P.A.'S)	BACCHARIS 'TWIN-PEAKS	COYOTE BRUSH	FLATS	AS NEEDED	18" O.C.

LW = LOW WATER USEAGE/P.F. .3
MW = MODERATE WATER USEAGE/P.F. .5

LEGEND

- PROPOSED TREE
- PROPOSED SHRUB
- PROPOSED ACCENT
- PROPOSED GROUMDCOVER
- PLANT SYMBOL / QUANTITY

A MINIMUM 3 INCH LAYER OF MULCH SHALL BE APPLIED ON ALL EXPOSED SOIL SURFACES OF PLANTING AREAS; EXCEPT FOR TURF AREAS, CREEPING OR ROOTING GROUNDCOVERS, OR DIRECT SEEDING. APPLICATIONS WHERE MULCH IS CONTRADICTED. FOR SOILS LESS THAT 6% ORGANIC MATTER IN THE TOP 6"OF SOIL, COMPOST AT RATE OF A MINIMUM OF 4 CUBIC YARDS SOIL PER 1,000 SQUARE FEET OF PERMEABLE AREA SHALL BE INCORPORATED TO A DEPTH OF 6" INTO THE SOIL.

MWELLO COMPLIANCE

I HAVE COMPLIED WITH THE CRITERIA OF THE CALIFORNIA MODEL WATER EFFICIENT LANDSCAPE ORDINANCE AND APPLIED THEM FOR THE EFFICIENT USE OF WATER IN THE LANDSCAPE DESIGN PLAN.

LICENSED LANDSCAPE ARCHITECT — LARRY G. TISON — CALIFORNIA

Registered Landscape Architect — Date

LARRY G. TISON & ASSOCIATES
LARRY G. TISON, A.S.L.A.
LANDSCAPE ARCHITECTURE
314 E. BROADWAY, SUITE D, GLENDALE, CALIFORNIA 91205
818-241-9169

DOMUS DESIGN
109 E. HARVARD ST. # 306, GLENDALE, CA 91205
TEL: (818) 500-3966 FAX: (818) 548-8108

REVISION	BY

OWNER
VANIK MANOOKI
1725 MELWOOD DRIVE
GLENDALE CA 91207

PROJECT
3 UNITS CONDOMINIUM
421 SALEM STREET
GLENDALE CA 91203

DRAWING TITLE
LANDSCAPING PLAN

DATE: JAN 2020
SCALE: 3/16"=1'-0"
DRAWN: LGT
APPROVED: RL
JOB: 2019-21
SHEET: L-1 OF SHEETS

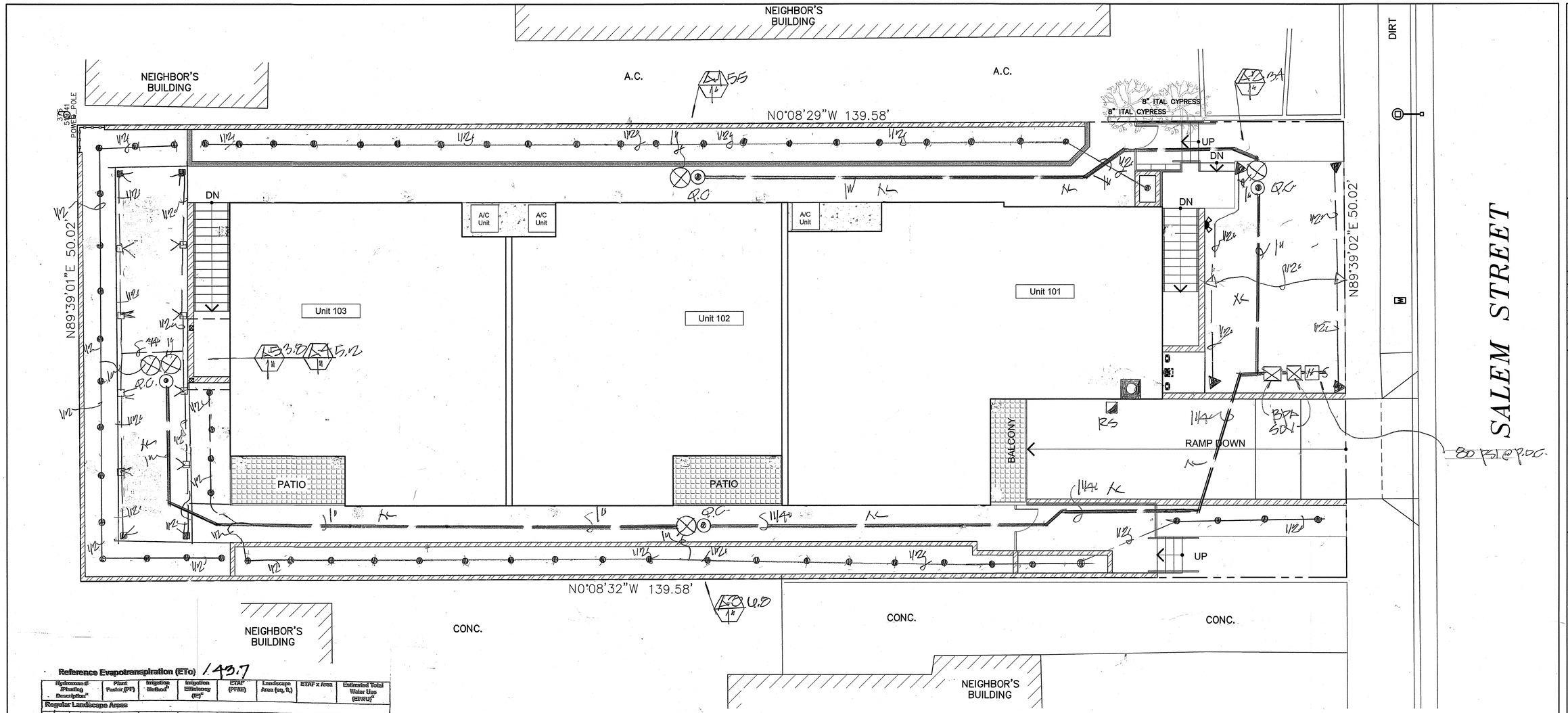

Reference Evapotranspiration (ETo) 143.7

Hydrozone #/Planting Description[a]	Plant Factor (PF)	Irrigation Method[b]	Irrigation Efficiency (IE)[c]	ETAF (PF/IE)	Landscape Area (sq. ft.)	ETAF x Area	Estimated Total Water Use (ETWU)[d]
Regular Landscape Areas							
A-1-W	.3	B	.81	.37	7487	2769	23,489
A-2-W	.3	B	.75	.4	2100	840	7,098
A-3-W	.3	B	.81	.37	400	148	1,210
A-4-W	.5	B	.75	.66	2138	1410	11,960
A-5-W	.3	B	.81	.37	230	85.1	1,200
			Totals		12,601 (A)	5305 (B)	44,957
Special Landscape Areas					(.45)		
[redacted]			1				
[redacted]			1				
[redacted]			1				
[redacted]			1				
[redacted]			1				
			Totals		(C)	(D)	
						ETWU Total	44,957
						Maximum Allowed Water Allowance (MAWA)[e]	87,752

[a] Hydrozone #/Planting Description E.g
1.) front lawn
2.) low water use plantings
3.) medium water use plantings

[b] Irrigation Method
overhead spray or drip

[c] Irrigation Efficiency
0.75 for spray head
0.81 for drip

[d] ETWU (Annual Gallons Required) = Eto x 0.62 x ETAF x Area
where 0.62 is a conversion factor that converts acre-inches per acre per year to gallons per square foot per year.

[e] MAWA (Annual Gallons Allowed) = (Eto) (0.62) [(ETAF x LA) + ((1-ETAF) x SLA)]
where 0.62 is a conversion factor that converts acre-inches per acre per year to gallons per square foot per year, LA is the total landscape area in square feet, SLA is the total special landscape area in square feet, and ETAF is .55 for residential areas and 0.45 for non-residential areas.

(143.7)(0.62)(.55)(12,601)+(0)

MAWA = 87,752 GPY
ETWU = 44,957 GPY

SPRINKLER HEADS

SYMBOL	DESCRIPTION	MODEL NO.	GPM	RADIUS	PSI
	RAINBIRD POP-UP/DRIP	1812-PVAN-13.90°	.43	16'	30
	" " "/LINE	1812-PVAN-13.90°	.85	16'	30
	" " "/DRIP	1806-SQNPR	.20	8'	30
	" " "/LINE	1806-SHNPR	.52	8'	30
	" " BUBBLER	1812-1401	.25	–	30

IRRIGATION PLAN

Scale: 3/16"=1'-0"

LEGEND

- WEATHER BASED CONTROLLER (RAINBIRD ESP-LXME 8 STATION)
- RS — RAIN SENSOR (RAINBIRD RSD_BEX)
- BFP — BACKFLOW PREVENTER (FEBCO 825-Y-1½")
- Q.C — QUICK COUPLER (RAINBIRD 44LC)
- VALVE (RAINBIRD PEB SERIES)
- 12.0 — VALVE NO. / GPH
- VALVE SIZE
- MAINLINE / SCHD. 40 PVC.
- LATERAL LINE / SCHD. 40 PVC
- SOV — SHUT-OFF VALVE
- IRRIGATION METER

CHECK VALVES OR ANTI-DRAIN VALVES ARE REQUIRED ON ALL SPRINKLER HEADS WHERE LOW POINT DRAINAGE CAN OCCUR.
MANUAL SHUTT-OFF VALVES SHALL BE REQUIRED; AS CLOSE AS POSSIBLE TO THE POINT OF CONNECTION TO THE WATER SUPPLY. TO MINIMIZE WATER LOSS IN CASE OF EMERGENCY OR ROUTINE REPAIR.
PRESSURE REGULATING DEVICES ARE REQUIRED IF WATER PRESSURE IS BELOW OR EXCEEDS THE RECOMMENDED PRESSURE OF THE SPECIFIED IRRIGATION DEVICES.
A DIAGRAM OF THE IRRIGATION PLAN; SHOWING HYDROZONES SHALL BE KEPT WITH THE IRRIGATION CONTROLLER FOR SUBSEQUENT MANAGEMENT PURPOSES.
A CERTIFICATION OF COMPLETION SHALL BE FILLED OUT AND CERTIFIED BY EITHER DESIGNER OF THE LANDSCAPE PLANS, IRRIGATION PLANS OR THE LICENSED LANDSCAPE CONTRACTOR FOR THE PROJECT.
AN IRRIGATION AUDIT REPORT SHALL BE COMPLETED AT THE TIME OF INSPECTION.
AT THE TIME OF THE FINAL INSPECTION; THE PERMIT APPLICANT MUST PROVIDE THE OWNER OF THE PROPERTY WITH A CERTIFICATE OF COMPLETION, CERTIFICATION OF INSTALLATION, IRRIGATION SCHEDULE OF LANDSCAPE AND IRRIGATION MAINTENANCE.
RECIRCULATING WATER SYSTEMS SHALL BE USED FOR WATER FEATURES.

LICENSED LANDSCAPE ARCHITECT — LARRY G. TISON — STATE OF CALIFORNIA

#1844

LARRY G. TISON & ASSOCIATES
LARRY G. TISON, A.S.L.A.
LANDSCAPE ARCHITECTURE
314 E. BROADWAY, SUITE D, GLENDALE, CALIFORNIA 91205
818-241-9169

DOMUS DESIGN
109 E. HARVARD ST. # 306, GLENDALE, CA 91205
TEL: (818) 500-3966 FAX: (818) 548-8108

REVISION	BY

OWNER
VANIK MANOOKI
1725 MELWOOD DRIVE
GLENDALE CA 91207

PROJECT
3 UNITS CONDOMINIUM
421 SALEM STREET
GLENDALE CA 91203

DRAWING TITLE
IRRIGATION PLAN

DATE: JAN 2020
SCALE: 3/16"=1'-0"
DRAWN: LGT
APPROVED: BL.
JOB: 2019-21
SHEET: L-2
OF SHEETS

Pipe & wire trenching

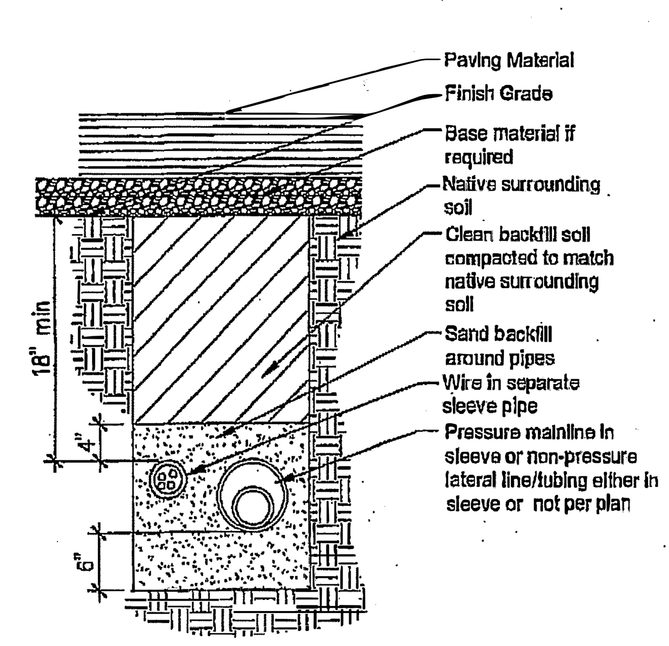

Quick coupling valve

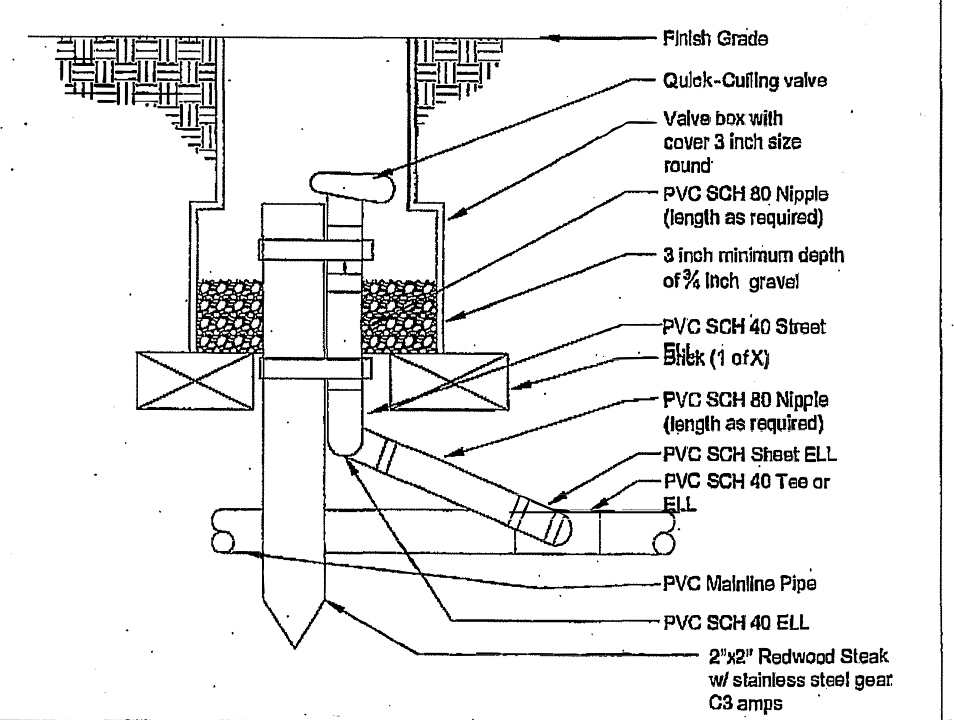

Tree Root barriers

Note:

A typical surround planting using the deeproot preformed planter

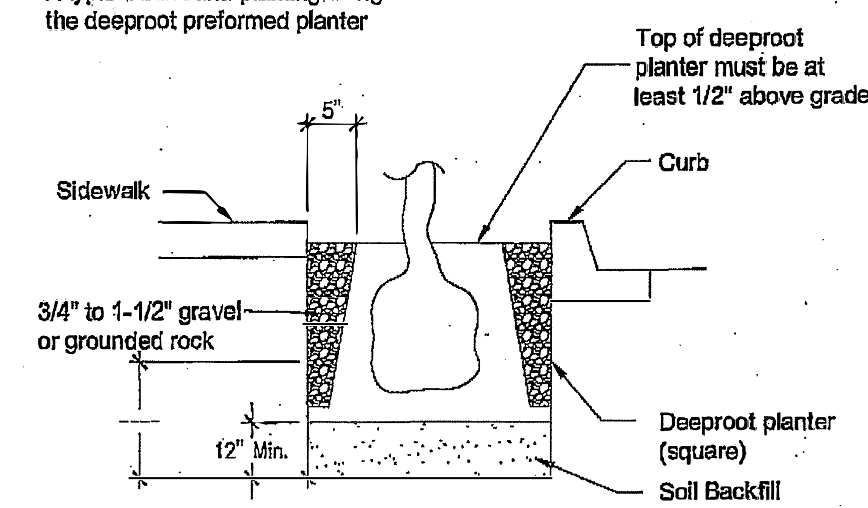

Vine Planting detail

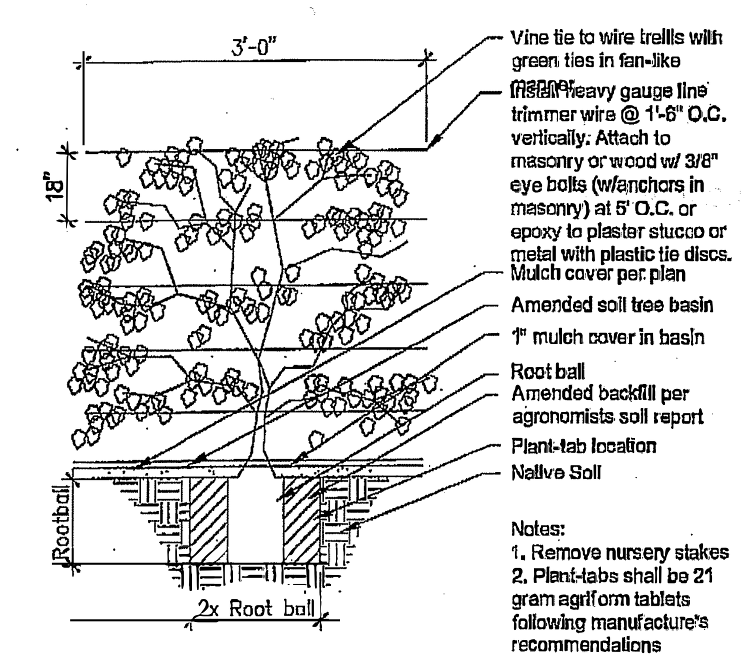

Landscape Notes

1. Contractor shall verify plant count for bidding purposes.
2. Ground cover indicated by shall be continuous under shrub.
3. Planting areas which have no cover indicated shall receive 3" min. fine redwood bark as a ground cover.
4. Contractor shall guarantee plant material for 90 days after installation and replace any diseased or damaged materials during that one year period.
5. The following amendments shall be uniformally broadcast and thoroughly incorporate to a depth of 12" min. by rotoriller equal amount per. 1,000 sq.ft.
6. Cu. yd. (2") nitrogen stabilized organic amendment from redwood sawdust, fir dust, or finely ground bark 5 lbs. ammonium sulfate.

Note: This formula is a Std. mix and will change if there are any unusual soil conditions at the site. Compacted backfill shall be 100% on site soil.

Soil characteristics

Soil Texture	Maximum rate inch per hour							
	Cover	Bare	Cover	Bare	Cover	Bare	Cover	Bare
Course Sandy Soil	2.00	2.00	2.00	1.50	1.50	1.00	1.00	0.50
Course sandy soil over compact lawn	1.75	1.50	1.25	1.50	1.00	0.75	0.75	0.40
Light Sandy	1.75	1.00	1.25	0.80	1.00	0.80	0.75	0.40
Light Sandy compacted subsoil	1.25	0.75	1.00	0.50	0.75	0.40	0.50	0.30
Uniform Soft	1.00	0.50	0.80	0.40	0.50	0.30	0.40	0.20
Light over compact soil	0.50	0.30	0.50	0.25	0.40	0.15	0.30	0.10
Light clay over	0.20	0.15	0.15	0.10	0.12	0.05	0.10	0.05

POP-UP SPRAY SPRINKLER

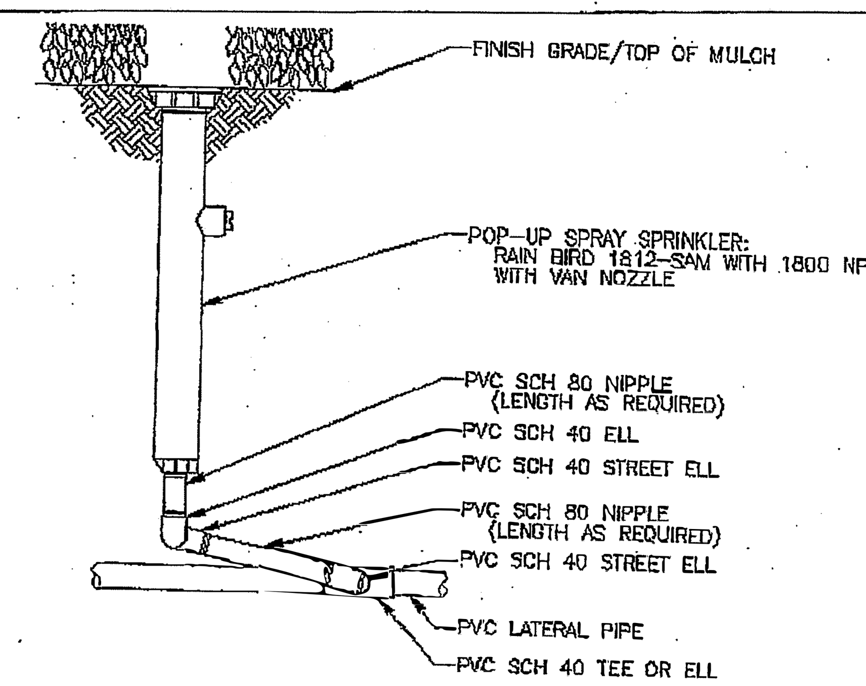

Backflow preventer

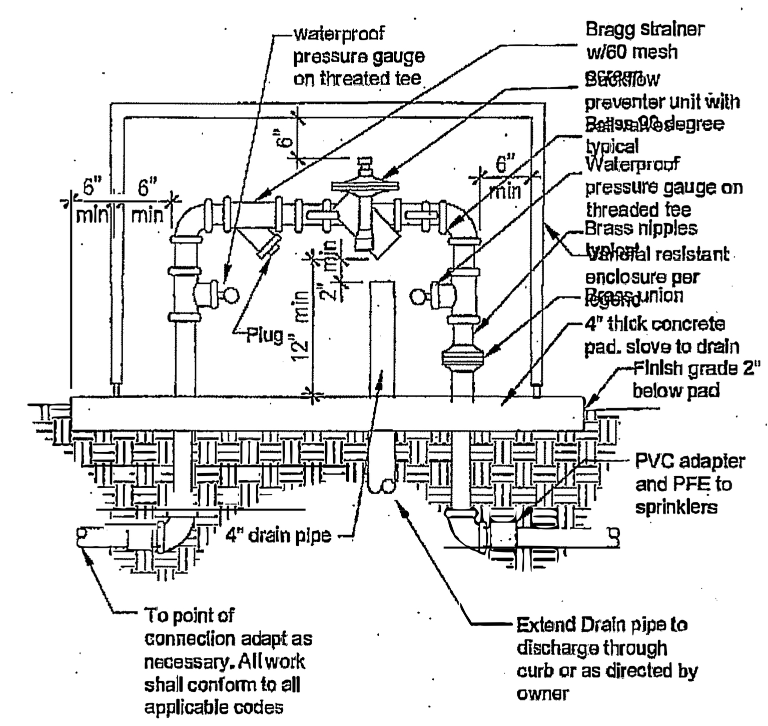

Ground Cover planting detail

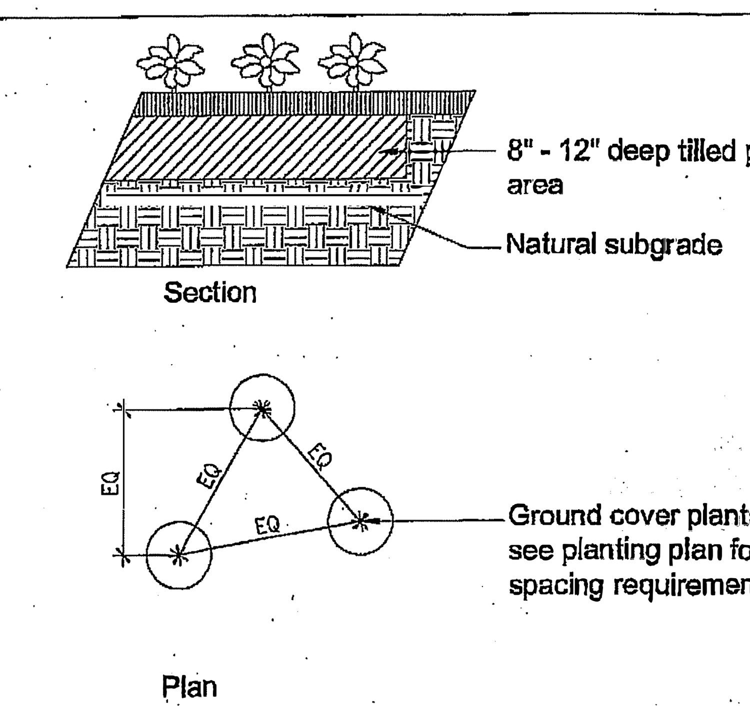

Irrigation notes

1. All irrigation lines under drives to be installed in pvc sleeve @ 18" depth min.
2. Locate all RCV's and HB's in planting areas. (typ.)
3. Jet all lines and trenches under paving 90% min.
4. Install remote control valve in ametex 12" box or equal (one valve per box) & marked "irrigation", located boxes in ground cover areas whenever possible and a min. 12": from paving or curbs.
5. The contractor shall provide owner with a completely operation system and clean set of marked prints as "as-built" drawing. Reference all trenches with dimensions to nearest building or paving.
6. The contractor shall warrant that the system will be a free from defects of workmanship and materials for a period of one year. All repairs necessary shall be made at no cost to the owner.

Note: All other requirements to be per city standards and specifications.

BACKFLOW PREVENTION DEVICES SCREENING REQUIREMENTS 2-1/2" AND SMALLER

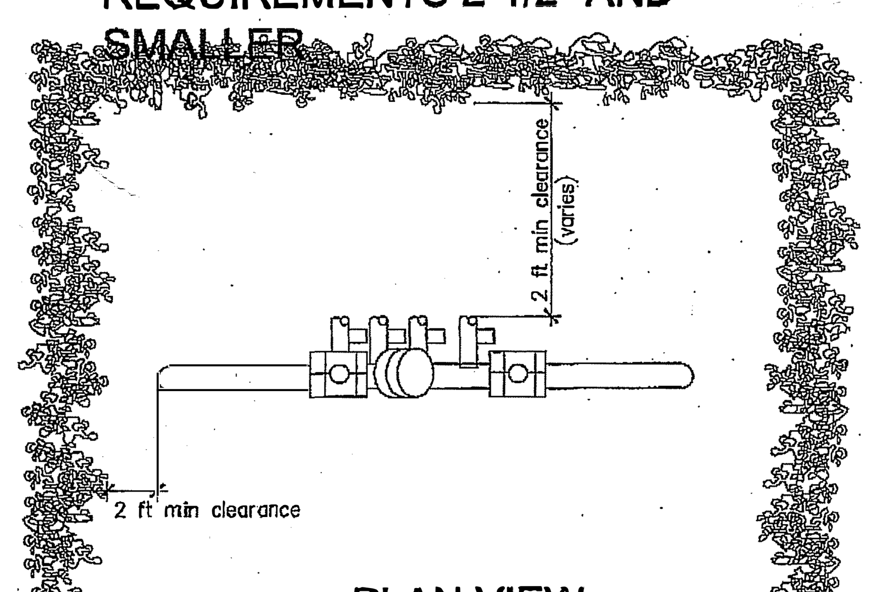

PLAN VIEW

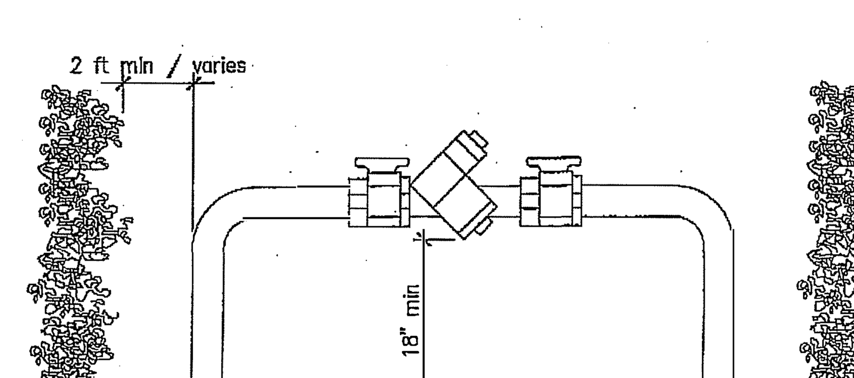

ELEVATION

BACKFLOW DEVICE DETAIL

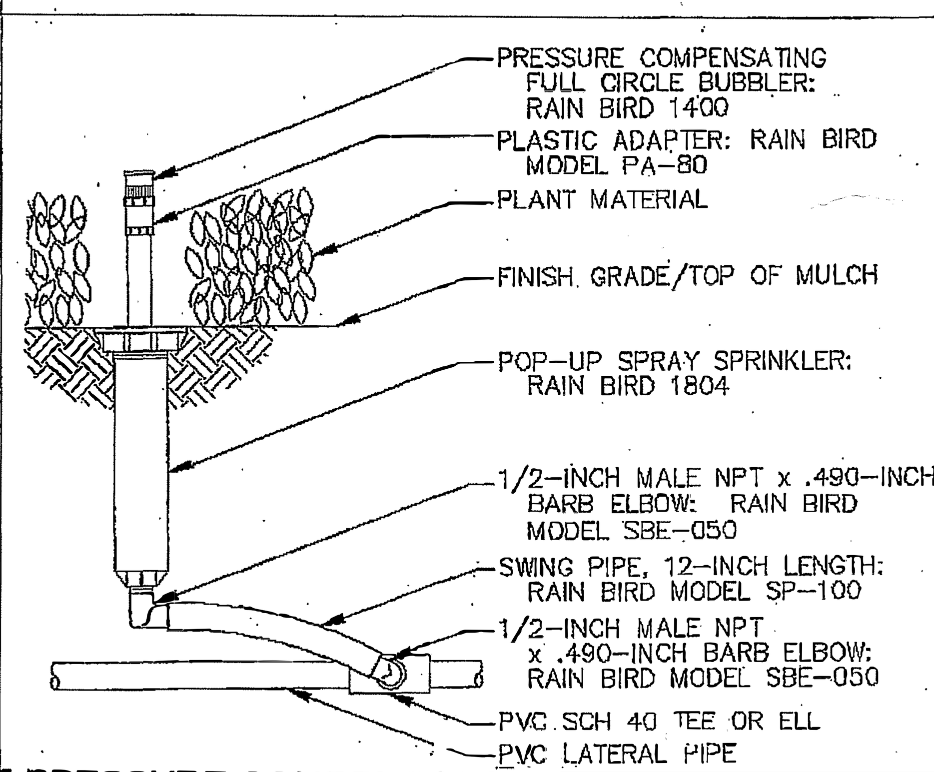

PRESSURE COMPENSATING FULL-CIRCLE BUBBLER

Note:
1. Dripline of tree shall be enclosed w/ a 4'-0" high fence, fence fabric to be durable and bright color, stake to be stell, size and installed to be depth of 12" min.
2. Any trenching required within the dripline of the tree shall be hand dub. Any roots cut over 2" shall be sealed w/ black enamel paint.

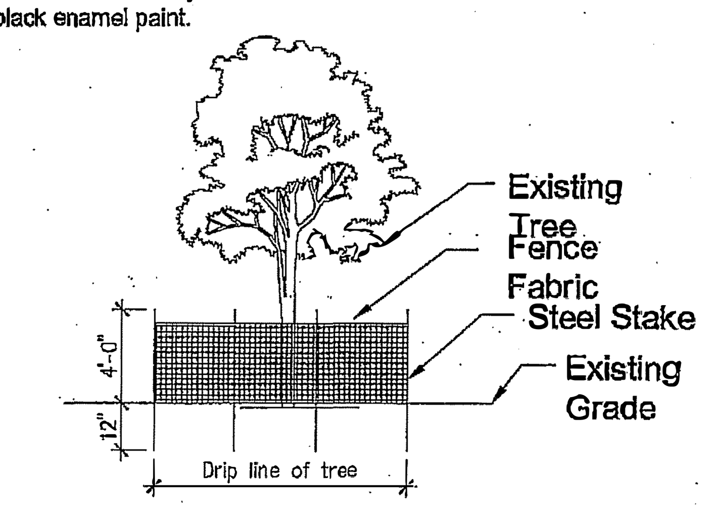

Protection of Existing Tree

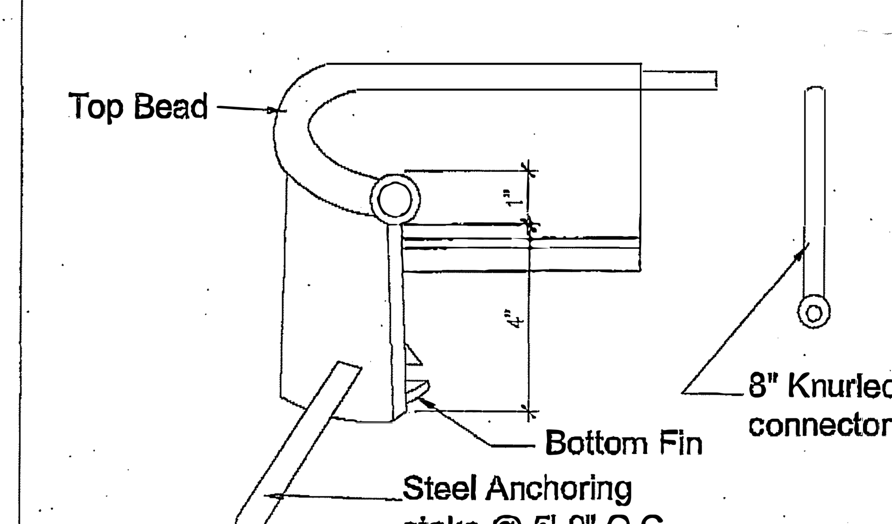

Polyethylene edging

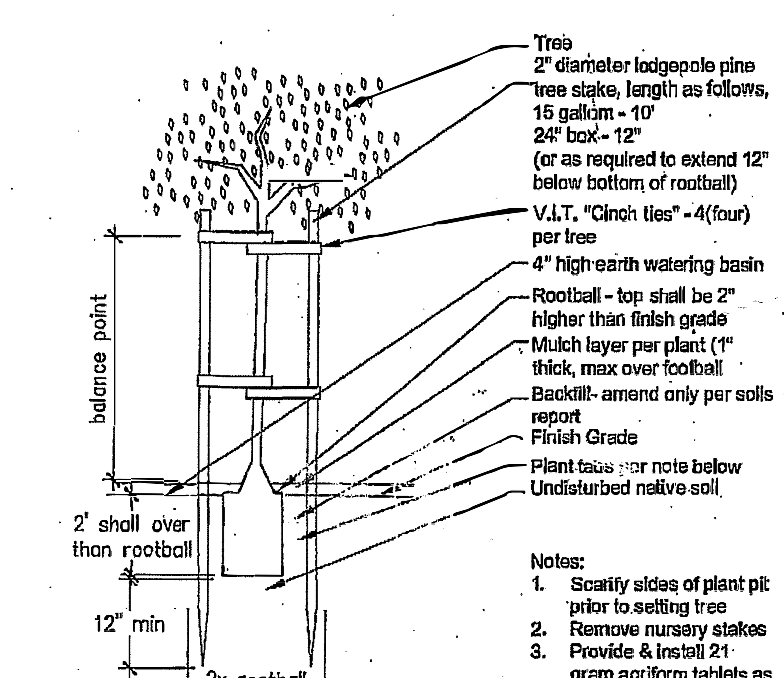

Notes:
1. Scarify sides of plant pit prior to setting tree
2. Remove nursery stakes
3. Provide & install 21 gram agriform tablets as per manufacture specs
4. Stake tree perpendicular to prevailing wind.

Tree staking detail

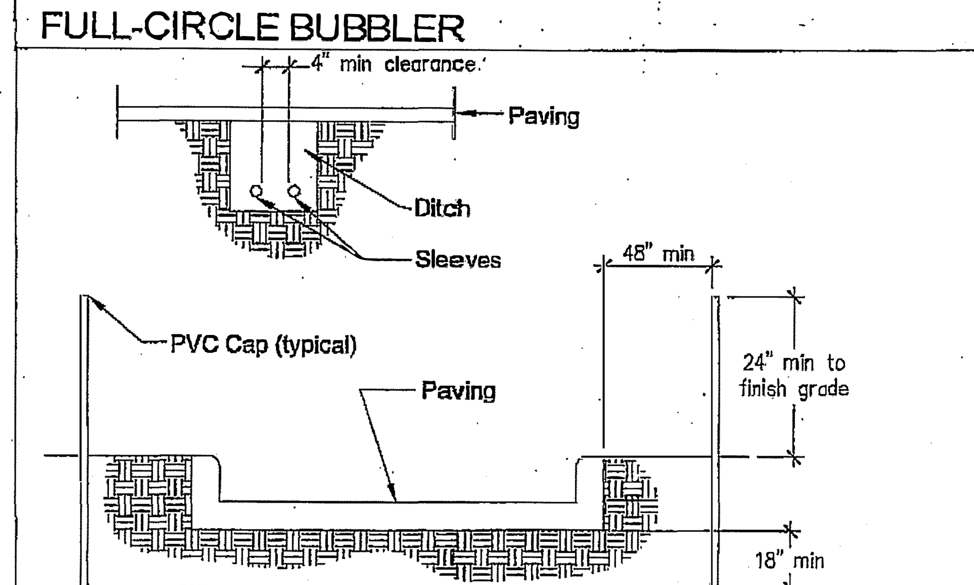

Notes:
1. All PVC irrigation sleeves to be class 200 pipe
2. All joints to be solvent welded and watertight
3. Where there is more than one sleeve, extend the smaller sleeve to 24-inches minumum above finish grade
4. Mechanically temp to 95% compaction.

Sleeving

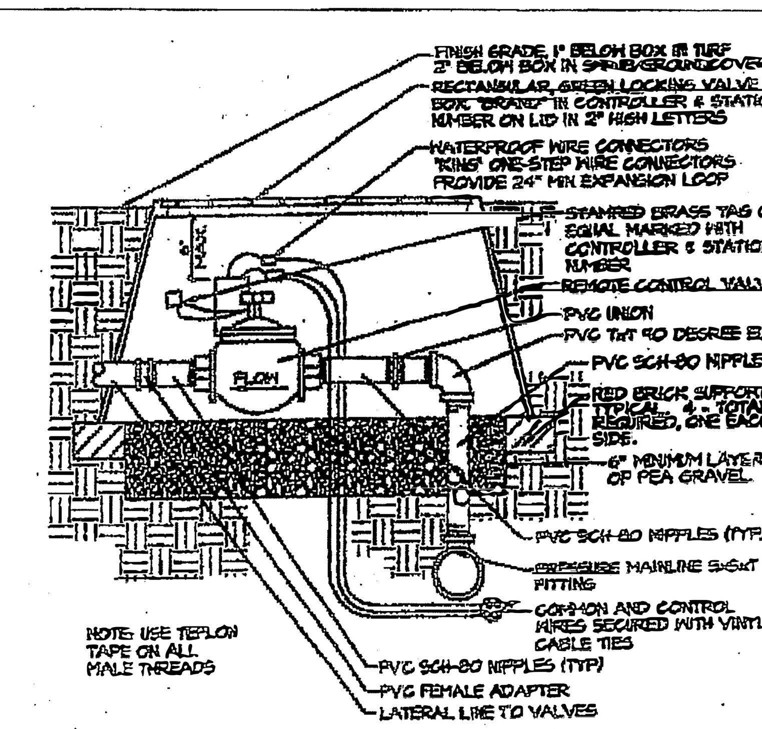

REMOTE CONTROL VALVE

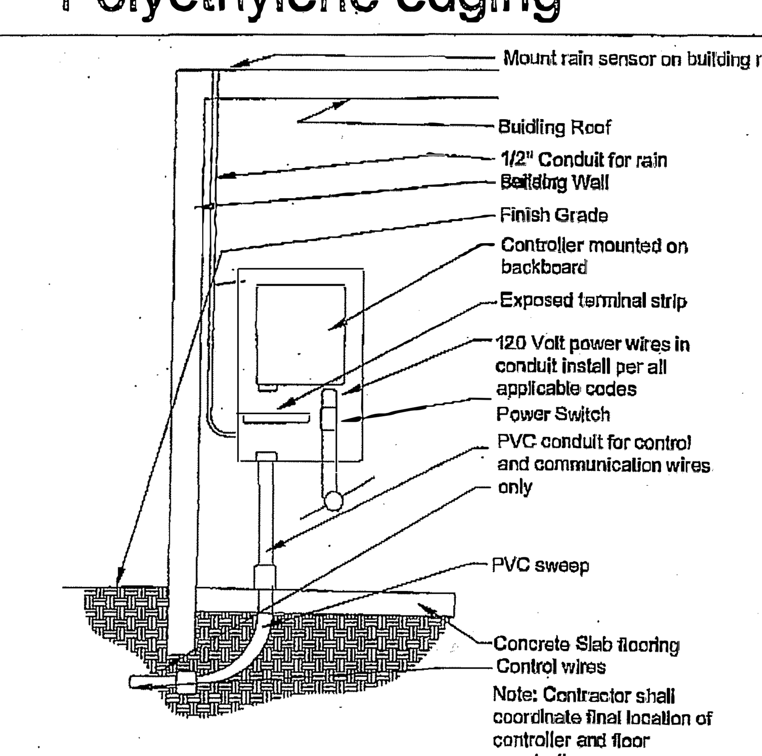

Solid-state Controller

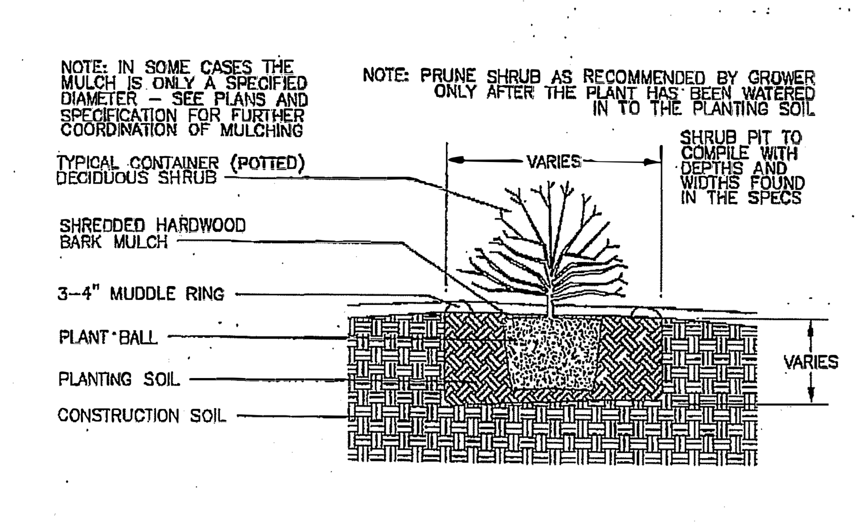

CONTANER SHRUB PLANTING DETAIL

Revisions

THE DRAWING AND SPECIFICATIONS ARE THE PROPERTY AND COPYRIGHT OF THE DESIGNER AND SHALL NOT BE USED ON ANY OTHER WORK EXCEPT BY WRITTEN AGREEMENT WITH THE DESIGNER.

WRITTEN DIMENSIONS SHALL BE VERIFIED ON THE JOB SITE. DISCREPANCIES SHALL BE BROUGHT TO THE ATTENTION OF THE DESIGNER PRIOR TO THE COMMENCEMENT OF ANY WORK

Note:
use details as applicable to this project only.

Larry G. Tison & Associates
Larry G. Tison A.S.L.A.
LANDSCAPE ARCHITECTURE
314 E. Broadway Suite O Glendale, California 91205
818-241-9169
Larrytison@gmail.com

LANDSCAPE DETAIL & SPECIFICATION PLAN

LICENSED LANDSCAPE ARCHITECT
STATE OF CALIFORNIA

DRAWN:	CHECKED:
LGT	

DATE: –

JOB NO.: –

SHEET

L-3

SOUTH - WEST VIEW

EAST VIEW

SOUTH-WEST NIGHT VIEW

DOMUS DESIGN
109 E. HARVARD ST., # 306, GLENDALE, CA. 91205
TEL: (818) 500-3968, FAX: (818) 548-8108

RCB ENGINEERING
450 North Brand Blvd. # 600
Glendale, CA 91205
TEL: (818) 813-1852

REVISION	BY

OWNER
VANIK MANOOKI
1725 MELWOOD DRIVE
GLENDALE CA 91207

PROJECT
3 UNITS CONDOMINIUM
421 SALEM STREET
GLENDALE CA 91203

DRAWING TITLE
PROJECT RENDERINGS

REGISTERED PROFESSIONAL ENGINEER
PATRICK BARATY
S 5900
EXP. 09.30.21
STRUCTURAL
STATE OF CALIFORNIA

DATE:	JAN 2020
SCALE:	N.T.S.
DRAWN:	A.M.
APPROVED:	
JOB:	2019-21
SHEET:	R-1
OF	SHEETS