APPENDIX F

Traffic Study

Traffic, Transportation, and Parking Consultants
750 N. Glendale Ave.
Glendale, CA 91206
JanoBaghdanian@gmail.com
Ph: 818-694-2880
Fax: 818-888-4541

GUSD Apartments

Traffic Impact Analysis

City of Glendale, CA

August 9, 2018

Prepared by:

Jano Baghdanian, P.E., T.E., PTOE
Jano Baghdanian & Associates
Traffic, Transportation & Parking Consultants

Table of Contents

1.0 INTRODUCTION 1

2.0 PROJECT LOCATION AND SITE DESCRIPTION 2

2.1 Project Location 2

2.2 Project Characteristics 2

3.0 SITE ACCESS AND CIRCULATION 5

3.1 Existing Site Access 5

3.2 Proposed Project Site Access 5

4.0 EXISTING SITE CONDITIONS 7

4.1 Freeway Access to Region 7

4.2 Surrounding Roadway Systems 7

4.3 Transit Service 8

5.0 EXISTING TRAFFIC VOLUMES 11

6.0 PROJECT TRAFFIC GENERATION ANALYSIS 14

6.1 Project Trip Generation Methodology 14

6.2 Project Trip Distribution & Assignment 15

6.3 Project Trip Driveway Access 15

7.0 RELATED PROJECTS & AMBIENT GROWTH 18

7.1 Trip Generation for Related Projects 18

7.2 Ambient Traffic Growth 18

8.0 METHOD OF TRAFFIC IMPACT ANALYSIS 22

8.1 Signalized Intersections 22

8.2 Non-Signalized Intersection 23

9.0 TRAFFIC IMPACT ANALYSIS FINDINGS 24

9.1 Existing Level of Service 25

9.2 Existing Plus Project Traffic Conditions 26

9.3 Future (Year 2021) Without Project Traffic Conditions 29

9.4 Future (Year 2021) With Project Traffic Conditions 32

9.5 Mitigation Measures 35

10.0 CONGESTION MANAGEMENT PROGRAM (CMP) TRAFFIC IMPACT 37

10.1 Intersections 37
10.2 Freeways 37
10.3 Transit 38
11.0 CONCLUSION/RECOMMENDATION 39

List of Figures

Figure 1: Regional Location Map 3
Figure 2: Project Site and Surrounding Uses 4
Figure 3: Proposed Site Plan 6
Figure 4: Existing Public Transit Routes 10
Figure 5: Lane Configurations at Study Intersections 12
Figure 6: Existing Turning Movement Counts (AM/PM Peak) 13
Figure 7: Project Trip Distribution 16
Figure 8: Project Trip Assignment 17
Figure 9: Map of Related Project 19
Figure 10: Existing Plus Project (AM/PM Peak) Traffic Volumes 28
Figure 11: Future (Year 2021) Without Project (AM/PM Peak) Traffic Volumes 31
Figure 12: Future (Year 2021) With Project (AM/PM Peak) Traffic Volumes 34

List of Tables

Table 1: Summary of Existing Transit Routes 9
Table 2: Project Trip Generation 14
Table 3: Related Project Trip Generation 20
Table 4: City of Glendale LOS Thresholds 22
Table 5: Existing Conditions LOS 25
Table 6: Existing Plus Project Conditions LOS 27
Table 7: Future (Year 2021) Without Project Conditions LOS 30
Table 8: Future (Year 2021) With Project Condition LOS 33
Table 9: Future (Year 2021) With Project Condition + Proposed Mitigations LOS 36

Appendices

Appendix A: Traffic Counts
Appendix B: Level of Service Calculations
Appendix C: Explanation of Level of Service Categories
Appendix D: ITE Land Use Code Details
Appendix E: Mitigated Level of Service Calculations
Appendix F: Signal Warrant Analysis

1.0 INTRODUCTION

This Traffic Impact Analysis is consistent with the traffic study guidelines as set forth by the City of Glendale and follows the requirements of the *2010 Congestion Management Program for Los Angeles County*. After a consultation with the City of Glendale Public Works Engineering Division Staff, it was determined that a total of 16 intersections would be analyzed and evaluated for potential project related traffic impacts. The method used by this traffic analysis to analyze the required intersections is the Intersection Capacity Utilization (ICU) Method. This method was used to evaluate the Level of Service (LOS) at each intersection by first determining their respective volume-to-capacity ratios.

A review was conducted of the Los Angeles County Congestion Management Program (CMP) 2010 published by the Metropolitan Transportation Authority. The study intersections and the freeway segments in the vicinity of the project were compared against the list of locations in the CMP.

The following scenarios were evaluated in this analysis:

- Existing AM and PM Peak Conditions
- Existing AM and PM Peak Conditions With Proposed Project
- Future Conditions (Year 2021) Without Project (Existing plus related projects/ambient growth)
- Future Conditions (Year 2021) With Proposed Project
- Future Conditions (Year 2021) With Proposed Project + Proposed Mitigations

The potential project related impacts were determined and any required mitigations, if necessary, are included as part of the traffic analysis.

2.0 PROJECT LOCATION AND SITE DESCRIPTION

2.1 Project Location

As illustrated in **Figure 1**, the Project site is located within the City of Glendale (the "City") on Jackson Street, between Wilson Avenue and California Avenue. Interstate 5 (I-5; Golden State Freeway), State Route (SR) 134 (Ventura Freeway), and SR 2 (Glendale Freeway) provide regional access to the Project site.

As illustrated in **Figure 2**, the Project site is bounded by Kenwood Street to the west, Jackson Street to the east, Wilson Avenue to the south, and an existing property to the north.

2.2 Project Characteristics

The Applicant is acquiring the property containing the Glendale Unified School District (GUSD) Headquarters building on the northwest corner of Jackson Street and Wilson Avenue. The Project site is located at 223 N. Jackson Street and includes 1 parcel: Assessor Parcel Number (APN) 5642-017-901. The District's Headquarters consists of two connected office buildings; a two-story former storage warehouse constructed in 1938, and a four-story office building constructed in 1971. The Headquarters also includes two single-story modular buildings used for classrooms.

The proposed Project involves removal of the existing GUSD Headquarters building and construction of a new 4-story multi-family residential building containing 192 units with a multi-level parking garage ("Project"). The Project would include a minimum of 244 parking stalls. Amenities would include 25,629 square feet of common open space including 15,659 square feet of landscaped areas.

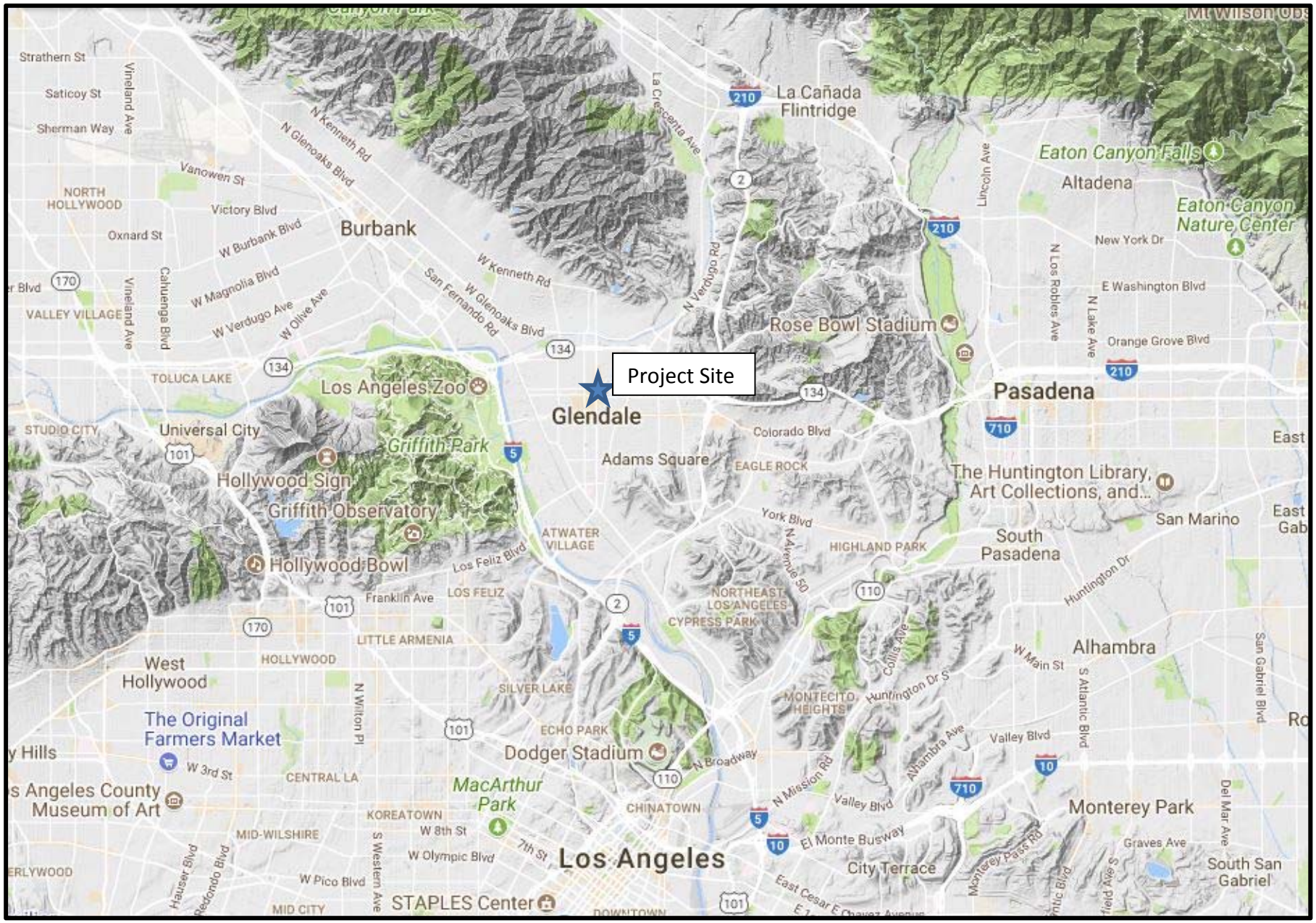

Source: Google Maps, 2017

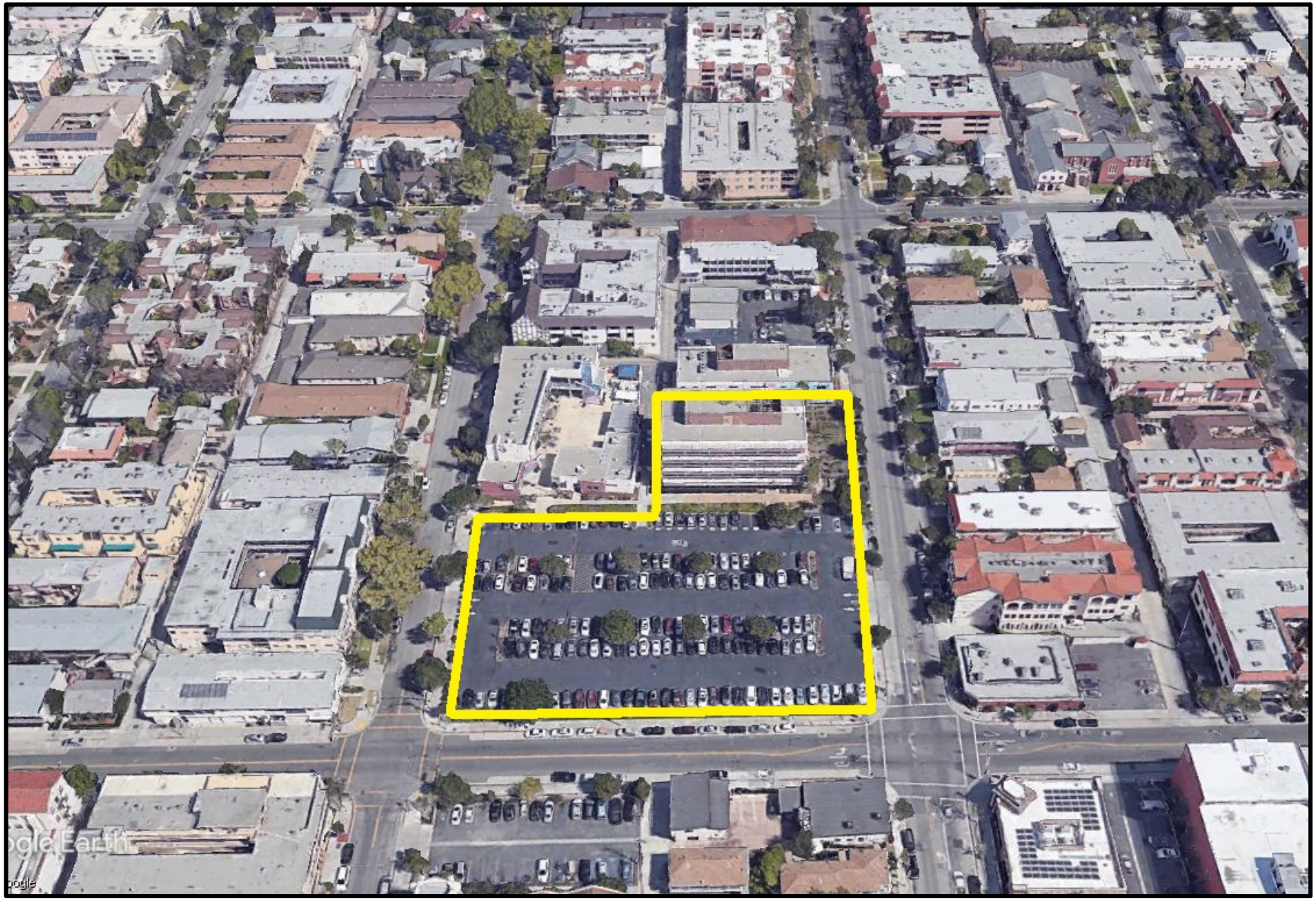

Source: Google Earth, 2017

Figure 2: Project Site & Surrounding Uses

3.0 SITE ACCESS AND CIRCULATION

3.1 Existing Site Access

Vehicular access to the existing land uses is provided through driveways on:

(1) Jackson Street
(2) Kenwood Street

3.2 Proposed Project Site Access

Please refer to **Figure 3** for an illustration of the proposed site plan. Access to/from the Project will be from the following driveway:

(1) Jackson Street Driveway: This driveway will be located on Jackson Street north of Wilson Avenue and provide access to the Project's parking structure.

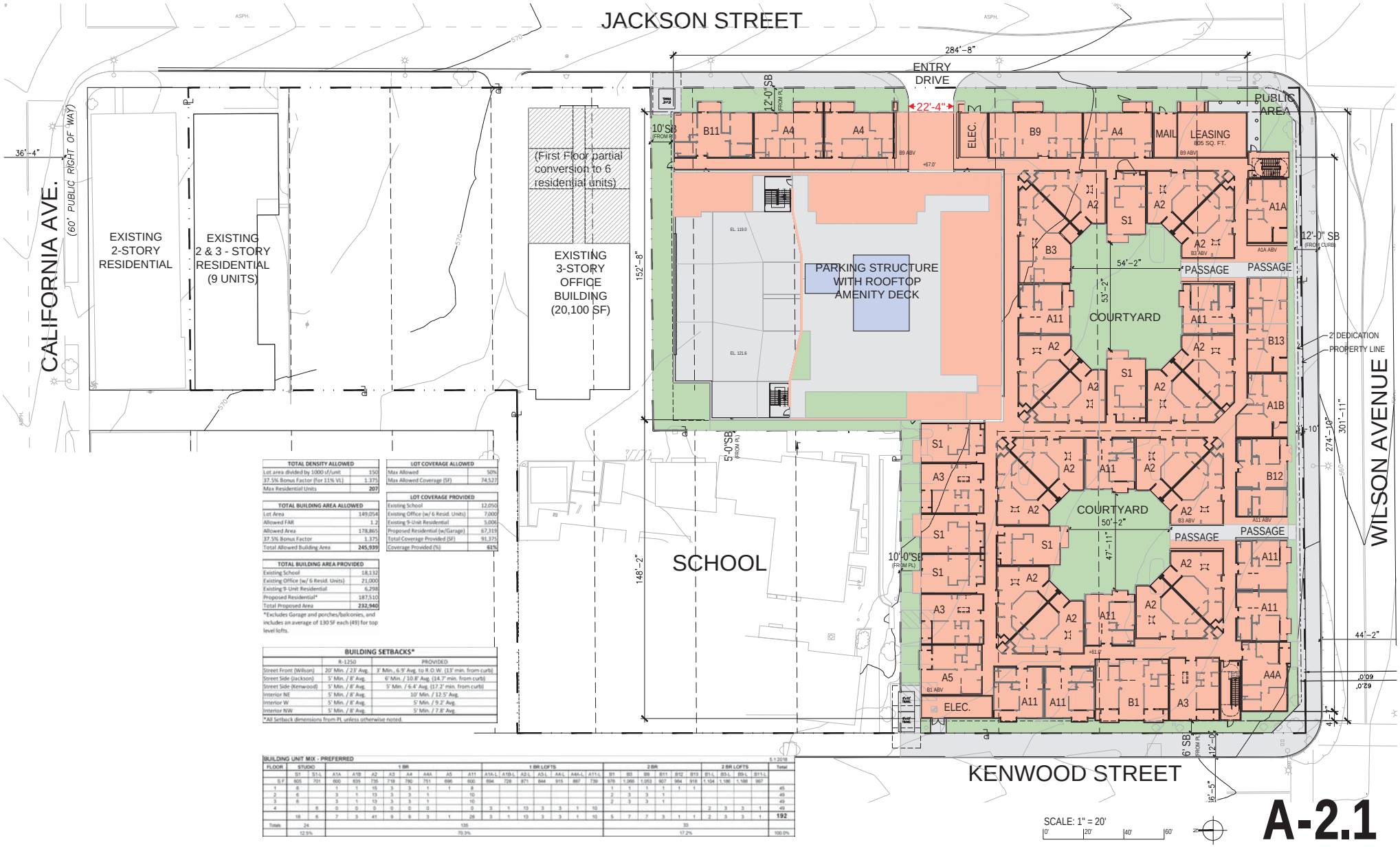

TOTAL DENSITY ALLOWED	
Lot area divided by 1000 sf/unit	150
37.5% Bonus Factor (for 11% VL)	1.375
Max Residential Units	**207**

LOT COVERAGE ALLOWED	
Max Allowed	50%
Max Allowed Coverage (SF)	74,527

TOTAL BUILDING AREA ALLOWED	
Lot Area	149,054
Allowed FAR	1.2
Allowed Area	178,865
37.5% Bonus Factor	1.375
Total Allowed Building Area	**245,939**

LOT COVERAGE PROVIDED	
Existing School	12,050
Existing Office (w/ 6 Resid. Units)	7,000
Existing 9-Unit Residential	5,006
Proposed Residential (w/Garage)	67,319
Total Coverage Provided (SF)	91,375
Coverage Provided (%)	**61%**

TOTAL BUILDING AREA PROVIDED	
Existing School	18,132
Existing Office (w/ 6 Resid. Units)	21,000
Existing 9-Unit Residential	6,298
Proposed Residential*	187,510
Total Proposed Area	**232,940**

*Excludes Garage and porches/balconies, and includes an average of 130 SF each (49) for top level lofts.

BUILDING SETBACKS*	R-1250	PROVIDED
Street Front (Wilson)	20' Min. / 23' Avg.	3' Min., 6.9' Avg. to R.O.W. (13' min. from curb)
Street Side (Jackson)	5' Min. / 8' Avg.	6' Min. / 10.8' Avg. (14.7' min. from curb)
Street Side (Kenwood)	5' Min. / 8' Avg.	5' Min. / 6.4' Avg. (17.2' min. from curb)
Interior NE	5' Min. / 8' Avg.	10' Min. / 12.5' Avg.
Interior W	5' Min. / 8' Avg.	5' Min. / 9.2' Avg.
Interior NW	5' Min. / 8' Avg.	5' Min. / 7.8' Avg.

*All Setback dimensions from PL unless otherwise noted.

BUILDING UNIT MIX - PREFERRED 5.1.2018

FLOOR	STUDIO		1 BR									1 BR LOFTS								2 BR					2 BR LOFTS				Total
	S1	S1-L	A1A	A1B	A2	A3	A4	A4A	A5	A11	A1A-L	A1B-L	A2-L	A3-L	A4-L	A4A-L	A11-L	B1	B3	B9	B11	B12	B13	B1-L	B3-L	B9-L	B11-L	
S.F.	605	701	600	635	735	718	790	751	696	600	694	728	871	844	915	887	739	976	1,066	1,053	907	984	918	1,104	1,196	1,188	997	
1	6		1	1	15	3	3	1	1	8								1	1	1	1	1	1					45
2	6		3	1	13	3	3	1		10								2	3	3	1							49
3	6		3	1	13	3	3	1		10								2	3	3	1							49
4		6	0	0	0	0	0	0		0	3	1	13	3	3	1	10							2	3	3	1	49
	18	6	7	3	41	9	9	3	1	28	3	1	13	3	3	1	10	5	7	7	3	1	1	2	3	3	1	**192**
Totals	24		135								30																	
	12.5%		70.3%								17.2%																	100.0%

SCALE: 1" = 20'

0' 20' 40' 60'

A-2.1

JACKSON STREET APARTMENTS GLENDALE, CA

CARMEL PARTNERS

PLOT PLAN

ARCHITECTS ORANGE
144 NORTH ORANGE ST. ORANGE, CA 92866 714.639.9860
#2017-340 WWW.ARCHITECTSORANGE.COM 07-16-2018

Figure 3

4.0 EXISTING SITE CONDITIONS

4.1 Freeway Access to Region

The Project area is served by three major freeways:

- **The SR-134 (Ventura) Freeway** is an east/west freeway that extends between the Interstate-210 (Foothill) Freeway in Pasadena to the US-101 (Hollywood) Freeway in North Hollywood. It is intersected by both the north/south oriented Interstate 5 (Golden State) Freeway and the SR-2 (Glendale) Freeway. The segment of the SR-134 Freeway in the Glendale area consists of four mixed-flow travel lanes and one high occupancy vehicle (HOV) lane in each direction. On/Off Ramps are provided at the following locations: San Fernando Road, Pacific Avenue, Central Avenue/Brand Boulevard, Glendale Avenue/Monterey Road, and Harvey Drive. Access to Brand Boulevard from the eastbound SR-134 Freeway is provided through Sanchez Drive (Frontage Road) while westbound freeway access from Brand Boulevard is provided by Goode Avenue (Frontage Road).

- **The I-5 (Golden State) Freeway** is a north/south freeway that extends between northern and southern California. The segment of the I-5 (Golden State) Freeway that is within the City of Glendale region primarily consists of 5 mixed-flow travel lanes in each direction. Access to and from the project by the I-5 (Golden State) Freeway is provided through its north and south on/off-ramps at the Colorado Street Freeway Extension and its interchange with the SR-134 (Ventura) Freeway.

- **The SR-2 (Glendale) Freeway** is a north/south freeway that extends between La Canada-Flintridge to the north and the City of Los Angeles to the south. The segment of the SR-2 Freeway in the Glendale area consists of four mixed-flow travel lanes in each direction. On/Off Ramps that provide access to the Project are located on Colorado Street and its intgerchange with the SR-134 (Ventura) Freeway.

4.2 Surrounding Roadway Systems

The Project area is served by the following surrounding roadways:

- **Broadway** is an east-west minor arterial south of the Project. Within the study area, Broadway consists of two lanes of traffic in each direction and intermittent parking which varies by block.

- **California Avenue** is an east-west urban collector north of the Project. Within the study area, California consists of one lane of travel in each direction. California Avenue also has parallel parking on both sides.
- **Wilson Avenue** is an east-west minor arterial that borders the Project to the south. Within the study area, Wilson Avenue consists of one lane in each direction with parking on both sides of the street and a two-way left turn lane.
- **Brand Boulevard** is a north-south major arterial west of the Project. Within the study area, Brand Boulevard consists of two lanes in each direction with angled parked on both sides. There is a raised landscaped median in the center with left-turn lanes at intersections.
- **Maryland Avenue** is a north-south urban collector west of the Project. Within the study area, Maryland Avenue consists of one lane of travel in each direction with parallel parking on both sides.
- **Louise Street** is a north-south urban collector west of the Project. Within the study area, Louise Street consists of one lane of travel in each direction with parallel parking on both sides.
- **Kenwood Street** is a north-south local street that borders the Project to the west. Within the study area, Kenwood Street has one lane of travel in each direction with parallel parking on both sides.
- **Jackson Street** is a north-south urban collector that borders the Project to the east. Within the study area, Jackson Street has one lane of travel in each direction with parallel parking on both sides.
- **Glendale Avenue** is a north-south major arterial east of the Project. Within the study area, Glendale Avenue consists of two lanes of travel in each direction with parallel parking on both sides and a two-way left turn lane.

4.3 Transit Service

The City of Glendale, and specifically the project area, is well served with regional and local public transit as well as commuter and passenger rail services. The Los Angeles County Metropolitan Transportation Authority (MTA) and the City of Glendale Bee Line Shuttle provide access to and from the project vicinity. The MTA operates within the study area primarily along Brand Boulevard and Glendale Avenue while the Bee Line Shuttle operates along Brand Boulevard, Wilson Avenue, and Broadway. Please refer to **Figure 4** and **Table 1** for an illustration of the existing public transit routes and summary of existing peak hour transit service frequencies respectively.

Table 1: Summary of Existing Transit Routes

ROUTE	ROUTE LIMITS	ROADWAY NEAR PROJECT SITE	BUSES/PEAK HOURS	
			AM	PM
MTA Routes 90/91	Downtown Los Angeles to Sylmar	Glendale Avenue	6	6
MTA Route 92	Downtown Los Angeles to San Fernando	Brand Boulevard	6	6
MTA Route 183	Glendale to Sherman Oaks	Colorado Street	2	2
Glendale Beeline Route 1	Glendale Transportation Center to Stocker Square	Brand Boulevard	6	6
Glendale Beeline Route 2	Glendale Transportation Center to Stocker Square	Brand Boulevard	6	6
Glendale Beeline Route 3	Glendale Galleria to JPL	Broadway	6	6
Glendale Beeline Route 6	Pacific Community Center & Park to Hoover High School	Colorado Street	7	7
Glendale Beeline Route 11	Glendale Transportation Center to Downtown Glendale	Brand Boulevard & Colorado Street	6	7

*Assumes AM peak hours between 7:00 AM and 9:00 AM

*Assumes PM peak hours between 4:00 PM and 6:00 PM

Source: MTA, 2016

5.0 EXISTING TRAFFIC VOLUMES

Traffic counts were obtained for vehicular turning movements at the following intersections:

1. California Ave & Brand Blvd
2. California Ave & Maryland Ave
3. California Ave & Louise St
4. California Ave & Kenwood St
5. California Ave & & Jackson St
6. Wilson Ave & Brand Blvd
7. Wilson Ave & Maryland Ave
8. Wilson Ave & Louise St
9. Wilson Ave & Kenwood St
10. Wilson Ave & & Jackson St
11. Wilson Ave & Glendale Ave
12. Broadway & Brand Blvd
13. Broadway & Maryland Ave
14. Broadway & Louise St
15. Broadway & Kenwood St
16. Broadway & & Jackson St

Traffic counts were obtained during typical commuter hours to determine peak traffic volumes. The findings show that typical peak traffic for morning and afternoon periods occur during the hours of 7:00-9:00 A.M. and 4:00 – 6:00 P.M. respectively.

Please refer to **Appendix A** for the manual traffic counts. Please also refer to **Figure 5** for a depiction of the lane configurations for the study intersections and **Figure 6** for an illustration of the AM and PM peak hour turning movement counts for the study intersections.

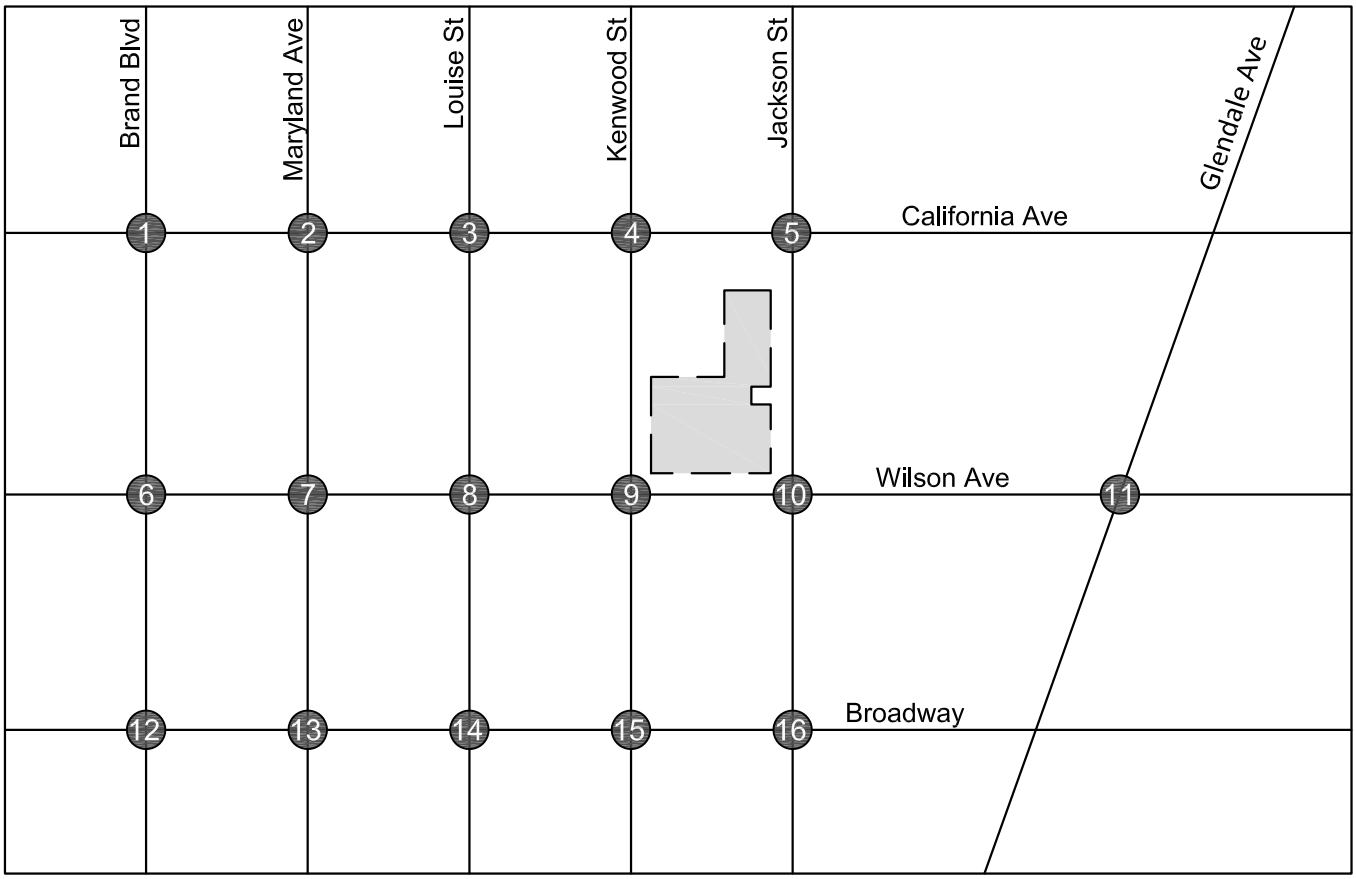

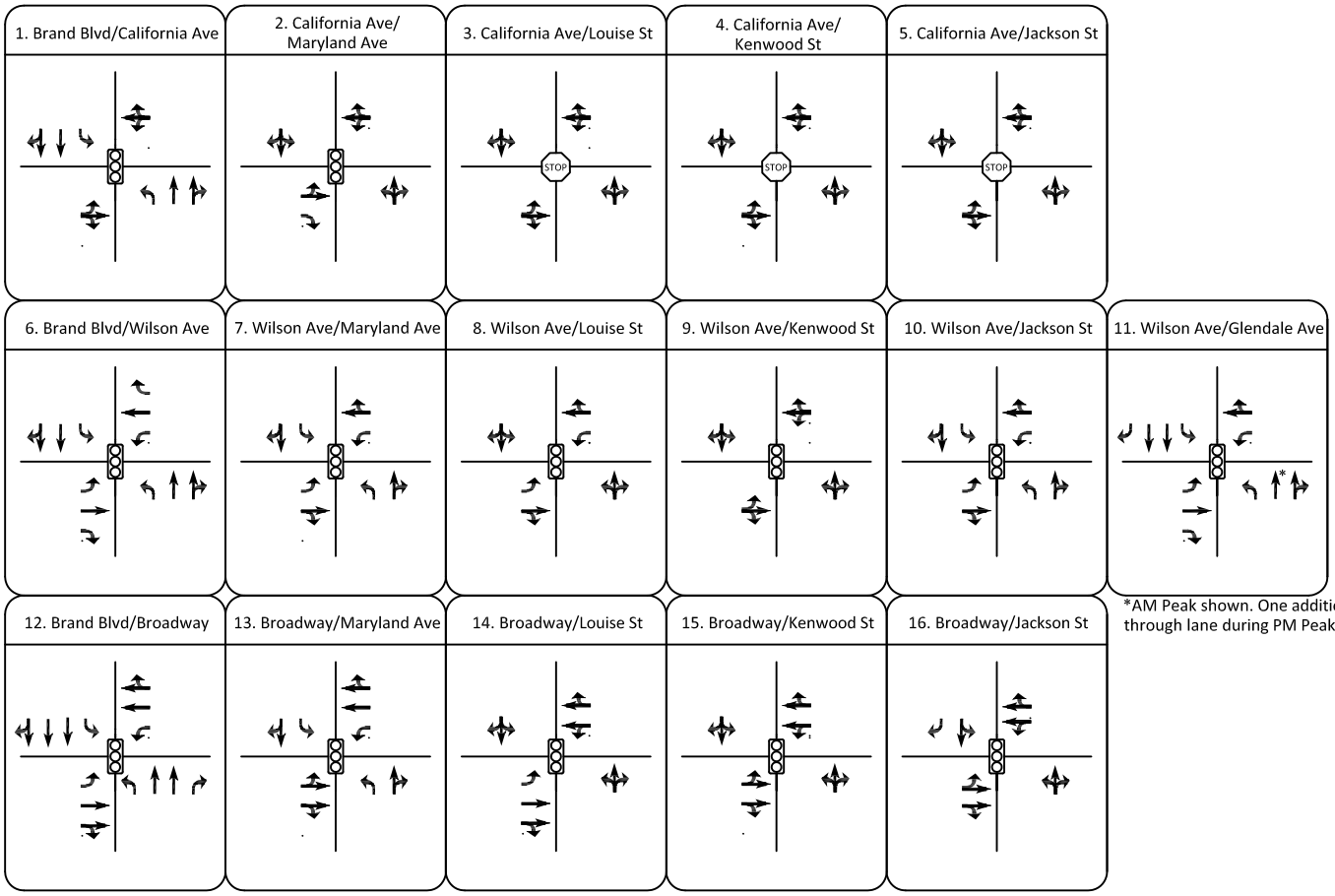

= Project Site

N

N.T.S

JB & ASSOCIATES

Figure 5: Lane Configurations at Study Intersections

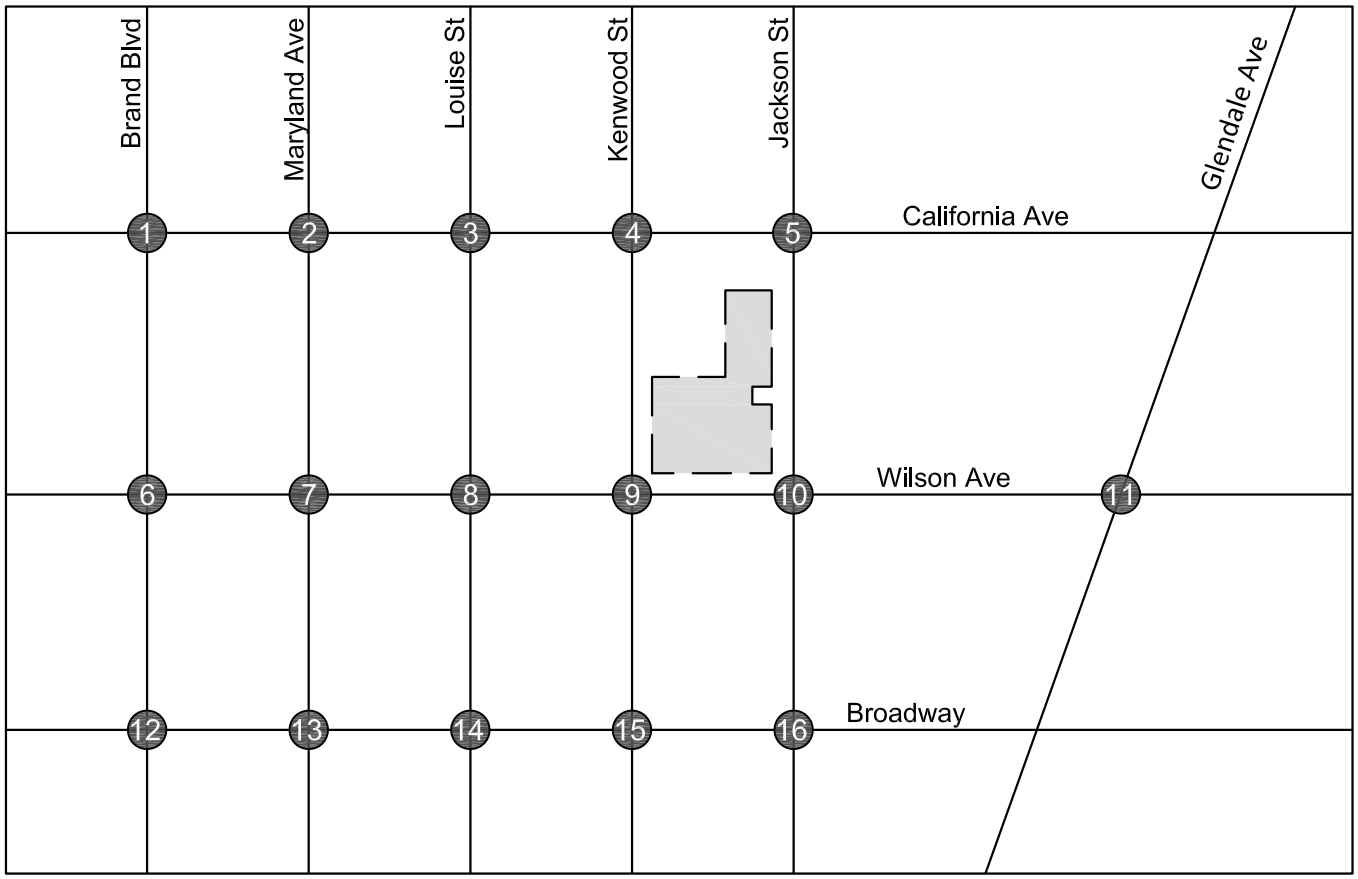

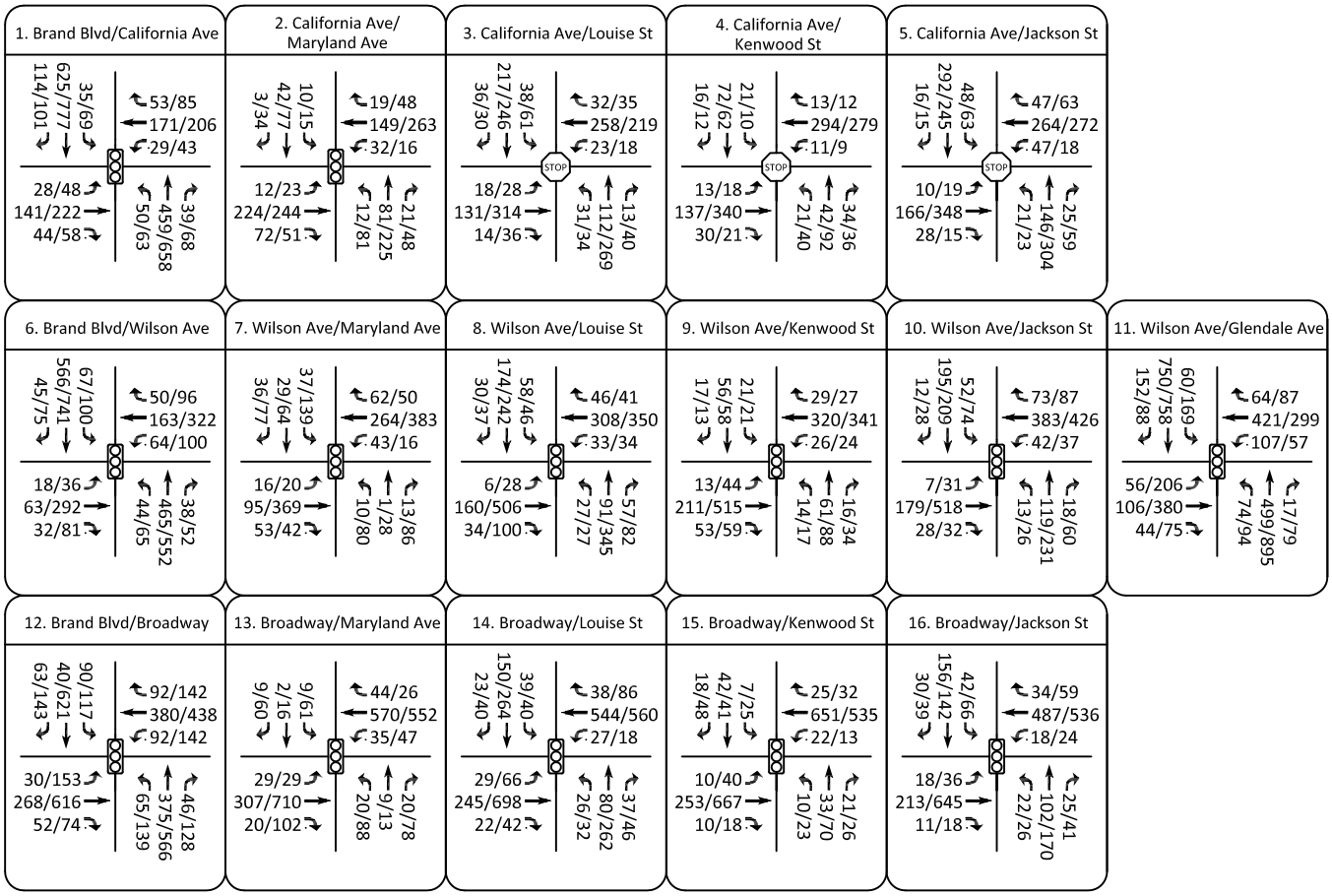

= Project Site

xx /xx = AM/PM Peak

N

N.T.S

JB & ASSOCIATES

Figure 6: Existing Turning Movement Counts (AM/PM Peak)

6.0 PROJECT TRAFFIC GENERATION ANALYSIS

The Project consists of the construction of an apartment complex with 198 residential units. The purpose of this section is to document the proposed project trip generation and resulting traffic study area to be evaluated as part of this traffic analysis.

6.1 Project Trip Generation Methodology

Trip rates from the Institute of Transportation Engineers (ITE) *Trip Generation Manual 10th Edition* were used in this analysis (see **Appendix D** for copies of the ITE land use codes with their respective trip generation rates). Please note that the manual's description for a school district office (land use code 538) is very comparable to the current GUSD headquarters. **Table 2** summarizes the trip generation findings. As shown in the table, the proposed project is forecast to result in 5 fewer AM peak hour trips and 21 new PM peak hour trips.

The City of Glendale's threshold for the preparation of a traffic impact analysis is the net addition of 50 vehicular trips in either the AM or PM peak hours. However, given size of the Project and its proximity to residential areas, it was advisable to conduct a focused traffic impact analysis to determine whether the Project will have any potential impacts in the area.

Table 2: Project Trip Generation[1]

Land Use (ITE Code)	Size	Units	Weekday AM Peak Hour Trips				Weekday PM Peak Hour Trips				Daily Trips	
			Rate	Total	In	Out	Rate	Total	In	Out	Rate	Total
New Project Land Use Added												
Mid-Rise Apartments (221)	198	du	0.36	71	18	53	0.44	87	53	34	5.44	1077
Existing Land Use Removed												
School District Office (538)	32.2	tsf	2.36	-76	-58	-18	2.04	-66	-11	-55	14.37	-463
Total Trip Generation				**-5**	**-40**	**35**	**-**	**21**	**42**	**-21**	**-**	**614**

[1] ITE "Trip Generation" Manual, 10th Edition, 2017

6.2 Project Trip Distribution & Assignment

Trip distribution assumptions are used to determine the origin and destination of new vehicle trips associated with the project. The geographic distribution of project trips is based on the functional classifications of streets in the vicinity, the magnitude of traffic volumes, as well as local knowledge of the roadway network.

Based on the project trip generation shown in **Table 2** and the expected regional trip distribution, a proposed study area for the traffic analysis was derived. The proposed study area includes 16 signalized intersections. The location and the number of the intersections to be analyzed was reviewed and approved by the Department of Public Works Engineering Division.

Figures 7 & 8 illustrate the Trip Distribution and Trip Assignments at the study intersections.

6.3 Project Trip Driveway Access

With respect to the Project's access, the critical peak period for driveway use occurs during the PM Peak period when the apartment land use is expected to generate a total of 53 inbound trips (approximately 1 vehicle/min).

To accommodate the ingress of vehicles into the Project site, the entry gate for the residential access to the parking structure is set approximately 78 feet from Jackson Street and allows an off-street queuing capacity of at least 4 vehicles. The parking structure access system is designed such that as a driver approaches the parking gate, it will automatically open to allow the vehicle to enter the residential parking levels. It is important to note that the new roll-up gates in residential development projects roll-up in less than 3 seconds and as a result there is a very short time a driver has to wait to enter or exit the parking structure.

Assuming a worst case scenario of 4-5 vehicles entering from Jackson Street (two vehicles making a left turn and two vehicles making a right turn) during the PM peak hour, there is adequate queuing capacity in the driveway such that vehicles would not back up onto Jackson Street. It is also important to note that the parking structure driveway is located approximately 220' from Wilson Avenue to ensure that left turn vehicles will not impact the intersection of Jackson Street and Wilson Avenue .

In comparison to the Project's proposed driveway location, the existing GUSD parking lot driveway is only 90' from the Jackson Street and Wilson Avenue intersection. Based on field observations during peak AM/PM peak hour, left turning vehicles do not create any significant delays to the northbound Jackson Street through traffic (however minor delays of 10-20 seconds were occasionally observed).

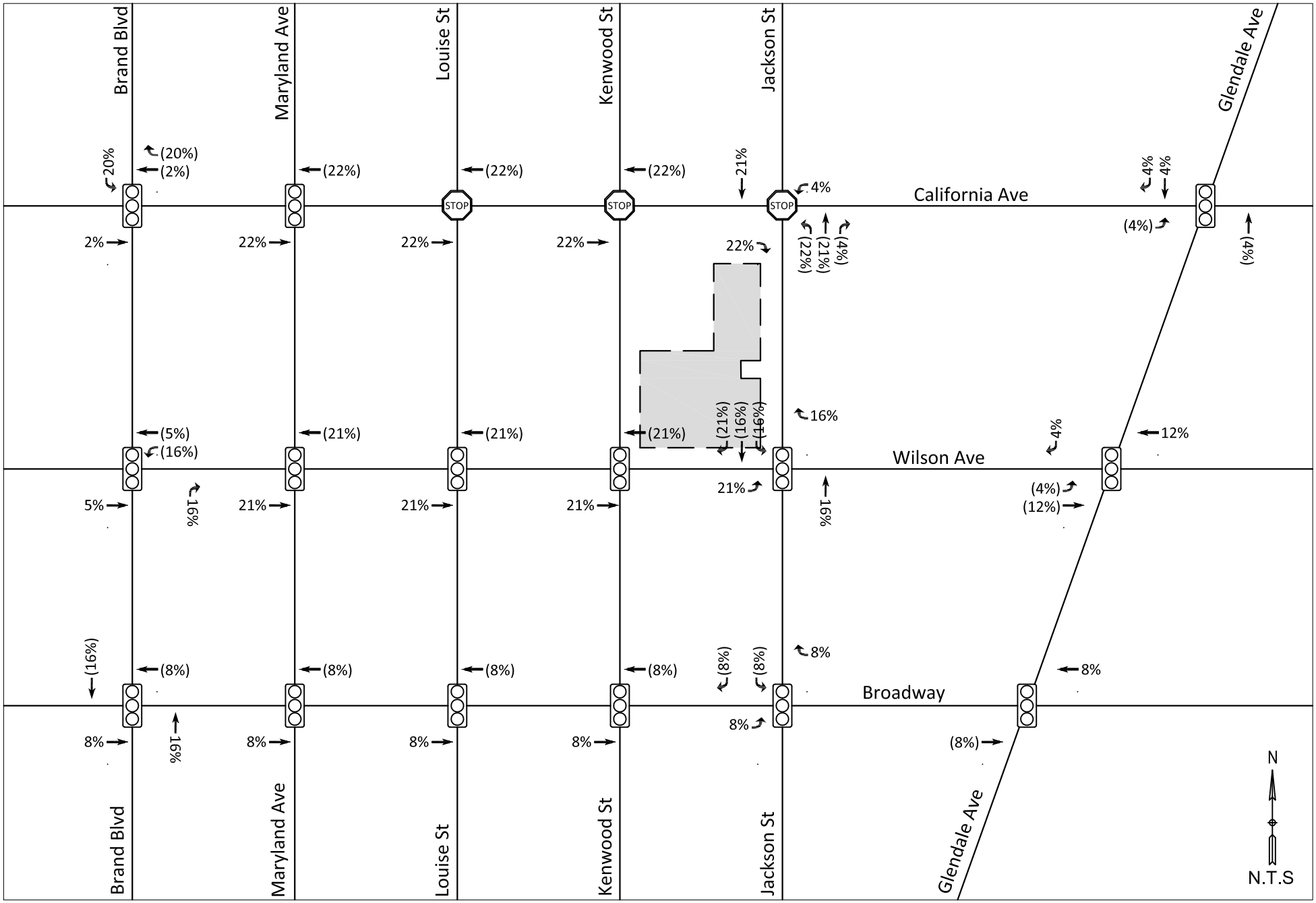

= Project Site xx (xx) = Inbound (Outbound)

JB & ASSOCIATES

Figure 7: Project Trip Distribution

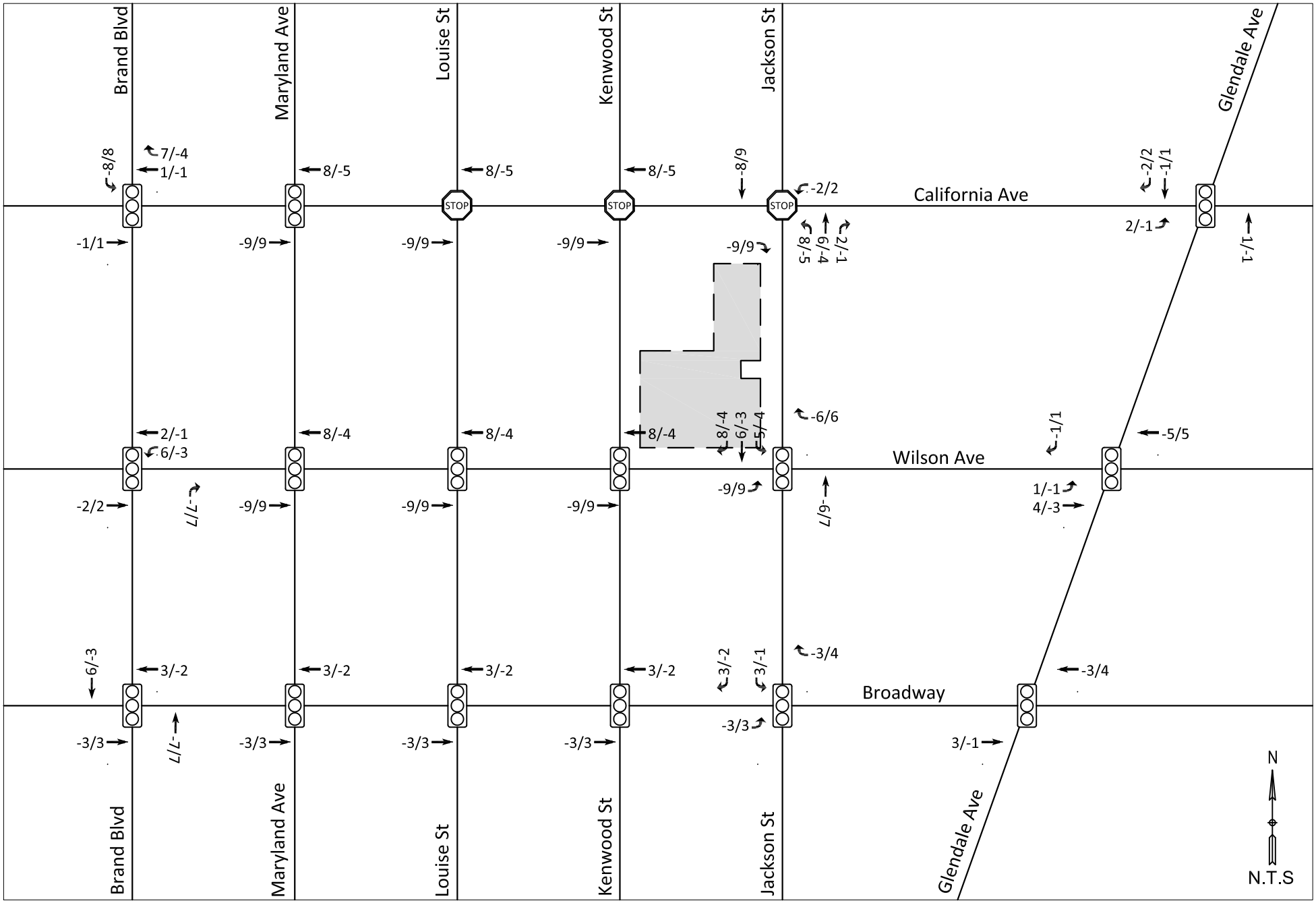

= Project Site xx/xx = AM/PM Peak

JB & ASSOCIATES

Figure 8: Project Trip Assignment

7.0 RELATED PROJECTS & AMBIENT GROWTH

Future peak hour traffic projections for the study intersections have been evaluated to include growth due to (1) related projects in development and (2) ambient traffic growth.

7.1 Trip Generation for Related Projects

To understand the relative traffic impacts for the projected year of completion (2021), this traffic study analyzed potential traffic trips due to the development of related projects in the area. A list of related projects was provided by the City of Glendale Planning Department and their associated trip volumes were calculated using the ITE Trip Generation Manual. A list of these projects, with their corresponding trip generations, can be viewed in **Table 3.** Moreover, a map of the locations of these related projects is shown in **Figure 9**.

Only those projects with a potentially significant impact, and therefore a documented trip generation, were included in the related projects list. Any other developing projects, that were considered small in nature, were encompassed in the area wide ambient growth.

7.2 Ambient Traffic Growth

To account for the future traffic growth not included in the above related projects list (i.e. continuing development and intensification of existing development), the existing traffic volumes were increased by an ambient growth rate of 1% per year. The current (year 2010) Metro Congestion Management Program, defines growth for the Glendale area to be 1.3 % over the entire period between the year 2015 and the year 2020. Therefore the use of 1% per year provides a conservative analysis of the future traffic conditions. These values were then added to the potential traffic generated by the aforementioned related projects to accurately forecast future traffic conditions.

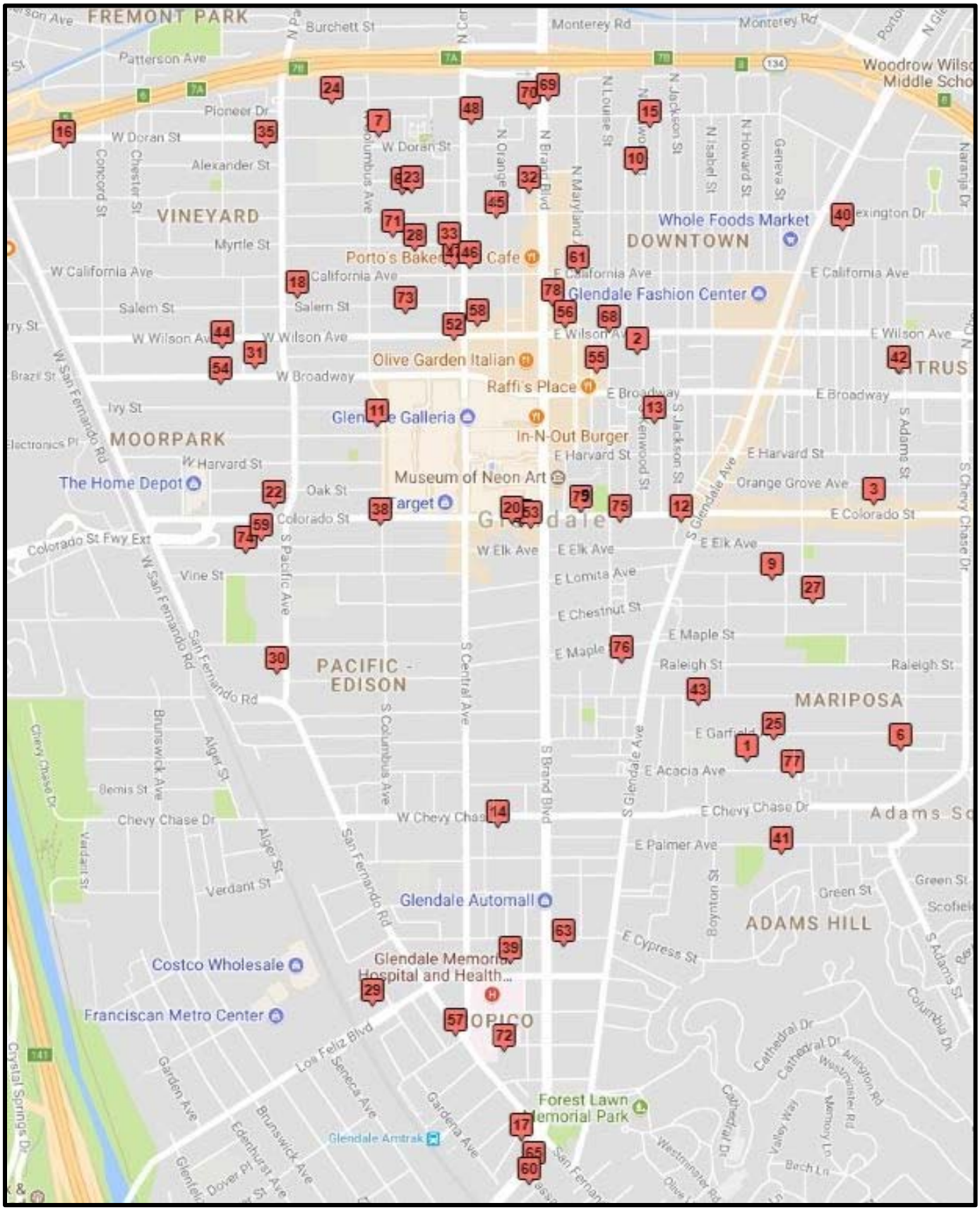

Projects north of the SR-134 Freeway not shown on map

TABLE 3: RELATED PROJECT TRIP GENERATION

Project #	Project Name	Location	Land Use	Size	Unit	Daily Trips	Weekday Peak Hour					
							Morning			Evening		
							Inbound	Outbound	Total	Inbound	Outbound	Total
1	Unnamed Project	611 E. Acacia	Multi-Family	14	DU	93	1	6	7	6	3	9
2	YMCA Meta Housing Project	127-129 N. Kenwood St	Multi-Family	70	DU	466	7	29	36	28	15	43
3	Holiday Inn Suites	1001 E. Colorado Street	Hotel	134	Rm	1095	42	29	71	41	39	80
4	Unnamed Project	1100-1108 N. Brand Blvd	Hotel	85	Rm	694	27	18	45	26	25	51
5	Unnamed Project	1058 Roberta Avenue	Living Facility	5533	Sq.Ft.	42	2	1	3	2	2	4
6	Unnamed Project	913-921 S. Adams St	Multi-Family	18	DU	120	2	7	9	7	4	11
7	Unnamed Project	373 W. Doran St	Multi-Family	5	DU	33	1	2	3	2	1	3
8	Unnamed Project	2612 Honolulu Ave	Multi-Family	28	DU	186	3	11	14	11	6	17
9	Unnamed Project	700 E. Lomita Ave	Multi-Family	6	DU	40	1	2	3	2	1	4
10	Unnamed Project	429-503 Kenwood St	Multi-Family	21	DU	140	2	9	11	8	5	13
11	Unnamed Project	401 Hawthorne St	Multi-Family	17	DU	113	2	7	9	7	4	11
12	Unnamed Project	500 E. Colorado St	Medical Office	30800	Sq.Ft.	1001	57	15	72	26	72	98
			Retail	8230	Sq.Ft.							
13	Unnamed Project	126 S. Kenwood St	Multi-Family	44	DU	293	4	18	22	18	10	27
14	Unnamed Project	206 W. Chevy Chase Dr	Medical Office	21124	Sq.Ft.	312	32	5	37	8	31	39
15	Unnamed Project	534 Kenwood St	Multi-Family	11	DU	73	1	4	6	4	2	7
16	Unnamed Project	800 W Doran St	Multi-Family	52	DU	346	5	21	27	21	11	32
17	Unnamed Project	1815-1821 S. Brand Blvd	Multi-Family	38	DU	207	4	10	14	10	7	17
			Retail	950	Sq.Ft.	43	1	0	1	2	2	4
18	Unnamed Project	463 Salem St.	Multi-Family	10	DU	67	1	4	5	4	2	6
19	Unnamed Project	3013 Montrose Ave	Church	9500	Sq.Ft.	87	3	2	5	2	3	5
20	Colorado Gardens	124 W. Colorado St.	Multi-Family	50	DU	333	5	20	26	20	11	31
21	Unnamed Project	527 Hazel St	Multi-Family	4	DU	27	0	2	2	2	1	2
22	CCTAN/Colorado Mixed-Use	507-525 W. Colorado St	Multi-family	90	DU	599	9	37	46	36	20	56
			Medical Office	18,000	Sq.Ft.	650	34	9	43	18	46	64
			Commercial	1,000	Sq.Ft.	43	0	0	1	2	2	4
23	Unnamed Project	344 W. Milford St	Multi-Family	6	DU	40	1	2	3	2	1	4
24	Unnamed Project	430 Pioneer Dr	Multi-Family	5	DU	33	1	2	3	2	1	3
25	Unnamed Project	700 E. Garfield Ave	Multi-Family	5	DU	33	1	2	3	2	1	3
26	Unnamed Project	2631 Hermosa Ave	Multi-Family	3	DU	20	0	1	2	1	1	2
27	Habitat for Humanity	806 Chestnut St	Multi-Family	3	DU	20	0	1	2	1	1	2
28	Unnamed Project	342-344 Myrtle St	Multi-Family	11	DU	73	1	4	6	4	2	7
29	Tropico Apartments	435 W. Los Feliz	Multi-Family	238	DU	1583	24	97	121	96	52	148
30	Unnamed Project	619 S. Pacific Ave	Multi-Family	27	DU	180	3	11	14	11	6	17
31	Broadway Mixed Use	525 W. Broadway	Multi-Family	180	DU	902	13	62	75	63	30	93
			Retail	14.2	Sq.Ft.							
			Restaurant	4000	Sq.Ft.							
32	Orange/Milford Project	413 N. Brand Blvd	Multi-Family	228	DU	1516	23	93	116	92	49	141
			Commercial	5000	Sq.Ft.	214	3	2	5	9	10	19
33	Unnamed Project	319 N. Central Ave	Multi-Family	92	DU	612	9	38	47	37	20	57
			Commercial	2172	Sq.Ft.	93	1	1	2	4	4	8
34	Unnamed Project	1407 W. Glenoaks Blvd	Multi-Family	55	DU	366	6	22	28	22	12	34
35	Unnamed Project	512 W. Doran St	Multi-Family	4	DU	27	0	2	2	2	1	2
36	Unnamed Project	1017 San Rafael Ave	Multi-Family	5	DU	33	1	2	3	2	1	3
37	Unnamed Project	1407 5th St	Multi-Family	5	DU	33	1	2	3	2	1	3
38	Unnamed Project	400 W. Colorado St	Medical Office	2238	Sq.Ft.	81	4	1	5	2	6	8
			General Office	4697	Sq.Ft.	52	6	1	7	1	6	7
39	Unnamed Project	129 W. Los Feliz Rd	Medical Office	23900	Sq.Ft.	864	45	12	57	24	61	85
40	Unnamed Project	337 N. Cedar St	Multi-Family	4	DU	27	0	2	2	2	1	2
41	Unnamed Project	708 E. Palmer	Multi-Family	3	DU	20	0	1	2	1	1	2
42	Unnamed Project	115 N. Adams St	Multi-Family	4	DU	27	0	2	2	2	1	2
43	Unnamed Project	518 E. Windsor	Multi-Family	34	DU	226	3	14	17	14	7	21
44	Unnamed Project	600 W. Wilson Ave	Multi-Family	3	DU	20	0	1	2	1	1	2
45	Citi Bank Site	210 W. Lexington and 418 N. Central Ave	Multi-Family	464	DU	3613	7	215	222	135	-19	116
			Live/Work	25	du							
			Commercial	8140	Sq.Ft.							
46	Legendary Towers	300 N. Central Ave	Multi-Family	72	DU	479	7	30	37	29	16	45
			Live/Work	8	DU	53	1	3	4	3	2	5
			Commercial	1240	Sq.Ft.	53	1	0	1	2	3	5
47	Unnamed Project	301 N. Central Ave.	Multi-Family	84	DU	559	9	34	43	34	18	52
			Commercial	4397	Sq.Ft.	187	2	2	4	8	8	16
48	North Central Avenue Apartments	607-633 N. Central Avenue; 540 N. Central Ave	Multi-Family	507	DU	3372	52	207	259	204	110	314
49	Unnamed Project	4201 Pennsylvania Ave	Multi-Family	30	DU	200	3	12	15	12	7	19
50	Unnamed Project	518 Glenwood Rd	Multi-Family	6	DU	40	1	2	3	2	1	4
51	Central + Wilson	130 N. Central Ave	Multi-family	153	DU	1017	16	62	78	62	33	95
			Commercial	4900	Sq.Ft.	209	2	2	5	8	10	18
52	Unnamed Project	125 N Central Avenue	Multi-Family	167	DU	1,641	18	80	98	88	43	131
			Commercial Pharmacy	15,100	Sq.Ft.							
53	Hampton Inn & Suites	315 S. Brand Boulevard	Hotel	94	rooms	768	30	20	50	29	27	56
54	Unnamed Project	604-610 W. Broadway	Office	12802	Sq.Ft.	141	18	2	20	3	16	19
			Commercial	1620	Sq.Ft.	69	1	1	2	3	3	6
55	Louise Gardens	111 N. Louise St.	Multi-Family	63	DU	419	6	26	32	25	14	39
56	Laemmle Cinema Lofts	111 E. Wilson Ave. and 215 N. Maryland Ave.	Multi-Family	42	DU	279	4	17	21	17	9	26
			Movie Theater	9690	Sq.Ft.	756	2	0	2	56	4	60

TABLE 3: RELATED PROJECT TRIP GENERATION

Project #	Project Name	Location	Land Use	Size	Unit	Daily Trips	Weekday Peak Hour					
							Morning			Evening		
							Inbound	Outbound	Total	Inbound	Outbound	Total
57	The Link	3901-3915 San Fernando Rd	Multi-family	142	DU	944	14	58	72	57	31	88
			Commercial	11,600	Sq.Ft.	495	5	6	11	19	24	43
			Studio	5,000	Sq.Ft.	55	7	1	8	1	6	7
58	Hyatt Place Glendale	225 Wilson Ave.	Hotel	172	Room	1534	67	48	115	59	61	120
			Restaurant	1950	Sq.Ft.	248	12	9	21	11	8	19
59	Enclave Multifamily Residential Project	525 W. Elk Ave	Multi-Family	71	DU	472	7	29	36	29	15	44
60	Unnamed Project	1838 S. Brand Blvd	Multi-Family	-	-	426	8	20	28	20	14	34
61	Indigo Hotel	Maryland & California	Hotel	140	Rms	1144	44	30	74	43	41	84
62	Meta Housing	1412-1422 5th St & 1116 Sonora Ave	Affordable Senior	66	DU	439	7	27	34	27	14	41
63	Subaru	1304 S. Brand Blvd	Auto Dealership	74	TSF	2390	107	36	142	78	116	194
64	Unnamed Project	120 W. Colorado	Hotel	130	Rooms	1062	41	28	69	40	38	78
65	Unnamed Project	1820 S. Brand Blvd	Live/Work	28	DU	186	3	11	14	11	6	17
66	Unnamed Project	1112-1118 N. Columbus Ave	Multi-Family	11	DU	73	1	4	6	4	2	7
67	Unnamed Project	352-358 W. Milford St	Multi-Family	32	DU	213	3	13	16	13	7	20
68	Unnamed Project	Louise St & Wilson Ave	Hotel	147	DU	720	31	25	56	27	32	59
69	Unnamed Project	610 N. Brand	Multi-Family	265	DU	1762	27	108	135	107	57	164
70	Unnamed Project	601 N. Brand	Multi-Family	604	DU	4017	62	246	308	243	131	374
71	Unnamed Project	361 Myrtle St	Multi-Family	12	DU	80	1	5	6	5	2	7
72	Unnamed Project	130 W. Eulalia	Medical Office	4074	SF	147	7	2	9	4	11	15
73	Unnamed Project	350 Salem St	Multi-Family	12	DU	80	1	5	6	5	2	7
74	Unnamed Project	532 W. Elk Ave	Multi-Family	6	DU	40	1	2	3	2	2	4
75	Unnamed Project	300 E. Colorado	Gym	5	TSF	165	4	3	7	10	8	18
76	Unnamed Project	712 S. Louise St	Multi-Family	10	DU	67	1	4	5	4	2	6
77	Unnamed Project	722 E. Acacia Ave	Multi-Family	14	DU	93	1	6	7	6	3	9
78	Unnamed Project	220 N. Brand Blvd	Restaurant	4900	SF	623	30	23	53	28	20	48
79	Armenian Museum	Brand & Colorado	Museum	-	-	1179	8	0	8	101	30	131

8.0 METHOD OF TRAFFIC IMPACT ANALYSIS

8.1 Signalized Intersections

For signalized intersections, the City of Glendale uses the Intersection Capacity Utilization (ICU) method to analyze the potential traffic related impacts created by the proposed development. This method relies on the determination of a Level of Service (LOS) at each of the study intersections by first determining their corresponding Volume-to-Capacity (v/c) ratios. The ICU method therefore essentially compares the volume of traffic against the capacity of an intersection. Please refer to **Appendix B** for the ICU calculations for the study intersections.

Level of Service varies from at best LOS A (free flow/excellent) to at worst LOS of F (stop-and-go/failure). A LOS A and F, according to the Highway Capacity Manual, correspond to a v/c ratio less than 0.600 and a v/c greater than 1.001 respectively. Please refer to **Appendix C** for a more detailed description of the various Levels of Services.

The v/c ratios are determined for the study intersections by analyzing both their A.M. and P.M. peak hours for each of the following scenarios:

(1) Existing Traffic Conditions
(2) Existing Plus Project Traffic Conditions
(3) Future (2021) Without Project Traffic Conditions (Existing plus ambient growth & related projects)
(4) Future (2021) With Project Traffic Conditions

To determine if the project would cause a significant increase in traffic, relative to the existing traffic system, the City of Glendale uses the following thresholds:

Table 4: City of Glendale LOS Thresholds

City of Glendale Signalized Intersection Impact Threshold Criteria		
Final v/c	Level of Service	Project-Related Increase in v/c
>0.800-.900	D	Equal to or greater than 0.020
>0.900-1.00	E	Equal to or greater than 0.020
>1.000	F	Equal to or greater than 0.020

Essentially, if a signalized intersection operates at a LOS of D or worse and has a project-related increase in its volume-to-capacity ratio of 0.020 or more, then a significant traffic impact would be caused by the project and mitigations may be needed.

8.2 Non-Signalized Intersection

For the non-signalized study intersections, the City uses the Highway Capacity Manual (HCM) unsignalized stop-controlled intersection capacity analysis method to estimate LOS's. The HCM defines LOS for non-signalized intersections as a function of its average vehicle control delay. This method allows for an analysis as to whether the non-signalized intersection's operating conditions would be significantly changed with the addition of the Project traffic.

To determine if the project would cause a significant traffic impact, relative to the existing traffic system, the City of Glendale uses a 3.0 second change in intersection delay as its threshold.

9.0 TRAFFIC IMPACT ANALYSIS FINDINGS

The following scenarios were analyzed to determine the proposed project impact at the 16 study intersections. Each individual scenario is presented and analyzed in a table form to show the Volume to Capacity ratios (or Delay for non-signalized intersections) and resulting Levels of Service (LOS) for the 16 study intersections. Each table also includes a corresponding figure:

1) Existing Traffic Conditions ……**Table 5, Figure 6**
2) Existing Plus Project Traffic Conditions ……**Table 6, Figure 10**
3) Future (Year 2021) Without Project Traffic Conditions ……**Table 7, Figure 11**
   (Existing plus ambient growth & related projects)
4) Future (Year 2021) With Project Traffic Conditions……**Table 8, Figure 12**
5) Future (Year 2021) With Project + Mitigation ……**Table 9**

9.1 Existing Level of Service

Please refer to **Table 5** for a list of the study intersections and their corresponding existing Levels of Services. Please note that three of the study intersections (intersections 3, 5 and 8) operate at a LOS D or worse in the PM Peak period.

Table 5: Existing Conditions LOS

Study Intersections		Intersection Control Type	Existing Conditions			
			AM Peak		PM Peak	
			V/C (Delay)	LOS	V/C (Delay)	LOS
1	California Avenue & Brand Boulevard	Signalized	0.538	A	0.653	B
2	California Avenue & Maryland Avenue	Signalized	0.373	A	0.619	B
3	California Avenue & Louise Street	All-Way Stop	(12.3 sec)	B	(27.6 sec)	D
4	California Avenue & Kenwood Street	All-Way Stop	(10.0 sec)	B	(12.5 sec)	B
5	California Avenue & Jackson Street	All-Way Stop	(16.4 sec)	C	(53.0 sec)	F
6	Wilson Avenue & Brand Boulevard	Signalized	0.432	A	0.641	B
7	Wilson Avenue & Maryland Avenue	Signalized	0.361	A	0.541	A
8	Wilson Avenue & Louise Street	Signalized	0.506	A	0.813	D
9	Wilson Avenue & Kenwood Street	Signalized	0.413	A	0.601	B
10	Wilson Avenue & Jackson Street	Signalized	0.527	A	0.695	B
11	Wilson Avenue & Glendale Avenue	Signalized	0.719	C	0.779	C
12	Broadway & Brand Boulevard	Signalized	0.44	A	0.654	B
13	Broadway & Maryland Avenue	Signalized	0.334	A	0.495	A
14	Broadway & Louise Street	Signalized	0.457	A	0.586	A
15	Broadway & Kenwood Street	Signalized	0.373	A	0.425	A
16	Broadway & Jackson Street	Signalized	0.417	A	0.523	A

9.2 Existing Plus Project Traffic Conditions

To determine the Existing Plus Project Traffic Conditions, the project related traffic was added to existing traffic conditions. Please refer to **Figure 10** for an illustration of the Existing Plus Project morning and evening peak hour intersection volumes.

Please refer to **Table 6** for a list of the study intersections and their corresponding Levels of Services for the Existing Plus Project Traffic Conditions scenario.

Based on the City's significance criteria, the study intersections would not be significantly impacted as a result of the addition of the Project traffic.

Table 6: Existing Plus Project Conditions

Study Intersections		Intersection Control Type	Existing Conditions				Existing Plus Project Conditions							
			AM Peak		PM Peak		AM Peak				PM Peak			
			V/C (Delay)	LOS	V/C (Delay)	LOS	V/C (Delay)	LOS	Change in V/C (Delay)	Significant Impact	V/C (Delay)	LOS	Change in V/C (Delay)	Significant Impact
1	California Avenue & Brand Boulevard	Signalized	0.538	A	0.653	B	0.543	A	0.005	No	0.649	B	-0.004	No
2	California Avenue & Maryland Avenue	Signalized	0.373	A	0.619	B	0.368	A	-0.005	No	0.616	B	-0.003	No
3	California Avenue & Louise Street	All-Way Stop	(12.3 sec)	B	(27.6 sec)	D	(12.4 sec)	B	(0.1 sec)	No	(28.3 sec)	D	(0.7 sec)	No
4	California Avenue & Kenwood Street	All-Way Stop	(10.0 sec)	B	(12.5 sec)	B	(10.1 sec)	B	(0.1 sec)	No	(12.6 sec)	B	(0.1 sec)	No
5	California Avenue & Jackson Street	All-Way Stop	(16.4 sec)	C	(53.0 sec)	F	(16.2 sec)	C	(-0.2 sec)	No	(58.6 sec)	F	(5.6 sec)	Yes
6	Wilson Avenue & Brand Boulevard	Signalized	0.432	A	0.641	B	0.433	A	0.001	No	0.640	B	-0.001	No
7	Wilson Avenue & Maryland Avenue	Signalized	0.361	A	0.541	A	0.366	A	0.005	No	0.539	A	-0.002	No
8	Wilson Avenue & Louise Street	Signalized	0.506	A	0.813	D	0.511	A	0.005	No	0.818	D	0.005	No
9	Wilson Avenue & Kenwood Street	Signalized	0.413	A	0.601	B	0.418	A	0.005	No	0.607	B	0.006	No
10	Wilson Avenue & Jackson Street	Signalized	0.527	A	0.695	B	0.528	A	0.001	No	0.697	B	0.002	No
11	Wilson Avenue & Glendale Avenue	Signalized	0.719	C	0.779	C	0.716	C	-0.003	No	0.781	C	0.002	No
12	Broadway & Brand Boulevard	Signalized	0.44	A	0.654	B	0.439	A	-0.001	No	0.658	B	0.004	No
13	Broadway & Maryland Avenue	Signalized	0.334	A	0.495	A	0.335	A	0.001	No	0.496	A	0.001	No
14	Broadway & Louise Street	Signalized	0.457	A	0.586	A	0.458	A	0.001	No	0.586	A	0.000	No
15	Broadway & Kenwood Street	Signalized	0.373	A	0.425	A	0.373	A	0.000	No	0.426	A	0.001	No
16	Broadway & Jackson Street	Signalized	0.417	A	0.523	A	0.416	A	-0.001	No	0.523	A	0.000	No

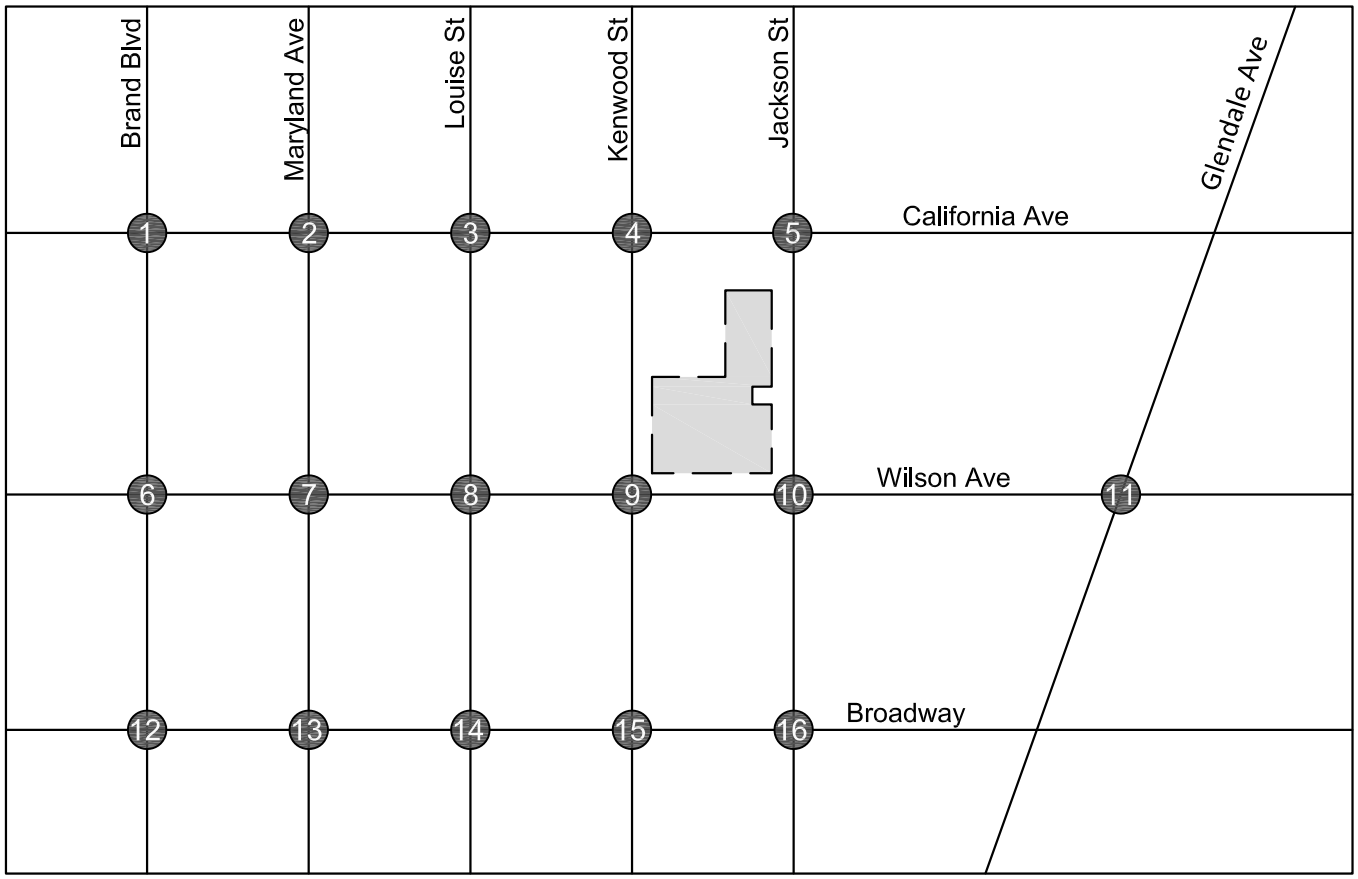

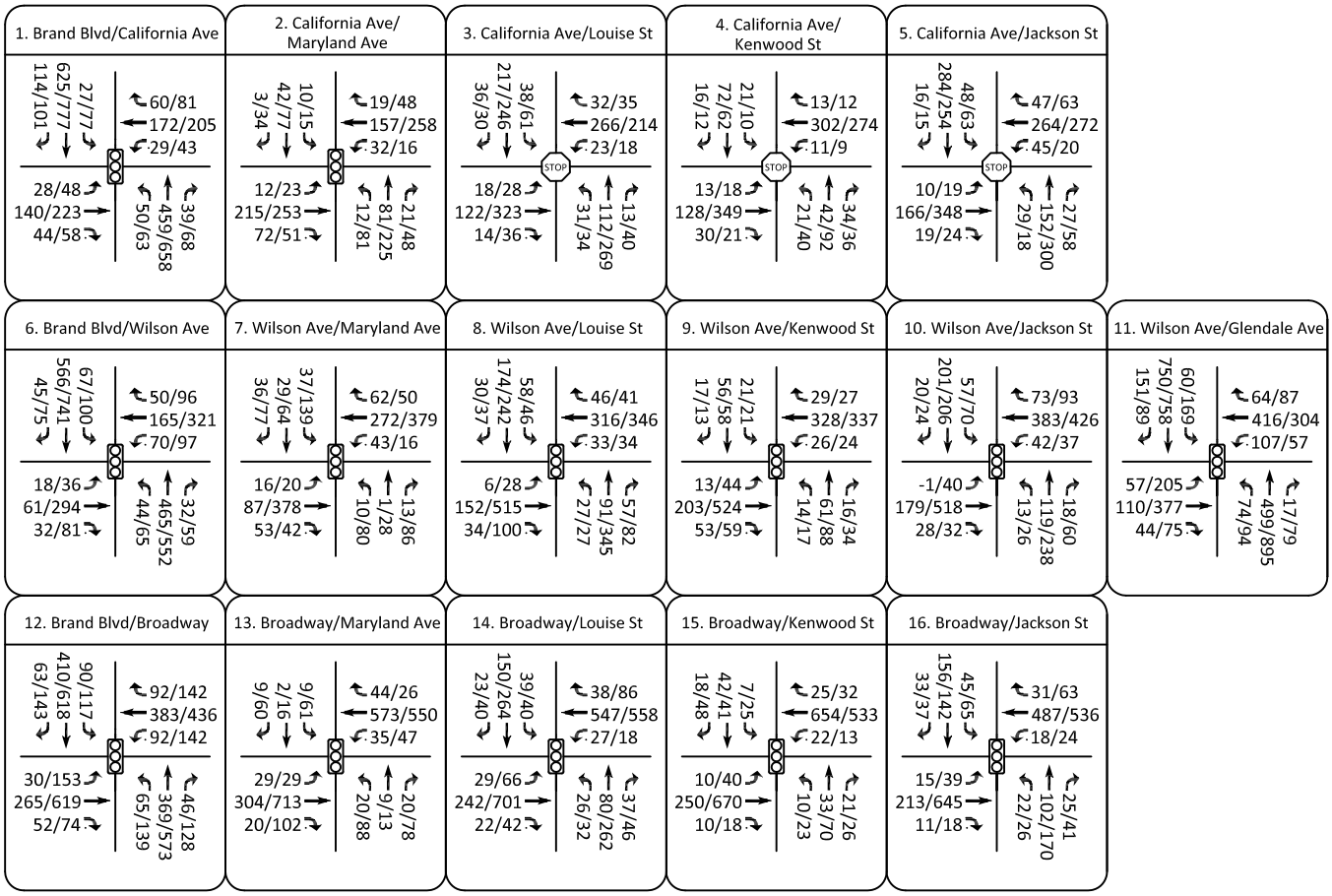

= Project Site

xx /xx = AM/PM Peak

JB & ASSOCIATES

Figure 10: Existing Plus Project (AM/PM Peak) Traffic Volumes

9.3 Future (Year 2021) Without Project Traffic Conditions

To determine the Future (Year 2021) Without Project Traffic Conditions, the trips generated by related projects (projects under construction, approved, and planned) was added to existing conditions. Additionally, the existing traffic volumes were increased by an ambient growth rate of 1% per year. Please refer to **Figure 11** for an illustration of the Future without Project morning and evening peak hour intersection volumes.

Please refer to **Table 7** for a list of the study intersections and their corresponding Levels of Services for the Future (Year 2021) Without Project Traffic Conditions scenario.

Please note that by the expected completion year of 2021, the following two stop controlled intersections are expected to operate at a LOS E or F during the PM peak even without Project traffic:

1. California Avenue & Louise St (LOS E)
2. California Avenue & Jackson St (LOS F)

Table 7: Future (Year 2021) Without Project Conditions LOS

Study Intersections		Intersection Control Type	Future Conditions			
			AM Peak		PM Peak	
			V/C (Delay)	LOS	V/C (Delay)	LOS
1	California Avenue & Brand Boulevard	Signalized	0.621	B	0.755	C
2	California Avenue & Maryland Avenue	Signalized	0.412	A	0.673	B
3	California Avenue & Louise Street	All-Way Stop	(13.2 sec)	B	(41.0 sec)	E
4	California Avenue & Kenwood Street	All-Way Stop	(10.4 sec)	B	(13.4 sec)	B
5	California Avenue & Jackson Street	All-Way Stop	(18.4 sec)	C	(74.5 sec)	F
6	Wilson Avenue & Brand Boulevard	Signalized	0.516	A	0.722	C
7	Wilson Avenue & Maryland Avenue	Signalized	0.398	A	0.594	A
8	Wilson Avenue & Louise Street	Signalized	0.536	A	0.866	D
9	Wilson Avenue & Kenwood Street	Signalized	0.436	A	0.633	B
10	Wilson Avenue & Jackson Street	Signalized	0.543	A	0.718	C
11	Wilson Avenue & Glendale Avenue	Signalized	0.746	C	0.808	D
12	Broadway & Brand Boulevard	Signalized	0.492	A	0.765	C
13	Broadway & Maryland Avenue	Signalized	0.37	A	0.536	A
14	Broadway & Louise Street	Signalized	0.515	A	0.657	B
15	Broadway & Kenwood Street	Signalized	0.411	A	0.467	A
16	Broadway & Jackson Street	Signalized	0.441	A	0.557	A

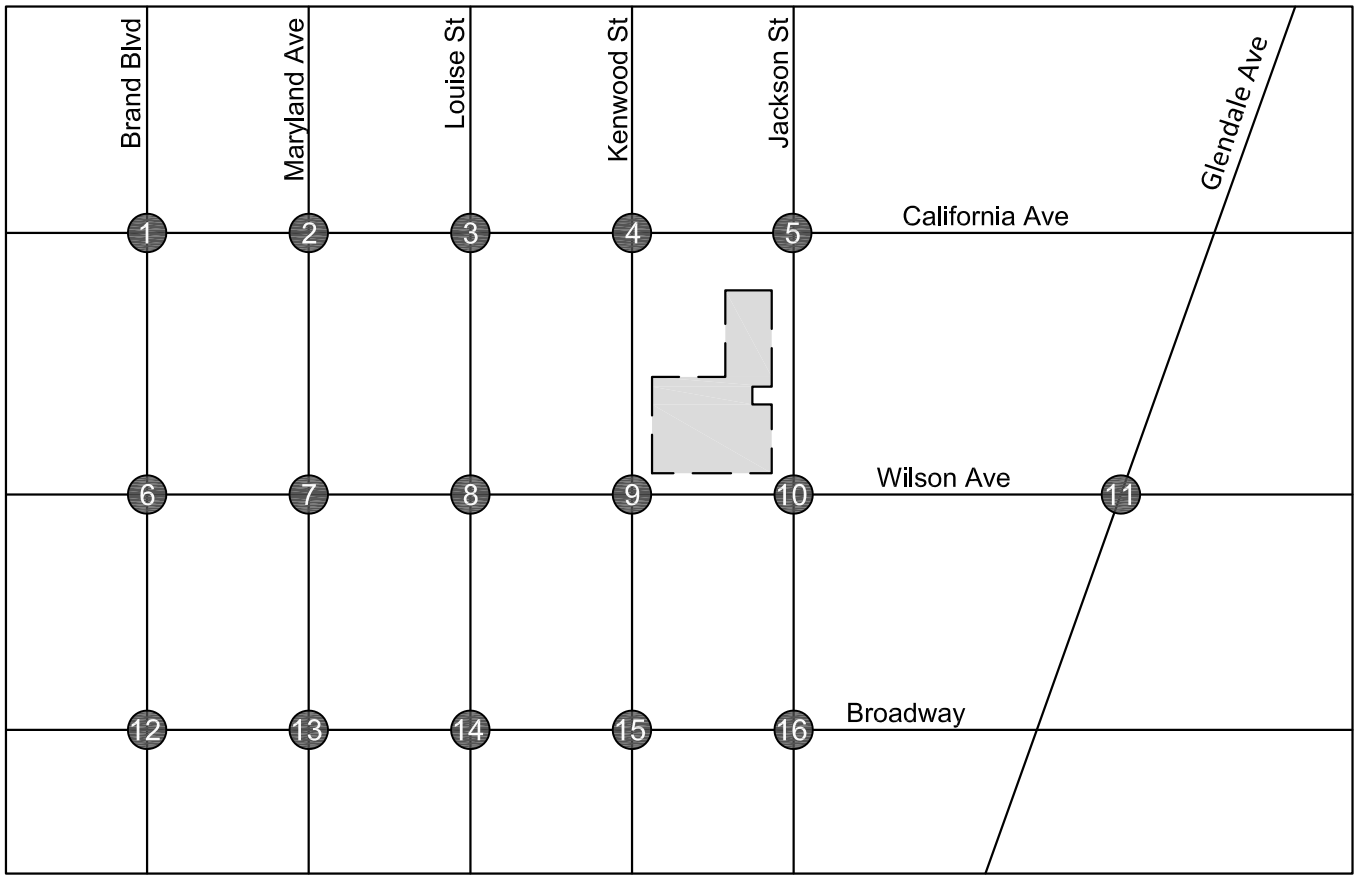

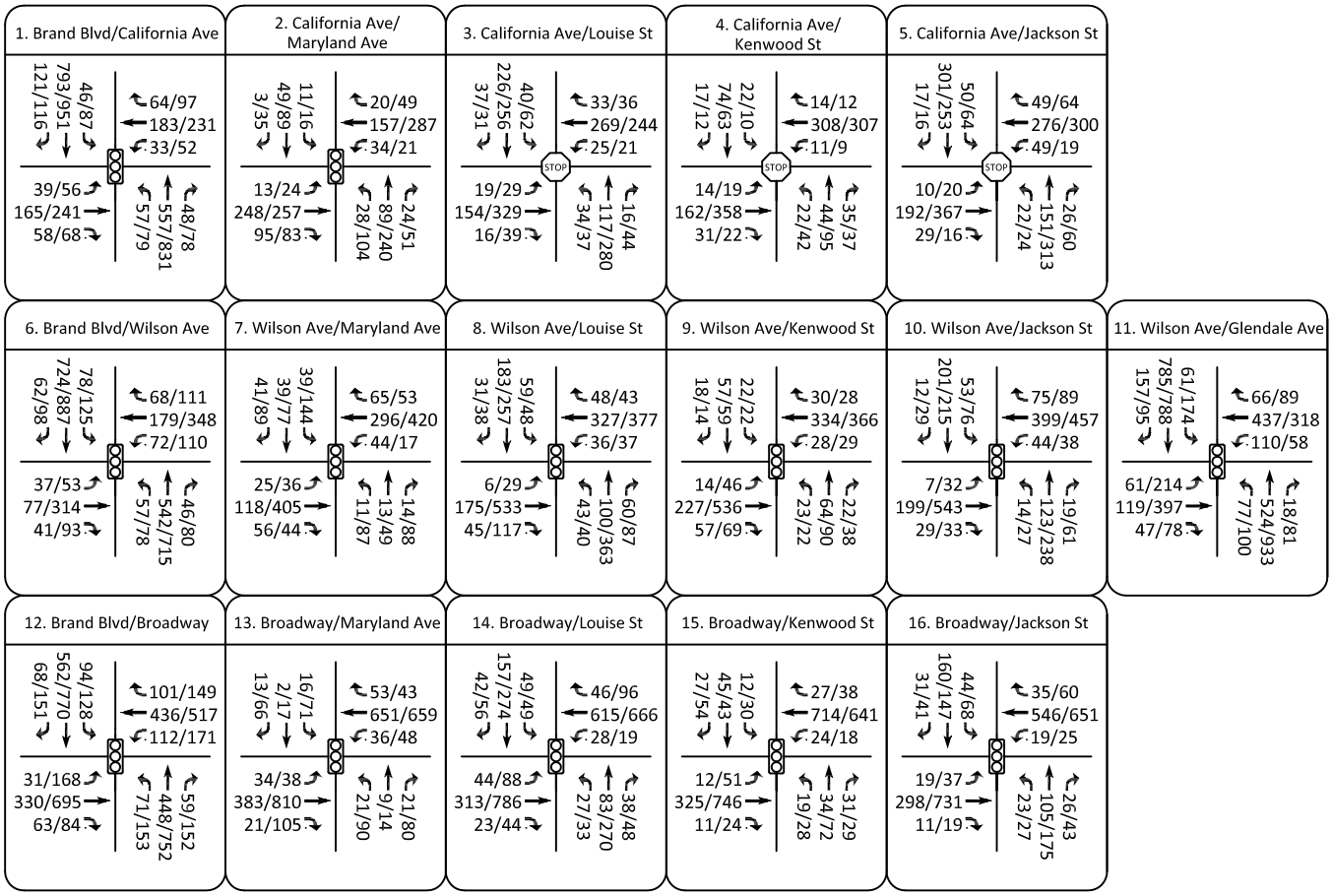

= Project Site

xx /xx = AM/PM Peak

JB & ASSOCIATES

Figure 11: Future (Year 2021) Without Project (AM/PM Peak) Traffic Volumes

9.4 Future (Year 2021) With Project Traffic Conditions

To determine the Future (Year 2021) With Project Traffic Conditions, the traffic generated by the proposed project was added to the Future (Year 2021) Without Project Traffic Conditions. Please refer to **Figure 12** for an illustration of the Future (Year 2021) with project traffic morning and evening peak hour intersection volumes.

Please refer to **Table 8** for a list of the study intersections and their corresponding Levels of Services for the Future (Year 2021) With Project Traffic Conditions scenario.

Overall, as shown in **Table 8,** none of the signalized intersections included in this study would have significant impacts attributable to the proposed Project. While the proposed apartment building will generate 71 AM trips and 87 PM trips, the existing land uses to be removed currently generate an estimated 76 AM trips and 66 PM trips. As a result, the net change in total trips due to the Project is a decrease in the AM peak by 5 trips and an increase in the PM peak by 21 trips. Therefore, based on the project trip distribution, all of the signalized intersections in the study are not significantly impacted when the Project generated trips are added. In fact, the LOS at the following signalized intersections are expected to improve, in either the AM or PM Peak periods, as a result of the Project because the Project generates less inbound AM trips and less outbound PM trips in comparison to the existing GUSD Administrative Office :

- California Ave & Brand Blvd (PM)
- California Ave & Maryland Ave (AM/PM)
- Wilson Ave & Brand Blvd (PM)
- Wilson Ave & Maryland Ave (PM)
- Wilson Ave & Glendale Ave (AM)
- Broadway & Brand Blvd (AM)
- Broadway & Louise St (PM)
- Broadway & Jackson St (AM)

However, at one of the three all-way stop-controlled intersections in the study area (California Avenue and Jackson Street), the increase in intersection delay (4.8 seconds) during the PM peak is estimated to exceed the City's threshold for significance (3.0 seconds). Mitigation for this impact is identified in Section 9.5.

Table 8: Opening Year (2021) With Project Conditions

Study Intersections		Intersection Control Type	Future Conditions				Future Plus Project Conditions							
			AM Peak		PM Peak		AM Peak				PM Peak			
			V/C (Delay)	LOS	V/C (Delay)	LOS	V/C (Delay)	LOS	Change in V/C (Delay)	Significant Impact	V/C (Delay)	LOS	Change in V/C (Delay)	Significant Impact
1	California Avenue & Brand Boulevard	Signalized	0.621	B	0.755	C	0.626	B	0.005	No	0.752	C	-0.003	No
2	California Avenue & Maryland Avenue	Signalized	0.412	A	0.673	B	0.406	A	-0.006	No	0.669	B	-0.004	No
3	California Avenue & Louise Street	All-Way Stop	(13.2 sec)	B	(41.0 sec)	E	(13.3 sec)	B	(0.1 sec)	No	(42.5 sec)	E	(1.5 sec)	No
4	California Avenue & Kenwood Street	All-Way Stop	(10.4 sec)	B	(13.4 sec)	B	(10.5 sec)	B	(0.1 sec)	No	(13.6 sec)	B	(0.2 sec)	No
5	California Avenue & Jackson Street	All-Way Stop	(18.4 sec)	C	(74.5 sec)	F	(18.2 sec)	C	(-0.2 sec)	No	(79.3 sec)	F	(4.8 sec)	Yes
6	Wilson Avenue & Brand Boulevard	Signalized	0.516	A	0.722	C	0.518	A	0.002	No	0.721	C	-0.001	No
7	Wilson Avenue & Maryland Avenue	Signalized	0.398	A	0.594	A	0.403	A	0.005	No	0.591	A	-0.003	No
8	Wilson Avenue & Louise Street	Signalized	0.536	A	0.866	D	0.541	A	0.005	No	0.871	D	0.005	No
9	Wilson Avenue & Kenwood Street	Signalized	0.436	A	0.633	B	0.441	A	0.005	No	0.638	B	0.005	No
10	Wilson Avenue & Jackson Street	Signalized	0.543	A	0.718	C	0.543	A	0.000	No	0.720	C	0.002	No
11	Wilson Avenue & Glendale Avenue	Signalized	0.746	C	0.808	D	0.743	C	-0.003	No	0.811	D	0.003	No
12	Broadway & Brand Boulevard	Signalized	0.492	A	0.765	C	0.488	A	-0.004	No	0.768	C	0.003	No
13	Broadway & Maryland Avenue	Signalized	0.37	A	0.536	A	0.371	A	0.001	No	0.537	A	0.001	No
14	Broadway & Louise Street	Signalized	0.515	A	0.657	B	0.516	A	0.001	No	0.656	B	-0.001	No
15	Broadway & Kenwood Street	Signalized	0.411	A	0.467	A	0.412	A	0.001	No	0.468	A	0.001	No
16	Broadway & Jackson Street	Signalized	0.441	A	0.557	A	0.44	A	-0.001	No	0.558	A	0.001	No

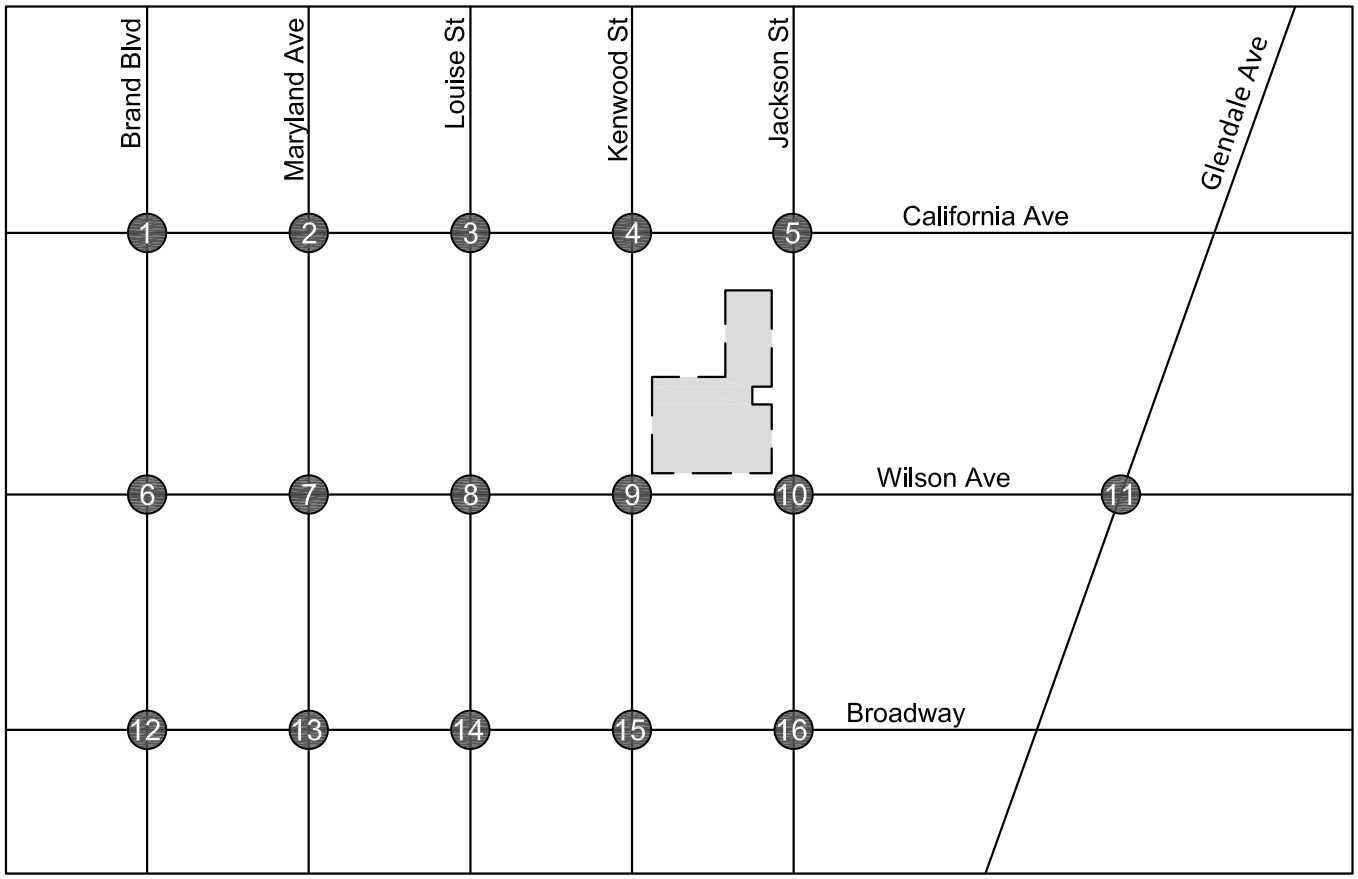

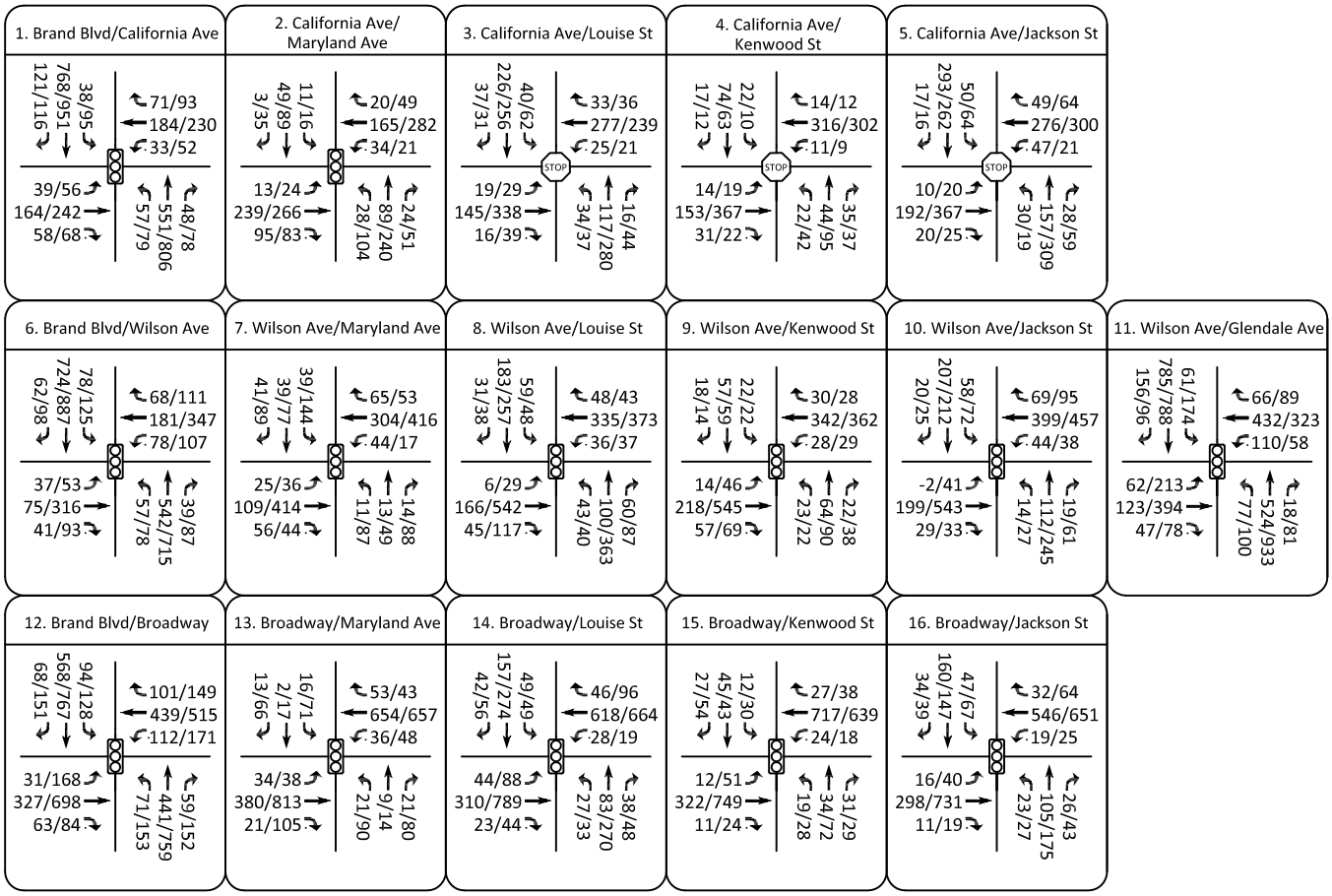

= Project Site

xx /xx = AM/PM Peak

JB & ASSOCIATES

Figure 12: Future (Year 2021) With Project (AM/PM Peak) Traffic Volumes

9.5 Mitigation Measures

As a result of Project traffic, related projects and ambient growth in the area of project, the intersection of California Avenue & Jackson Street is expected to have an increase in intersection delay of 4.8 seconds (PM peak) in the 2021 completion year. This increase in intersection delay exceeds the City's threshold for significance (3.0 seconds).

To mitigate the increase in intersection delay, a mitigation is proposed as part of the Project which would signalize the intersection of California Avenue and Jackson Street. A Traffic Signal Warrant analysis was conducted, as required in the California Manual on Uniform Traffic Control Devices, to determine if a traffic signal would be justified and whether it would improve traffic operations at the subject intersection.

To conduct the analysis, new approach volume counts were collected on Wednesday, October 18, 2017 (see **Appendix A**). These new traffic counts were used to determine whether the existing traffic conditions at the intersection warrant signalization. The results of the analysis indicate that the intersection of California Avenue and Jackson Street currently meets the following two signal warrants and the installation of a traffic signal is justified:

- Warrant 1, Eight-Hour Vehicular Volume; and
- Warrant 2, Four-Hour Vehicular Volume

It is important to note that this intersection currently meets these two warrants even without the addition of Project traffic.

Therefore, both the Project and the surrounding street network would benefit from the operations of a traffic signal. By the Project completion year of 2021, with the proposed mitigation measure, this intersection would operate at LOS A during the AM Peak and LOS B during the PM Peak with the Project (as opposed to LOS C in the AM Peak and LOS F in the PM Peak without the Project and without mitigation).

Please refer to **Appendix E** for the level of service calculations for these mitigation scenarios and **Table 9** for a comparison of the following two scenarios:

- Future (year 2021) without Project + Mitigations
- Future (year 2021) with Project + Mitigation

Table 9: Future (Year 2021) With Project Condition + Proposed Mitigations LOS

Study Intersections		Intersection Control Type	Future Without Project + Mitigation Conditions				Future Plus Project Conditions + Mitigation Conditions							
			AM Peak		PM Peak		AM Peak				PM Peak			
			V/C	LOS	V/C	LOS	V/C	LOS	Change in V/C	Significant Impact	V/C	LOS	Change in V/C	Significant Impact
5	California Avenue & Jackson Street	Signalized	0.584	A	0.652	B	0.583	A	-0.001	No	0.653	B	0.001	No

10.0 CONGESTION MANAGEMENT PROGRAM (CMP) TRAFFIC IMPACT

Proposition 111, enacted in June 1990 by California voters, established a nine cent per gallon gas tax for the purpose of funding transportation related improvements statewide. In order to be eligible for the revenues created by the proposition, counties in California must adopt a Congestion Management Program. The purpose of the CMP is to ensure that a more collaborative approach is taken towards addressing traffic related impacts due to local growth. The proposed project follows the guidelines as set forth by the *2010 Congestion Management Program for Los Angeles County*. This traffic impact study analyzed CMP concerns related to Intersections, Freeways, and Transit.

10.1 Intersections

As set forth by the *2010 Congestion Management Program for Los Angeles County*, intersections designated as CMP monitored intersections must be identified and examined if the proposed project will add 50 or more trips during the A.M. or P.M. peak periods. There are no CMP intersection monitoring locations in the project study area. Therefore, no further review of potential impacts at any further intersections is needed to be in compliance with the *2010 Congestion Management Program for Los Angeles County*.

10.2 Freeways

The following CMP freeway monitoring locations have been identified in the project vicinity:

CMP Station	Segment
No. 1005	I-5 Freeway south of Colorado Boulevard Extension
No. 1055	SR-134 Freeway east of Central Avenue

The CMP guidelines, according to the *2010 Congestion Management Program for Los Angeles County*, require that freeway monitoring stations be examined if the proposed project will add 150 or more trips during either the A.M. or P.M. weekday peak periods.

The Project generates a total of -5 A.M. and 21 P.M. peak hour trips respectively which is less than the 150 trips threshold required by the *2010 Congestion Management Program for Los Angeles County*. As a result, no freeway impact analysis is needed.

10.3 Transit

Transit service is provided in the vicinity of the proposed Project. Therefore, as required by the *2010 Congestion Management Program for Los Angeles County*, a review has been made of the CMP transit service.

The CMP provides adjusted values to be used to evaluate the calculated project trip generation. The transit adjustment is as follows:

Person Trips = 1.4 times vehicle trips

Transit Trips = 3.5% (.035) of total person trips

Therefore, according to the Congestion Management Program guidelines, the proposed project is forecast to generate 1 less transit trips during the A.M. peak hour and 1 additional transit trip during the P.M. Peak hour. Over a 24-hour period, the proposed project is forecast to generate 30 additional transit trips. The calculations are as follows:

A.M. Peak Hour = -5 Vehicle Trips x 1.4 x 0.035 = -1 Transit Trips

P.M. Peak Hour = 21 Vehicle Trips x 1.4 x 0.035 = 1 Transit Trip

Daily (24-hour period) = 614 Vehicle Trips x 1.4 x 0.035 = 30 Transit Trips

It is expected that the current described transit system in Section 4.3 can adequately provide transit services based on the number of generated trips above. Therefore, no transit related impacts are expected to occur as a result of the proposed project.

11.0 CONCLUSION/RECOMMENDATION

The Traffic Impact Analysis projected the trips generated by the proposed 198 dwelling unit apartment complex. To evaluate the impacts of the Project, 16 intersections were analyzed. Traffic counts were obtained at the study locations and the Level of Service (LOS) of these intersections were evaluated under the following scenarios:

(1) Existing Traffic Conditions
(2) Existing Plus Project Traffic Conditions
(3) Future (Year 2021) Without Project Traffic Conditions (Existing plus ambient growth & related projects)
(4) Future (Year 2021) With Project Traffic Conditions

Based on the City's significance criteria, none of the signalized intersections would have significant impacts as a result of Project traffic.

However, the intersection of California Avenue and Jackson Street would have an increase in intersection delay (during the PM Peak) that exceeds the City's threshold for significance. This impact however, could be mitigated by signalizing the intersection.

Proposed TDM Measures

In addition to the proposed signalization of the two stop controlled intersections, the following TDM measures are recommended for the Project to reduce project trips and enhance the quality of life for the Project's tenants:

1. Long term bicycle racks to provide secure bicycle parking for the residents
2. The Project leasing office to provide public transit information (Metro, Beeline, etc.)
3. Designate shared car parking spaces such as "zip car"
4. Delivery locker facilities for product deliveries and grocery deliveries
5. Laundry lockers for dry cleaning pick up and deliveries

APPENDIX A

Manual Traffic Counts

CITY TRAFFIC COUNTERS

www.ctcounters.com

File Name : Brand_California
Site Code : 00000000
Start Date : 12/1/2016
Page No : 1

Groups Printed- Unshifted

	Brand Blvd Southbound			California Ave Westbound			Brand Blvd Northbound			California Ave Eastbound			
Start Time	Left	Thru	Right	Left	Thru	Right	Left	Thru	Right	Left	Thru	Right	Int. Total
07:00 AM	7	95	20	8	14	5	2	57	4	2	14	4	232
07:15 AM	13	134	15	9	17	8	6	73	7	4	12	5	303
07:30 AM	7	135	25	16	28	10	10	103	6	9	26	12	387
07:45 AM	10	171	18	15	36	12	11	95	15	6	30	12	431
Total	37	535	78	48	95	35	29	328	32	21	82	33	1353
08:00 AM	8	142	18	8	43	17	8	128	10	5	34	6	427
08:15 AM	9	174	16	10	39	11	14	96	10	6	30	9	424
08:30 AM	7	136	43	2	45	9	11	104	13	7	28	19	424
08:45 AM	10	161	35	8	41	15	16	122	5	9	46	9	477
Total	34	613	112	28	168	52	49	450	38	27	138	43	1752
04:00 PM	18	198	22	14	48	14	15	149	17	9	54	14	572
04:15 PM	18	175	25	11	52	19	15	173	19	10	56	20	593
04:30 PM	15	219	29	11	35	29	18	171	17	19	49	8	620
04:45 PM	17	170	23	6	67	21	14	152	14	9	59	15	567
Total	68	762	99	42	202	83	62	645	67	47	218	57	2352
05:00 PM	17	190	34	7	58	12	17	119	18	9	55	17	553
05:15 PM	7	194	18	8	57	20	11	145	19	16	60	10	565
05:30 PM	14	194	22	5	56	14	19	126	11	10	61	17	549
05:45 PM	14	211	33	15	49	14	8	142	19	8	65	15	593
Total	52	789	107	35	220	60	55	532	67	43	241	59	2260
Grand Total	191	2699	396	153	685	230	195	1955	204	138	679	192	7717
Apprch %	5.8	82.1	12.1	14.3	64.1	21.5	8.3	83.1	8.7	13.7	67.3	19	
Total %	2.5	35	5.1	2	8.9	3	2.5	25.3	2.6	1.8	8.8	2.5	

CITY TRAFFIC COUNTERS

www.ctcounters.com

File Name : Brand_California
Site Code : 00000000
Start Date : 12/1/2016
Page No : 2

	Brand Blvd Southbound				California Ave Westbound				Brand Blvd Northbound				California Ave Eastbound				
Start Time	Left	Thru	Right	App. Total	Left	Thru	Right	App. Total	Left	Thru	Right	App. Total	Left	Thru	Right	App. Total	Int. Total
Peak Hour Analysis From 07:00 AM to 11:45 AM - Peak 1 of 1																	
Peak Hour for Entire Intersection Begins at 08:00 AM																	
08:00 AM	8	142	18	168	8	43	**17**	**68**	8	**128**	10	**146**	5	34	6	45	427
08:15 AM	9	**174**	16	199	**10**	39	11	60	14	96	10	120	6	30	9	45	424
08:30 AM	7	136	**43**	186	2	**45**	9	56	11	104	**13**	128	7	28	**19**	54	424
08:45 AM	**10**	161	35	**206**	8	41	15	64	**16**	122	5	143	**9**	**46**	9	**64**	**477**
Total Volume	34	613	112	759	28	168	52	248	49	450	38	537	27	138	43	208	1752
% App. Total	4.5	80.8	14.8		11.3	67.7	21		9.1	83.8	7.1		13	66.3	20.7		
PHF	.850	.881	.651	.921	.700	.933	.765	.912	.766	.879	.731	.920	.750	.750	.566	.813	.918

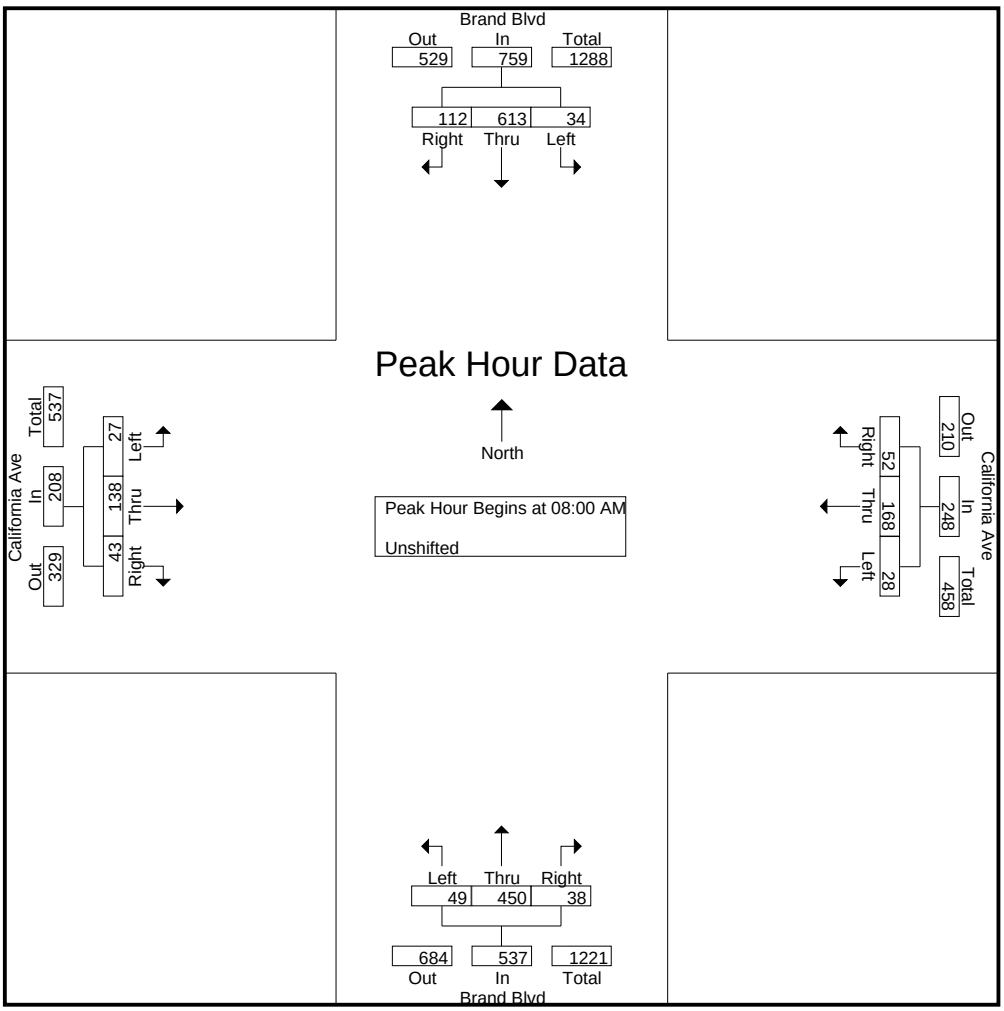

CITY TRAFFIC COUNTERS

www.ctcounters.com

File Name : Brand_California
Site Code : 00000000
Start Date : 12/1/2016
Page No : 3

	Brand Blvd Southbound				California Ave Westbound				Brand Blvd Northbound				California Ave Eastbound				
Start Time	Left	Thru	Right	App. Total	Left	Thru	Right	App. Total	Left	Thru	Right	App. Total	Left	Thru	Right	App. Total	Int. Total
Peak Hour Analysis From 12:00 PM to 05:45 PM - Peak 1 of 1																	
Peak Hour for Entire Intersection Begins at 04:00 PM																	
04:00 PM	**18**	198	22	238	**14**	48	14	76	15	149	17	181	9	54	14	77	572
04:15 PM	18	175	25	218	11	52	19	82	15	**173**	**19**	**207**	10	56	**20**	**86**	593
04:30 PM	15	**219**	**29**	**263**	11	35	**29**	75	**18**	171	17	206	**19**	49	8	76	**620**
04:45 PM	17	170	23	210	6	**67**	21	**94**	14	152	14	180	9	**59**	15	83	567
Total Volume	68	762	99	929	42	202	83	327	62	645	67	774	47	218	57	322	2352
% App. Total	7.3	82	10.7		12.8	61.8	25.4		8	83.3	8.7		14.6	67.7	17.7		
PHF	.944	.870	.853	.883	.750	.754	.716	.870	.861	.932	.882	.935	.618	.924	.713	.936	.948

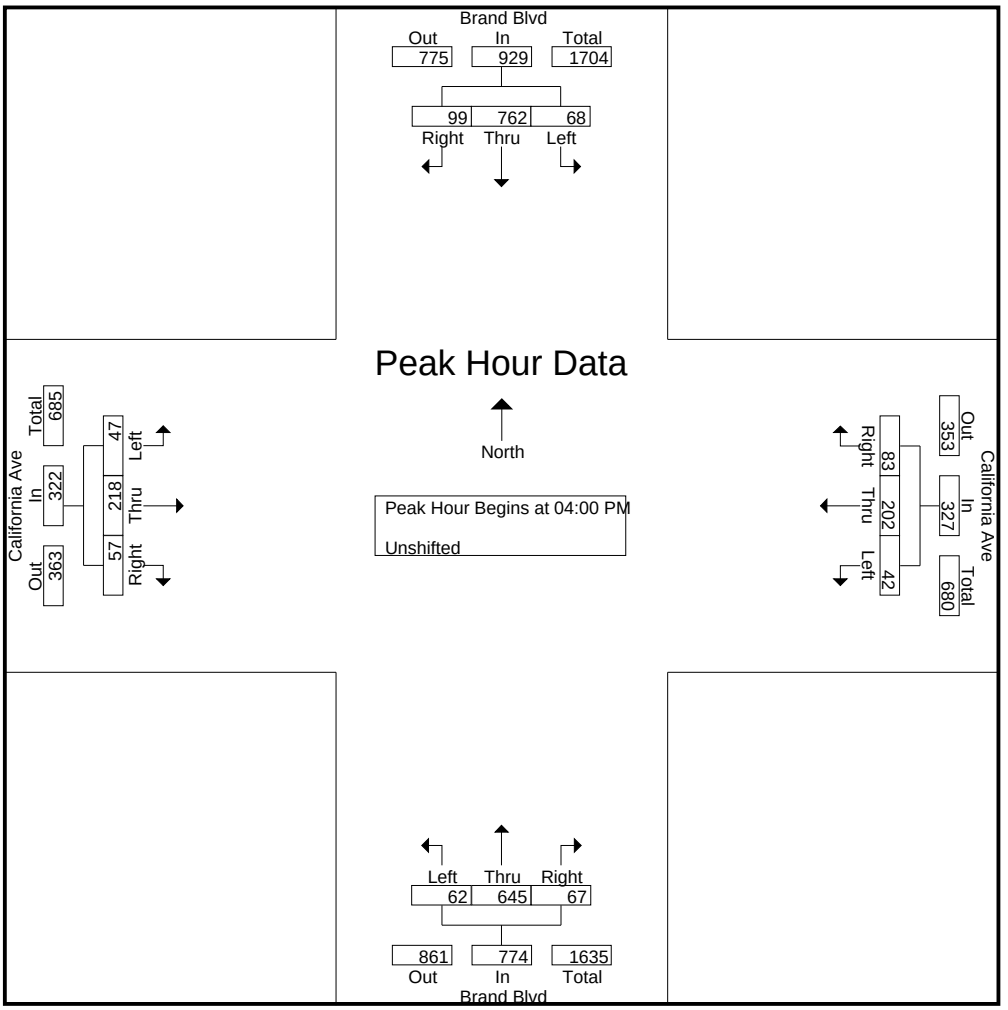

CITY TRAFFIC COUNTERS

www.ctcounters.com

File Name : Maryland_California
Site Code : 00000000
Start Date : 12/1/2016
Page No : 1

Groups Printed- Unshifted

	Maryland Ave Southbound			California Ave Westbound			Maryland Ave Northbound			California Ave Eastbound			
Start Time	Left	Thru	Right	Left	Thru	Right	Left	Thru	Right	Left	Thru	Right	Int. Total
07:00 AM	0	2	1	4	15	1	2	5	4	2	16	3	55
07:15 AM	0	5	1	7	18	5	3	13	12	0	25	4	93
07:30 AM	4	7	0	3	32	3	2	13	11	0	34	7	116
07:45 AM	1	11	2	8	40	5	7	19	4	4	61	21	183
Total	5	25	4	22	105	14	14	50	31	6	136	35	447
08:00 AM	2	12	0	10	37	4	1	16	5	1	68	18	174
08:15 AM	2	12	0	7	35	3	1	16	6	3	46	14	145
08:30 AM	5	6	1	6	34	7	3	28	6	4	45	18	163
08:45 AM	4	13	0	10	34	12	4	22	8	7	46	11	171
Total	13	43	1	33	140	26	9	82	25	15	205	61	653
04:00 PM	8	15	8	11	52	12	9	27	10	8	52	10	222
04:15 PM	5	20	7	6	64	10	10	41	15	15	51	9	253
04:30 PM	11	14	10	3	66	7	8	37	20	4	49	7	236
04:45 PM	3	16	10	4	61	10	12	53	13	7	72	9	270
Total	27	65	35	24	243	39	39	158	58	34	224	35	981
05:00 PM	5	21	9	1	74	6	21	57	21	4	49	16	284
05:15 PM	2	21	7	6	48	20	26	53	8	4	77	10	282
05:30 PM	5	17	7	5	75	11	21	58	5	8	41	15	268
05:45 PM	6	20	5	8	71	11	12	32	11	6	58	9	249
Total	18	79	28	20	268	48	80	200	45	22	225	50	1083
Grand Total	63	212	68	99	756	127	142	490	159	77	790	181	3164
Apprch %	18.4	61.8	19.8	10.1	77	12.9	18	61.9	20.1	7.3	75.4	17.3	
Total %	2	6.7	2.1	3.1	23.9	4	4.5	15.5	5	2.4	25	5.7	

CITY TRAFFIC COUNTERS

www.ctcounters.com

File Name : Maryland_California
Site Code : 00000000
Start Date : 12/1/2016
Page No : 2

	Maryland Ave Southbound				California Ave Westbound				Maryland Ave Northbound				California Ave Eastbound				
Start Time	Left	Thru	Right	App. Total	Left	Thru	Right	App. Total	Left	Thru	Right	App. Total	Left	Thru	Right	App. Total	Int. Total
Peak Hour Analysis From 07:00 AM to 11:45 AM - Peak 1 of 1																	
Peak Hour for Entire Intersection Begins at 07:45 AM																	
07:45 AM	1	11	**2**	**14**	8	**40**	5	**53**	**7**	19	4	30	**4**	61	**21**	86	**183**
08:00 AM	2	**12**	0	14	**10**	37	4	51	1	16	5	22	1	**68**	18	**87**	174
08:15 AM	2	12	0	14	7	35	3	45	1	16	**6**	23	3	46	14	63	145
08:30 AM	**5**	6	1	12	6	34	**7**	47	3	**28**	6	**37**	4	45	18	67	163
Total Volume	10	41	3	54	31	146	19	196	12	79	21	112	12	220	71	303	665
% App. Total	18.5	75.9	5.6		15.8	74.5	9.7		10.7	70.5	18.8		4	72.6	23.4		
PHF	.500	.854	.375	.964	.775	.913	.679	.925	.429	.705	.875	.757	.750	.809	.845	.871	.908

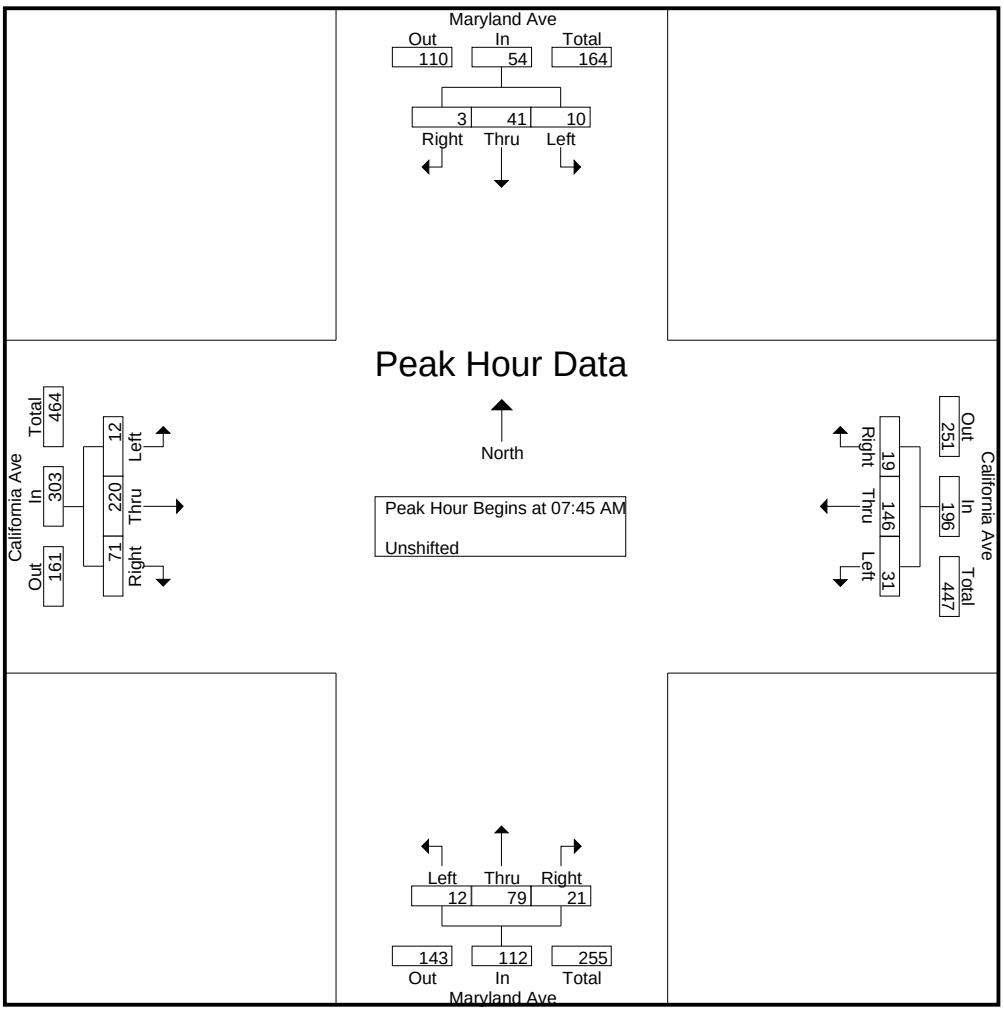

CITY TRAFFIC COUNTERS

www.ctcounters.com

File Name : Maryland_California
Site Code : 00000000
Start Date : 12/1/2016
Page No : 3

	Maryland Ave Southbound				California Ave Westbound				Maryland Ave Northbound				California Ave Eastbound				
Start Time	Left	Thru	Right	App. Total	Left	Thru	Right	App. Total	Left	Thru	Right	App. Total	Left	Thru	Right	App. Total	Int. Total
Peak Hour Analysis From 12:00 PM to 05:45 PM - Peak 1 of 1																	
Peak Hour for Entire Intersection Begins at 04:45 PM																	
04:45 PM	3	16	**10**	29	4	61	10	75	12	53	13	78	7	72	9	88	270
05:00 PM	**5**	**21**	9	**35**	1	74	6	81	21	57	**21**	**99**	4	49	**16**	69	**284**
05:15 PM	2	21	7	30	**6**	48	**20**	74	**26**	53	8	87	4	**77**	10	**91**	282
05:30 PM	5	17	7	29	5	**75**	11	**91**	21	**58**	5	84	**8**	41	15	64	268
Total Volume	15	75	33	123	16	258	47	321	80	221	47	348	23	239	50	312	1104
% App. Total	12.2	61	26.8		5	80.4	14.6		23	63.5	13.5		7.4	76.6	16		
PHF	.750	.893	.825	.879	.667	.860	.588	.882	.769	.953	.560	.879	.719	.776	.781	.857	.972

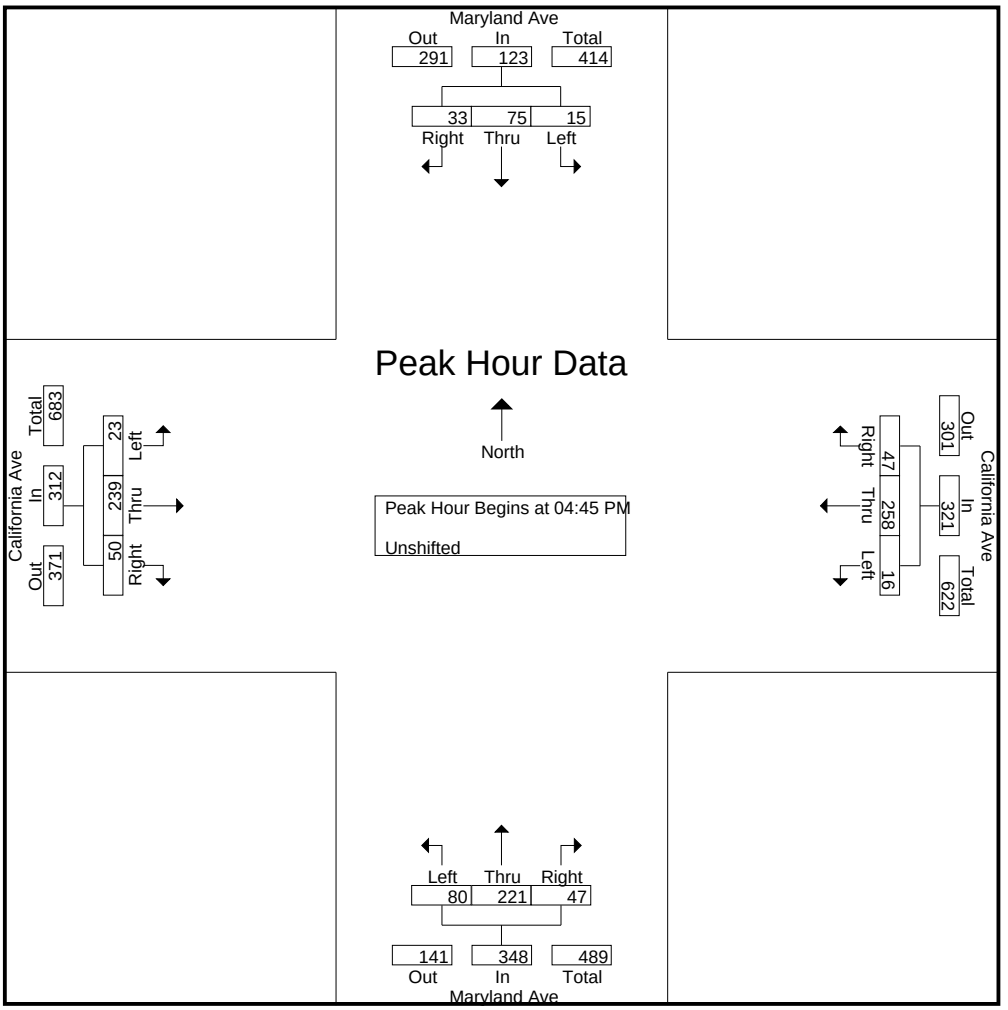

CITY TRAFFIC COUNTERS

www.ctcounters.com

File Name : Louise_California
Site Code : 00000000
Start Date : 4/12/2017
Page No : 1

Groups Printed- Unshifted

	Louise St Southbound			California Ave Westbound			Louise St Northbound			California Ave Eastbound			
Start Time	Left	Thru	Right	Left	Thru	Right	Left	Thru	Right	Left	Thru	Right	Int. Total
07:00 AM	1	23	0	4	22	4	2	19	2	1	14	0	92
07:15 AM	1	27	3	1	23	1	2	22	2	1	16	2	101
07:30 AM	6	34	9	1	30	6	3	27	4	7	26	9	162
07:45 AM	14	52	6	2	40	4	4	30	9	4	51	4	220
Total	22	136	18	8	115	15	11	98	17	13	107	15	575
08:00 AM	15	54	7	2	73	10	8	24	5	4	28	3	233
08:15 AM	12	51	9	5	72	7	6	33	1	7	36	4	243
08:30 AM	6	47	9	7	54	8	9	31	5	4	37	2	219
08:45 AM	5	63	11	9	56	7	8	23	2	3	29	5	221
Total	38	215	36	23	255	32	31	111	13	18	130	14	916
04:00 PM	8	51	7	7	51	9	7	39	11	10	67	10	277
04:15 PM	6	53	4	4	50	7	10	37	8	6	63	9	257
04:30 PM	9	61	4	5	40	8	5	50	5	2	70	8	267
04:45 PM	13	50	4	2	64	7	9	50	8	5	66	14	292
Total	36	215	19	18	205	31	31	176	32	23	266	41	1093
05:00 PM	15	61	8	5	57	9	9	69	7	6	88	8	342
05:15 PM	11	66	7	4	58	5	8	67	13	7	73	11	330
05:30 PM	21	51	7	5	58	13	11	68	6	7	75	10	332
05:45 PM	13	66	8	4	44	8	6	62	14	8	75	7	315
Total	60	244	30	18	217	35	34	266	40	28	311	36	1319
06:00 PM	10	57	5	5	56	6	18	65	9	10	74	8	323
06:15 PM	9	48	6	4	62	4	5	46	12	5	66	3	270
Grand Total	175	915	114	76	910	123	130	762	123	97	954	117	4496
Apprch %	14.5	76	9.5	6.9	82.1	11.1	12.8	75.1	12.1	8.3	81.7	10	
Total %	3.9	20.4	2.5	1.7	20.2	2.7	2.9	16.9	2.7	2.2	21.2	2.6	

CITY TRAFFIC COUNTERS

www.ctcounters.com

File Name : Louise_California
Site Code : 00000000
Start Date : 4/12/2017
Page No : 2

	Louise St Southbound				California Ave Westbound				Louise St Northbound				California Ave Eastbound				
Start Time	Left	Thru	Right	App. Total	Left	Thru	Right	App. Total	Left	Thru	Right	App. Total	Left	Thru	Right	App. Total	Int. Total
Peak Hour Analysis From 07:00 AM to 11:45 AM - Peak 1 of 1																	
Peak Hour for Entire Intersection Begins at 08:00 AM																	
08:00 AM	**15**	54	7	76	2	**73**	**10**	**85**	8	24	**5**	37	4	28	3	35	233
08:15 AM	12	51	9	72	5	72	7	84	6	**33**	1	40	**7**	36	4	**47**	**243**
08:30 AM	6	47	9	62	7	54	8	69	**9**	31	5	**45**	4	**37**	2	43	219
08:45 AM	5	**63**	**11**	**79**	**9**	56	7	72	8	23	2	33	3	29	**5**	37	221
Total Volume	38	215	36	289	23	255	32	310	31	111	13	155	18	130	14	162	916
% App. Total	13.1	74.4	12.5		7.4	82.3	10.3		20	71.6	8.4		11.1	80.2	8.6		
PHF	.633	.853	.818	.915	.639	.873	.800	.912	.861	.841	.650	.861	.643	.878	.700	.862	.942

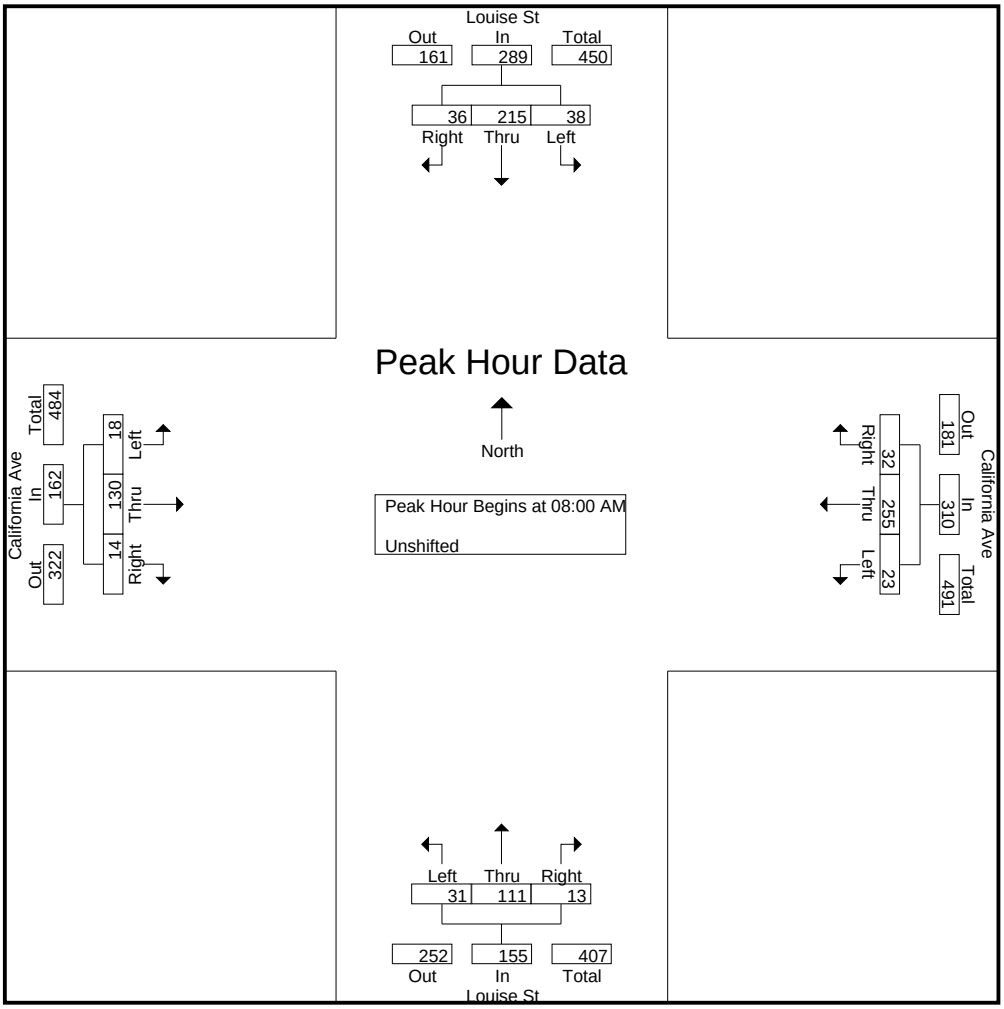

CITY TRAFFIC COUNTERS

www.ctcounters.com

File Name : Louise_California
Site Code : 00000000
Start Date : 4/12/2017
Page No : 3

	Louise St Southbound				California Ave Westbound				Louise St Northbound				California Ave Eastbound				
Start Time	Left	Thru	Right	App. Total	Left	Thru	Right	App. Total	Left	Thru	Right	App. Total	Left	Thru	Right	App. Total	Int. Total
Peak Hour Analysis From 12:00 PM to 06:15 PM - Peak 1 of 1																	
Peak Hour for Entire Intersection Begins at 05:00 PM																	
05:00 PM	15	61	**8**	84	**5**	57	9	71	9	**69**	7	85	6	**88**	8	**102**	**342**
05:15 PM	11	**66**	7	84	4	**58**	5	67	8	67	13	**88**	7	73	**11**	91	330
05:30 PM	**21**	51	7	79	5	58	**13**	**76**	**11**	68	6	85	7	75	10	92	332
05:45 PM	13	66	8	**87**	4	44	8	56	6	62	**14**	82	**8**	75	7	90	315
Total Volume	60	244	30	334	18	217	35	270	34	266	40	340	28	311	36	375	1319
% App. Total	18	73.1	9		6.7	80.4	13		10	78.2	11.8		7.5	82.9	9.6		
PHF	.714	.924	.938	.960	.900	.935	.673	.888	.773	.964	.714	.966	.875	.884	.818	.919	.964

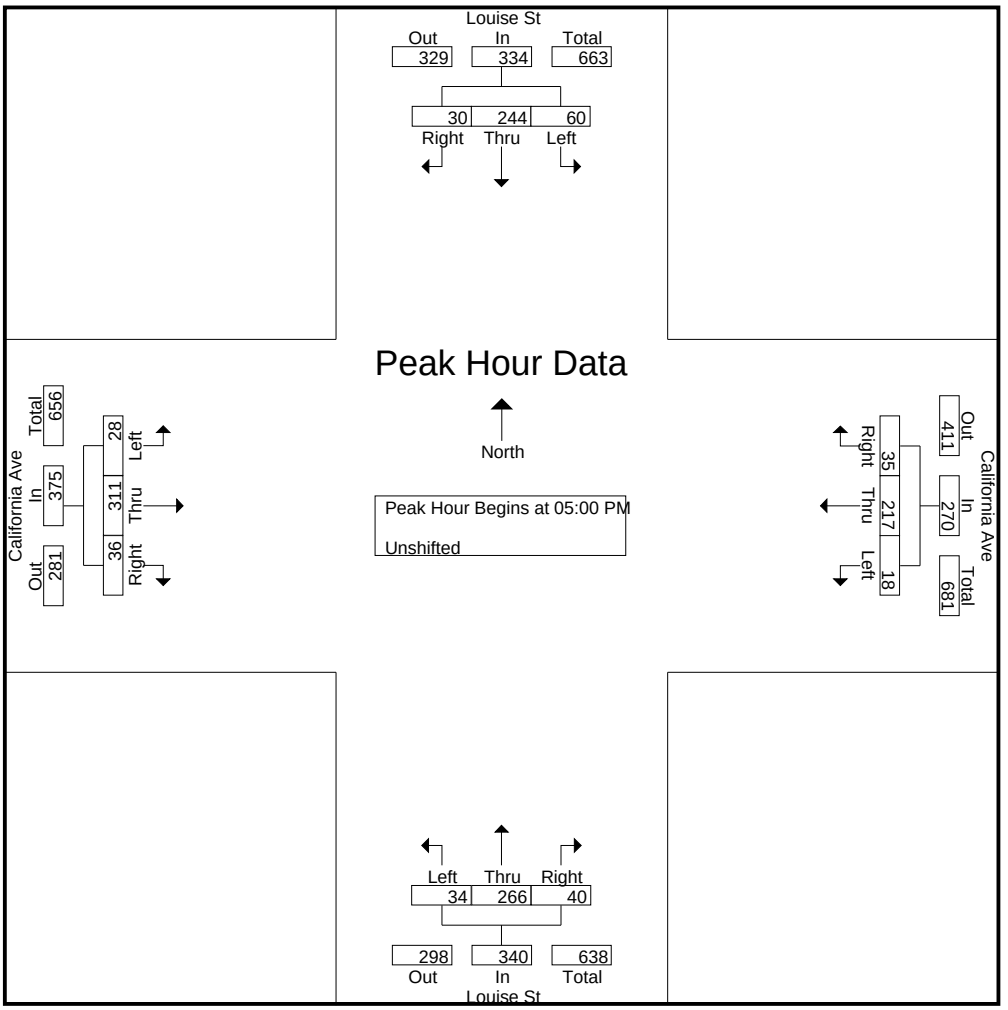

CITY TRAFFIC COUNTERS

www.ctcounters.com

File Name : Kenwood_California
Site Code : 00000000
Start Date : 9/26/2017
Page No : 1

Groups Printed- Unshifted

	Kenwood St Southbound				California Ave Westbound				Kenwood St Northbound				California Ave Eastbound				
Start Time	Left	Thru	Right	App. Total	Left	Thru	Right	App. Total	Left	Thru	Right	App. Total	Left	Thru	Right	App. Total	Int. Total
07:00 AM	2	10	1	13	0	21	1	22	2	3	0	5	0	17	3	20	60
07:15 AM	6	10	1	17	0	18	1	19	4	3	5	12	3	22	2	27	75
07:30 AM	3	21	4	28	2	39	1	42	4	14	7	25	3	36	5	44	139
07:45 AM	9	31	3	43	3	71	3	77	7	17	15	39	5	45	17	67	226
Total	20	72	9	101	5	149	6	160	17	37	27	81	11	120	27	158	500
08:00 AM	4	9	6	19	1	79	2	82	4	8	10	22	2	31	6	39	162
08:15 AM	4	13	3	20	5	84	8	97	4	8	4	16	4	23	3	30	163
08:30 AM	4	18	4	26	2	57	0	59	6	9	5	20	2	37	4	43	148
08:45 AM	1	9	2	12	5	69	4	78	3	5	9	17	0	41	3	44	151
Total	13	49	15	77	13	289	14	316	17	30	28	75	8	132	16	156	624
03:00 PM	3	5	3	11	2	56	1	59	7	14	1	22	3	63	2	68	160
03:15 PM	3	11	0	14	2	61	6	69	8	15	3	26	2	68	4	74	183
03:30 PM	1	6	3	10	5	53	2	60	4	18	4	26	6	64	11	81	177
03:45 PM	4	5	2	11	5	53	0	58	4	11	8	23	3	69	4	76	168
Total	11	27	8	46	14	223	9	246	23	58	16	97	14	264	21	299	688
04:00 PM	2	10	8	20	5	67	5	77	1	18	8	27	4	71	2	77	201
04:15 PM	6	16	4	26	5	70	2	77	9	21	6	36	3	77	2	82	221
04:30 PM	2	12	2	16	4	51	1	56	4	18	6	28	3	81	2	86	186
04:45 PM	5	18	1	24	2	66	6	74	8	17	2	27	3	78	6	87	212
Total	15	56	15	86	16	254	14	284	22	74	22	118	13	307	12	332	820
05:00 PM	0	11	5	16	3	84	2	89	13	24	15	52	4	73	1	78	235
05:15 PM	2	12	2	16	2	60	2	64	16	29	13	58	5	88	10	103	241
05:30 PM	3	20	4	27	2	66	2	70	3	21	6	30	6	98	4	108	235
05:45 PM	0	7	3	10	3	76	1	80	2	17	5	24	5	75	3	83	197
Total	5	50	14	69	10	286	7	303	34	91	39	164	20	334	18	372	908
06:00 PM	0	13	3	16	1	73	3	77	7	19	6	32	3	90	7	100	225
06:15 PM	4	13	2	19	4	70	3	77	4	15	7	26	6	77	1	84	206
06:30 PM	2	10	5	17	2	76	5	83	4	9	5	18	4	73	3	80	198
06:45 PM	2	9	7	18	2	53	3	58	2	14	4	20	2	55	2	59	155
Total	8	45	17	70	9	272	14	295	17	57	22	96	15	295	13	323	784
Grand Total	72	299	78	449	67	1473	64	1604	130	347	154	631	81	1452	107	1640	4324
Apprch %	16	66.6	17.4		4.2	91.8	4		20.6	55	24.4		4.9	88.5	6.5		
Total %	1.7	6.9	1.8	10.4	1.5	34.1	1.5	37.1	3	8	3.6	14.6	1.9	33.6	2.5	37.9	

CITY TRAFFIC COUNTERS

www.ctcounters.com

File Name : Kenwood_California
Site Code : 00000000
Start Date : 9/26/2017
Page No : 2

	Kenwood St Southbound				California Ave Westbound				Kenwood St Northbound				California Ave Eastbound				
Start Time	Left	Thru	Right	App. Total	Left	Thru	Right	App. Total	Left	Thru	Right	App. Total	Left	Thru	Right	App. Total	Int. Total
Peak Hour Analysis From 07:00 AM to 11:45 AM - Peak 1 of 1																	
Peak Hour for Entire Intersection Begins at 07:45 AM																	
07:45 AM	**9**	**31**	3	**43**	3	71	3	77	**7**	**17**	**15**	**39**	**5**	**45**	**17**	**67**	**226**
08:00 AM	4	9	**6**	19	1	79	2	82	4	8	10	22	2	31	6	39	162
08:15 AM	4	13	3	20	**5**	**84**	**8**	**97**	4	8	4	16	4	23	3	30	163
08:30 AM	4	18	4	26	2	57	0	59	6	9	5	20	2	37	4	43	148
Total Volume	21	71	16	108	11	291	13	315	21	42	34	97	13	136	30	179	699
% App. Total	19.4	65.7	14.8		3.5	92.4	4.1		21.6	43.3	35.1		7.3	76	16.8		
PHF	.583	.573	.667	.628	.550	.866	.406	.812	.750	.618	.567	.622	.650	.756	.441	.668	.773

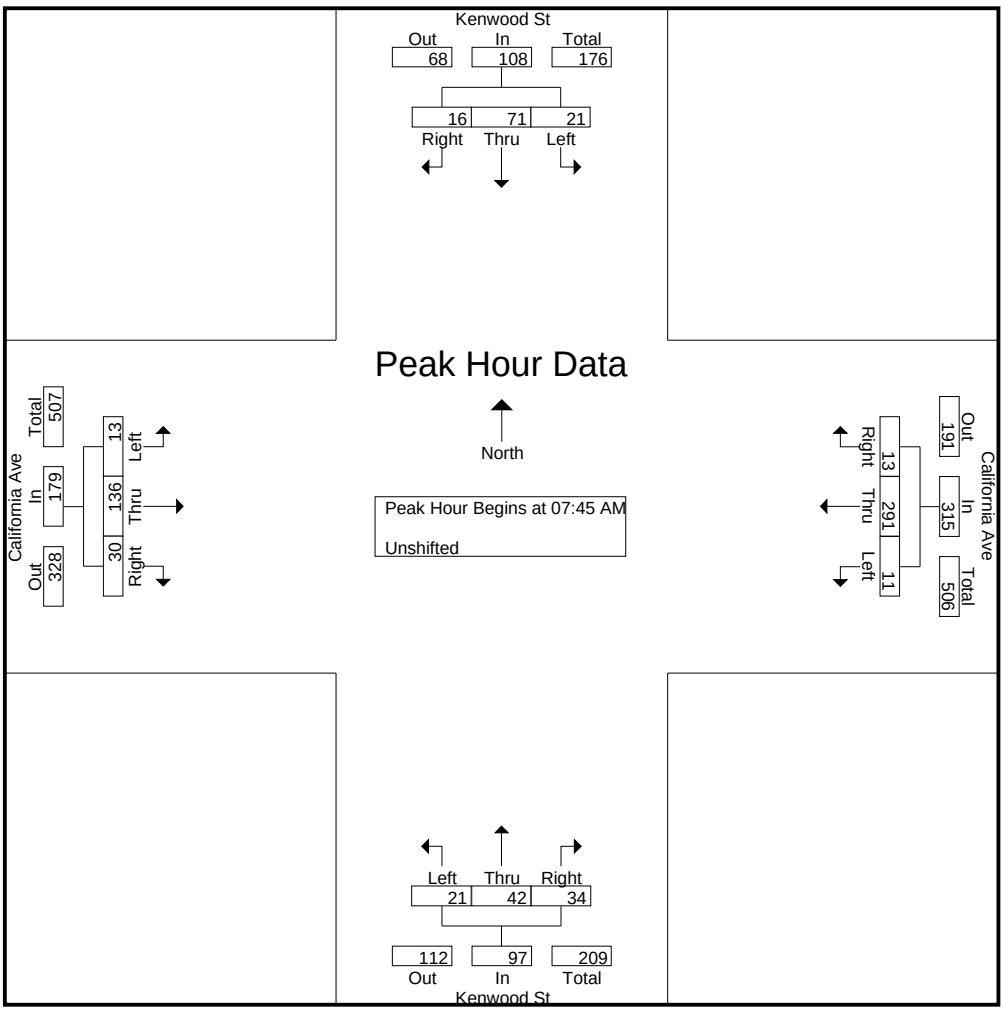

CITY TRAFFIC COUNTERS

www.ctcounters.com

File Name : Kenwood_California
Site Code : 00000000
Start Date : 9/26/2017
Page No : 3

	Kenwood St Southbound				California Ave Westbound				Kenwood St Northbound				California Ave Eastbound				
Start Time	Left	Thru	Right	App. Total	Left	Thru	Right	App. Total	Left	Thru	Right	App. Total	Left	Thru	Right	App. Total	Int. Total
Peak Hour Analysis From 12:00 PM to 06:45 PM - Peak 1 of 1																	
Peak Hour for Entire Intersection Begins at 04:45 PM																	
04:45 PM	**5**	18	1	24	2	66	**6**	74	8	17	2	27	3	78	6	87	212
05:00 PM	0	11	**5**	16	**3**	**84**	2	**89**	13	24	**15**	52	4	73	1	78	235
05:15 PM	2	12	2	16	2	60	2	64	**16**	**29**	13	**58**	5	88	**10**	103	**241**
05:30 PM	3	**20**	4	**27**	2	66	2	70	3	21	6	30	**6**	**98**	4	**108**	235
Total Volume	10	61	12	83	9	276	12	297	40	91	36	167	18	337	21	376	923
% App. Total	12	73.5	14.5		3	92.9	4		24	54.5	21.6		4.8	89.6	5.6		
PHF	.500	.763	.600	.769	.750	.821	.500	.834	.625	.784	.600	.720	.750	.860	.525	.870	.957

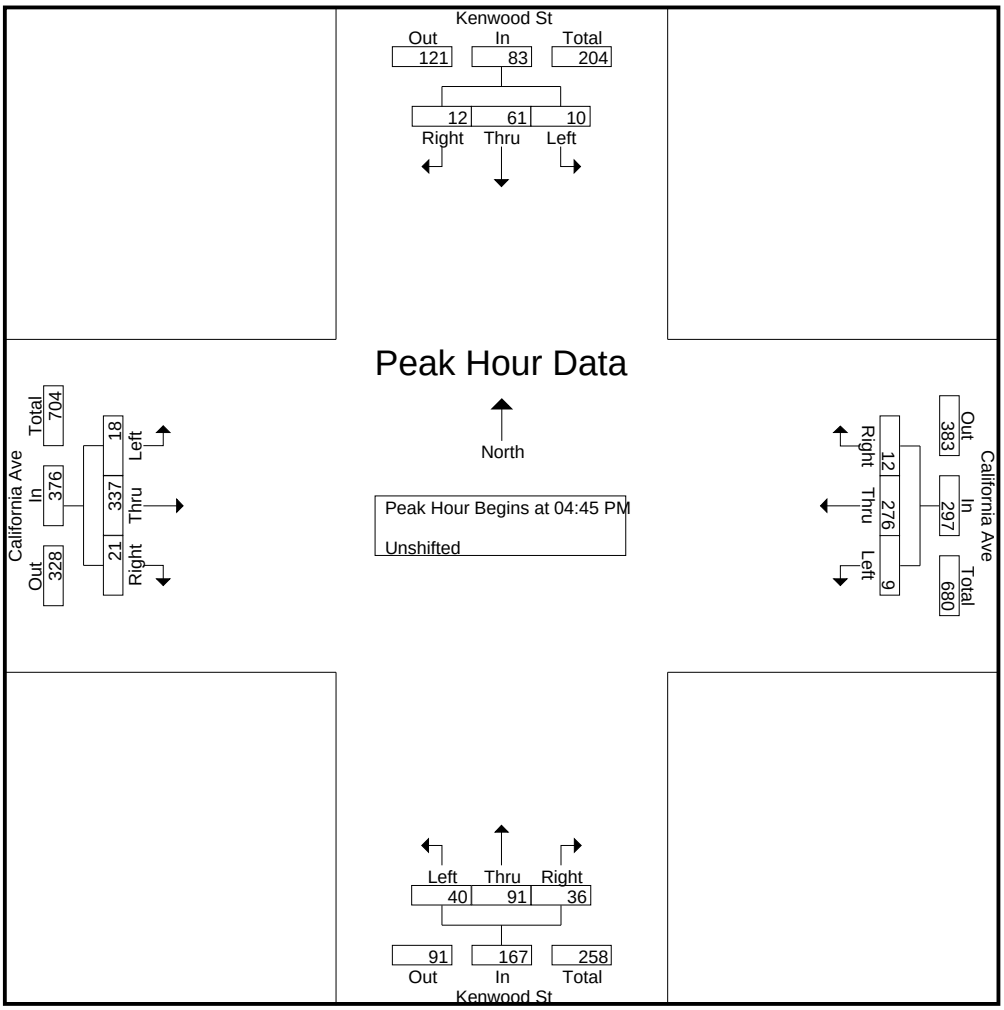

CITY TRAFFIC COUNTERS

www.ctcounters.com

File Name : Jackson_California
Site Code : 00000000
Start Date : 9/26/2017
Page No : 1

Groups Printed- Unshifted

	Jackson St Southbound				California Ave Westbound				Jackson St Northbound				California Ave Eastbound				
Start Time	Left	Thru	Right	App. Total	Left	Thru	Right	App. Total	Left	Thru	Right	App. Total	Left	Thru	Right	App. Total	Int. Total
07:00 AM	3	42	0	45	5	18	3	26	3	12	2	17	0	16	1	17	105
07:15 AM	4	56	1	61	11	17	4	32	2	24	6	32	2	26	6	34	159
07:30 AM	14	75	1	90	11	37	14	62	5	35	3	43	3	37	8	48	243
07:45 AM	13	83	7	103	14	65	13	92	5	28	9	42	4	61	7	72	309
Total	34	256	9	299	41	137	34	212	15	99	20	134	9	140	22	171	816
08:00 AM	13	70	5	88	11	75	13	99	4	37	8	49	2	39	7	48	284
08:15 AM	8	61	3	72	11	84	7	102	7	45	5	57	1	27	6	34	265
08:30 AM	11	52	4	67	8	57	4	69	4	37	3	44	4	41	4	49	229
08:45 AM	8	59	4	71	4	65	15	84	8	36	5	49	6	38	8	52	256
Total	40	242	16	298	34	281	39	354	23	155	21	199	13	145	25	183	1034
03:00 PM	15	53	1	69	12	56	7	75	5	43	14	62	2	55	8	65	271
03:15 PM	10	57	3	70	9	58	10	77	2	46	14	62	6	56	6	68	277
03:30 PM	8	55	7	70	8	44	14	66	5	51	9	65	2	55	3	60	261
03:45 PM	9	50	8	67	3	50	10	63	5	38	7	50	2	72	6	80	260
Total	42	215	19	276	32	208	41	281	17	178	44	239	12	238	23	273	1069
04:00 PM	6	44	8	58	5	59	13	77	8	52	20	80	4	75	3	82	297
04:15 PM	6	54	3	63	8	62	8	78	4	46	9	59	6	77	10	93	293
04:30 PM	11	48	4	63	3	46	9	58	4	49	15	68	4	86	4	94	283
04:45 PM	9	51	1	61	2	57	7	66	4	69	15	88	5	78	4	87	302
Total	32	197	16	245	18	224	37	279	20	216	59	295	19	316	21	356	1175
05:00 PM	16	54	3	73	3	73	16	92	10	77	13	100	7	74	6	87	352
05:15 PM	13	72	3	88	4	56	16	76	4	81	16	101	4	93	4	101	366
05:30 PM	12	57	3	72	7	64	14	85	2	83	17	102	6	97	3	106	365
05:45 PM	21	60	6	87	4	76	16	96	7	60	12	79	2	81	2	85	347
Total	62	243	15	320	18	269	62	349	23	301	58	382	19	345	15	379	1430
06:00 PM	11	48	7	66	3	67	18	88	3	78	10	91	10	85	0	95	340
06:15 PM	16	47	5	68	5	66	10	81	6	53	6	65	10	67	1	78	292
06:30 PM	11	43	3	57	4	77	16	97	4	52	11	67	2	82	3	87	308
06:45 PM	15	33	4	52	5	52	13	70	5	65	11	81	2	49	7	58	261
Total	53	171	19	243	17	262	57	336	18	248	38	304	24	283	11	318	1201
Grand Total	263	1324	94	1681	160	1381	270	1811	116	1197	240	1553	96	1467	117	1680	6725
Apprch %	15.6	78.8	5.6		8.8	76.3	14.9		7.5	77.1	15.5		5.7	87.3	7		
Total %	3.9	19.7	1.4	25	2.4	20.5	4	26.9	1.7	17.8	3.6	23.1	1.4	21.8	1.7	25	

CITY TRAFFIC COUNTERS

www.ctcounters.com

File Name : Jackson_California
Site Code : 00000000
Start Date : 9/26/2017
Page No : 2

	Jackson St Southbound				California Ave Westbound				Jackson St Northbound				California Ave Eastbound				
Start Time	Left	Thru	Right	App. Total	Left	Thru	Right	App. Total	Left	Thru	Right	App. Total	Left	Thru	Right	App. Total	Int. Total
Peak Hour Analysis From 07:00 AM to 11:45 AM - Peak 1 of 1																	
Peak Hour for Entire Intersection Begins at 07:30 AM																	
07:30 AM	**14**	75	1	90	11	37	**14**	62	5	35	3	43	3	37	**8**	48	243
07:45 AM	13	**83**	**7**	**103**	**14**	65	13	92	5	28	**9**	42	**4**	**61**	7	**72**	**309**
08:00 AM	13	70	5	88	11	75	13	99	4	37	8	49	2	39	7	48	284
08:15 AM	8	61	3	72	11	**84**	7	**102**	**7**	**45**	5	**57**	1	27	6	34	265
Total Volume	48	289	16	353	47	261	47	355	21	145	25	191	10	164	28	202	1101
% App. Total	13.6	81.9	4.5		13.2	73.5	13.2		11	75.9	13.1		5	81.2	13.9		
PHF	.857	.870	.571	.857	.839	.777	.839	.870	.750	.806	.694	.838	.625	.672	.875	.701	.891

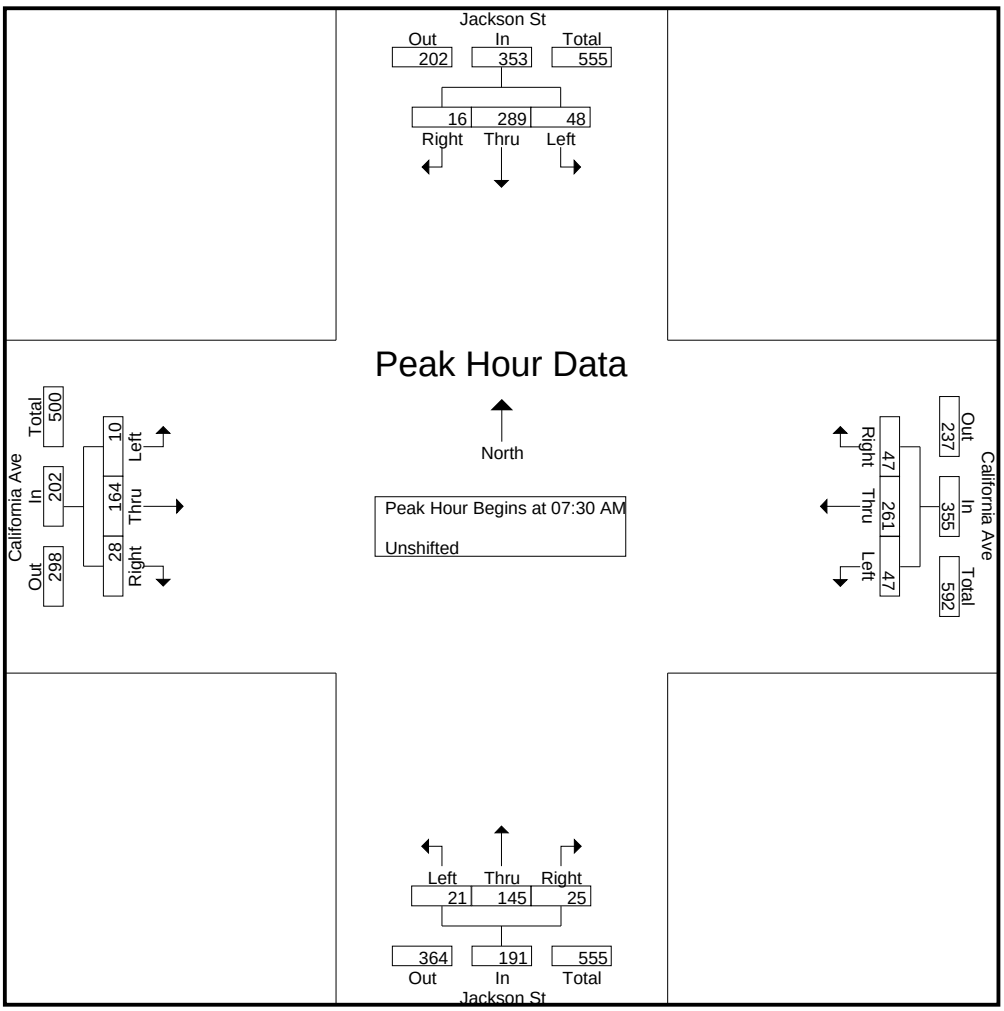

CITY TRAFFIC COUNTERS

www.ctcounters.com

File Name : Jackson_California
Site Code : 00000000
Start Date : 9/26/2017
Page No : 3

	Jackson St Southbound				California Ave Westbound				Jackson St Northbound				California Ave Eastbound				
Start Time	Left	Thru	Right	App. Total	Left	Thru	Right	App. Total	Left	Thru	Right	App. Total	Left	Thru	Right	App. Total	Int. Total
Peak Hour Analysis From 12:00 PM to 06:45 PM - Peak 1 of 1																	
Peak Hour for Entire Intersection Begins at 05:00 PM																	
05:00 PM	16	54	3	73	3	73	**16**	92	**10**	77	13	100	**7**	74	**6**	87	352
05:15 PM	13	**72**	3	**88**	4	56	16	76	4	81	16	101	4	93	4	101	**366**
05:30 PM	12	57	3	72	**7**	64	14	85	2	**83**	**17**	**102**	6	**97**	3	**106**	365
05:45 PM	**21**	60	**6**	87	4	**76**	16	**96**	7	60	12	79	2	81	2	85	347
Total Volume	62	243	15	320	18	269	62	349	23	301	58	382	19	345	15	379	1430
% App. Total	19.4	75.9	4.7		5.2	77.1	17.8		6	78.8	15.2		5	91	4		
PHF	.738	.844	.625	.909	.643	.885	.969	.909	.575	.907	.853	.936	.679	.889	.625	.894	.977

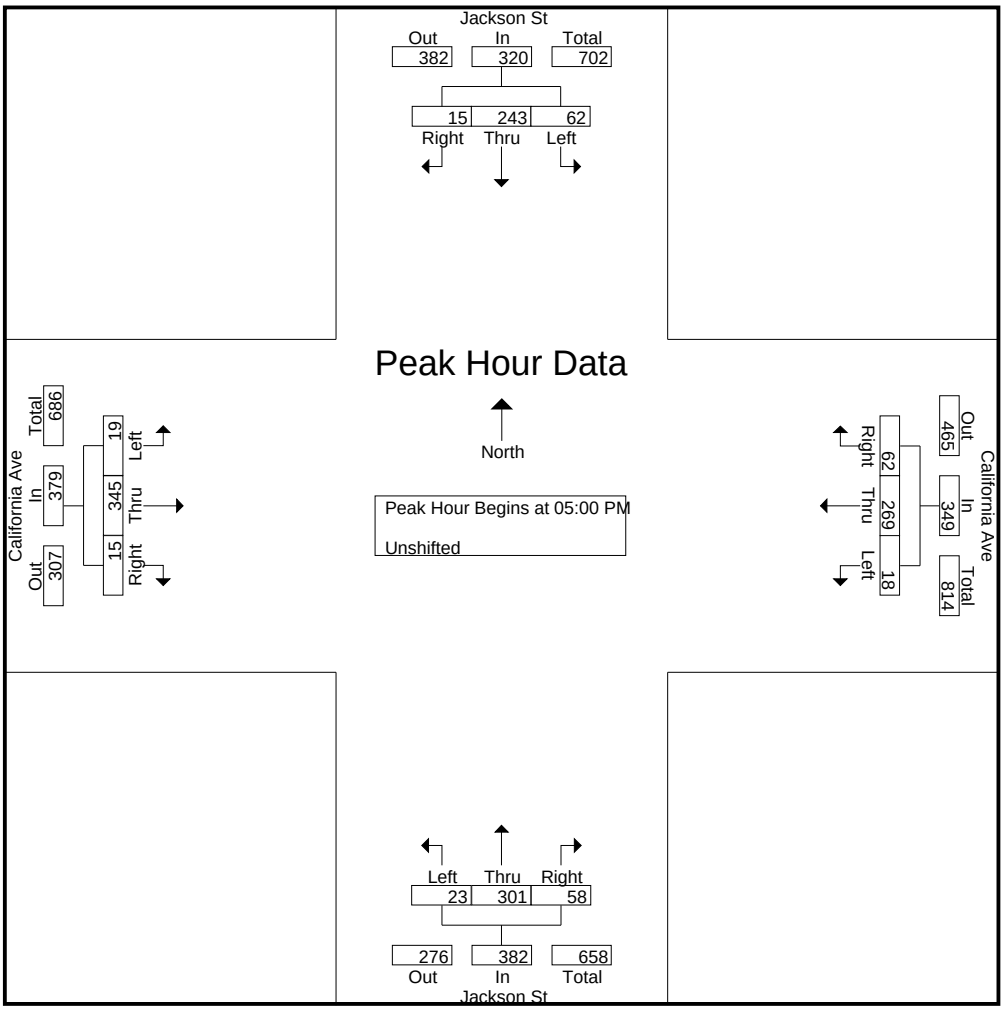

CITY TRAFFIC COUNTERS

www.ctcounters.com

File Name : Brand_Wilson
Site Code : 00000000
Start Date : 12/1/2016
Page No : 1

Groups Printed- Unshifted

	Brand Blvd Southbound			Wilson Ave Westbound			Brand Blvd Northbound			Wilson Ave Eastbound			
Start Time	Left	Thru	Right	Left	Thru	Right	Left	Thru	Right	Left	Thru	Right	Int. Total
07:00 AM	8	87	5	6	19	12	3	51	3	3	6	6	209
07:15 AM	12	124	7	10	26	6	9	73	12	6	11	2	298
07:30 AM	10	146	8	21	26	9	7	109	7	5	13	2	363
07:45 AM	14	153	13	18	30	9	9	106	14	3	12	2	383
Total	44	510	33	55	101	36	28	339	36	17	42	12	1253
08:00 AM	14	136	8	10	38	12	6	124	13	3	20	8	392
08:15 AM	13	142	13	17	33	7	14	112	8	5	12	4	380
08:30 AM	17	146	10	22	35	14	11	102	9	5	19	11	401
08:45 AM	22	131	13	14	54	16	12	118	7	5	11	8	411
Total	66	555	44	63	160	49	43	456	37	18	62	31	1584
04:00 PM	19	186	14	17	53	23	13	134	15	10	48	11	543
04:15 PM	35	157	15	15	71	24	15	165	28	11	38	15	589
04:30 PM	29	195	19	19	56	28	9	173	17	12	62	13	632
04:45 PM	23	159	11	28	68	33	15	129	18	11	55	15	565
Total	106	697	59	79	248	108	52	601	78	44	203	54	2329
05:00 PM	24	169	13	28	84	20	16	133	9	10	74	16	596
05:15 PM	25	180	19	27	81	25	14	142	21	11	62	16	623
05:30 PM	25	171	24	22	76	24	16	124	9	10	77	23	601
05:45 PM	24	206	18	21	75	25	18	142	12	4	73	24	642
Total	98	726	74	98	316	94	64	541	51	35	286	79	2462
Grand Total	314	2488	210	295	825	287	187	1937	202	114	593	176	7628
Apprch %	10.4	82.6	7	21	58.6	20.4	8	83.3	8.7	12.9	67.2	19.9	
Total %	4.1	32.6	2.8	3.9	10.8	3.8	2.5	25.4	2.6	1.5	7.8	2.3	

CITY TRAFFIC COUNTERS

www.ctcounters.com

File Name : Brand_Wilson
Site Code : 00000000
Start Date : 12/1/2016
Page No : 2

	Brand Blvd Southbound				Wilson Ave Westbound				Brand Blvd Northbound				Wilson Ave Eastbound				
Start Time	Left	Thru	Right	App. Total	Left	Thru	Right	App. Total	Left	Thru	Right	App. Total	Left	Thru	Right	App. Total	Int. Total
Peak Hour Analysis From 07:00 AM to 11:45 AM - Peak 1 of 1																	
Peak Hour for Entire Intersection Begins at 08:00 AM																	
08:00 AM	14	136	8	158	10	38	12	60	6	**124**	**13**	**143**	3	**20**	8	31	392
08:15 AM	13	142	**13**	168	17	33	7	57	**14**	112	8	134	**5**	12	4	21	380
08:30 AM	17	**146**	10	**173**	**22**	35	14	71	11	102	9	122	5	19	**11**	**35**	401
08:45 AM	**22**	131	13	166	14	**54**	**16**	**84**	12	118	7	137	5	11	8	24	**411**
Total Volume	66	555	44	665	63	160	49	272	43	456	37	536	18	62	31	111	1584
% App. Total	9.9	83.5	6.6		23.2	58.8	18		8	85.1	6.9		16.2	55.9	27.9		
PHF	.750	.950	.846	.961	.716	.741	.766	.810	.768	.919	.712	.937	.900	.775	.705	.793	.964

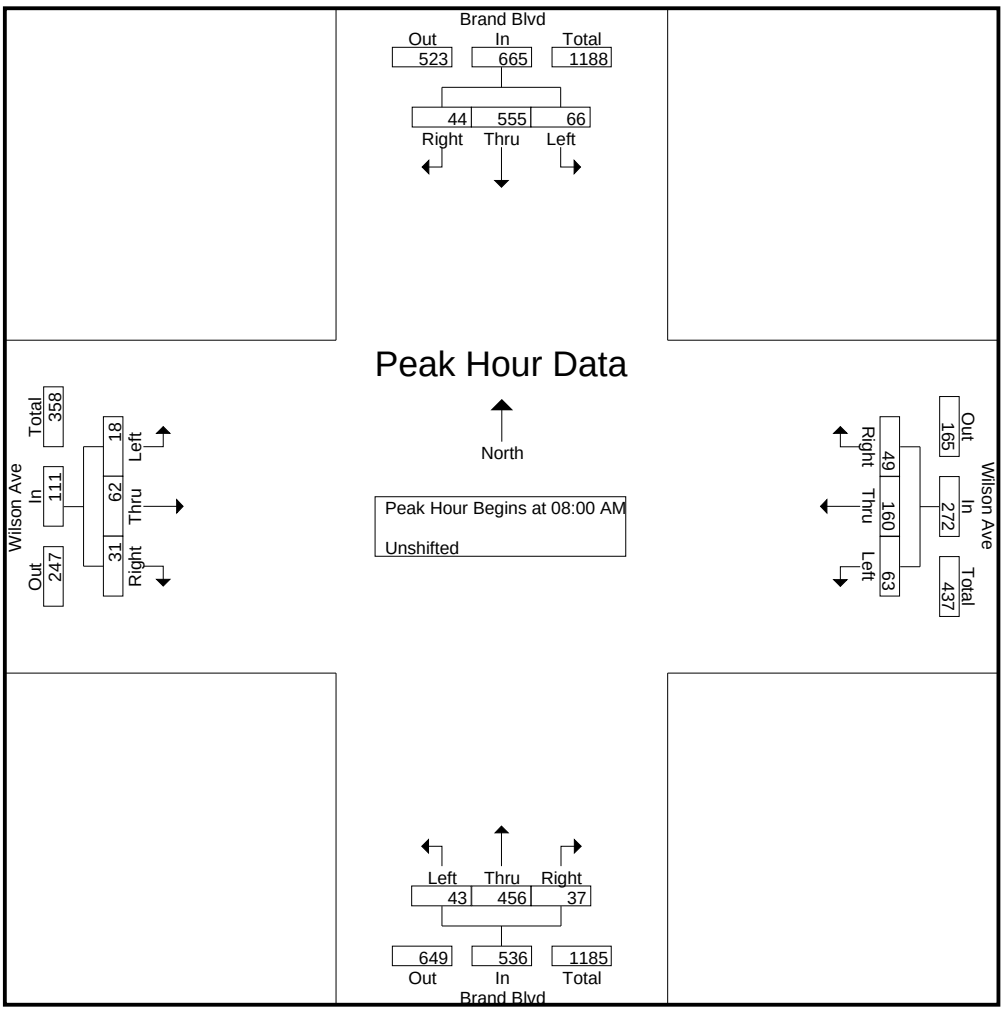

CITY TRAFFIC COUNTERS

www.ctcounters.com

File Name : Brand_Wilson
Site Code : 00000000
Start Date : 12/1/2016
Page No : 3

	Brand Blvd Southbound				Wilson Ave Westbound				Brand Blvd Northbound				Wilson Ave Eastbound				
Start Time	Left	Thru	Right	App. Total	Left	Thru	Right	App. Total	Left	Thru	Right	App. Total	Left	Thru	Right	App. Total	Int. Total
Peak Hour Analysis From 12:00 PM to 05:45 PM - Peak 1 of 1																	
Peak Hour for Entire Intersection Begins at 05:00 PM																	
05:00 PM	24	169	13	206	**28**	**84**	20	132	16	133	9	158	10	74	16	100	596
05:15 PM	**25**	180	19	224	27	81	**25**	**133**	14	**142**	**21**	**177**	**11**	62	16	89	623
05:30 PM	25	171	**24**	220	22	76	24	122	16	124	9	149	10	**77**	23	**110**	601
05:45 PM	24	**206**	18	**248**	21	75	25	121	**18**	142	12	172	4	73	**24**	101	**642**
Total Volume	98	726	74	898	98	316	94	508	64	541	51	656	35	286	79	400	2462
% App. Total	10.9	80.8	8.2		19.3	62.2	18.5		9.8	82.5	7.8		8.8	71.5	19.8		
PHF	.980	.881	.771	.905	.875	.940	.940	.955	.889	.952	.607	.927	.795	.929	.823	.909	.959

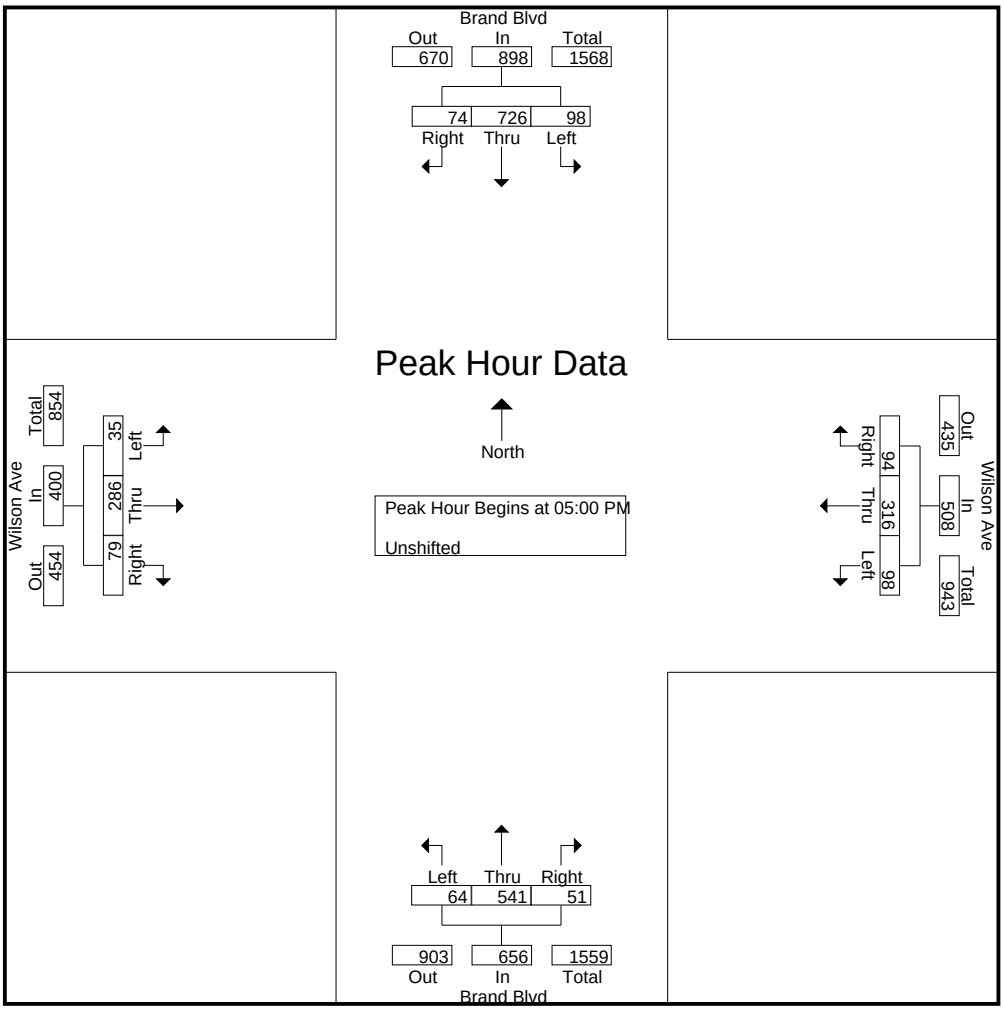

CITY TRAFFIC COUNTERS

www.ctcounters.com

File Name : Maryland_Wilson
Site Code : 00000000
Start Date : 12/1/2016
Page No : 1

Groups Printed- Unshifted

	Maryland Ave Southbound			Wilson Ave Westbound			Maryland Ave Northbound			Wilson Ave Eastbound			
Start Time	Left	Thru	Right	Left	Thru	Right	Left	Thru	Right	Left	Thru	Right	Int. Total
07:00 AM	3	0	2	6	29	8	0	0	0	3	10	3	64
07:15 AM	13	2	0	2	42	6	0	0	2	2	27	3	99
07:30 AM	13	4	5	3	59	6	2	0	2	5	29	7	135
07:45 AM	10	5	5	7	58	11	2	0	5	5	24	9	141
Total	39	11	12	18	188	31	4	0	9	15	90	22	439
08:00 AM	5	10	5	11	58	17	0	1	5	6	26	9	153
08:15 AM	6	4	7	9	61	19	2	0	1	3	19	14	145
08:30 AM	15	9	12	7	66	14	1	0	1	5	24	10	164
08:45 AM	10	5	11	15	74	11	7	0	6	2	24	19	184
Total	36	28	35	42	259	61	10	1	13	16	93	52	646
04:00 PM	19	11	16	4	77	7	12	9	7	8	63	14	247
04:15 PM	20	13	16	5	76	11	17	7	13	10	86	10	284
04:30 PM	26	6	11	7	79	8	16	11	10	10	87	5	276
04:45 PM	23	16	26	7	93	12	21	6	15	3	85	15	322
Total	88	46	69	23	325	38	66	33	45	31	321	44	1129
05:00 PM	37	18	19	3	95	18	23	11	24	5	90	10	353
05:15 PM	39	14	18	1	100	10	16	4	23	7	87	11	330
05:30 PM	37	15	12	5	87	9	18	6	22	5	100	5	321
05:45 PM	28	9	14	3	87	14	19	8	14	8	91	9	304
Total	141	56	63	12	369	51	76	29	83	25	368	35	1308
Grand Total	304	141	179	95	1141	181	156	63	150	87	872	153	3522
Apprch %	48.7	22.6	28.7	6.7	80.5	12.8	42.3	17.1	40.7	7.8	78.4	13.8	
Total %	8.6	4	5.1	2.7	32.4	5.1	4.4	1.8	4.3	2.5	24.8	4.3	

CITY TRAFFIC COUNTERS

www.ctcounters.com

File Name : Maryland_Wilson
Site Code : 00000000
Start Date : 12/1/2016
Page No : 2

	Maryland Ave Southbound				Wilson Ave Westbound				Maryland Ave Northbound				Wilson Ave Eastbound				
Start Time	Left	Thru	Right	App. Total	Left	Thru	Right	App. Total	Left	Thru	Right	App. Total	Left	Thru	Right	App. Total	Int. Total
Peak Hour Analysis From 07:00 AM to 11:45 AM - Peak 1 of 1																	
Peak Hour for Entire Intersection Begins at 08:00 AM																	
08:00 AM	5	**10**	5	20	11	58	17	86	0	**1**	5	6	**6**	**26**	9	41	153
08:15 AM	6	4	7	17	9	61	**19**	89	2	0	1	3	3	19	14	36	145
08:30 AM	**15**	9	**12**	**36**	7	66	14	87	1	0	1	2	5	24	10	39	164
08:45 AM	10	5	11	26	**15**	**74**	11	**100**	**7**	0	**6**	**13**	2	24	**19**	**45**	**184**
Total Volume	36	28	35	99	42	259	61	362	10	1	13	24	16	93	52	161	646
% App. Total	36.4	28.3	35.4		11.6	71.5	16.9		41.7	4.2	54.2		9.9	57.8	32.3		
PHF	.600	.700	.729	.688	.700	.875	.803	.905	.357	.250	.542	.462	.667	.894	.684	.894	.878

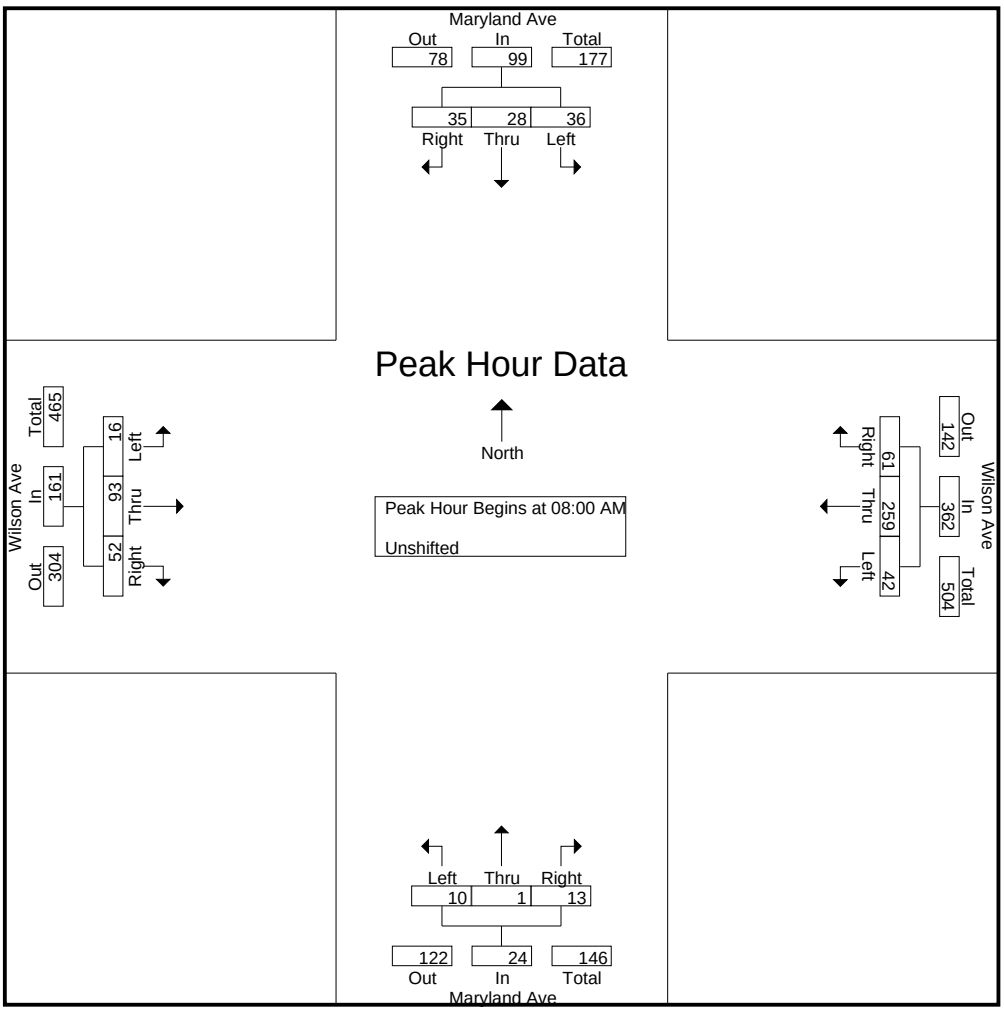

CITY TRAFFIC COUNTERS

www.ctcounters.com

File Name : Maryland_Wilson
Site Code : 00000000
Start Date : 12/1/2016
Page No : 3

	Maryland Ave Southbound				Wilson Ave Westbound				Maryland Ave Northbound				Wilson Ave Eastbound				
Start Time	Left	Thru	Right	App. Total	Left	Thru	Right	App. Total	Left	Thru	Right	App. Total	Left	Thru	Right	App. Total	Int. Total
Peak Hour Analysis From 12:00 PM to 05:45 PM - Peak 1 of 1																	
Peak Hour for Entire Intersection Begins at 04:45 PM																	
04:45 PM	23	16	**26**	65	**7**	93	12	112	21	6	15	42	3	85	**15**	103	322
05:00 PM	37	**18**	19	**74**	3	95	**18**	**116**	**23**	**11**	**24**	**58**	5	90	10	105	**353**
05:15 PM	**39**	14	18	71	1	**100**	10	111	16	4	23	43	**7**	87	11	105	330
05:30 PM	37	15	12	64	5	87	9	101	18	6	22	46	5	**100**	5	**110**	321
Total Volume	136	63	75	274	16	375	49	440	78	27	84	189	20	362	41	423	1326
% App. Total	49.6	23	27.4		3.6	85.2	11.1		41.3	14.3	44.4		4.7	85.6	9.7		
PHF	.872	.875	.721	.926	.571	.938	.681	.948	.848	.614	.875	.815	.714	.905	.683	.961	.939

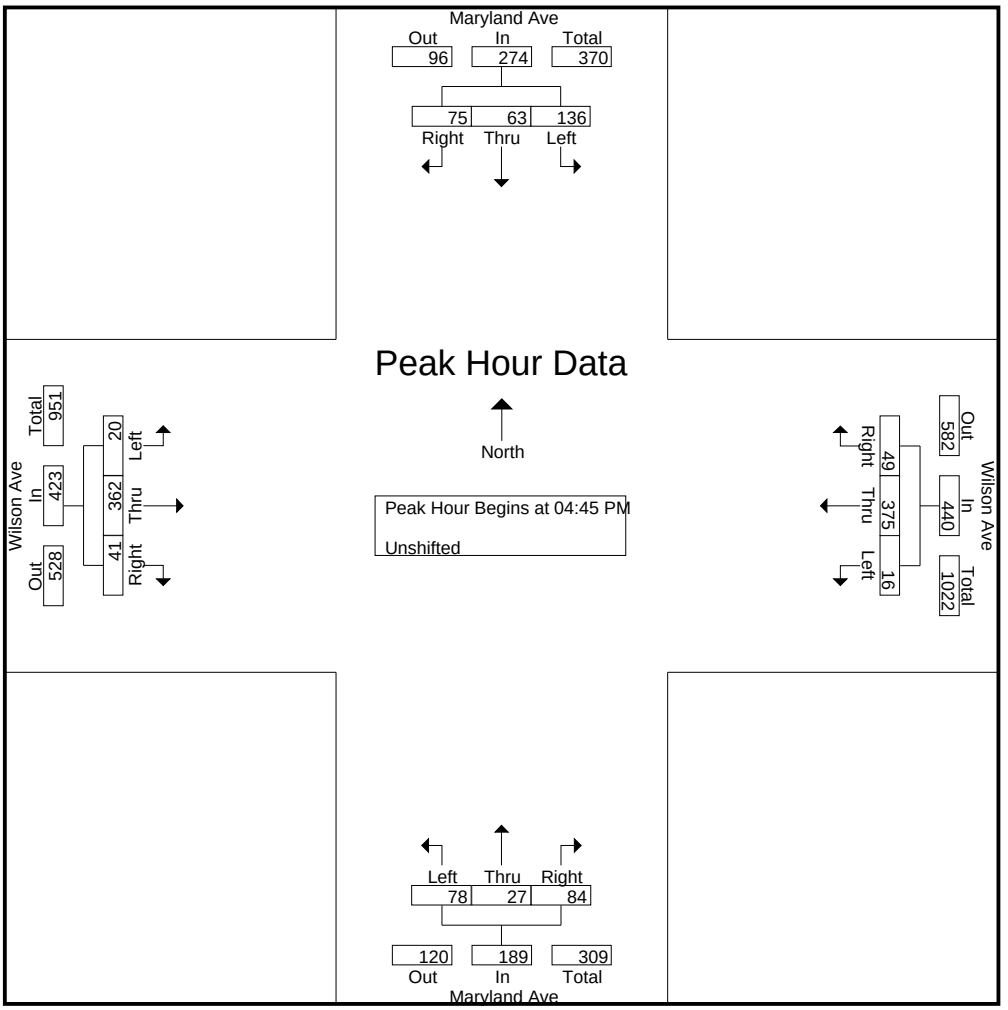

CITY TRAFFIC COUNTERS

www.ctcounters.com

File Name : Louise_Wilson
Site Code : 00000000
Start Date : 4/12/2017
Page No : 1

Groups Printed- Unshifted

	Louise St Southbound			Wilson Ave Westbound			Louise St Northbound			Wilson Ave Eastbound			
Start Time	Left	Thru	Right	Left	Thru	Right	Left	Thru	Right	Left	Thru	Right	Int. Total
07:00 AM	4	26	2	8	28	3	2	17	4	1	27	10	132
07:15 AM	9	18	4	10	26	3	2	18	3	1	23	1	118
07:30 AM	11	21	9	7	47	9	4	20	8	1	31	8	176
07:45 AM	11	46	1	7	59	7	6	32	11	1	40	8	229
Total	35	111	16	32	160	22	14	87	26	4	121	27	655
08:00 AM	13	47	6	7	75	11	5	24	14	1	44	8	255
08:15 AM	15	33	10	8	80	9	7	23	15	3	32	7	242
08:30 AM	12	42	6	6	65	14	10	23	15	2	31	8	234
08:45 AM	17	50	8	12	85	12	5	20	12	0	51	11	283
Total	57	172	30	33	305	46	27	90	56	6	158	34	1014
04:00 PM	18	44	7	7	70	10	5	38	31	8	105	19	362
04:15 PM	12	48	4	8	78	10	8	44	20	3	110	19	364
04:30 PM	7	46	11	16	66	8	11	54	32	4	109	20	384
04:45 PM	15	62	5	10	71	7	8	55	27	7	94	18	379
Total	52	200	27	41	285	35	32	191	110	22	418	76	1489
05:00 PM	9	67	8	6	92	15	9	91	26	7	120	17	467
05:15 PM	13	71	16	9	100	11	3	93	15	2	148	29	510
05:30 PM	14	58	6	9	81	8	11	82	12	9	126	31	447
05:45 PM	10	44	7	10	74	7	4	76	28	10	107	22	399
Total	46	240	37	34	347	41	27	342	81	28	501	99	1823
06:00 PM	16	49	9	14	74	16	14	66	24	8	117	18	425
06:15 PM	9	46	6	12	81	14	13	42	29	3	92	29	376
Grand Total	215	818	125	166	1252	174	127	818	326	71	1407	283	5782
Apprch %	18.6	70.6	10.8	10.4	78.6	10.9	10	64.4	25.6	4	79.9	16.1	
Total %	3.7	14.1	2.2	2.9	21.7	3	2.2	14.1	5.6	1.2	24.3	4.9	

CITY TRAFFIC COUNTERS

www.ctcounters.com

File Name : Louise_Wilson
Site Code : 00000000
Start Date : 4/12/2017
Page No : 2

	Louise St Southbound				Wilson Ave Westbound				Louise St Northbound				Wilson Ave Eastbound				
Start Time	Left	Thru	Right	App. Total	Left	Thru	Right	App. Total	Left	Thru	Right	App. Total	Left	Thru	Right	App. Total	Int. Total
Peak Hour Analysis From 07:00 AM to 11:45 AM - Peak 1 of 1																	
Peak Hour for Entire Intersection Begins at 08:00 AM																	
08:00 AM	13	47	6	66	7	75	11	93	5	**24**	14	43	1	44	8	53	255
08:15 AM	15	33	**10**	58	8	80	9	97	7	23	**15**	45	**3**	32	7	42	242
08:30 AM	12	42	6	60	6	65	**14**	85	**10**	23	15	**48**	2	31	8	41	234
08:45 AM	**17**	**50**	8	**75**	**12**	**85**	12	**109**	5	20	12	37	0	**51**	**11**	**62**	**283**
Total Volume	57	172	30	259	33	305	46	384	27	90	56	173	6	158	34	198	1014
% App. Total	22	66.4	11.6		8.6	79.4	12		15.6	52	32.4		3	79.8	17.2		
PHF	.838	.860	.750	.863	.688	.897	.821	.881	.675	.938	.933	.901	.500	.775	.773	.798	.896

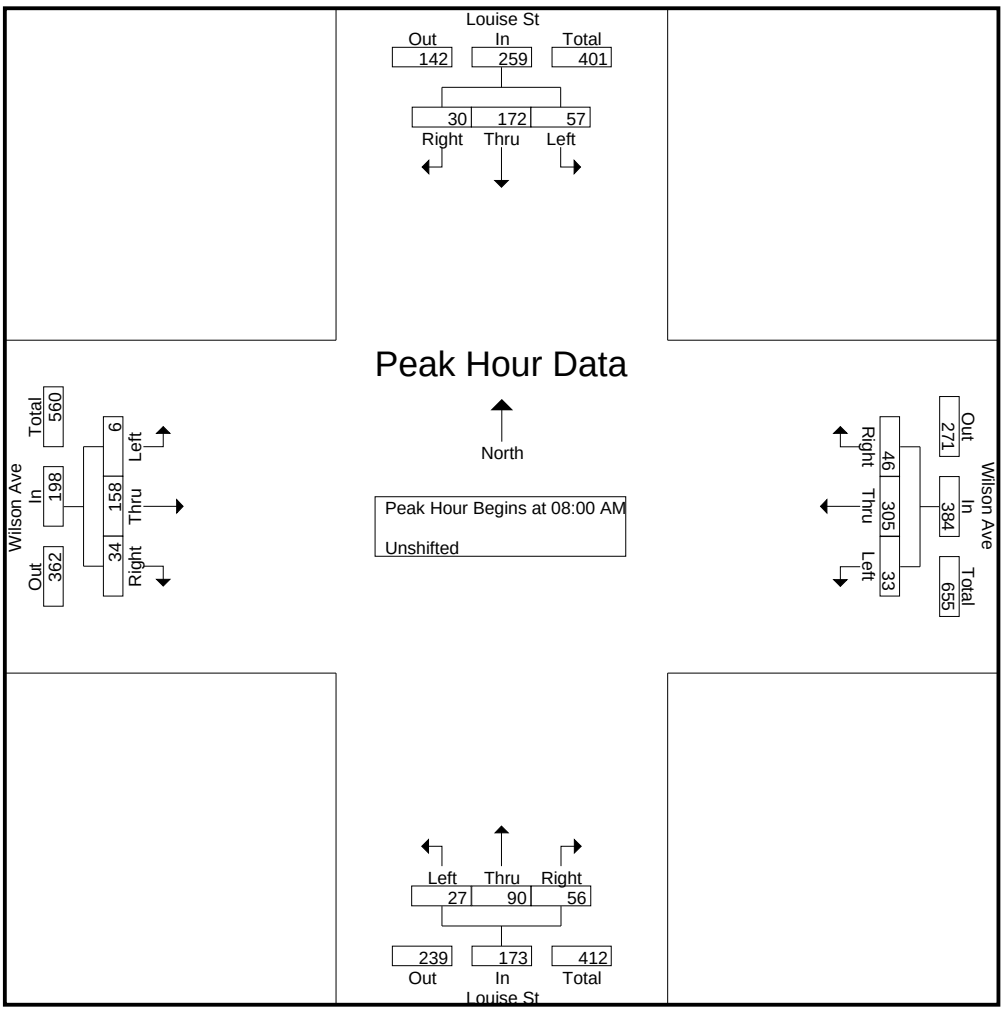

CITY TRAFFIC COUNTERS

www.ctcounters.com

File Name : Louise_Wilson
Site Code : 00000000
Start Date : 4/12/2017
Page No : 3

	Louise St Southbound				Wilson Ave Westbound				Louise St Northbound				Wilson Ave Eastbound				
Start Time	Left	Thru	Right	App. Total	Left	Thru	Right	App. Total	Left	Thru	Right	App. Total	Left	Thru	Right	App. Total	Int. Total
Peak Hour Analysis From 12:00 PM to 06:15 PM - Peak 1 of 1																	
Peak Hour for Entire Intersection Begins at 05:00 PM																	
05:00 PM	9	67	8	84	6	92	**15**	113	9	91	26	**126**	7	120	17	144	467
05:15 PM	13	**71**	**16**	**100**	9	**100**	11	**120**	3	**93**	15	111	2	**148**	29	**179**	**510**
05:30 PM	**14**	58	6	78	9	81	8	98	**11**	82	12	105	9	126	**31**	166	447
05:45 PM	10	44	7	61	**10**	74	7	91	4	76	**28**	108	**10**	107	22	139	399
Total Volume	46	240	37	323	34	347	41	422	27	342	81	450	28	501	99	628	1823
% App. Total	14.2	74.3	11.5		8.1	82.2	9.7		6	76	18		4.5	79.8	15.8		
PHF	.821	.845	.578	.808	.850	.868	.683	.879	.614	.919	.723	.893	.700	.846	.798	.877	.894

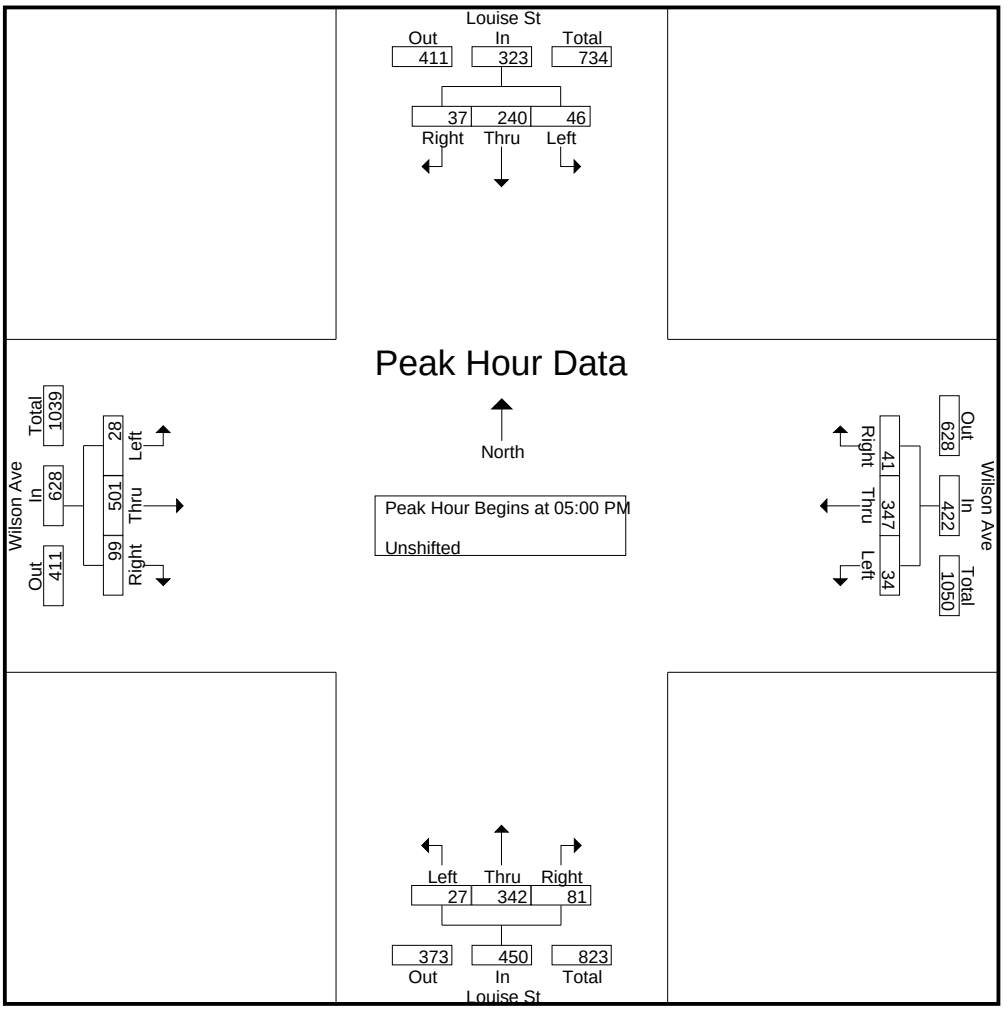

CITY TRAFFIC COUNTERS

www.ctcounters.com

File Name : Kenwood_Wilson
Site Code : 00000000
Start Date : 4/12/2017
Page No : 1

Groups Printed- Unshifted

	Kenwood St Southbound			Wilson Ave Westbound			Kenwood St Northbound			Wilson Ave Eastbound			
Start Time	Left	Thru	Right	Left	Thru	Right	Left	Thru	Right	Left	Thru	Right	Int. Total
07:00 AM	2	7	4	1	25	3	1	1	1	1	25	5	76
07:15 AM	2	6	4	1	46	5	2	3	4	3	34	2	112
07:30 AM	4	8	3	6	62	4	0	9	2	1	50	11	160
07:45 AM	8	11	6	3	67	5	2	12	6	2	60	9	191
Total	16	32	17	11	200	17	5	25	13	7	169	27	539
08:00 AM	6	13	8	6	79	7	3	4	5	5	50	10	196
08:15 AM	3	14	1	2	79	6	3	13	3	6	42	14	186
08:30 AM	5	11	3	9	77	5	3	15	3	1	52	13	197
08:45 AM	7	17	5	9	82	11	5	28	5	1	65	15	250
Total	21	55	17	26	317	29	14	60	16	13	209	52	829
04:00 PM	2	11	5	8	76	7	5	12	7	7	122	19	281
04:15 PM	7	14	2	10	86	5	3	15	12	5	128	14	301
04:30 PM	4	18	4	8	83	6	6	16	4	7	120	20	296
04:45 PM	2	10	3	6	80	4	3	15	9	4	117	24	277
Total	15	53	14	32	325	22	17	58	32	23	487	77	1155
05:00 PM	7	17	8	4	83	6	10	22	6	6	126	15	310
05:15 PM	6	12	2	8	88	7	8	25	5	19	129	16	325
05:30 PM	4	18	6	5	73	9	3	22	8	14	126	15	303
05:45 PM	4	10	2	6	85	4	3	27	11	6	115	16	289
Total	21	57	18	23	329	26	24	96	30	45	496	62	1227
06:00 PM	7	17	3	5	92	7	3	13	10	5	140	11	313
06:15 PM	3	13	5	10	80	3	2	18	5	4	118	5	266
Grand Total	83	227	74	107	1343	104	65	270	106	97	1619	234	4329
Apprch %	21.6	59.1	19.3	6.9	86.4	6.7	14.7	61.2	24	5	83	12	
Total %	1.9	5.2	1.7	2.5	31	2.4	1.5	6.2	2.4	2.2	37.4	5.4	

CITY TRAFFIC COUNTERS

www.ctcounters.com

File Name : Kenwood_Wilson
Site Code : 00000000
Start Date : 4/12/2017
Page No : 2

	Kenwood St Southbound				Wilson Ave Westbound				Kenwood St Northbound				Wilson Ave Eastbound				
Start Time	Left	Thru	Right	App. Total	Left	Thru	Right	App. Total	Left	Thru	Right	App. Total	Left	Thru	Right	App. Total	Int. Total
Peak Hour Analysis From 07:00 AM to 11:45 AM - Peak 1 of 1																	
Peak Hour for Entire Intersection Begins at 08:00 AM																	
08:00 AM	6	13	**8**	27	6	79	7	92	3	4	**5**	12	5	50	10	65	196
08:15 AM	3	14	1	18	2	79	6	87	3	13	3	19	**6**	42	14	62	186
08:30 AM	5	11	3	19	**9**	77	5	91	3	15	3	21	1	52	13	66	197
08:45 AM	**7**	**17**	5	**29**	9	**82**	**11**	**102**	**5**	**28**	5	**38**	1	**65**	**15**	**81**	**250**
Total Volume	21	55	17	93	26	317	29	372	14	60	16	90	13	209	52	274	829
% App. Total	22.6	59.1	18.3		7	85.2	7.8		15.6	66.7	17.8		4.7	76.3	19		
PHF	.750	.809	.531	.802	.722	.966	.659	.912	.700	.536	.800	.592	.542	.804	.867	.846	.829

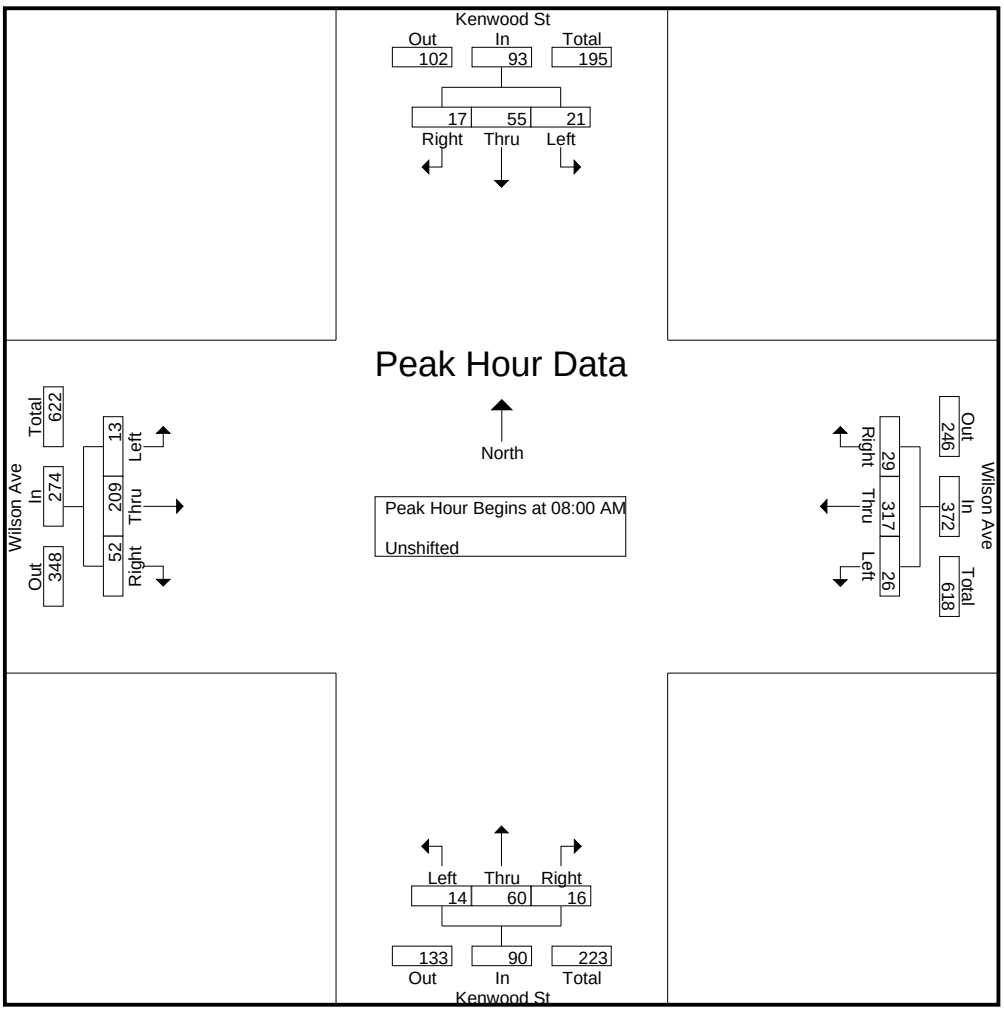

CITY TRAFFIC COUNTERS

www.ctcounters.com

File Name : Kenwood_Wilson
Site Code : 00000000
Start Date : 4/12/2017
Page No : 3

	Kenwood St Southbound				Wilson Ave Westbound				Kenwood St Northbound				Wilson Ave Eastbound				
Start Time	Left	Thru	Right	App. Total	Left	Thru	Right	App. Total	Left	Thru	Right	App. Total	Left	Thru	Right	App. Total	Int. Total
Peak Hour Analysis From 12:00 PM to 06:15 PM - Peak 1 of 1																	
Peak Hour for Entire Intersection Begins at 05:15 PM																	
05:15 PM	6	12	2	20	**8**	88	7	103	**8**	25	5	38	**19**	129	**16**	**164**	**325**
05:30 PM	4	**18**	**6**	**28**	5	73	**9**	87	3	22	8	33	14	126	15	155	303
05:45 PM	4	10	2	16	6	85	4	95	3	**27**	**11**	**41**	6	115	16	137	289
06:00 PM	**7**	17	3	27	5	**92**	7	**104**	3	13	10	26	5	**140**	11	156	313
Total Volume	21	57	13	91	24	338	27	389	17	87	34	138	44	510	58	612	1230
% App. Total	23.1	62.6	14.3		6.2	86.9	6.9		12.3	63	24.6		7.2	83.3	9.5		
PHF	.750	.792	.542	.813	.750	.918	.750	.935	.531	.806	.773	.841	.579	.911	.906	.933	.946

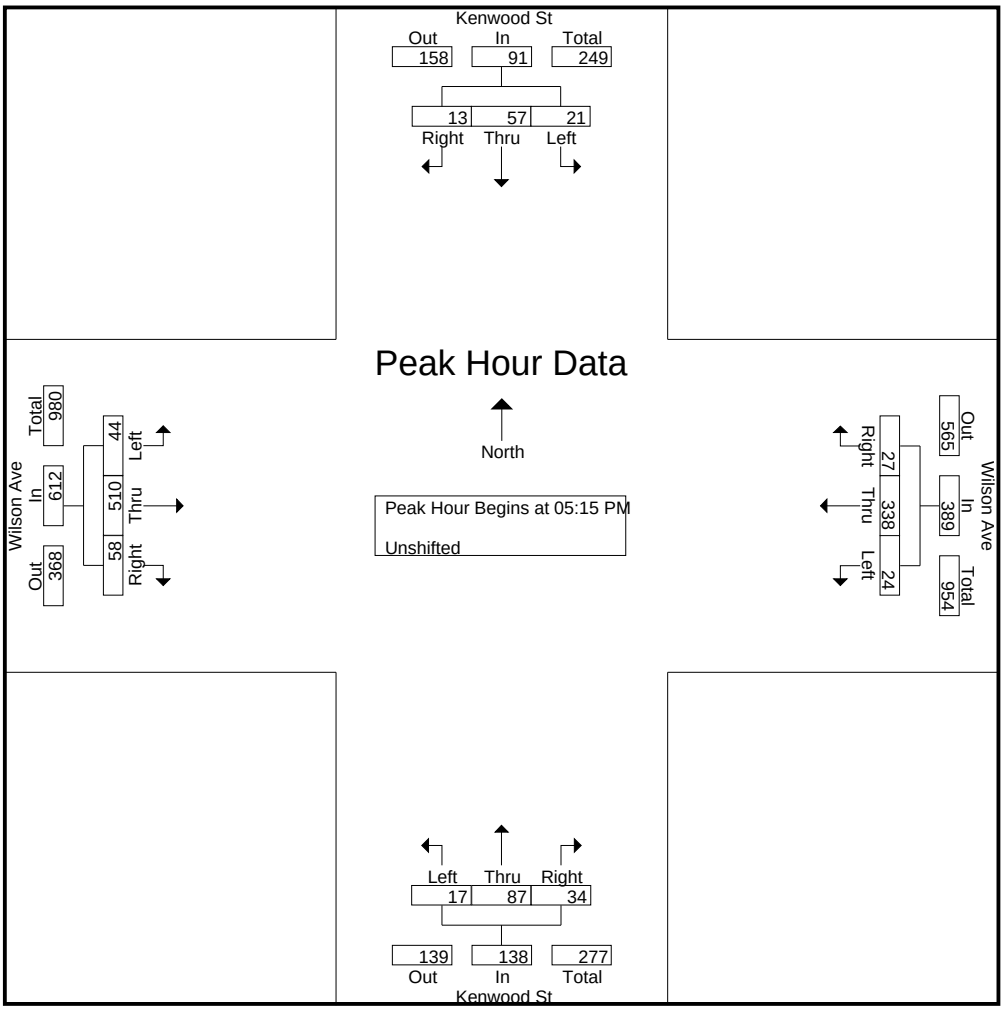

CITY TRAFFIC COUNTERS

www.ctcounters.com

File Name : Jackson_Wilson
Site Code : 00000000
Start Date : 9/21/2017
Page No : 1

Groups Printed- Unshifted

	Jackson St Southbound			Wilson Ave Westbound			Jackson St Northbound			Wilson Ave Eastbound			
Start Time	Left	Thru	Right	Left	Thru	Right	Left	Thru	Right	Left	Thru	Right	Int. Total
07:00 AM	15	30	4	9	30	4	3	7	8	1	23	2	136
07:15 AM	11	40	3	9	50	6	4	18	11	1	35	6	194
07:30 AM	21	43	7	7	63	19	13	34	4	4	46	8	269
07:45 AM	18	46	1	15	95	29	2	37	2	2	47	6	300
Total	65	159	15	40	238	58	22	96	25	8	151	22	899
08:00 AM	13	53	4	11	85	19	3	28	3	1	41	5	266
08:15 AM	7	42	4	11	86	14	6	23	4	0	46	9	252
08:30 AM	13	52	3	5	113	10	2	30	9	4	43	8	292
08:45 AM	14	41	5	9	100	24	4	31	6	3	45	5	287
Total	47	188	16	36	384	67	15	112	22	8	175	27	1097
03:00 PM	12	36	1	7	70	23	2	31	19	7	85	3	296
03:15 PM	17	40	7	10	95	24	3	46	17	3	107	5	374
03:30 PM	17	31	5	6	98	15	5	44	15	7	90	5	338
03:45 PM	16	44	7	8	89	7	5	35	19	5	97	8	340
Total	62	151	20	31	352	69	15	156	70	22	379	21	1348
04:00 PM	16	42	4	9	92	12	5	40	15	4	113	12	364
04:15 PM	18	50	4	9	89	10	5	41	11	4	121	4	366
04:30 PM	18	35	6	5	92	18	4	55	11	2	108	10	364
04:45 PM	17	37	8	10	95	8	6	52	9	3	123	12	380
Total	69	164	22	33	368	48	20	188	46	13	465	38	1474
05:00 PM	28	39	4	3	88	17	11	58	24	8	119	8	407
05:15 PM	16	59	7	7	119	15	9	63	19	9	145	9	477
05:30 PM	21	51	8	9	106	23	9	61	11	6	127	9	441
05:45 PM	23	51	6	9	90	22	5	51	14	9	121	7	408
Total	88	200	25	28	403	77	34	233	68	32	512	33	1733
06:00 PM	13	46	7	12	107	26	3	54	15	7	120	7	417
06:15 PM	12	46	5	9	91	13	4	54	11	7	110	6	368
06:30 PM	5	35	3	4	87	17	5	38	12	6	99	4	315
06:45 PM	12	33	6	9	96	18	2	32	9	1	103	5	326
Total	42	160	21	34	381	74	14	178	47	21	432	22	1426
Grand Total	373	1022	119	202	2126	393	120	963	278	104	2114	163	7977
Apprch %	24.6	67.5	7.9	7.4	78.1	14.4	8.8	70.8	20.4	4.4	88.8	6.8	
Total %	4.7	12.8	1.5	2.5	26.7	4.9	1.5	12.1	3.5	1.3	26.5	2	

CITY TRAFFIC COUNTERS

www.ctcounters.com

File Name : Jackson_Wilson
Site Code : 00000000
Start Date : 9/21/2017
Page No : 2

	Jackson St Southbound				Wilson Ave Westbound				Jackson St Northbound				Wilson Ave Eastbound				
Start Time	Left	Thru	Right	App. Total	Left	Thru	Right	App. Total	Left	Thru	Right	App. Total	Left	Thru	Right	App. Total	Int. Total
Peak Hour Analysis From 07:00 AM to 11:45 AM - Peak 1 of 1																	
Peak Hour for Entire Intersection Begins at 07:45 AM																	
07:45 AM	**18**	46	1	65	**15**	95	**29**	**139**	2	**37**	2	**41**	2	**47**	6	**55**	**300**
08:00 AM	13	**53**	**4**	**70**	11	85	19	115	3	28	3	34	1	41	5	47	266
08:15 AM	7	42	4	53	11	86	14	111	**6**	23	4	33	0	46	**9**	55	252
08:30 AM	13	52	3	68	5	**113**	10	128	2	30	**9**	41	**4**	43	8	55	292
Total Volume	51	193	12	256	42	379	72	493	13	118	18	149	7	177	28	212	1110
% App. Total	19.9	75.4	4.7		8.5	76.9	14.6		8.7	79.2	12.1		3.3	83.5	13.2		
PHF	.708	.910	.750	.914	.700	.838	.621	.887	.542	.797	.500	.909	.438	.941	.778	.964	.925

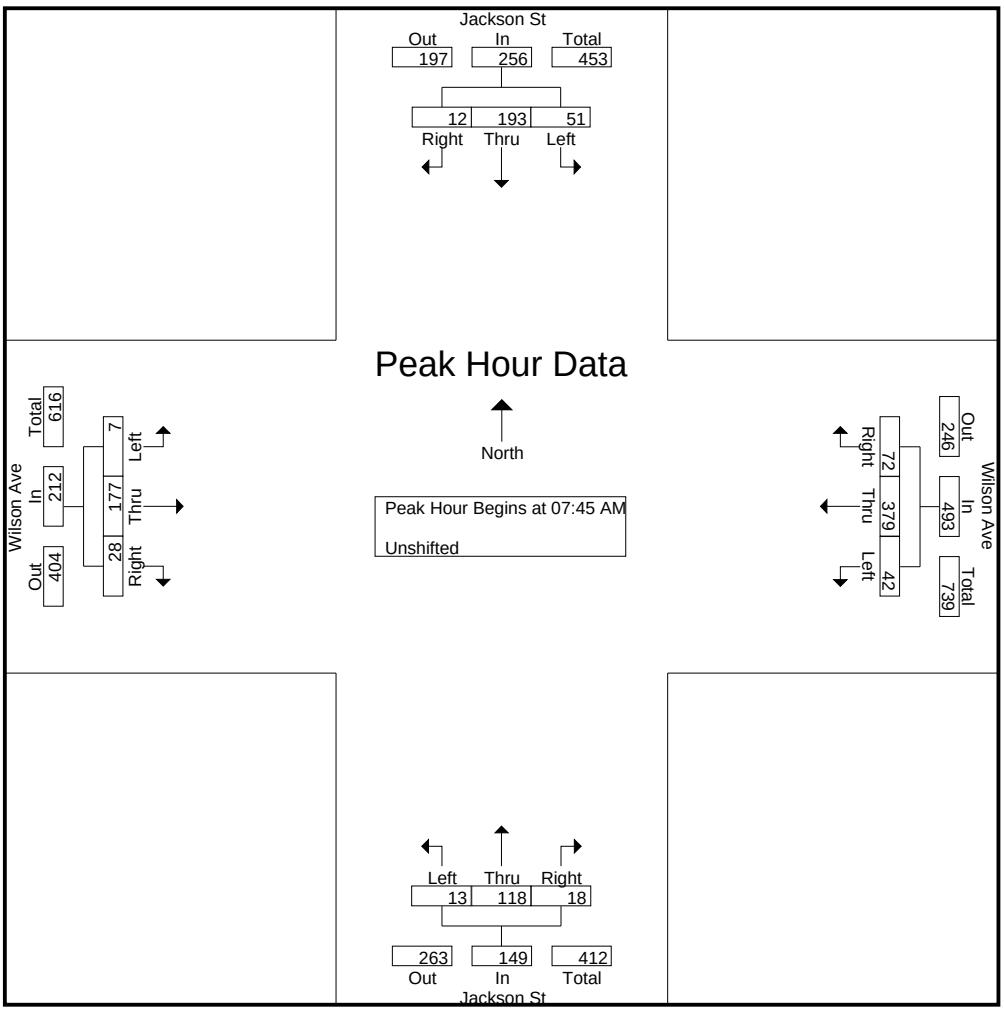

CITY TRAFFIC COUNTERS

www.ctcounters.com

File Name : Jackson_Wilson
Site Code : 00000000
Start Date : 9/21/2017
Page No : 3

	Jackson St Southbound				Wilson Ave Westbound				Jackson St Northbound				Wilson Ave Eastbound				
Start Time	Left	Thru	Right	App. Total	Left	Thru	Right	App. Total	Left	Thru	Right	App. Total	Left	Thru	Right	App. Total	Int. Total
Peak Hour Analysis From 12:00 PM to 06:45 PM - Peak 1 of 1																	
Peak Hour for Entire Intersection Begins at 05:15 PM																	
05:15 PM	16	**59**	7	**82**	7	**119**	15	141	**9**	**63**	**19**	**91**	**9**	**145**	**9**	**163**	**477**
05:30 PM	21	51	**8**	80	9	106	23	138	9	61	11	81	6	127	9	142	441
05:45 PM	**23**	51	6	80	9	90	22	121	5	51	14	70	9	121	7	137	408
06:00 PM	13	46	7	66	**12**	107	**26**	**145**	3	54	15	72	7	120	7	134	417
Total Volume	73	207	28	308	37	422	86	545	26	229	59	314	31	513	32	576	1743
% App. Total	23.7	67.2	9.1		6.8	77.4	15.8		8.3	72.9	18.8		5.4	89.1	5.6		
PHF	.793	.877	.875	.939	.771	.887	.827	.940	.722	.909	.776	.863	.861	.884	.889	.883	.914

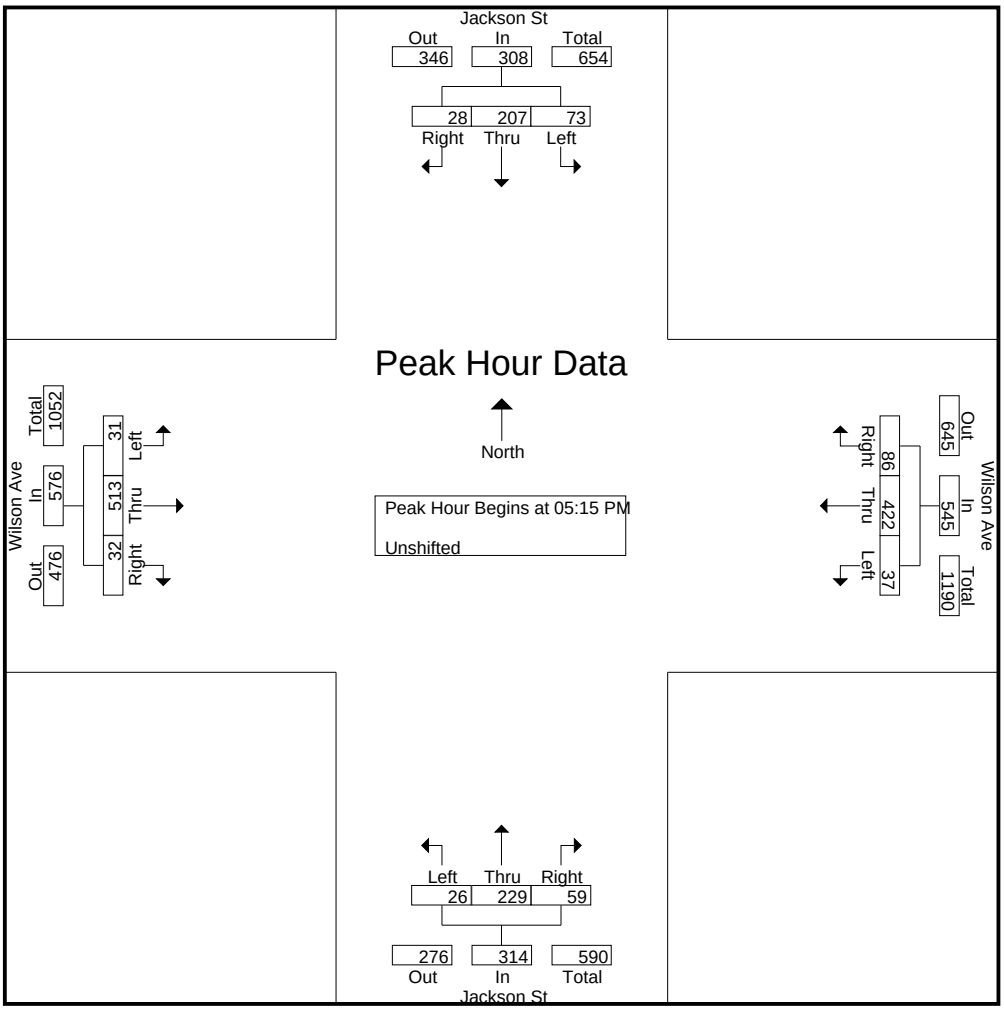

CITY TRAFFIC COUNTERS

www.ctcounters.com

File Name : Glendale_Wilson
Site Code : 00000000
Start Date : 9/21/2017
Page No : 1

Groups Printed- Unshifted

	Glendale Ave Southbound			Wilson Ave Westbound			Glendale Ave Northbound			Wilson Ave Eastbound			
Start Time	Left	Thru	Right	Left	Thru	Right	Left	Thru	Right	Left	Thru	Right	Int. Total
07:00 AM	5	145	57	8	38	7	8	81	3	10	10	15	387
07:15 AM	9	171	51	26	68	11	5	122	8	22	18	12	523
07:30 AM	11	194	33	16	72	19	8	131	5	14	38	14	555
07:45 AM	20	176	40	34	112	20	21	135	7	8	38	16	627
Total	45	686	181	84	290	57	42	469	23	54	104	57	2092
08:00 AM	15	187	48	27	101	16	18	126	3	15	21	10	587
08:15 AM	6	194	31	23	106	14	20	110	3	19	23	7	556
08:30 AM	18	186	31	22	98	13	14	123	4	13	23	11	556
08:45 AM	14	163	35	25	103	13	21	135	13	15	28	13	578
Total	53	730	145	97	408	56	73	494	23	62	95	41	2277
03:00 PM	36	222	45	17	61	19	22	213	13	42	57	13	760
03:15 PM	42	191	30	14	66	21	36	172	10	37	67	22	708
03:30 PM	34	175	27	14	67	24	14	234	22	48	62	22	743
03:45 PM	25	183	33	13	76	16	22	217	12	44	66	29	736
Total	137	771	135	58	270	80	94	836	57	171	252	86	2947
04:00 PM	44	170	30	13	64	24	29	223	7	43	64	31	742
04:15 PM	45	202	36	10	56	22	25	211	11	31	67	38	754
04:30 PM	29	181	19	15	67	19	23	193	9	45	85	23	708
04:45 PM	36	192	22	13	79	23	25	191	14	31	71	21	718
Total	154	745	107	51	266	88	102	818	41	150	287	113	2922
05:00 PM	36	188	23	12	58	18	28	238	23	79	93	13	809
05:15 PM	38	152	19	14	96	21	14	192	10	45	100	18	719
05:30 PM	51	200	20	18	64	18	28	208	27	46	99	21	800
05:45 PM	42	210	25	12	78	29	23	248	18	34	84	22	825
Total	167	750	87	56	296	86	93	886	78	204	376	74	3153
06:00 PM	39	167	23	10	80	35	19	199	12	36	90	24	734
06:15 PM	35	194	23	14	58	28	22	253	19	35	56	16	753
06:30 PM	49	181	24	14	72	38	24	209	20	19	66	12	728
06:45 PM	43	199	30	11	62	20	21	186	16	33	56	19	696
Total	166	741	100	49	272	121	86	847	67	123	268	71	2911
Grand Total	722	4423	755	395	1802	488	490	4350	289	764	1382	442	16302
Apprch %	12.2	75	12.8	14.7	67.1	18.2	9.6	84.8	5.6	29.5	53.4	17.1	
Total %	4.4	27.1	4.6	2.4	11.1	3	3	26.7	1.8	4.7	8.5	2.7	

CITY TRAFFIC COUNTERS

www.ctcounters.com

File Name : Glendale_Wilson
Site Code : 00000000
Start Date : 9/21/2017
Page No : 2

	Glendale Ave Southbound				Wilson Ave Westbound				Glendale Ave Northbound				Wilson Ave Eastbound				
Start Time	Left	Thru	Right	App. Total	Left	Thru	Right	App. Total	Left	Thru	Right	App. Total	Left	Thru	Right	App. Total	Int. Total
Peak Hour Analysis From 07:00 AM to 11:45 AM - Peak 1 of 1																	
Peak Hour for Entire Intersection Begins at 07:45 AM																	
07:45 AM	**20**	176	40	236	**34**	**112**	**20**	**166**	**21**	**135**	**7**	**163**	8	**38**	**16**	**62**	**627**
08:00 AM	15	187	**48**	**250**	27	101	16	144	18	126	3	147	15	21	10	46	587
08:15 AM	6	**194**	31	231	23	106	14	143	20	110	3	133	**19**	23	7	49	556
08:30 AM	18	186	31	235	22	98	13	133	14	123	4	141	13	23	11	47	556
Total Volume	59	743	150	952	106	417	63	586	73	494	17	584	55	105	44	204	2326
% App. Total	6.2	78	15.8		18.1	71.2	10.8		12.5	84.6	2.9		27	51.5	21.6		
PHF	.738	.957	.781	.952	.779	.931	.788	.883	.869	.915	.607	.896	.724	.691	.688	.823	.927

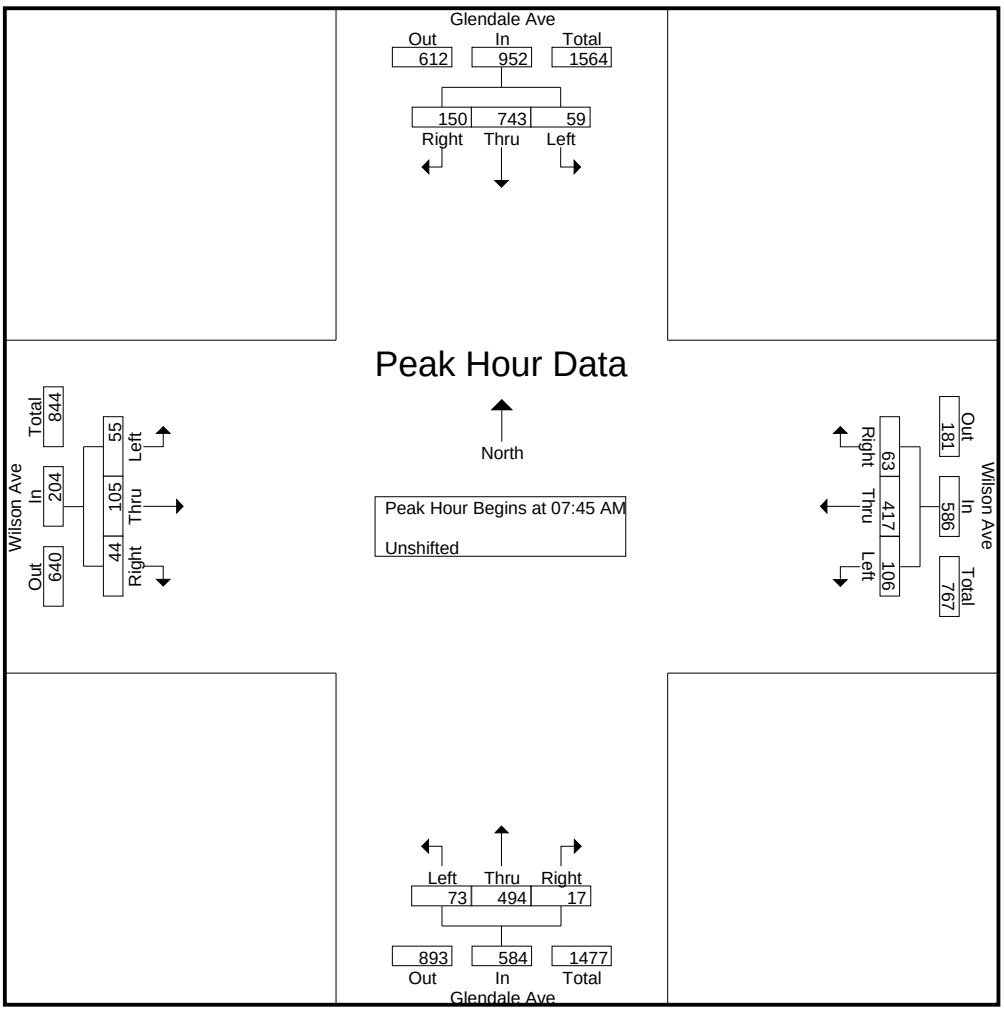

CITY TRAFFIC COUNTERS

www.ctcounters.com

File Name : Glendale_Wilson
Site Code : 00000000
Start Date : 9/21/2017
Page No : 3

	Glendale Ave Southbound				Wilson Ave Westbound				Glendale Ave Northbound				Wilson Ave Eastbound				
Start Time	Left	Thru	Right	App. Total	Left	Thru	Right	App. Total	Left	Thru	Right	App. Total	Left	Thru	Right	App. Total	Int. Total
Peak Hour Analysis From 12:00 PM to 06:45 PM - Peak 1 of 1																	
Peak Hour for Entire Intersection Begins at 05:00 PM																	
05:00 PM	36	188	23	247	12	58	18	88	**28**	238	23	**289**	**79**	93	13	**185**	809
05:15 PM	38	152	19	209	14	**96**	21	**131**	14	192	10	216	45	**100**	18	163	719
05:30 PM	**51**	200	20	271	**18**	64	18	100	28	208	**27**	263	46	99	21	166	800
05:45 PM	42	**210**	**25**	**277**	12	78	**29**	119	23	**248**	18	289	34	84	**22**	140	**825**
Total Volume	167	750	87	1004	56	296	86	438	93	886	78	1057	204	376	74	654	3153
% App. Total	16.6	74.7	8.7		12.8	67.6	19.6		8.8	83.8	7.4		31.2	57.5	11.3		
PHF	.819	.893	.870	.906	.778	.771	.741	.836	.830	.893	.722	.914	.646	.940	.841	.884	.955

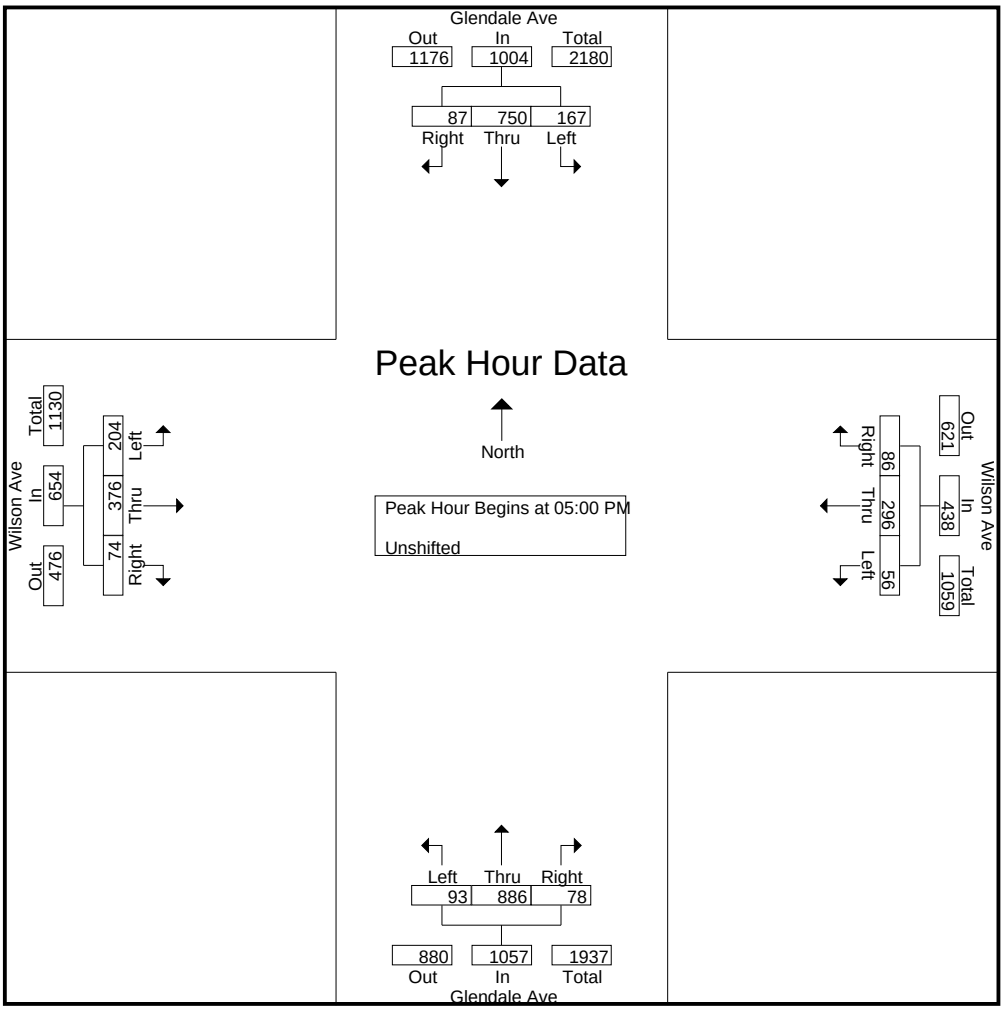

Transportation Studies, Inc.
2640 Walnut Avenue, Suite L
Tustin, CA. 92780

City: GLENDALE
N-S- Direction: BRAND BOULEVARD
E-W Direction: BROADWAY

File Name : H1605018
Site Code : 18-1
Start Date : 5/18/2016
Page No : 1

Groups Printed- Turning Movements

	BRAND BOULEVARD Southbound			BROADWAY Westbound			BRAND BOULEVARD Northbound			BROADWAY Eastbound			
Start Time	Right	Thru	Left	Right	Thru	Left	Right	Thru	Left	Right	Thru	Left	Int. Total
07:30	10	93	16	15	67	15	7	82	7	6	50	7	375
07:45	8	114	26	17	88	17	10	86	18	6	56	6	452
Total	18	207	42	32	155	32	17	168	25	12	106	13	827
08:00	15	103	22	25	80	25	6	95	9	14	76	8	478
08:15	14	100	23	26	102	26	15	79	18	10	55	6	474
08:30	11	90	21	19	90	19	13	98	16	13	51	8	449
08:45	22	103	22	20	101	20	11	96	21	14	81	7	518
Total	62	396	88	90	373	90	45	368	64	51	263	29	1919
09:00	12	99	26	20	72	20	13	73	20	10	49	3	417
09:15	19	102	37	21	92	21	10	96	25	16	61	9	509
Total	31	201	63	41	164	41	23	169	45	26	110	12	926
16:30	22	136	23	29	102	29	20	139	31	9	133	14	687
16:45	39	148	33	29	109	33	24	111	28	23	149	22	748
Total	61	284	56	58	211	62	44	250	59	32	282	36	1435
17:00	27	128	21	32	116	32	28	107	23	19	152	32	717
17:15	36	146	32	38	133	38	34	134	33	12	173	41	850
17:30	36	148	27	38	99	38	32	147	30	20	149	38	802
17:45	35	151	34	39	100	39	33	136	37	25	147	27	803
Total	134	573	114	147	448	147	127	524	123	76	621	138	3172
18:00	33	164	22	24	97	24	26	138	36	16	135	44	759
18:15	22	147	18	34	97	34	28	120	24	27	135	29	715
Grand Total	361	1972	403	426	1545	430	310	1737	376	240	1652	301	9753
Apprch %	13.2	72.1	14.7	17.7	64.3	17.9	12.8	71.7	15.5	10.9	75.3	13.7	
Total %	3.7	20.2	4.1	4.4	15.8	4.4	3.2	17.8	3.9	2.5	16.9	3.1	

Transportation Studies, Inc.
2640 Walnut Avenue, Suite L
Tustin, CA. 92780

File Name : H1605018
Site Code : 18-1
Start Date : 5/18/2016
Page No : 2

	BRAND BOULEVARD Southbound				BROADWAY Westbound				BRAND BOULEVARD Northbound				BROADWAY Eastbound				
Start Time	Right	Thru	Left	App. Total	Right	Thru	Left	App. Total	Right	Thru	Left	App. Total	Right	Thru	Left	App. Total	Int. Total
Peak Hour Analysis From 07:30 to 09:15 - Peak 1 of 1																	
Peak Hour for Entire Intersection Begins at 08:00																	
08:00	15	**103**	22	140	25	80	25	130	6	95	9	110	**14**	76	**8**	98	478
08:15	14	100	**23**	137	**26**	**102**	**26**	**154**	**15**	79	18	112	10	55	6	71	474
08:30	11	90	21	122	19	90	19	128	13	**98**	16	127	13	51	8	72	449
08:45	**22**	103	22	**147**	20	101	20	141	11	96	**21**	**128**	14	**81**	7	**102**	**518**
Total Volume	62	396	88	546	90	373	90	553	45	368	64	477	51	263	29	343	1919
% App. Total	11.4	72.5	16.1		16.3	67.5	16.3		9.4	77.1	13.4		14.9	76.7	8.5		
PHF	.705	.961	.957	.929	.865	.914	.865	.898	.750	.939	.762	.932	.911	.812	.906	.841	.926

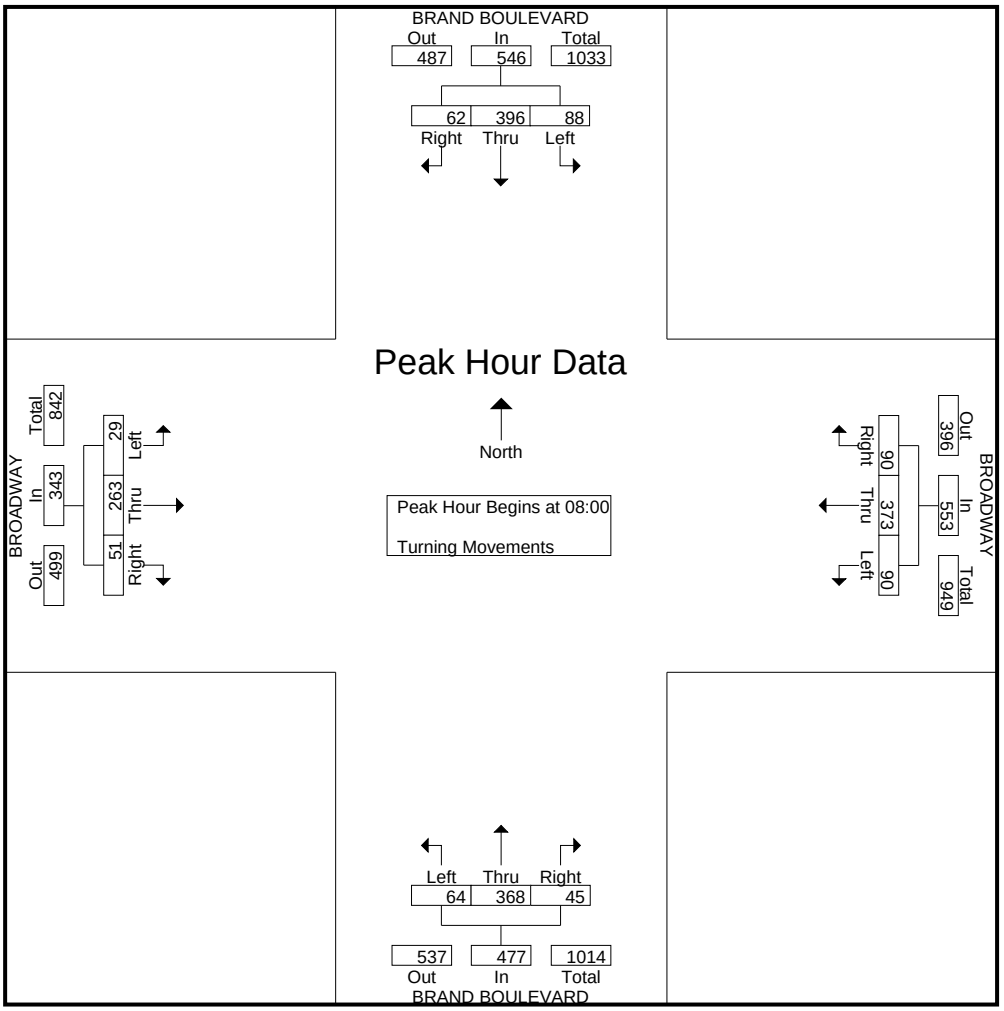

Transportation Studies, Inc.
2640 Walnut Avenue, Suite L
Tustin, CA. 92780

File Name : H1605018
Site Code : 18-1
Start Date : 5/18/2016
Page No : 3

	BRAND BOULEVARD Southbound				BROADWAY Westbound				BRAND BOULEVARD Northbound				BROADWAY Eastbound				
Start Time	Right	Thru	Left	App. Total	Right	Thru	Left	App. Total	Right	Thru	Left	App. Total	Right	Thru	Left	App. Total	Int. Total
Peak Hour Analysis From 16:30 to 18:15 - Peak 1 of 1																	
Peak Hour for Entire Intersection Begins at 17:15																	
17:15	**36**	146	32	214	38	**133**	38	**209**	**34**	134	33	201	12	**173**	41	**226**	**850**
17:30	36	148	27	211	38	99	38	175	32	**147**	30	**209**	20	149	38	207	802
17:45	35	151	**34**	**220**	**39**	100	**39**	178	33	136	**37**	206	**25**	147	27	199	803
18:00	33	**164**	22	219	24	97	24	145	26	138	36	200	16	135	**44**	195	759
Total Volume	140	609	115	864	139	429	139	707	125	555	136	816	73	604	150	827	3214
% App. Total	16.2	70.5	13.3		19.7	60.7	19.7		15.3	68	16.7		8.8	73	18.1		
PHF	.972	.928	.846	.982	.891	.806	.891	.846	.919	.944	.919	.976	.730	.873	.852	.915	.945

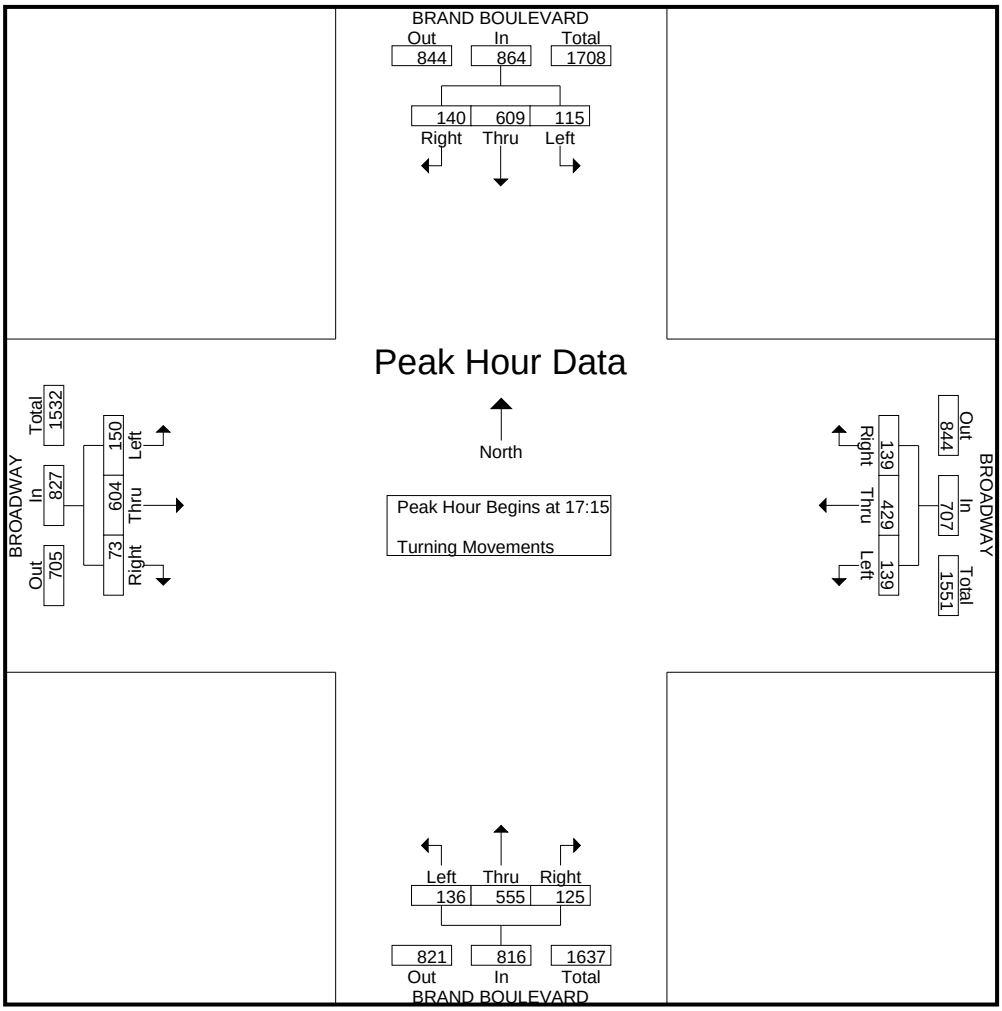

CITY TRAFFIC COUNTERS

www.ctcounters.com

File Name : Maryland_Broadway
Site Code : 00000000
Start Date : 12/1/2016
Page No : 1

Groups Printed- Unshifted

	Maryland Ave Southbound			Broadway Westbound			Maryland Ave Northbound			Broadway Eastbound			
Start Time	Left	Thru	Right	Left	Thru	Right	Left	Thru	Right	Left	Thru	Right	Int. Total
07:00 AM	0	0	1	2	69	3	6	0	5	1	44	7	138
07:15 AM	0	0	1	2	68	1	6	1	2	1	50	6	138
07:30 AM	1	0	0	6	85	3	5	0	5	4	67	4	180
07:45 AM	1	0	2	4	135	3	9	0	4	3	91	5	257
Total	2	0	4	14	357	10	26	1	16	9	252	22	713
08:00 AM	2	0	0	10	137	9	8	1	2	5	76	4	254
08:15 AM	1	0	2	10	138	8	2	1	5	4	64	9	244
08:30 AM	2	1	2	11	143	14	6	4	8	11	64	2	268
08:45 AM	4	1	5	3	141	12	4	3	5	8	97	5	288
Total	9	2	9	34	559	43	20	9	20	28	301	20	1054
04:00 PM	7	0	10	12	130	8	14	2	10	6	131	16	346
04:15 PM	8	2	9	5	125	3	8	4	19	5	122	17	327
04:30 PM	5	3	12	10	121	7	10	1	22	7	128	23	349
04:45 PM	10	2	18	11	122	6	20	9	16	8	178	26	426
Total	30	7	49	38	498	24	52	16	67	26	559	82	1448
05:00 PM	14	7	18	10	139	9	19	4	19	3	179	24	445
05:15 PM	13	3	13	13	130	6	21	3	14	8	191	18	433
05:30 PM	16	3	18	9	118	3	22	4	25	10	158	26	412
05:45 PM	17	3	10	14	154	7	24	2	18	7	168	32	456
Total	60	16	59	46	541	25	86	13	76	28	696	100	1746
Grand Total	101	25	121	132	1955	102	184	39	179	91	1808	224	4961
Apprch %	40.9	10.1	49	6	89.3	4.7	45.8	9.7	44.5	4.3	85.2	10.6	
Total %	2	0.5	2.4	2.7	39.4	2.1	3.7	0.8	3.6	1.8	36.4	4.5	

CITY TRAFFIC COUNTERS

www.ctcounters.com

File Name : Maryland_Broadway
Site Code : 00000000
Start Date : 12/1/2016
Page No : 2

	Maryland Ave Southbound				Broadway Westbound				Maryland Ave Northbound				Broadway Eastbound				
Start Time	Left	Thru	Right	App. Total	Left	Thru	Right	App. Total	Left	Thru	Right	App. Total	Left	Thru	Right	App. Total	Int. Total
Peak Hour Analysis From 07:00 AM to 11:45 AM - Peak 1 of 1																	
Peak Hour for Entire Intersection Begins at 08:00 AM																	
08:00 AM	2	0	0	2	10	137	9	156	**8**	1	2	11	5	76	4	85	254
08:15 AM	1	0	2	3	10	138	8	156	2	1	5	8	4	64	**9**	77	244
08:30 AM	2	**1**	2	5	**11**	**143**	**14**	**168**	6	**4**	**8**	**18**	**11**	64	2	77	268
08:45 AM	**4**	1	**5**	**10**	3	141	12	156	4	3	5	12	8	**97**	5	**110**	**288**
Total Volume	9	2	9	20	34	559	43	636	20	9	20	49	28	301	20	349	1054
% App. Total	45	10	45		5.3	87.9	6.8		40.8	18.4	40.8		8	86.2	5.7		
PHF	.563	.500	.450	.500	.773	.977	.768	.946	.625	.563	.625	.681	.636	.776	.556	.793	.915

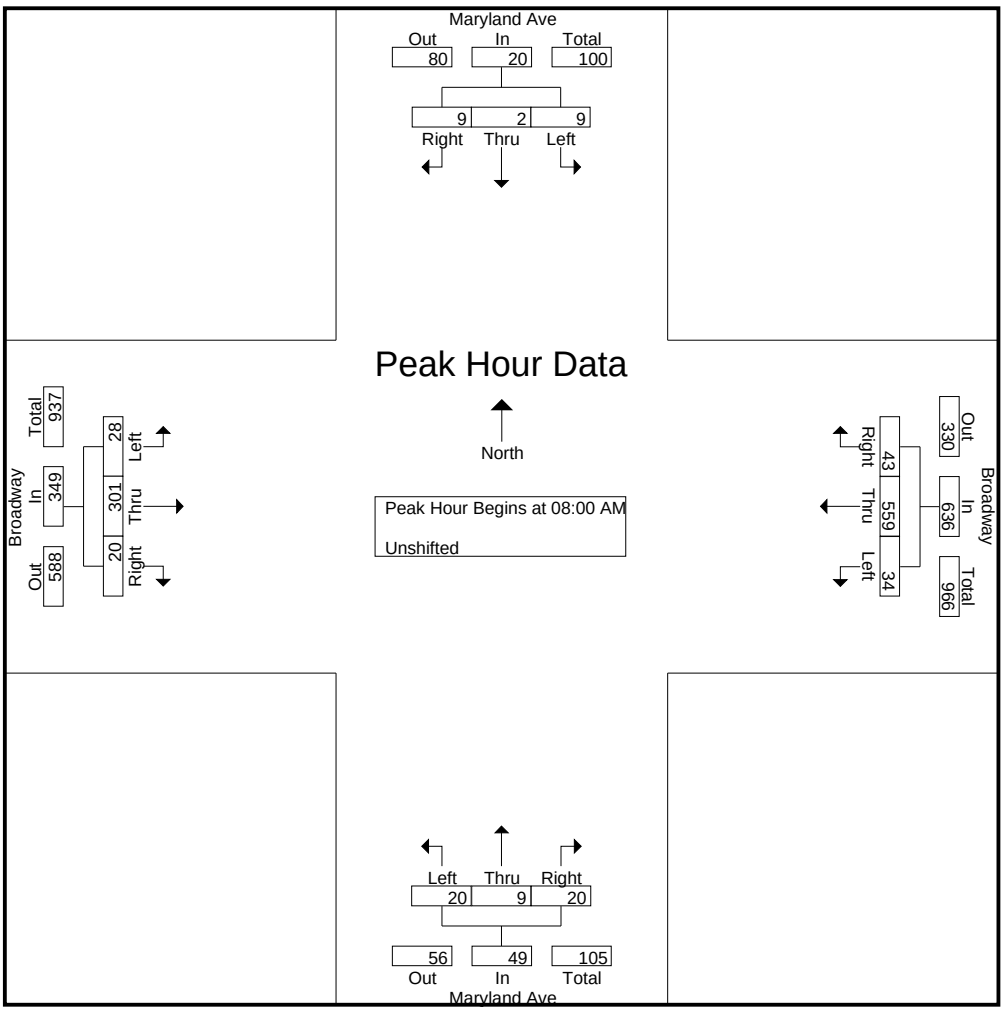

CITY TRAFFIC COUNTERS

www.ctcounters.com

File Name : Maryland_Broadway
Site Code : 00000000
Start Date : 12/1/2016
Page No : 3

	Maryland Ave Southbound				Broadway Westbound				Maryland Ave Northbound				Broadway Eastbound				
Start Time	Left	Thru	Right	App. Total	Left	Thru	Right	App. Total	Left	Thru	Right	App. Total	Left	Thru	Right	App. Total	Int. Total
Peak Hour Analysis From 12:00 PM to 05:45 PM - Peak 1 of 1																	
Peak Hour for Entire Intersection Begins at 05:00 PM																	
05:00 PM	14	**7**	**18**	**39**	10	139	**9**	158	19	**4**	19	42	3	179	24	206	445
05:15 PM	13	3	13	29	13	130	6	149	21	3	14	38	8	**191**	18	**217**	433
05:30 PM	16	3	18	37	9	118	3	130	22	4	**25**	**51**	**10**	158	26	194	412
05:45 PM	**17**	3	10	30	**14**	**154**	7	**175**	**24**	2	18	44	7	168	**32**	207	**456**
Total Volume	60	16	59	135	46	541	25	612	86	13	76	175	28	696	100	824	1746
% App. Total	44.4	11.9	43.7		7.5	88.4	4.1		49.1	7.4	43.4		3.4	84.5	12.1		
PHF	.882	.571	.819	.865	.821	.878	.694	.874	.896	.813	.760	.858	.700	.911	.781	.949	.957

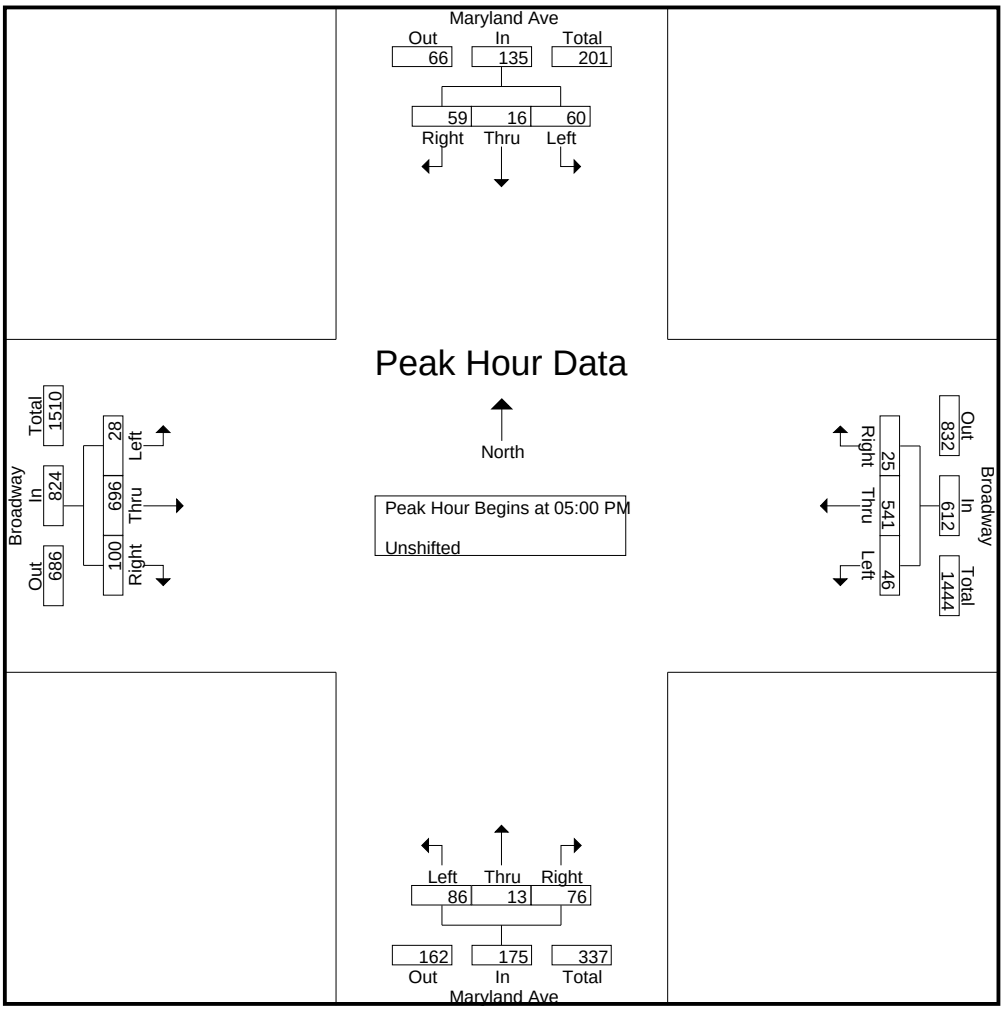

CITY TRAFFIC COUNTERS

www.ctcounters.com

File Name : Louise_Broadway
Site Code : 00000000
Start Date : 4/12/2017
Page No : 1

Groups Printed- Unshifted

	Louise St Southbound			Broadway Westbound			Louise St Northbound			Broadway Eastbound			
Start Time	Left	Thru	Right	Left	Thru	Right	Left	Thru	Right	Left	Thru	Right	Int. Total
07:00 AM	5	19	4	5	46	6	3	11	3	4	24	4	134
07:15 AM	4	14	3	5	73	10	4	20	4	2	37	6	182
07:30 AM	5	19	3	4	84	13	3	17	4	3	50	1	206
07:45 AM	12	46	6	9	142	10	1	28	7	8	67	9	345
Total	26	98	16	23	345	39	11	76	18	17	178	20	867
08:00 AM	7	40	7	4	129	9	10	13	12	9	55	7	302
08:15 AM	9	27	5	4	131	10	9	19	7	5	57	3	286
08:30 AM	11	36	5	10	137	9	6	19	11	7	64	3	318
08:45 AM	9	34	3	10	152	17	4	16	7	8	73	6	339
Total	36	137	20	28	549	45	29	67	37	29	249	19	1245
04:00 PM	12	54	12	1	113	18	4	24	5	21	153	7	424
04:15 PM	14	41	11	6	125	15	8	38	7	10	161	7	443
04:30 PM	15	61	14	3	113	16	9	48	7	13	187	11	497
04:45 PM	8	67	14	4	112	11	4	43	9	16	157	9	454
Total	49	223	51	14	463	60	25	153	28	60	658	34	1818
05:00 PM	10	62	11	7	121	18	11	73	14	18	169	7	521
05:15 PM	17	50	8	6	114	22	6	63	11	6	159	18	480
05:30 PM	12	85	6	3	144	28	14	68	10	16	176	5	567
05:45 PM	7	56	6	4	147	21	3	65	15	16	171	11	522
Total	46	253	31	20	526	89	34	269	50	56	675	41	2090
06:00 PM	11	63	12	4	132	18	9	62	13	26	150	14	514
06:15 PM	10	57	16	7	131	18	6	64	8	7	194	12	530
Grand Total	178	831	146	96	2146	269	114	691	154	195	2104	140	7064
Apprch %	15.4	71.9	12.6	3.8	85.5	10.7	11.9	72.1	16.1	8	86.3	5.7	
Total %	2.5	11.8	2.1	1.4	30.4	3.8	1.6	9.8	2.2	2.8	29.8	2	

CITY TRAFFIC COUNTERS

www.ctcounters.com

File Name : Louise_Broadway
Site Code : 00000000
Start Date : 4/12/2017
Page No : 2

	Louise St Southbound				Broadway Westbound				Louise St Northbound				Broadway Eastbound				
Start Time	Left	Thru	Right	App. Total	Left	Thru	Right	App. Total	Left	Thru	Right	App. Total	Left	Thru	Right	App. Total	Int. Total
Peak Hour Analysis From 07:00 AM to 11:45 AM - Peak 1 of 1																	
Peak Hour for Entire Intersection Begins at 07:45 AM																	
07:45 AM	**12**	**46**	6	**64**	9	**142**	**10**	**161**	1	**28**	7	**36**	8	**67**	**9**	**84**	**345**
08:00 AM	7	40	**7**	54	4	129	9	142	**10**	13	**12**	35	**9**	55	7	71	302
08:15 AM	9	27	5	41	4	131	10	145	9	19	7	35	5	57	3	65	286
08:30 AM	11	36	5	52	**10**	137	9	156	6	19	11	36	7	64	3	74	318
Total Volume	39	149	23	211	27	539	38	604	26	79	37	142	29	243	22	294	1251
% App. Total	18.5	70.6	10.9		4.5	89.2	6.3		18.3	55.6	26.1		9.9	82.7	7.5		
PHF	.813	.810	.821	.824	.675	.949	.950	.938	.650	.705	.771	.986	.806	.907	.611	.875	.907

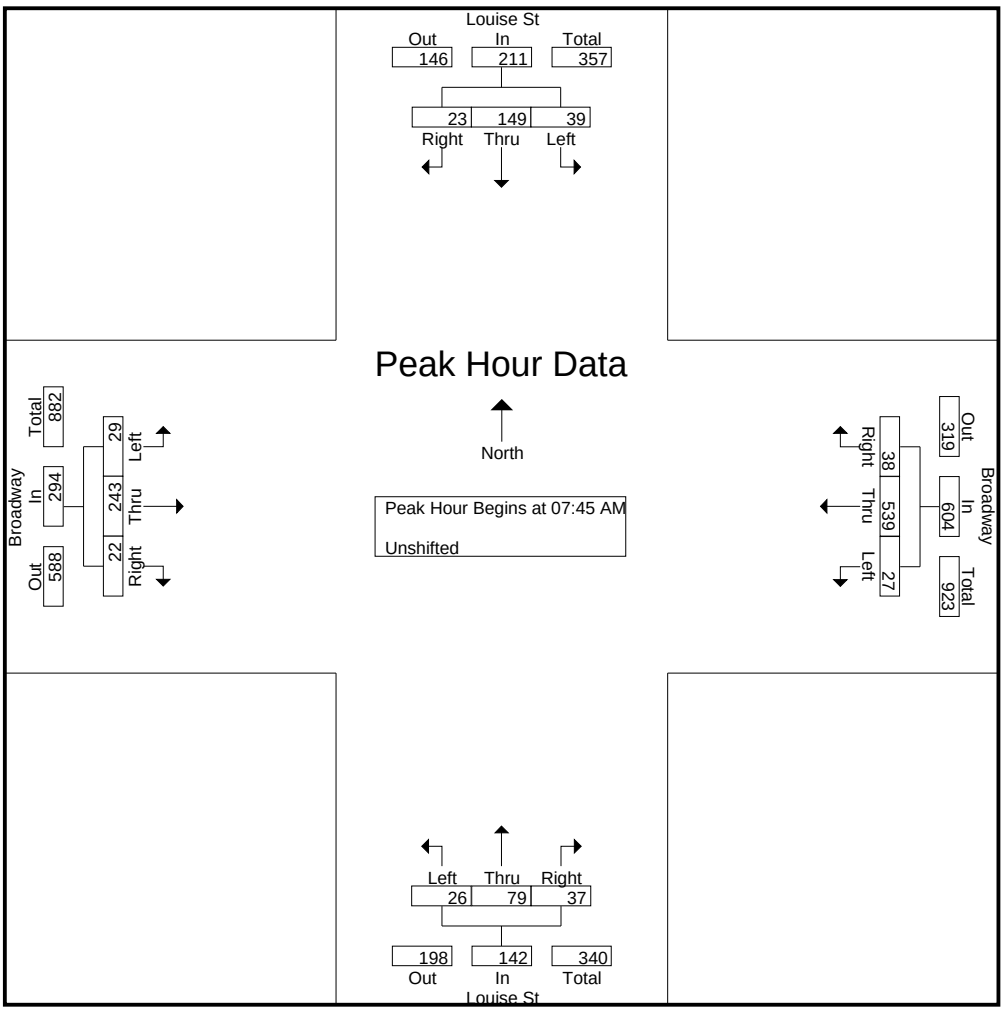

CITY TRAFFIC COUNTERS

www.ctcounters.com

File Name : Louise_Broadway
Site Code : 00000000
Start Date : 4/12/2017
Page No : 3

	Louise St Southbound				Broadway Westbound				Louise St Northbound				Broadway Eastbound				
Start Time	Left	Thru	Right	App. Total	Left	Thru	Right	App. Total	Left	Thru	Right	App. Total	Left	Thru	Right	App. Total	Int. Total
Peak Hour Analysis From 12:00 PM to 06:15 PM - Peak 1 of 1																	
Peak Hour for Entire Intersection Begins at 05:30 PM																	
05:30 PM	**12**	**85**	6	**103**	3	144	**28**	**175**	**14**	**68**	10	**92**	16	176	5	197	**567**
05:45 PM	7	56	6	69	4	**147**	21	172	3	65	**15**	83	16	171	11	198	522
06:00 PM	11	63	12	86	4	132	18	154	9	62	13	84	**26**	150	**14**	190	514
06:15 PM	10	57	**16**	83	**7**	131	18	156	6	64	8	78	7	**194**	12	**213**	530
Total Volume	40	261	40	341	18	554	85	657	32	259	46	337	65	691	42	798	2133
% App. Total	11.7	76.5	11.7		2.7	84.3	12.9		9.5	76.9	13.6		8.1	86.6	5.3		
PHF	.833	.768	.625	.828	.643	.942	.759	.939	.571	.952	.767	.916	.625	.890	.750	.937	.940

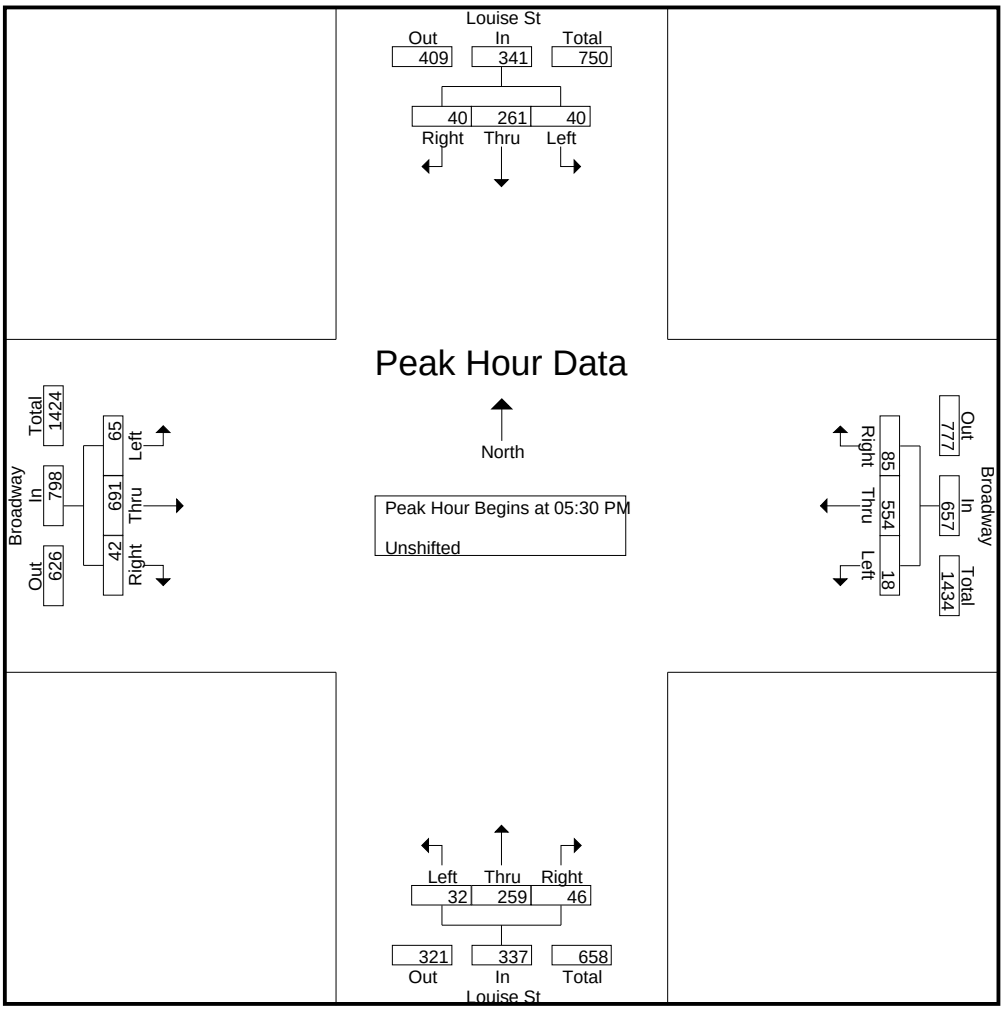

CITY TRAFFIC COUNTERS

www.ctcounters.com

File Name : Kenwood_Broadway
Site Code : 00000000
Start Date : 9/26/2017
Page No : 1

Groups Printed- Unshifted

	Kenwood St Southbound			Broadway Westbound			Kenwood St Northbound			Broadway Eastbound			
Start Time	Left	Thru	Right	Left	Thru	Right	Left	Thru	Right	Left	Thru	Right	Int. Total
07:00 AM	1	8	3	2	51	4	0	3	1	3	35	0	111
07:15 AM	1	9	3	0	65	2	0	5	3	10	41	0	139
07:30 AM	3	9	5	3	95	9	1	6	1	3	74	6	215
07:45 AM	2	12	11	9	134	10	4	10	6	8	75	3	284
Total	7	38	22	14	345	25	5	24	11	24	225	9	749
08:00 AM	5	10	4	8	146	5	5	9	4	2	57	1	256
08:15 AM	0	11	6	6	137	1	1	9	6	3	62	4	246
08:30 AM	2	16	1	4	168	9	2	8	4	4	62	3	283
08:45 AM	0	5	7	4	194	10	2	7	7	1	69	2	308
Total	7	42	18	22	645	25	10	33	21	10	250	10	1093
03:00 PM	4	9	10	4	85	14	4	15	6	11	111	5	278
03:15 PM	6	11	9	1	102	7	2	8	4	13	120	4	287
03:30 PM	5	12	14	6	125	4	3	14	7	7	112	6	315
03:45 PM	1	3	14	4	108	11	1	13	2	8	109	3	277
Total	16	35	47	15	420	36	10	50	19	39	452	18	1157
04:00 PM	2	6	8	2	111	4	0	21	3	8	139	6	310
04:15 PM	6	11	11	4	94	6	0	9	4	14	131	3	293
04:30 PM	1	6	10	3	109	13	1	16	7	8	126	6	306
04:45 PM	3	7	17	3	139	8	4	12	9	12	135	1	350
Total	12	30	46	12	453	31	5	58	23	42	531	16	1259
05:00 PM	7	10	12	3	149	5	4	18	3	11	171	7	400
05:15 PM	10	16	9	2	120	12	7	20	7	9	185	5	402
05:30 PM	5	8	10	5	122	7	8	19	7	8	169	5	373
05:45 PM	9	8	9	4	113	9	3	17	5	8	156	5	346
Total	31	42	40	14	504	33	22	74	22	36	681	22	1521
06:00 PM	2	16	8	2	97	5	3	12	8	6	158	7	324
06:15 PM	3	10	5	2	131	4	1	14	4	9	127	3	313
06:30 PM	3	5	6	3	123	4	1	11	5	7	136	3	307
06:45 PM	4	12	5	3	100	6	5	12	5	2	120	6	280
Total	12	43	24	10	451	19	10	49	22	24	541	19	1224
Grand Total	85	230	197	87	2818	169	62	288	118	175	2680	94	7003
Apprch %	16.6	44.9	38.5	2.8	91.7	5.5	13.2	61.5	25.2	5.9	90.9	3.2	
Total %	1.2	3.3	2.8	1.2	40.2	2.4	0.9	4.1	1.7	2.5	38.3	1.3	

CITY TRAFFIC COUNTERS

www.ctcounters.com

File Name : Kenwood_Broadway
Site Code : 00000000
Start Date : 9/26/2017
Page No : 2

	Kenwood St Southbound				Broadway Westbound				Kenwood St Northbound				Broadway Eastbound				
Start Time	Left	Thru	Right	App. Total	Left	Thru	Right	App. Total	Left	Thru	Right	App. Total	Left	Thru	Right	App. Total	Int. Total
Peak Hour Analysis From 07:00 AM to 11:45 AM - Peak 1 of 1																	
Peak Hour for Entire Intersection Begins at 08:00 AM																	
08:00 AM	**5**	10	4	**19**	**8**	146	5	159	**5**	**9**	4	**18**	2	57	1	60	256
08:15 AM	0	11	6	17	6	137	1	144	1	9	6	16	3	62	**4**	69	246
08:30 AM	2	**16**	1	19	4	168	9	181	2	8	4	14	**4**	62	3	69	283
08:45 AM	0	5	**7**	12	4	**194**	**10**	**208**	2	7	**7**	16	1	**69**	2	**72**	**308**
Total Volume	7	42	18	67	22	645	25	692	10	33	21	64	10	250	10	270	1093
% App. Total	10.4	62.7	26.9		3.2	93.2	3.6		15.6	51.6	32.8		3.7	92.6	3.7		
PHF	.350	.656	.643	.882	.688	.831	.625	.832	.500	.917	.750	.889	.625	.906	.625	.938	.887

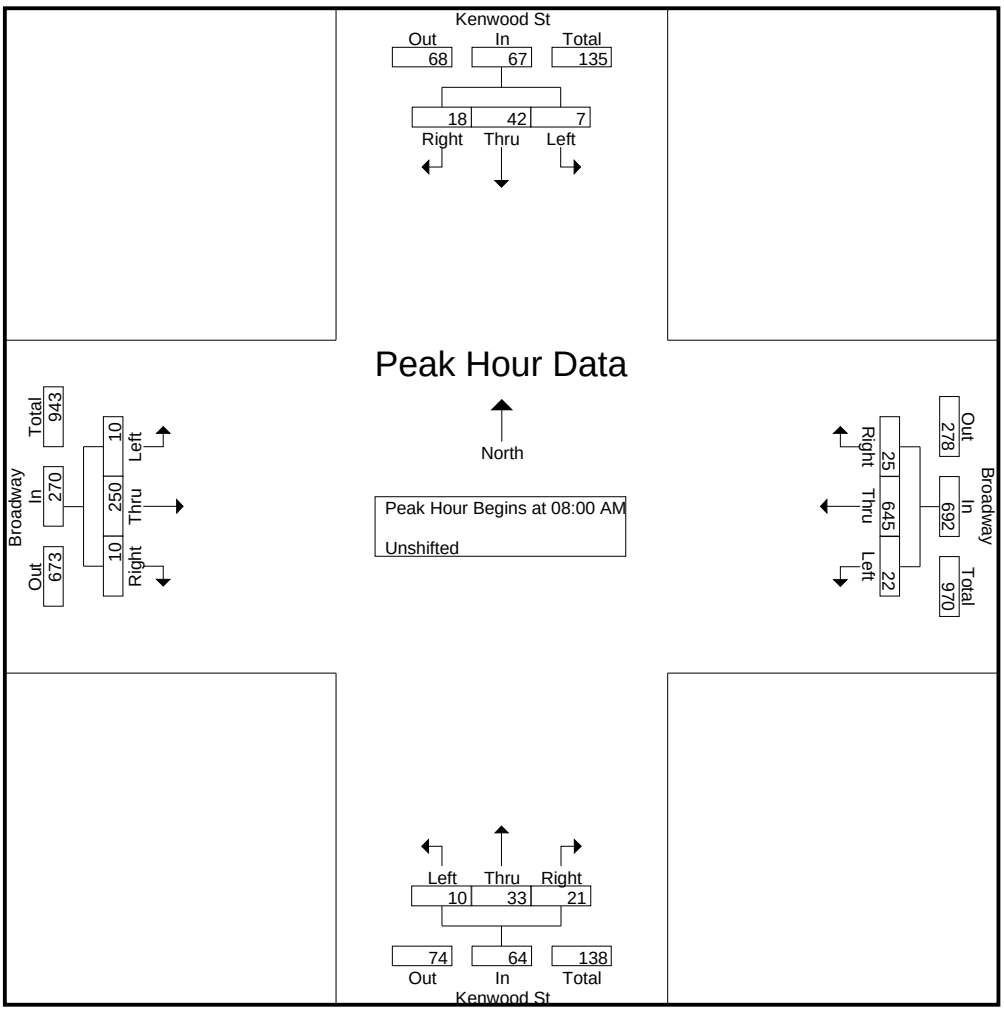

CITY TRAFFIC COUNTERS

www.ctcounters.com

File Name : Kenwood_Broadway
Site Code : 00000000
Start Date : 9/26/2017
Page No : 3

	Kenwood St Southbound				Broadway Westbound				Kenwood St Northbound				Broadway Eastbound				
Start Time	Left	Thru	Right	App. Total	Left	Thru	Right	App. Total	Left	Thru	Right	App. Total	Left	Thru	Right	App. Total	Int. Total
Peak Hour Analysis From 12:00 PM to 06:45 PM - Peak 1 of 1																	
Peak Hour for Entire Intersection Begins at 04:45 PM																	
04:45 PM	3	7	**17**	27	3	139	8	150	4	12	**9**	25	**12**	135	1	148	350
05:00 PM	7	10	12	29	3	**149**	5	**157**	4	18	3	25	11	171	**7**	189	400
05:15 PM	**10**	**16**	9	**35**	2	120	**12**	134	7	**20**	7	**34**	9	**185**	5	**199**	**402**
05:30 PM	5	8	10	23	**5**	122	7	134	**8**	19	7	34	8	169	5	182	373
Total Volume	25	41	48	114	13	530	32	575	23	69	26	118	40	660	18	718	1525
% App. Total	21.9	36	42.1		2.3	92.2	5.6		19.5	58.5	22		5.6	91.9	2.5		
PHF	.625	.641	.706	.814	.650	.889	.667	.916	.719	.863	.722	.868	.833	.892	.643	.902	.948

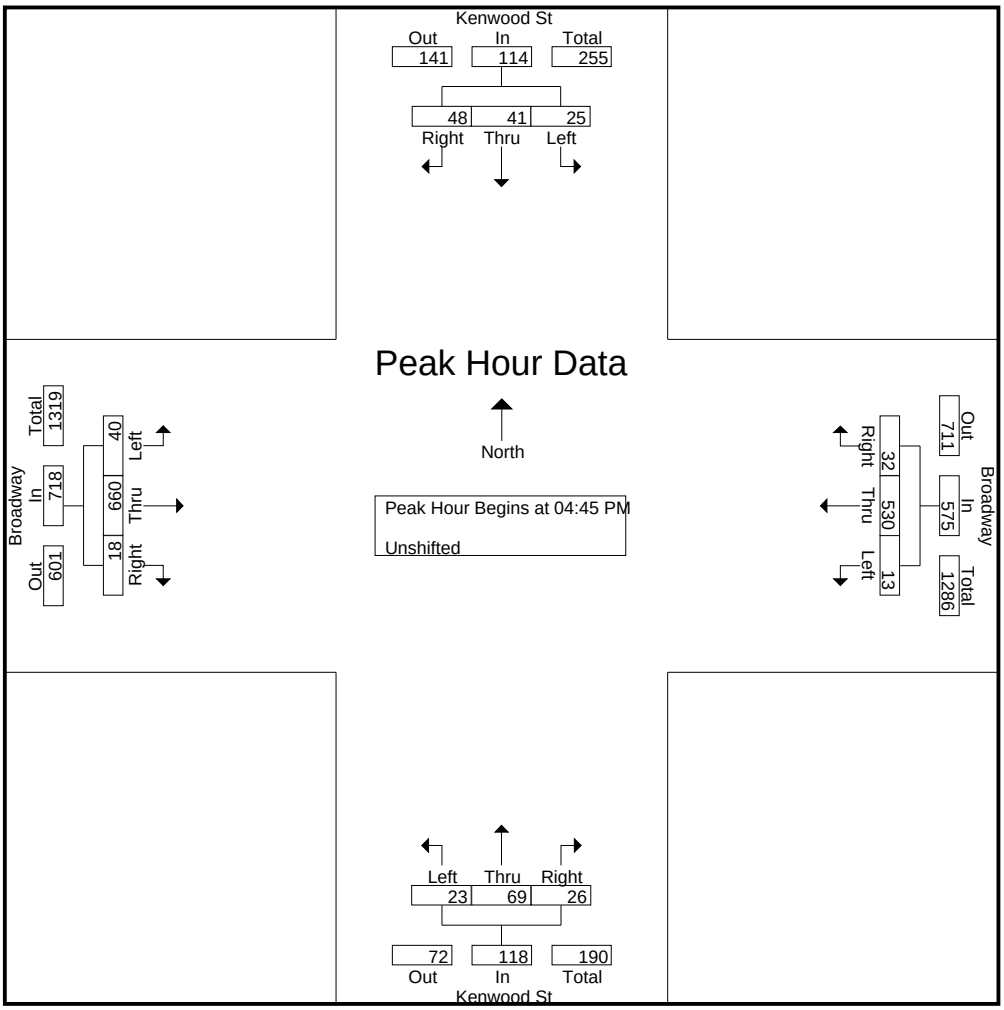

CITY TRAFFIC COUNTERS

www.ctcounters.com

File Name : Jackson_Broadway
Site Code : 00000000
Start Date : 9/21/2017
Page No : 1

Groups Printed- Unshifted

	Jackson St Southbound			Broadway Westbound			Jackson St Northbound			Broadway Eastbound			
Start Time	Left	Thru	Right	Left	Thru	Right	Left	Thru	Right	Left	Thru	Right	Int. Total
07:00 AM	7	22	8	1	42	3	3	9	3	2	28	0	128
07:15 AM	12	27	6	2	71	9	2	11	7	2	48	1	198
07:30 AM	13	26	8	4	81	8	6	24	8	6	64	3	251
07:45 AM	13	39	8	9	134	9	4	28	7	2	59	6	318
Total	45	114	30	16	328	29	15	72	25	12	199	10	895
08:00 AM	10	48	11	4	129	8	3	23	5	1	41	1	284
08:15 AM	7	36	5	4	90	5	5	27	6	6	46	5	242
08:30 AM	12	37	6	5	117	9	9	25	7	5	62	2	296
08:45 AM	13	33	8	5	146	12	5	26	7	6	62	3	326
Total	42	154	30	18	482	34	22	101	25	18	211	11	1148
03:00 PM	18	31	8	4	101	9	5	28	10	6	153	7	380
03:15 PM	11	31	9	7	111	14	6	33	3	5	101	4	335
03:30 PM	12	28	8	3	136	6	1	23	4	6	112	6	345
03:45 PM	15	30	7	6	92	2	6	34	6	5	127	7	337
Total	56	120	32	20	440	31	18	118	23	22	493	24	1397
04:00 PM	10	28	13	4	125	5	7	26	4	13	119	4	358
04:15 PM	15	27	16	4	143	8	9	38	6	7	156	8	437
04:30 PM	12	32	6	10	107	4	11	37	7	6	131	5	368
04:45 PM	17	23	13	4	140	13	6	48	7	4	150	7	432
Total	54	110	48	22	515	30	33	149	24	30	556	24	1595
05:00 PM	13	22	10	3	132	8	9	47	9	9	146	6	414
05:15 PM	19	39	9	15	98	11	6	49	17	8	182	2	455
05:30 PM	24	27	7	4	152	15	7	38	7	12	137	3	433
05:45 PM	10	33	13	4	126	16	8	42	9	10	161	7	439
Total	66	121	39	26	508	50	30	176	42	39	626	18	1741
06:00 PM	12	42	10	1	155	16	5	39	8	6	159	6	459
06:15 PM	13	29	10	8	117	10	7	40	6	11	132	4	387
06:30 PM	9	25	4	4	114	5	6	24	7	5	146	8	357
06:45 PM	6	29	12	3	103	13	2	27	8	9	164	6	382
Total	40	125	36	16	489	44	20	130	29	31	601	24	1585
Grand Total	303	744	215	118	2762	218	138	746	168	152	2686	111	8361
Apprch %	24	59	17	3.8	89.2	7	13.1	70.9	16	5.2	91.1	3.8	
Total %	3.6	8.9	2.6	1.4	33	2.6	1.7	8.9	2	1.8	32.1	1.3	

CITY TRAFFIC COUNTERS

www.ctcounters.com

File Name : Jackson_Broadway
Site Code : 00000000
Start Date : 9/21/2017
Page No : 2

	Jackson St Southbound				Broadway Westbound				Jackson St Northbound				Broadway Eastbound				
Start Time	Left	Thru	Right	App. Total	Left	Thru	Right	App. Total	Left	Thru	Right	App. Total	Left	Thru	Right	App. Total	Int. Total
Peak Hour Analysis From 07:00 AM to 11:45 AM - Peak 1 of 1																	
Peak Hour for Entire Intersection Begins at 08:00 AM																	
08:00 AM	10	**48**	**11**	**69**	4	129	8	141	3	23	5	31	1	41	1	43	284
08:15 AM	7	36	5	48	4	90	5	99	5	**27**	6	38	**6**	46	**5**	57	242
08:30 AM	12	37	6	55	**5**	117	9	131	**9**	25	**7**	**41**	5	**62**	2	69	296
08:45 AM	**13**	33	8	54	5	**146**	**12**	**163**	5	26	7	38	6	62	3	**71**	**326**
Total Volume	42	154	30	226	18	482	34	534	22	101	25	148	18	211	11	240	1148
% App. Total	18.6	68.1	13.3		3.4	90.3	6.4		14.9	68.2	16.9		7.5	87.9	4.6		
PHF	.808	.802	.682	.819	.900	.825	.708	.819	.611	.935	.893	.902	.750	.851	.550	.845	.880

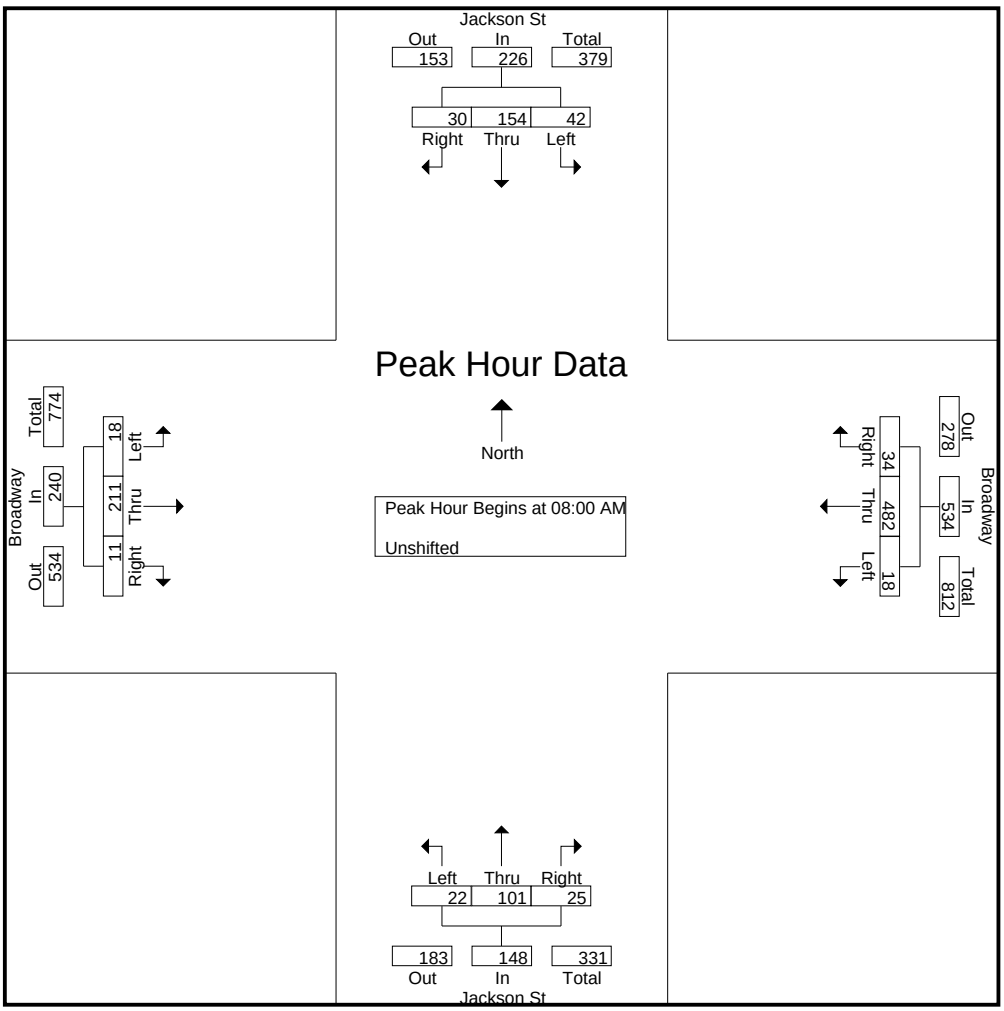

CITY TRAFFIC COUNTERS

www.ctcounters.com

File Name : Jackson_Broadway
Site Code : 00000000
Start Date : 9/21/2017
Page No : 3

	Jackson St Southbound				Broadway Westbound				Jackson St Northbound				Broadway Eastbound				
Start Time	Left	Thru	Right	App. Total	Left	Thru	Right	App. Total	Left	Thru	Right	App. Total	Left	Thru	Right	App. Total	Int. Total
Peak Hour Analysis From 12:00 PM to 06:45 PM - Peak 1 of 1																	
Peak Hour for Entire Intersection Begins at 05:15 PM																	
05:15 PM	19	39	9	**67**	**15**	98	11	124	6	**49**	**17**	**72**	8	**182**	2	**192**	455
05:30 PM	**24**	27	7	58	4	152	15	171	7	38	7	52	**12**	137	3	152	433
05:45 PM	10	33	**13**	56	4	126	**16**	146	**8**	42	9	59	10	161	**7**	178	439
06:00 PM	12	**42**	10	64	1	**155**	16	**172**	5	39	8	52	6	159	6	171	**459**
Total Volume	65	141	39	245	24	531	58	613	26	168	41	235	36	639	18	693	1786
% App. Total	26.5	57.6	15.9		3.9	86.6	9.5		11.1	71.5	17.4		5.2	92.2	2.6		
PHF	.677	.839	.750	.914	.400	.856	.906	.891	.813	.857	.603	.816	.750	.878	.643	.902	.973

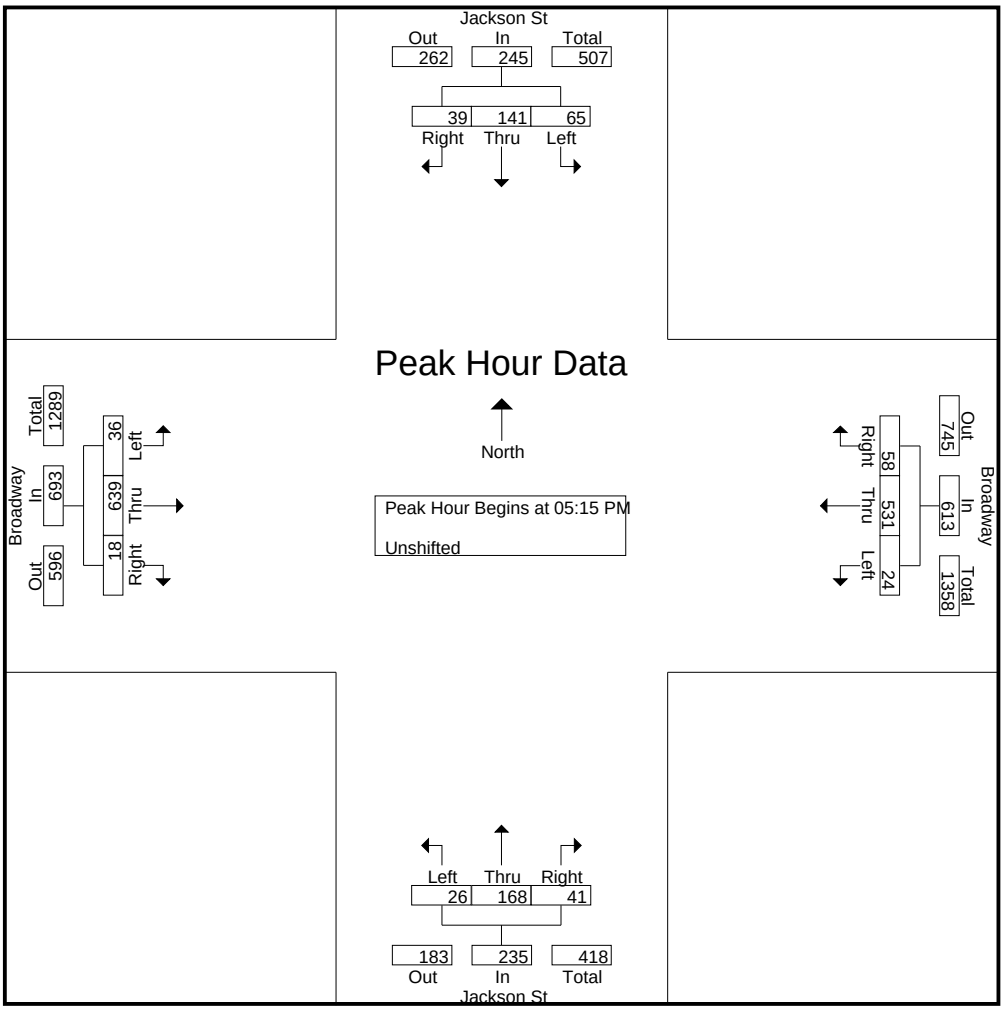

CITY TRAFFIC COUNTERS
www.ctcounters.com

California Ave
E/O Jackson St

Start Time	18-Oct-17 Wed	West Morning	West Afternoon	Hour Totals Morning	Hour Totals Afternoon
12:00		13	75		
12:15		5	90		
12:30		7	73		
12:45		8	92	33	330
01:00		3	75		
01:15		1	80		
01:30		1	80		
01:45		0	89	5	324
02:00		0	87		
02:15		2	77		
02:30		1	88		
02:45		2	54	5	306
03:00		1	63		
03:15		1	83		
03:30		0	72		
03:45		1	64	3	282
04:00		2	87		
04:15		2	67		
04:30		0	79		
04:45		5	73	9	306
05:00		3	72		
05:15		4	73		
05:30		1	90		
05:45		8	87	16	322
06:00		9	83		
06:15		12	82		
06:30		10	66		
06:45		18	79	49	310
07:00		21	75		
07:15		26	70		
07:30		48	55		
07:45		99	44	194	244
08:00		105	63		
08:15		89	59		
08:30		74	59		
08:45		75	40	343	221
09:00		72	47		
09:15		57	34		
09:30		60	46		
09:45		47	32	236	159
10:00		56	25		
10:15		65	22		
10:30		50	19		
10:45		67	21	238	87
11:00		56	11		
11:15		71	13		
11:30		67	17		
11:45		76	9	270	50
Total		1401	2941		
Percent		32.3%	67.7%		
Grand Total		1401	2941		
Percent		32.3%	67.7%		
ADT		ADT 4,342		AADT 4,342	

CITY TRAFFIC COUNTERS
www.ctcounters.com

California Ave
W/O Jackson St

Start Time	18-Oct-17 Wed	East Morning	East Afternoon	Hour Totals Morning	Hour Totals Afternoon
12:00		8	71		
12:15		9	60		
12:30		4	84		
12:45		7	64	28	279
01:00		4	71		
01:15		7	71		
01:30		2	73		
01:45		2	66	15	281
02:00		1	63		
02:15		2	56		
02:30		1	82		
02:45		3	80	7	281
03:00		1	74		
03:15		0	52		
03:30		1	73		
03:45		0	78	2	277
04:00		1	79		
04:15		1	80		
04:30		0	88		
04:45		1	77	3	324
05:00		0	69		
05:15		3	85		
05:30		2	95		
05:45		4	96	9	345
06:00		6	89		
06:15		8	92		
06:30		14	79		
06:45		16	79	44	339
07:00		23	70		
07:15		24	61		
07:30		57	54		
07:45		59	57	163	242
08:00		51	52		
08:15		46	43		
08:30		43	43		
08:45		38	29	178	167
09:00		43	31		
09:15		41	40		
09:30		46	32		
09:45		44	19	174	122
10:00		54	24		
10:15		45	18		
10:30		56	24		
10:45		49	21	204	87
11:00		58	15		
11:15		48	14		
11:30		88	14		
11:45		67	9	261	52
Total		1088	2796		
Percent		28.0%	72.0%		
Grand Total		1088	2796		
Percent		28.0%	72.0%		
ADT		ADT 3,884		AADT 3,884	

CITY TRAFFIC COUNTERS
www.ctcounters.com

Jackson St
N/O California Ave

Start Time	18-Oct-17 Wed	South Morning	South Afternoon	Hour Totals Morning	Hour Totals Afternoon
12:00		4	60		
12:15		8	88		
12:30		6	59		
12:45		5	86	23	293
01:00		4	52		
01:15		1	67		
01:30		2	81		
01:45		1	67	8	267
02:00		3	75		
02:15		2	62		
02:30		2	59		
02:45		3	73	10	269
03:00		1	69		
03:15		1	78		
03:30		2	78		
03:45		0	75	4	300
04:00		1	60		
04:15		4	75		
04:30		1	77		
04:45		8	62	14	274
05:00		0	88		
05:15		3	82		
05:30		11	88		
05:45		9	70	23	328
06:00		11	77		
06:15		13	76		
06:30		13	61		
06:45		42	67	79	281
07:00		42	69		
07:15		73	59		
07:30		86	47		
07:45		110	41	311	216
08:00		81	33		
08:15		54	35		
08:30		85	41		
08:45		74	31	294	140
09:00		58	29		
09:15		66	21		
09:30		59	24		
09:45		50	27	233	101
10:00		55	18		
10:15		60	14		
10:30		59	14		
10:45		52	12	226	58
11:00		68	8		
11:15		64	10		
11:30		61	5		
11:45		83	4	276	27
Total		1501	2554		
Percent		37.0%	63.0%		
Grand Total		1501	2554		
Percent		37.0%	63.0%		
ADT		ADT 4,055		AADT 4,055	

CITY TRAFFIC COUNTERS
www.ctcounters.com

Jackson St
S/O California Ave

Start Time	18-Oct-17 Wed	North Morning	North Afternoon	Hour Totals Morning	Hour Totals Afternoon
12:00		5	0		
12:15		6	2		
12:30		1	72		
12:45		2	72	14	146
01:00		5	80		
01:15		2	58		
01:30		1	68		
01:45		3	66	11	272
02:00		5	68		
02:15		2	50		
02:30		0	71		
02:45		1	78	8	267
03:00		1	61		
03:15		1	64		
03:30		1	64		
03:45		0	65	3	254
04:00		0	80		
04:15		3	68		
04:30		2	87		
04:45		5	80	10	315
05:00		2	102		
05:15		3	67		
05:30		4	89		
05:45		2	89	11	347
06:00		5	103		
06:15		10	72		
06:30		5	44		
06:45		13	69	33	288
07:00		10	79		
07:15		28	54		
07:30		36	39		
07:45		51	51	125	223
08:00		38	59		
08:15		54	26		
08:30		40	36		
08:45		59	38	191	159
09:00		38	25		
09:15		33	44		
09:30		42	24		
09:45		38	16	151	109
10:00		37	55		
10:15		46	19		
10:30		37	16		
10:45		35	11	155	101
11:00		38	8		
11:15		38	11		
11:30		0	7		
11:45		0	11	76	37
Total		788	2518		
Percent		23.8%	76.2%		
Grand Total		788	2518		
Percent		23.8%	76.2%		
ADT		ADT 3,306		AADT 3,306	

CITY TRAFFIC COUNTERS
www.ctcounters.com

California Ave
E/O Louise St

Start Time	18-Oct-17 Wed	West Morning	West Afternoon	Hour Totals Morning	Hour Totals Afternoon
12:00		11	60		
12:15		6	65		
12:30		7	73		
12:45		4	75	28	273
01:00		4	70		
01:15		1	64		
01:30		1	75		
01:45		0	71	6	280
02:00		0	77		
02:15		1	68		
02:30		1	35		
02:45		0	59	2	239
03:00		0	56		
03:15		1	59		
03:30		0	78		
03:45		1	64	2	257
04:00		0	73		
04:15		4	58		
04:30		2	68		
04:45		6	60	12	259
05:00		4	68		
05:15		5	71		
05:30		5	89		
05:45		8	59	22	287
06:00		9	72		
06:15		11	66		
06:30		18	64		
06:45		25	57	63	259
07:00		25	67		
07:15		28	29		
07:30		37	41		
07:45		80	39	170	176
08:00		106	50		
08:15		86	59		
08:30		90	55		
08:45		80	35	362	199
09:00		68	41		
09:15		52	31		
09:30		64	25		
09:45		50	35	234	132
10:00		58	26		
10:15		69	20		
10:30		43	20		
10:45		61	21	231	87
11:00		50	10		
11:15		63	13		
11:30		69	12		
11:45		62	7	244	42
Total		1376	2490		
Percent		35.6%	64.4%		
Grand Total		1376	2490		
Percent		35.6%	64.4%		
ADT		ADT 3,866		AADT 3,866	

CITY TRAFFIC COUNTERS
www.ctcounters.com

California Ave
W/O Louise St

Start Time	18-Oct-17 Wed	East Morning	East Afternoon	Hour Totals Morning	Hour Totals Afternoon
12:00		3	64		
12:15		4	44		
12:30		1	58		
12:45		1	63	9	229
01:00		3	46		
01:15		1	59		
01:30		2	54		
01:45		3	45	9	204
02:00		1	65		
02:15		1	54		
02:30		1	56		
02:45		1	68	4	243
03:00		0	83		
03:15		1	58		
03:30		1	63		
03:45		1	56	3	260
04:00		0	58		
04:15		2	81		
04:30		3	57		
04:45		4	60	9	256
05:00		1	60		
05:15		1	68		
05:30		7	74		
05:45		12	72	21	274
06:00		6	75		
06:15		7	66		
06:30		5	63		
06:45		22	57	40	261
07:00		25	68		
07:15		31	51		
07:30		33	61		
07:45		44	62	133	242
08:00		58	46		
08:15		43	35		
08:30		37	53		
08:45		46	33	184	167
09:00		42	51		
09:15		45	28		
09:30		44	18		
09:45		38	16	169	113
10:00		30	20		
10:15		36	14		
10:30		33	16		
10:45		47	15	146	65
11:00		45	16		
11:15		55	8		
11:30		38	8		
11:45		38	9	176	41
Total		903	2355		
Percent		27.7%	72.3%		
Grand Total		903	2355		
Percent		27.7%	72.3%		
ADT		ADT 3,258		AADT 3,258	

CITY TRAFFIC COUNTERS
www.ctcounters.com

Louise Street
N/O California Ave

Start Time	18-Oct-17 Wed	South Morning	South Afternoon	Hour Totals Morning	Hour Totals Afternoon
12:00		5	66		
12:15		4	55		
12:30		3	49		
12:45		2	45	14	215
01:00		2	50		
01:15		3	43		
01:30		0	65		
01:45		2	46	7	204
02:00		0	50		
02:15		1	49		
02:30		0	65		
02:45		2	64	3	228
03:00		2	65		
03:15		0	61		
03:30		1	69		
03:45		0	73	3	268
04:00		0	71		
04:15		0	71		
04:30		2	86		
04:45		0	67	2	295
05:00		8	82		
05:15		1	82		
05:30		3	77		
05:45		6	88	18	329
06:00		6	71		
06:15		8	68		
06:30		17	61		
06:45		20	45	51	245
07:00		24	64		
07:15		50	61		
07:30		63	44		
07:45		86	48	223	217
08:00		67	37		
08:15		55	23		
08:30		60	30		
08:45		41	28	223	118
09:00		50	24		
09:15		51	17		
09:30		55	17		
09:45		57	17	213	75
10:00		54	18		
10:15		49	12		
10:30		57	12		
10:45		59	4	219	46
11:00		48	9		
11:15		39	8		
11:30		54	4		
11:45		56	4	197	25
Total		1173	2265		
Percent		34.1%	65.9%		
Grand Total		1173	2265		
Percent		34.1%	65.9%		
ADT		ADT 3,438		AADT 3,438	

CITY TRAFFIC COUNTERS
www.ctcounters.com

Louise Street
S/O California Ave

Start Time	18-Oct-17 Wed	North Morning	North Afternoon	Hour Totals Morning	Hour Totals Afternoon
12:00		9	64		
12:15		11	63		
12:30		6	87		
12:45		8	60	34	274
01:00		3	60		
01:15		6	60		
01:30		1	68		
01:45		2	57	12	245
02:00		2	55		
02:15		0	60		
02:30		0	70		
02:45		2	66	4	251
03:00		1	64		
03:15		0	46		
03:30		0	67		
03:45		1	74	2	251
04:00		1	78		
04:15		0	80		
04:30		1	80		
04:45		0	77	2	315
05:00		1	85		
05:15		1	52		
05:30		3	83		
05:45		5	78	10	298
06:00		4	85		
06:15		8	82		
06:30		10	75		
06:45		17	69	39	311
07:00		12	59		
07:15		16	49		
07:30		43	47		
07:45		33	51	104	206
08:00		43	39		
08:15		40	51		
08:30		37	44		
08:45		43	26	163	160
09:00		28	31		
09:15		38	39		
09:30		44	36		
09:45		37	16	147	122
10:00		43	23		
10:15		45	20		
10:30		53	21		
10:45		55	21	196	85
11:00		57	13		
11:15		58	12		
11:30		82	15		
11:45		47	8	244	48
Total		957	2566		
Percent		27.2%	72.8%		
Grand Total		957	2566		
Percent		27.2%	72.8%		
ADT		ADT 3,523		AADT 3,523	

APPENDIX B

Level of Service Calculations

Intersection Level Of Service Report
Intersection 1: Brand Blvd & California Ave

Control Type:	Signalized	Delay (sec / veh):	-
Analysis Method:	ICU 1	Level Of Service:	A
Analysis Period:	15 minutes	Volume to Capacity (v/c):	0.538

Intersection Setup

Name	Brand Blvd			Brand Blvd			California Ave			Calfornia Ave		
Approach	Northbound			Southbound			Eastbound			Westbound		
Lane Configuration												
Turning Movement	Left	Thru	Right	Left	Thru	Right	Left	Thru	Right	Left	Thru	Right
Lane Width [ft]	12.00	12.00	12.00	12.00	12.00	12.00	12.00	12.00	12.00	12.00	12.00	12.00
No. of Lanes in Pocket	0	0	0	0	0	0	0	0	0	0	0	0
Pocket Length [ft]	100.00	100.00	100.00	100.00	100.00	100.00	100.00	100.00	100.00	100.00	100.00	100.00
Speed [mph]	30.00			30.00			30.00			30.00		
Grade [%]	0.00			0.00			0.00			0.00		
Crosswalk	Yes			Yes			Yes			Yes		

Volumes

Name	Brand Blvd			Brand Blvd			California Ave			Calfornia Ave		
Base Volume Input [veh/h]	49	450	38	34	613	112	27	138	43	28	168	52
Base Volume Adjustment Factor	1.0000	1.0000	1.0000	1.0000	1.0000	1.0000	1.0000	1.0000	1.0000	1.0000	1.0000	1.0000
Heavy Vehicles Percentage [%]	2.00	2.00	2.00	2.00	2.00	2.00	2.00	2.00	2.00	2.00	2.00	2.00
Growth Rate	1.02	1.02	1.02	1.02	1.02	1.02	1.02	1.02	1.02	1.02	1.02	1.02
In-Process Volume [veh/h]	0	0	0	0	0	0	0	0	0	0	0	0
Site-Generated Trips [veh/h]	0	0	0	0	0	0	0	0	0	0	0	0
Diverted Trips [veh/h]	0	0	0	0	0	0	0	0	0	0	0	0
Pass-by Trips [veh/h]	0	0	0	0	0	0	0	0	0	0	0	0
Existing Site Adjustment Volume [veh/h]	0	0	0	0	0	0	0	0	0	0	0	0
Other Volume [veh/h]	0	0	0	0	0	0	0	0	0	0	0	0
Total Hourly Volume [veh/h]	50	459	39	35	625	114	28	141	44	29	171	53
Peak Hour Factor	1.0000	1.0000	1.0000	1.0000	1.0000	1.0000	1.0000	1.0000	1.0000	1.0000	1.0000	1.0000
Other Adjustment Factor	1.0000	1.0000	1.0000	1.0000	1.0000	1.0000	1.0000	1.0000	1.0000	1.0000	1.0000	1.0000
Total 15-Minute Volume [veh/h]	13	115	10	9	156	29	7	35	11	7	43	13
Total Analysis Volume [veh/h]	50	459	39	35	625	114	28	141	44	29	171	53
Pedestrian Volume [ped/h]	0			0			0			0		
Bicycle Volume [bicycles/h]	0			0			0			0		

Intersection Settings

Cycle Length [s]	100
Lost time [s]	10.00

Phasing & Timing

Control Type	Protecte	Permiss	Permiss	Protecte	Permiss	Permiss	Permiss	Permiss	Permiss	Permiss	Permiss	Permiss
Signal group	1	1	0	1	1	0	0	1	0	0	1	0
Auxiliary Signal Groups												
Lead / Lag	Lag	-	-	Lag	-	-	-	-	-	-	-	-

Movement, Approach, & Intersection Results

V/C, Movement V/C Ratio	0.03	0.16	0.16	0.02	0.23	0.23	0.02	0.13	0.13	0.02	0.16	0.16
Intersection LOS	A											
Intersection V/C	0.538											

Intersection Level Of Service Report
Intersection 2: California Ave & Maryland Ave

Control Type:	Signalized	Delay (sec / veh):	-
Analysis Method:	ICU 1	Level Of Service:	A
Analysis Period:	15 minutes	Volume to Capacity (v/c):	0.373

Intersection Setup

Name	Maryland Ave			Maryland Ave			Calfornia Ave			California Ave		
Approach	Northbound			Southbound			Eastbound			Westbound		
Lane Configuration												
Turning Movement	Left	Thru	Right	Left	Thru	Right	Left	Thru	Right	Left	Thru	Right
Lane Width [ft]	12.00	12.00	12.00	12.00	12.00	12.00	12.00	12.00	12.00	12.00	12.00	12.00
No. of Lanes in Pocket	0	0	0	0	0	0	0	0	0	0	0	0
Pocket Length [ft]	100.00	100.00	100.00	100.00	100.00	100.00	100.00	100.00	100.00	100.00	100.00	100.00
Speed [mph]	30.00			30.00			30.00			30.00		
Grade [%]	0.00			0.00			0.00			0.00		
Crosswalk	Yes			Yes			Yes			Yes		

Volumes

Name	Maryland Ave			Maryland Ave			Calfornia Ave			California Ave		
Base Volume Input [veh/h]	12	79	21	10	41	3	12	220	71	31	146	19
Base Volume Adjustment Factor	1.0000	1.0000	1.0000	1.0000	1.0000	1.0000	1.0000	1.0000	1.0000	1.0000	1.0000	1.0000
Heavy Vehicles Percentage [%]	2.00	2.00	2.00	2.00	2.00	2.00	2.00	2.00	2.00	2.00	2.00	2.00
Growth Rate	1.02	1.02	1.02	1.02	1.02	1.02	1.02	1.02	1.02	1.02	1.02	1.02
In-Process Volume [veh/h]	0	0	0	0	0	0	0	0	0	0	0	0
Site-Generated Trips [veh/h]	0	0	0	0	0	0	0	0	0	0	0	0
Diverted Trips [veh/h]	0	0	0	0	0	0	0	0	0	0	0	0
Pass-by Trips [veh/h]	0	0	0	0	0	0	0	0	0	0	0	0
Existing Site Adjustment Volume [veh/h]	0	0	0	0	0	0	0	0	0	0	0	0
Other Volume [veh/h]	0	0	0	0	0	0	0	0	0	0	0	0
Total Hourly Volume [veh/h]	12	81	21	10	42	3	12	224	72	32	149	19
Peak Hour Factor	1.0000	1.0000	1.0000	1.0000	1.0000	1.0000	1.0000	1.0000	1.0000	1.0000	1.0000	1.0000
Other Adjustment Factor	1.0000	1.0000	1.0000	1.0000	1.0000	1.0000	1.0000	1.0000	1.0000	1.0000	1.0000	1.0000
Total 15-Minute Volume [veh/h]	3	20	5	3	11	1	3	56	18	8	37	5
Total Analysis Volume [veh/h]	12	81	21	10	42	3	12	224	72	32	149	19
Pedestrian Volume [ped/h]	0			0			0			0		
Bicycle Volume [bicycles/h]	0			0			0			0		

Intersection Settings

Cycle Length [s]	100
Lost time [s]	10.00

Phasing & Timing

Control Type	Split	Split	Split	Split	Split	Split	Permiss	Permiss	Permiss	Permiss	Permiss	Permiss
Signal group	0	1	0	0	1	0	0	1	0	0	1	0
Auxiliary Signal Groups												
Lead / Lag	-	-	-	-	-	-	-	-	-	-	-	-

Movement, Approach, & Intersection Results

V/C, Movement V/C Ratio	0.01	0.07	0.07	0.01	0.03	0.03	0.01	0.15	0.05	0.02	0.13	0.13
Intersection LOS	A											
Intersection V/C	0.373											

Intersection Level Of Service Report
Intersection 3: California Ave & Louise St

Control Type:	All-way stop	Delay (sec / veh):	12.3
Analysis Method:	HCM 2010	Level Of Service:	B
Analysis Period:	15 minutes	Volume to Capacity (v/c):	0.476

Intersection Setup

Name	Louise St			Louise St			California Ave			California Ave		
Approach	Northbound			Southbound			Eastbound			Westbound		
Lane Configuration												
Turning Movement	Left	Thru	Right	Left	Thru	Right	Left	Thru	Right	Left	Thru	Right
Lane Width [ft]	12.00	12.00	12.00	12.00	12.00	12.00	12.00	12.00	12.00	12.00	12.00	12.00
No. of Lanes in Pocket	0	0	0	0	0	0	0	0	0	0	0	0
Pocket Length [ft]	100.00	100.00	100.00	100.00	100.00	100.00	100.00	100.00	100.00	100.00	100.00	100.00
Speed [mph]	30.00			30.00			30.00			30.00		
Grade [%]	0.00			0.00			0.00			0.00		
Crosswalk	Yes			Yes			Yes			Yes		

Volumes

Name	Louise St			Louise St			California Ave			California Ave		
Base Volume Input [veh/h]	31	111	13	38	215	36	18	130	14	23	255	32
Base Volume Adjustment Factor	1.0000	1.0000	1.0000	1.0000	1.0000	1.0000	1.0000	1.0000	1.0000	1.0000	1.0000	1.0000
Heavy Vehicles Percentage [%]	2.00	2.00	2.00	2.00	2.00	2.00	2.00	2.00	2.00	2.00	2.00	2.00
Growth Rate	1.01	1.01	1.01	1.01	1.01	1.01	1.01	1.01	1.01	1.01	1.01	1.01
In-Process Volume [veh/h]	0	0	0	0	0	0	0	0	0	0	0	0
Site-Generated Trips [veh/h]	0	0	0	0	0	0	0	0	0	0	0	0
Diverted Trips [veh/h]	0	0	0	0	0	0	0	0	0	0	0	0
Pass-by Trips [veh/h]	0	0	0	0	0	0	0	0	0	0	0	0
Existing Site Adjustment Volume [veh/h]	0	0	0	0	0	0	0	0	0	0	0	0
Other Volume [veh/h]	0	0	0	0	0	0	0	0	0	0	0	0
Total Hourly Volume [veh/h]	31	112	13	38	217	36	18	131	14	23	258	32
Peak Hour Factor	1.0000	1.0000	1.0000	1.0000	1.0000	1.0000	1.0000	1.0000	1.0000	1.0000	1.0000	1.0000
Other Adjustment Factor	1.0000	1.0000	1.0000	1.0000	1.0000	1.0000	1.0000	1.0000	1.0000	1.0000	1.0000	1.0000
Total 15-Minute Volume [veh/h]	8	28	3	10	54	9	5	33	4	6	65	8
Total Analysis Volume [veh/h]	31	112	13	38	217	36	18	131	14	23	258	32
Pedestrian Volume [ped/h]	0			0			0			0		

Intersection Settings

Lanes

Capacity per Entry Lane [veh/h]	618	650	625	657
Degree of Utilization, x	0.25	0.45	0.26	0.48

Movement, Approach, & Intersection Results

95th-Percentile Queue Length [veh]	1.00	2.31	1.04	2.58
95th-Percentile Queue Length [ft]	24.89	57.81	26.01	64.38
Approach Delay [s/veh]	10.78	12.95	10.79	13.36
Approach LOS	B	B	B	B
Intersection Delay [s/veh]	12.34			
Intersection LOS	B			

Intersection Level Of Service Report
Intersection 4: California Ave & Kenwood St

Control Type:	All-way stop	Delay (sec / veh):	10.0
Analysis Method:	HCM 2010	Level Of Service:	B
Analysis Period:	15 minutes	Volume to Capacity (v/c):	0.415

Intersection Setup

Name	Kenwood St			Kenwood St			California Ave			California Ave		
Approach	Northbound			Southbound			Eastbound			Westbound		
Lane Configuration												
Turning Movement	Left	Thru	Right	Left	Thru	Right	Left	Thru	Right	Left	Thru	Right
Lane Width [ft]	12.00	12.00	12.00	12.00	12.00	12.00	12.00	12.00	12.00	12.00	12.00	12.00
No. of Lanes in Pocket	0	0	0	0	0	0	0	0	0	0	0	0
Pocket Length [ft]	100.00	100.00	100.00	100.00	100.00	100.00	100.00	100.00	100.00	100.00	100.00	100.00
Speed [mph]	30.00			30.00			30.00			30.00		
Grade [%]	0.00			0.00			0.00			0.00		
Crosswalk	Yes			Yes			Yes			Yes		

Volumes

Name	Kenwood St			Kenwood St			California Ave			California Ave		
Base Volume Input [veh/h]	21	42	34	21	71	16	13	136	30	11	291	13
Base Volume Adjustment Factor	1.0000	1.0000	1.0000	1.0000	1.0000	1.0000	1.0000	1.0000	1.0000	1.0000	1.0000	1.0000
Heavy Vehicles Percentage [%]	2.00	2.00	2.00	2.00	2.00	2.00	2.00	2.00	2.00	2.00	2.00	2.00
Growth Rate	1.01	1.01	1.01	1.01	1.01	1.01	1.01	1.01	1.01	1.01	1.01	1.01
In-Process Volume [veh/h]	0	0	0	0	0	0	0	0	0	0	0	0
Site-Generated Trips [veh/h]	0	0	0	0	0	0	0	0	0	0	0	0
Diverted Trips [veh/h]	0	0	0	0	0	0	0	0	0	0	0	0
Pass-by Trips [veh/h]	0	0	0	0	0	0	0	0	0	0	0	0
Existing Site Adjustment Volume [veh/h]	0	0	0	0	0	0	0	0	0	0	0	0
Other Volume [veh/h]	0	0	0	0	0	0	0	0	0	0	0	0
Total Hourly Volume [veh/h]	21	42	34	21	72	16	13	137	30	11	294	13
Peak Hour Factor	1.0000	1.0000	1.0000	1.0000	1.0000	1.0000	1.0000	1.0000	1.0000	1.0000	1.0000	1.0000
Other Adjustment Factor	1.0000	1.0000	1.0000	1.0000	1.0000	1.0000	1.0000	1.0000	1.0000	1.0000	1.0000	1.0000
Total 15-Minute Volume [veh/h]	5	11	9	5	18	4	3	34	8	3	74	3
Total Analysis Volume [veh/h]	21	42	34	21	72	16	13	137	30	11	294	13
Pedestrian Volume [ped/h]	0			0			0			0		

Intersection Settings

Lanes

Capacity per Entry Lane [veh/h]	700	687	750	766
Degree of Utilization, x	0.14	0.16	0.24	0.42

Movement, Approach, & Intersection Results

95th-Percentile Queue Length [veh]	0.48	0.56	0.94	2.06
95th-Percentile Queue Length [ft]	11.99	14.03	23.40	51.38
Approach Delay [s/veh]	8.97	9.23	9.31	11.00
Approach LOS	A	A	A	B
Intersection Delay [s/veh]	10.01			
Intersection LOS	B			

Intersection Level Of Service Report
Intersection 5: California Ave & Jackson St

Control Type:	All-way stop	Delay (sec / veh):	16.4
Analysis Method:	HCM 2010	Level Of Service:	C
Analysis Period:	15 minutes	Volume to Capacity (v/c):	0.610

Intersection Setup

Name	Jackson St			Jackson St			California Ave			California Ave		
Approach	Northbound			Southbound			Eastbound			Westbound		
Lane Configuration												
Turning Movement	Left	Thru	Right	Left	Thru	Right	Left	Thru	Right	Left	Thru	Right
Lane Width [ft]	12.00	12.00	12.00	12.00	12.00	12.00	12.00	12.00	12.00	12.00	12.00	12.00
No. of Lanes in Pocket	0	0	0	0	0	0	0	0	0	0	0	0
Pocket Length [ft]	100.00	100.00	100.00	100.00	100.00	100.00	100.00	100.00	100.00	100.00	100.00	100.00
Speed [mph]	30.00			30.00			30.00			30.00		
Grade [%]	0.00			0.00			0.00			0.00		
Crosswalk	Yes			Yes			Yes			Yes		

Volumes

Name	Jackson St			Jackson St			California Ave			California Ave		
Base Volume Input [veh/h]	21	145	25	48	289	16	10	164	28	47	261	47
Base Volume Adjustment Factor	1.0000	1.0000	1.0000	1.0000	1.0000	1.0000	1.0000	1.0000	1.0000	1.0000	1.0000	1.0000
Heavy Vehicles Percentage [%]	2.00	2.00	2.00	2.00	2.00	2.00	2.00	2.00	2.00	2.00	2.00	2.00
Growth Rate	1.01	1.01	1.01	1.01	1.01	1.01	1.01	1.01	1.01	1.01	1.01	1.01
In-Process Volume [veh/h]	0	0	0	0	0	0	0	0	0	0	0	0
Site-Generated Trips [veh/h]	0	0	0	0	0	0	0	0	0	0	0	0
Diverted Trips [veh/h]	0	0	0	0	0	0	0	0	0	0	0	0
Pass-by Trips [veh/h]	0	0	0	0	0	0	0	0	0	0	0	0
Existing Site Adjustment Volume [veh/h]	0	0	0	0	0	0	0	0	0	0	0	0
Other Volume [veh/h]	0	0	0	0	0	0	0	0	0	0	0	0
Total Hourly Volume [veh/h]	21	146	25	48	292	16	10	166	28	47	264	47
Peak Hour Factor	1.0000	1.0000	1.0000	1.0000	1.0000	1.0000	1.0000	1.0000	1.0000	1.0000	1.0000	1.0000
Other Adjustment Factor	1.0000	1.0000	1.0000	1.0000	1.0000	1.0000	1.0000	1.0000	1.0000	1.0000	1.0000	1.0000
Total 15-Minute Volume [veh/h]	5	37	6	12	73	4	3	42	7	12	66	12
Total Analysis Volume [veh/h]	21	146	25	48	292	16	10	166	28	47	264	47
Pedestrian Volume [ped/h]	0			0			0			0		

Intersection Settings

Lanes

Capacity per Entry Lane [veh/h]	555	584	560	589
Degree of Utilization, x	0.35	0.61	0.36	0.61

Movement, Approach, & Intersection Results

95th-Percentile Queue Length [veh]	1.54	4.10	1.66	4.07
95th-Percentile Queue Length [ft]	38.44	102.45	41.54	101.76
Approach Delay [s/veh]	12.90	18.32	13.09	18.11
Approach LOS	B	C	B	C
Intersection Delay [s/veh]	16.35			
Intersection LOS	C			

Intersection Level Of Service Report
Intersection 6: Wilson Ave & Brand Blvd

Control Type:	Signalized	Delay (sec / veh):	-
Analysis Method:	ICU 1	Level Of Service:	A
Analysis Period:	15 minutes	Volume to Capacity (v/c):	0.432

Intersection Setup

Name	Brand Blvd			Brand Blvd			Wilson Ave			Wilson Ave		
Approach	Northbound			Southbound			Eastbound			Westbound		
Lane Configuration												
Turning Movement	Left	Thru	Right	Left	Thru	Right	Left	Thru	Right	Left	Thru	Right
Lane Width [ft]	12.00	12.00	12.00	12.00	12.00	12.00	12.00	12.00	12.00	12.00	12.00	12.00
No. of Lanes in Pocket	0	0	0	0	0	0	0	0	0	0	0	0
Pocket Length [ft]	100.00	100.00	100.00	100.00	100.00	100.00	100.00	100.00	100.00	100.00	100.00	100.00
Speed [mph]	30.00			30.00			30.00			30.00		
Grade [%]	0.00			0.00			0.00			0.00		
Crosswalk	Yes			Yes			Yes			Yes		

Volumes

Name	Brand Blvd			Brand Blvd			Wilson Ave			Wilson Ave		
Base Volume Input [veh/h]	43	456	37	66	555	44	18	62	31	63	160	49
Base Volume Adjustment Factor	1.0000	1.0000	1.0000	1.0000	1.0000	1.0000	1.0000	1.0000	1.0000	1.0000	1.0000	1.0000
Heavy Vehicles Percentage [%]	2.00	2.00	2.00	2.00	2.00	2.00	2.00	2.00	2.00	2.00	2.00	2.00
Growth Rate	1.02	1.02	1.02	1.02	1.02	1.02	1.02	1.02	1.02	1.02	1.02	1.02
In-Process Volume [veh/h]	0	0	0	0	0	0	0	0	0	0	0	0
Site-Generated Trips [veh/h]	0	0	0	0	0	0	0	0	0	0	0	0
Diverted Trips [veh/h]	0	0	0	0	0	0	0	0	0	0	0	0
Pass-by Trips [veh/h]	0	0	0	0	0	0	0	0	0	0	0	0
Existing Site Adjustment Volume [veh/h]	0	0	0	0	0	0	0	0	0	0	0	0
Other Volume [veh/h]	0	0	0	0	0	0	0	0	0	0	0	0
Total Hourly Volume [veh/h]	44	465	38	67	566	45	18	63	32	64	163	50
Peak Hour Factor	1.0000	1.0000	1.0000	1.0000	1.0000	1.0000	1.0000	1.0000	1.0000	1.0000	1.0000	1.0000
Other Adjustment Factor	1.0000	1.0000	1.0000	1.0000	1.0000	1.0000	1.0000	1.0000	1.0000	1.0000	1.0000	1.0000
Total 15-Minute Volume [veh/h]	11	116	10	17	142	11	5	16	8	16	41	13
Total Analysis Volume [veh/h]	44	465	38	67	566	45	18	63	32	64	163	50
Pedestrian Volume [ped/h]	0			0			0			0		
Bicycle Volume [bicycles/h]	0			0			0			0		

Intersection Settings

Cycle Length [s]	100
Lost time [s]	10.00

Phasing & Timing

Control Type	Protecte	Permiss	Permiss	Protecte	Permiss	Permiss	Permiss	Permiss	Permiss	Permiss	Permiss	Permiss
Signal group	1	1	0	1	1	0	0	1	0	0	1	0
Auxiliary Signal Groups												
Lead / Lag	Lag	-	-	Lag	-	-	-	-	-	-	-	-

Movement, Approach, & Intersection Results

V/C, Movement V/C Ratio	0.03	0.16	0.16	0.04	0.19	0.19	0.01	0.04	0.02	0.04	0.10	0.03
Intersection LOS	A											
Intersection V/C	0.432											

Intersection Level Of Service Report
Intersection 7: Wilson Ave & Maryland Ave

Control Type:	Signalized	Delay (sec / veh):	-
Analysis Method:	ICU 1	Level Of Service:	A
Analysis Period:	15 minutes	Volume to Capacity (v/c):	0.361

Intersection Setup

Name	Maryland Ave			Maryland Ave			Wilson Ave			Wilson Ave		
Approach	Northbound			Southbound			Eastbound			Westbound		
Lane Configuration												
Turning Movement	Left	Thru	Right	Left	Thru	Right	Left	Thru	Right	Left	Thru	Right
Lane Width [ft]	12.00	12.00	12.00	12.00	12.00	12.00	12.00	12.00	12.00	12.00	12.00	12.00
No. of Lanes in Pocket	0	0	0	0	0	0	0	0	0	0	0	0
Pocket Length [ft]	100.00	100.00	100.00	100.00	100.00	100.00	100.00	100.00	100.00	100.00	100.00	100.00
Speed [mph]	30.00			30.00			30.00			30.00		
Grade [%]	0.00			0.00			0.00			0.00		
Crosswalk	Yes			Yes			Yes			Yes		

Volumes

Name	Maryland Ave			Maryland Ave			Wilson Ave			Wilson Ave		
Base Volume Input [veh/h]	10	1	13	36	28	35	16	93	52	42	259	61
Base Volume Adjustment Factor	1.0000	1.0000	1.0000	1.0000	1.0000	1.0000	1.0000	1.0000	1.0000	1.0000	1.0000	1.0000
Heavy Vehicles Percentage [%]	2.00	2.00	2.00	2.00	2.00	2.00	2.00	2.00	2.00	2.00	2.00	2.00
Growth Rate	1.02	1.02	1.02	1.02	1.02	1.02	1.02	1.02	1.02	1.02	1.02	1.02
In-Process Volume [veh/h]	0	0	0	0	0	0	0	0	0	0	0	0
Site-Generated Trips [veh/h]	0	0	0	0	0	0	0	0	0	0	0	0
Diverted Trips [veh/h]	0	0	0	0	0	0	0	0	0	0	0	0
Pass-by Trips [veh/h]	0	0	0	0	0	0	0	0	0	0	0	0
Existing Site Adjustment Volume [veh/h]	0	0	0	0	0	0	0	0	0	0	0	0
Other Volume [veh/h]	0	0	0	0	0	0	0	0	0	0	0	0
Total Hourly Volume [veh/h]	10	1	13	37	29	36	16	95	53	43	264	62
Peak Hour Factor	1.0000	1.0000	1.0000	1.0000	1.0000	1.0000	1.0000	1.0000	1.0000	1.0000	1.0000	1.0000
Other Adjustment Factor	1.0000	1.0000	1.0000	1.0000	1.0000	1.0000	1.0000	1.0000	1.0000	1.0000	1.0000	1.0000
Total 15-Minute Volume [veh/h]	3	0	3	9	7	9	4	24	13	11	66	16
Total Analysis Volume [veh/h]	10	1	13	37	29	36	16	95	53	43	264	62
Pedestrian Volume [ped/h]	0			0			0			0		
Bicycle Volume [bicycles/h]	0			0			0			0		

Intersection Settings

Cycle Length [s]	100
Lost time [s]	10.00

Phasing & Timing

Control Type	Permiss	Permiss	Permiss	Permiss	Permiss	Permiss	Permiss	Permiss	Permiss	Permiss	Permiss	Permiss
Signal group	0	1	0	0	1	0	0	1	0	0	1	0
Auxiliary Signal Groups												
Lead / Lag	-	-	-	-	-	-	-	-	-	-	-	-

Movement, Approach, & Intersection Results

V/C, Movement V/C Ratio	0.01	0.01	0.01	0.02	0.04	0.04	0.01	0.09	0.09	0.03	0.20	0.20
Intersection LOS	A											
Intersection V/C	0.361											

Intersection Level Of Service Report
Intersection 8: Wilson Ave & Louise St

Control Type:	Signalized	Delay (sec / veh):	-
Analysis Method:	ICU 1	Level Of Service:	A
Analysis Period:	15 minutes	Volume to Capacity (v/c):	0.506

Intersection Setup

Name	Louise St			Louise St			Wilson Ave			Wilson Ave		
Approach	Northbound			Southbound			Eastbound			Westbound		
Lane Configuration												
Turning Movement	Left	Thru	Right	Left	Thru	Right	Left	Thru	Right	Left	Thru	Right
Lane Width [ft]	12.00	12.00	12.00	12.00	12.00	12.00	12.00	12.00	12.00	12.00	12.00	12.00
No. of Lanes in Pocket	0	0	0	0	0	0	0	0	0	0	0	0
Pocket Length [ft]	100.00	100.00	100.00	100.00	100.00	100.00	100.00	100.00	100.00	100.00	100.00	100.00
Speed [mph]	30.00			30.00			30.00			30.00		
Grade [%]	0.00			0.00			0.00			0.00		
Crosswalk	Yes			Yes			Yes			Yes		

Volumes

Name	Louise St			Louise St			Wilson Ave			Wilson Ave		
Base Volume Input [veh/h]	27	90	56	57	172	30	6	158	34	33	305	46
Base Volume Adjustment Factor	1.0000	1.0000	1.0000	1.0000	1.0000	1.0000	1.0000	1.0000	1.0000	1.0000	1.0000	1.0000
Heavy Vehicles Percentage [%]	2.00	2.00	2.00	2.00	2.00	2.00	2.00	2.00	2.00	2.00	2.00	2.00
Growth Rate	1.01	1.01	1.01	1.01	1.01	1.01	1.01	1.01	1.01	1.01	1.01	1.01
In-Process Volume [veh/h]	0	0	0	0	0	0	0	0	0	0	0	0
Site-Generated Trips [veh/h]	0	0	0	0	0	0	0	0	0	0	0	0
Diverted Trips [veh/h]	0	0	0	0	0	0	0	0	0	0	0	0
Pass-by Trips [veh/h]	0	0	0	0	0	0	0	0	0	0	0	0
Existing Site Adjustment Volume [veh/h]	0	0	0	0	0	0	0	0	0	0	0	0
Other Volume [veh/h]	0	0	0	0	0	0	0	0	0	0	0	0
Total Hourly Volume [veh/h]	27	91	57	58	174	30	6	160	34	33	308	46
Peak Hour Factor	1.0000	1.0000	1.0000	1.0000	1.0000	1.0000	1.0000	1.0000	1.0000	1.0000	1.0000	1.0000
Other Adjustment Factor	1.0000	1.0000	1.0000	1.0000	1.0000	1.0000	1.0000	1.0000	1.0000	1.0000	1.0000	1.0000
Total 15-Minute Volume [veh/h]	7	23	14	15	44	8	2	40	9	8	77	12
Total Analysis Volume [veh/h]	27	91	57	58	174	30	6	160	34	33	308	46
Pedestrian Volume [ped/h]	0			0			0			0		
Bicycle Volume [bicycles/h]	0			0			0			0		

Intersection Settings

Cycle Length [s]	100
Lost time [s]	10.00

Phasing & Timing

Control Type	Permiss	Permiss	Permiss	Permiss	Permiss	Permiss	Permiss	Permiss	Permiss	Permiss	Permiss	Permiss
Signal group	0	1	0	0	1	0	0	1	0	0	1	0
Auxiliary Signal Groups												
Lead / Lag	-	-	-	-	-	-	-	-	-	-	-	-

Movement, Approach, & Intersection Results

V/C, Movement V/C Ratio	0.02	0.11	0.11	0.04	0.16	0.16	0.00	0.12	0.12	0.02	0.22	0.22
Intersection LOS	A											
Intersection V/C	0.506											

Intersection Level Of Service Report
Intersection 9: Wilson Ave & Kenwood St

Control Type:	Signalized	Delay (sec / veh):	-
Analysis Method:	ICU 1	Level Of Service:	A
Analysis Period:	15 minutes	Volume to Capacity (v/c):	0.413

Intersection Setup

Name	Kenwood St			Kenwood St			Wilson Ave			Wilson Ave		
Approach	Northbound			Southbound			Eastbound			Westbound		
Lane Configuration												
Turning Movement	Left	Thru	Right	Left	Thru	Right	Left	Thru	Right	Left	Thru	Right
Lane Width [ft]	12.00	12.00	12.00	12.00	12.00	12.00	12.00	12.00	12.00	12.00	12.00	12.00
No. of Lanes in Pocket	0	0	0	0	0	0	0	0	0	0	0	0
Pocket Length [ft]	100.00	100.00	100.00	100.00	100.00	100.00	100.00	100.00	100.00	100.00	100.00	100.00
Speed [mph]	30.00			30.00			30.00			30.00		
Grade [%]	0.00			0.00			0.00			0.00		
Crosswalk	Yes			Yes			Yes			Yes		

Volumes

Name	Kenwood St			Kenwood St			Wilson Ave			Wilson Ave		
Base Volume Input [veh/h]	14	60	16	21	55	17	13	209	52	26	317	29
Base Volume Adjustment Factor	1.0000	1.0000	1.0000	1.0000	1.0000	1.0000	1.0000	1.0000	1.0000	1.0000	1.0000	1.0000
Heavy Vehicles Percentage [%]	2.00	2.00	2.00	2.00	2.00	2.00	2.00	2.00	2.00	2.00	2.00	2.00
Growth Rate	1.01	1.01	1.01	1.01	1.01	1.01	1.01	1.01	1.01	1.01	1.01	1.01
In-Process Volume [veh/h]	0	0	0	0	0	0	0	0	0	0	0	0
Site-Generated Trips [veh/h]	0	0	0	0	0	0	0	0	0	0	0	0
Diverted Trips [veh/h]	0	0	0	0	0	0	0	0	0	0	0	0
Pass-by Trips [veh/h]	0	0	0	0	0	0	0	0	0	0	0	0
Existing Site Adjustment Volume [veh/h]	0	0	0	0	0	0	0	0	0	0	0	0
Other Volume [veh/h]	0	0	0	0	0	0	0	0	0	0	0	0
Total Hourly Volume [veh/h]	14	61	16	21	56	17	13	211	53	26	320	29
Peak Hour Factor	1.0000	1.0000	1.0000	1.0000	1.0000	1.0000	1.0000	1.0000	1.0000	1.0000	1.0000	1.0000
Other Adjustment Factor	1.0000	1.0000	1.0000	1.0000	1.0000	1.0000	1.0000	1.0000	1.0000	1.0000	1.0000	1.0000
Total 15-Minute Volume [veh/h]	4	15	4	5	14	4	3	53	13	7	80	7
Total Analysis Volume [veh/h]	14	61	16	21	56	17	13	211	53	26	320	29
Pedestrian Volume [ped/h]	0			0			0			0		
Bicycle Volume [bicycles/h]	0			0			0			0		

Intersection Settings

Cycle Length [s]	100
Lost time [s]	10.00

Phasing & Timing

Control Type	Permiss	Permiss	Permiss	Permiss	Permiss	Permiss	Permiss	Permiss	Permiss	Permiss	Permiss	Permiss
Signal group	0	1	0	0	1	0	0	1	0	0	1	0
Auxiliary Signal Groups												
Lead / Lag	-	-	-	-	-	-	-	-	-	-	-	-

Movement, Approach, & Intersection Results

V/C, Movement V/C Ratio	0.01	0.06	0.06	0.01	0.06	0.06	0.01	0.17	0.17	0.02	0.23	0.23
Intersection LOS	A											
Intersection V/C	0.413											

Intersection Level Of Service Report
Intersection 10: Wilson Ave & Jackson St

Control Type:	Signalized	Delay (sec / veh):	-
Analysis Method:	ICU 1	Level Of Service:	A
Analysis Period:	15 minutes	Volume to Capacity (v/c):	0.527

Intersection Setup

Name	Jackson St			Jackson St			Wilson Ave			Wilson Ave		
Approach	Northbound			Southbound			Eastbound			Westbound		
Lane Configuration												
Turning Movement	Left	Thru	Right	Left	Thru	Right	Left	Thru	Right	Left	Thru	Right
Lane Width [ft]	12.00	12.00	12.00	12.00	12.00	12.00	12.00	12.00	12.00	12.00	12.00	12.00
No. of Lanes in Pocket	0	0	0	0	0	0	0	0	0	0	0	0
Pocket Length [ft]	100.00	100.00	100.00	100.00	100.00	100.00	100.00	100.00	100.00	100.00	100.00	100.00
Speed [mph]	30.00			30.00			30.00			30.00		
Grade [%]	0.00			0.00			0.00			0.00		
Crosswalk	Yes			Yes			Yes			Yes		

Volumes

Name	Jackson St			Jackson St			Wilson Ave			Wilson Ave		
Base Volume Input [veh/h]	13	118	18	51	193	12	7	177	28	42	379	72
Base Volume Adjustment Factor	1.0000	1.0000	1.0000	1.0000	1.0000	1.0000	1.0000	1.0000	1.0000	1.0000	1.0000	1.0000
Heavy Vehicles Percentage [%]	2.00	2.00	2.00	2.00	2.00	2.00	2.00	2.00	2.00	2.00	2.00	2.00
Growth Rate	1.01	1.01	1.01	1.01	1.01	1.01	1.01	1.01	1.01	1.01	1.01	1.01
In-Process Volume [veh/h]	0	0	0	0	0	0	0	0	0	0	0	0
Site-Generated Trips [veh/h]	0	0	0	0	0	0	0	0	0	0	0	0
Diverted Trips [veh/h]	0	0	0	0	0	0	0	0	0	0	0	0
Pass-by Trips [veh/h]	0	0	0	0	0	0	0	0	0	0	0	0
Existing Site Adjustment Volume [veh/h]	0	0	0	0	0	0	0	0	0	0	0	0
Other Volume [veh/h]	0	0	0	0	0	0	0	0	0	0	0	0
Total Hourly Volume [veh/h]	13	119	18	52	195	12	7	179	28	42	383	73
Peak Hour Factor	1.0000	1.0000	1.0000	1.0000	1.0000	1.0000	1.0000	1.0000	1.0000	1.0000	1.0000	1.0000
Other Adjustment Factor	1.0000	1.0000	1.0000	1.0000	1.0000	1.0000	1.0000	1.0000	1.0000	1.0000	1.0000	1.0000
Total 15-Minute Volume [veh/h]	3	30	5	13	49	3	2	45	7	11	96	18
Total Analysis Volume [veh/h]	13	119	18	52	195	12	7	179	28	42	383	73
Pedestrian Volume [ped/h]	0			0			0			0		
Bicycle Volume [bicycles/h]	0			0			0			0		

Intersection Settings

Cycle Length [s]	100
Lost time [s]	10.00

Phasing & Timing

Control Type	Permiss	Permiss	Permiss	Permiss	Permiss	Permiss	Permiss	Permiss	Permiss	Permiss	Permiss	Permiss
Signal group	0	1	0	0	1	0	0	1	0	0	1	0
Auxiliary Signal Groups												
Lead / Lag	-	-	-	-	-	-	-	-	-	-	-	-

Movement, Approach, & Intersection Results

V/C, Movement V/C Ratio	0.01	0.09	0.09	0.03	0.13	0.13	0.00	0.13	0.13	0.03	0.29	0.29
Intersection LOS	A											
Intersection V/C	0.527											

Intersection Level Of Service Report
Intersection 11: Wilson Ave & Glendale Ave

Control Type:	Signalized	Delay (sec / veh):	-
Analysis Method:	ICU 1	Level Of Service:	C
Analysis Period:	15 minutes	Volume to Capacity (v/c):	0.719

Intersection Setup

Name							Wilson Ave			Wilson Ave		
Approach	Northbound			Southbound			Eastbound			Westbound		
Lane Configuration												
Turning Movement	Left	Thru	Right	Left	Thru	Right	Left	Thru	Right	Left	Thru	Right
Lane Width [ft]	12.00	12.00	12.00	12.00	12.00	12.00	12.00	12.00	12.00	12.00	12.00	12.00
No. of Lanes in Pocket	0	0	0	0	0	0	0	0	0	0	0	0
Pocket Length [ft]	100.00	100.00	100.00	100.00	100.00	100.00	100.00	100.00	100.00	100.00	100.00	100.00
Speed [mph]	30.00			30.00			30.00			30.00		
Grade [%]	0.00			0.00			0.00			0.00		
Crosswalk	Yes			Yes			Yes			Yes		

Volumes

Name							Wilson Ave			Wilson Ave		
Base Volume Input [veh/h]	73	494	17	59	743	150	55	105	44	106	417	63
Base Volume Adjustment Factor	1.0000	1.0000	1.0000	1.0000	1.0000	1.0000	1.0000	1.0000	1.0000	1.0000	1.0000	1.0000
Heavy Vehicles Percentage [%]	2.00	2.00	2.00	2.00	2.00	2.00	2.00	2.00	2.00	2.00	2.00	2.00
Growth Rate	1.01	1.01	1.01	1.01	1.01	1.01	1.01	1.01	1.01	1.01	1.01	1.01
In-Process Volume [veh/h]	0	0	0	0	0	0	0	0	0	0	0	0
Site-Generated Trips [veh/h]	0	0	0	0	0	0	0	0	0	0	0	0
Diverted Trips [veh/h]	0	0	0	0	0	0	0	0	0	0	0	0
Pass-by Trips [veh/h]	0	0	0	0	0	0	0	0	0	0	0	0
Existing Site Adjustment Volume [veh/h]	0	0	0	0	0	0	0	0	0	0	0	0
Other Volume [veh/h]	0	0	0	0	0	0	0	0	0	0	0	0
Total Hourly Volume [veh/h]	74	499	17	60	750	152	56	106	44	107	421	64
Peak Hour Factor	1.0000	1.0000	1.0000	1.0000	1.0000	1.0000	1.0000	1.0000	1.0000	1.0000	1.0000	1.0000
Other Adjustment Factor	1.0000	1.0000	1.0000	1.0000	1.0000	1.0000	1.0000	1.0000	1.0000	1.0000	1.0000	1.0000
Total 15-Minute Volume [veh/h]	19	125	4	15	188	38	14	27	11	27	105	16
Total Analysis Volume [veh/h]	74	499	17	60	750	152	56	106	44	107	421	64
Pedestrian Volume [ped/h]	0			0			0			0		
Bicycle Volume [bicycles/h]	0			0			0			0		

Intersection Settings

Cycle Length [s]	100
Lost time [s]	10.00

Phasing & Timing

Control Type	Protecte	Permiss	Permiss	Protecte	Permiss	Permiss	Protecte	Permiss	Permiss	Protecte	Permiss	Permiss
Signal group	1	1	0	1	1	0	1	1	0	1	1	0
Auxiliary Signal Groups												
Lead / Lag	Lag	-	-	Lag	-	-	Lag	-	-	Lag	-	-

Movement, Approach, & Intersection Results

V/C, Movement V/C Ratio	0.05	0.16	0.16	0.04	0.23	0.10	0.04	0.07	0.03	0.07	0.30	0.30
Intersection LOS	C											
Intersection V/C	0.719											

Intersection Level Of Service Report
Intersection 12: Broadway & Brand Blvd

Control Type:	Signalized	Delay (sec / veh):	-
Analysis Method:	ICU 1	Level Of Service:	A
Analysis Period:	15 minutes	Volume to Capacity (v/c):	0.440

Intersection Setup

Name	Brand Blvd			Brand Blvd			Broadway			Broadway		
Approach	Northbound			Southbound			Eastbound			Westbound		
Lane Configuration												
Turning Movement	Left	Thru	Right	Left	Thru	Right	Left	Thru	Right	Left	Thru	Right
Lane Width [ft]	12.00	12.00	12.00	12.00	12.00	12.00	12.00	12.00	12.00	12.00	12.00	12.00
No. of Lanes in Pocket	0	0	0	0	0	0	0	0	0	0	0	0
Pocket Length [ft]	100.00	100.00	100.00	100.00	100.00	100.00	100.00	100.00	100.00	100.00	100.00	100.00
Speed [mph]	30.00			30.00			30.00			30.00		
Grade [%]	0.00			0.00			0.00			0.00		
Crosswalk	Yes			Yes			Yes			Yes		

Volumes

Name	Brand Blvd			Brand Blvd			Broadway			Broadway		
Base Volume Input [veh/h]	64	368	45	88	396	62	29	263	51	90	373	90
Base Volume Adjustment Factor	1.0000	1.0000	1.0000	1.0000	1.0000	1.0000	1.0000	1.0000	1.0000	1.0000	1.0000	1.0000
Heavy Vehicles Percentage [%]	2.00	2.00	2.00	2.00	2.00	2.00	2.00	2.00	2.00	2.00	2.00	2.00
Growth Rate	1.02	1.02	1.02	1.02	1.02	1.02	1.02	1.02	1.02	1.02	1.02	1.02
In-Process Volume [veh/h]	0	0	0	0	0	0	0	0	0	0	0	0
Site-Generated Trips [veh/h]	0	0	0	0	0	0	0	0	0	0	0	0
Diverted Trips [veh/h]	0	0	0	0	0	0	0	0	0	0	0	0
Pass-by Trips [veh/h]	0	0	0	0	0	0	0	0	0	0	0	0
Existing Site Adjustment Volume [veh/h]	0	0	0	0	0	0	0	0	0	0	0	0
Other Volume [veh/h]	0	0	0	0	0	0	0	0	0	0	0	0
Total Hourly Volume [veh/h]	65	375	46	90	404	63	30	268	52	92	380	92
Peak Hour Factor	1.0000	1.0000	1.0000	1.0000	1.0000	1.0000	1.0000	1.0000	1.0000	1.0000	1.0000	1.0000
Other Adjustment Factor	1.0000	1.0000	1.0000	1.0000	1.0000	1.0000	1.0000	1.0000	1.0000	1.0000	1.0000	1.0000
Total 15-Minute Volume [veh/h]	16	94	12	23	101	16	8	67	13	23	95	23
Total Analysis Volume [veh/h]	65	375	46	90	404	63	30	268	52	92	380	92
Pedestrian Volume [ped/h]	0			0			0			0		
Bicycle Volume [bicycles/h]	0			0			0			0		

Intersection Settings

Cycle Length [s]	100
Lost time [s]	10.00

Phasing & Timing

Control Type	Protecte	Permiss	Permiss	Protecte	Permiss	Permiss	Protecte	Permiss	Permiss	Protecte	Permiss	Permiss
Signal group	1	1	0	1	1	0	1	1	0	1	1	0
Auxiliary Signal Groups												
Lead / Lag	Lag	-	-	Lag	-	-	Lag	-	-	Lag	-	-

Movement, Approach, & Intersection Results

V/C, Movement V/C Ratio	0.04	0.12	0.03	0.06	0.10	0.10	0.02	0.10	0.10	0.06	0.15	0.15
Intersection LOS	A											
Intersection V/C	0.440											

Intersection Level Of Service Report
Intersection 13: Broadway & Maryland Ave

Control Type:	Signalized	Delay (sec / veh):	-
Analysis Method:	ICU 1	Level Of Service:	A
Analysis Period:	15 minutes	Volume to Capacity (v/c):	0.334

Intersection Setup

Name	Maryland Ave			Maryland Ave			Broadway			Broadway		
Approach	Northbound			Southbound			Eastbound			Westbound		
Lane Configuration												
Turning Movement	Left	Thru	Right	Left	Thru	Right	Left	Thru	Right	Left	Thru	Right
Lane Width [ft]	12.00	12.00	12.00	12.00	12.00	12.00	12.00	12.00	12.00	12.00	12.00	12.00
No. of Lanes in Pocket	0	0	0	0	0	0	0	0	0	0	0	0
Pocket Length [ft]	100.00	100.00	100.00	100.00	100.00	100.00	100.00	100.00	100.00	100.00	100.00	100.00
Speed [mph]	30.00			30.00			30.00			30.00		
Grade [%]	0.00			0.00			0.00			0.00		
Crosswalk	Yes			Yes			Yes			Yes		

Volumes

Name	Maryland Ave			Maryland Ave			Broadway			Broadway		
Base Volume Input [veh/h]	20	9	20	9	2	9	28	301	20	34	559	43
Base Volume Adjustment Factor	1.0000	1.0000	1.0000	1.0000	1.0000	1.0000	1.0000	1.0000	1.0000	1.0000	1.0000	1.0000
Heavy Vehicles Percentage [%]	2.00	2.00	2.00	2.00	2.00	2.00	2.00	2.00	2.00	2.00	2.00	2.00
Growth Rate	1.02	1.02	1.02	1.02	1.02	1.02	1.02	1.02	1.02	1.02	1.02	1.02
In-Process Volume [veh/h]	0	0	0	0	0	0	0	0	0	0	0	0
Site-Generated Trips [veh/h]	0	0	0	0	0	0	0	0	0	0	0	0
Diverted Trips [veh/h]	0	0	0	0	0	0	0	0	0	0	0	0
Pass-by Trips [veh/h]	0	0	0	0	0	0	0	0	0	0	0	0
Existing Site Adjustment Volume [veh/h]	0	0	0	0	0	0	0	0	0	0	0	0
Other Volume [veh/h]	0	0	0	0	0	0	0	0	0	0	0	0
Total Hourly Volume [veh/h]	20	9	20	9	2	9	29	307	20	35	570	44
Peak Hour Factor	1.0000	1.0000	1.0000	1.0000	1.0000	1.0000	1.0000	1.0000	1.0000	1.0000	1.0000	1.0000
Other Adjustment Factor	1.0000	1.0000	1.0000	1.0000	1.0000	1.0000	1.0000	1.0000	1.0000	1.0000	1.0000	1.0000
Total 15-Minute Volume [veh/h]	5	2	5	2	1	2	7	77	5	9	143	11
Total Analysis Volume [veh/h]	20	9	20	9	2	9	29	307	20	35	570	44
Pedestrian Volume [ped/h]	0			0			0			0		
Bicycle Volume [bicycles/h]	0			0			0			0		

Intersection Settings

Cycle Length [s]	100
Lost time [s]	10.00

Phasing & Timing

Control Type	Permiss	Permiss	Permiss	Permiss	Permiss	Permiss	Permiss	Permiss	Permiss	Permiss	Permiss	Permiss
Signal group	0	1	0	0	1	0	0	1	0	0	1	0
Auxiliary Signal Groups												
Lead / Lag	-	-	-	-	-	-	-	-	-	-	-	-

Movement, Approach, & Intersection Results

V/C, Movement V/C Ratio	0.01	0.02	0.02	0.01	0.01	0.01	0.02	0.11	0.11	0.02	0.19	0.19
Intersection LOS	A											
Intersection V/C	0.334											

Intersection Level Of Service Report
Intersection 14: Broadway & Louise St

Control Type:	Signalized	Delay (sec / veh):	-
Analysis Method:	ICU 1	Level Of Service:	A
Analysis Period:	15 minutes	Volume to Capacity (v/c):	0.457

Intersection Setup

Name	Louise St			Louise St			Broadway			Broadway		
Approach	Northbound			Southbound			Eastbound			Westbound		
Lane Configuration												
Turning Movement	Left	Thru	Right	Left	Thru	Right	Left	Thru	Right	Left	Thru	Right
Lane Width [ft]	12.00	12.00	12.00	12.00	12.00	12.00	12.00	12.00	12.00	12.00	12.00	12.00
No. of Lanes in Pocket	0	0	0	0	0	0	0	0	0	0	0	0
Pocket Length [ft]	100.00	100.00	100.00	100.00	100.00	100.00	100.00	100.00	100.00	100.00	100.00	100.00
Speed [mph]	30.00			30.00			30.00			30.00		
Grade [%]	0.00			0.00			0.00			0.00		
Crosswalk	Yes			Yes			Yes			Yes		

Volumes

Name	Louise St			Louise St			Broadway			Broadway		
Base Volume Input [veh/h]	26	79	37	39	149	23	29	243	22	27	539	38
Base Volume Adjustment Factor	1.0000	1.0000	1.0000	1.0000	1.0000	1.0000	1.0000	1.0000	1.0000	1.0000	1.0000	1.0000
Heavy Vehicles Percentage [%]	2.00	2.00	2.00	2.00	2.00	2.00	2.00	2.00	2.00	2.00	2.00	2.00
Growth Rate	1.01	1.01	1.01	1.01	1.01	1.01	1.01	1.01	1.01	1.01	1.01	1.01
In-Process Volume [veh/h]	0	0	0	0	0	0	0	0	0	0	0	0
Site-Generated Trips [veh/h]	0	0	0	0	0	0	0	0	0	0	0	0
Diverted Trips [veh/h]	0	0	0	0	0	0	0	0	0	0	0	0
Pass-by Trips [veh/h]	0	0	0	0	0	0	0	0	0	0	0	0
Existing Site Adjustment Volume [veh/h]	0	0	0	0	0	0	0	0	0	0	0	0
Other Volume [veh/h]	0	0	0	0	0	0	0	0	0	0	0	0
Total Hourly Volume [veh/h]	26	80	37	39	150	23	29	245	22	27	544	38
Peak Hour Factor	1.0000	1.0000	1.0000	1.0000	1.0000	1.0000	1.0000	1.0000	1.0000	1.0000	1.0000	1.0000
Other Adjustment Factor	1.0000	1.0000	1.0000	1.0000	1.0000	1.0000	1.0000	1.0000	1.0000	1.0000	1.0000	1.0000
Total 15-Minute Volume [veh/h]	7	20	9	10	38	6	7	61	6	7	136	10
Total Analysis Volume [veh/h]	26	80	37	39	150	23	29	245	22	27	544	38
Pedestrian Volume [ped/h]	0			0			0			0		
Bicycle Volume [bicycles/h]	0			0			0			0		

Intersection Settings

Cycle Length [s]	100
Lost time [s]	10.00

Phasing & Timing

Control Type	Permiss	Permiss	Permiss	Permiss	Permiss	Permiss	Permiss	Permiss	Permiss	Permiss	Permiss	Permiss
Signal group	0	1	0	0	1	0	0	1	0	0	1	0
Auxiliary Signal Groups												
Lead / Lag	-	-	-	-	-	-	-	-	-	-	-	-

Movement, Approach, & Intersection Results

V/C, Movement V/C Ratio	0.02	0.09	0.09	0.02	0.13	0.13	0.02	0.08	0.08	0.02	0.19	0.19
Intersection LOS	A											
Intersection V/C	0.457											

Intersection Level Of Service Report
Intersection 15: Broadway and Kenwood St

Control Type:	Signalized	Delay (sec / veh):	-
Analysis Method:	ICU 1	Level Of Service:	A
Analysis Period:	15 minutes	Volume to Capacity (v/c):	0.373

Intersection Setup

Name	Kenwood St			Kenwood St			Broadway			Broadway		
Approach	Northbound			Southbound			Eastbound			Westbound		
Lane Configuration												
Turning Movement	Left	Thru	Right	Left	Thru	Right	Left	Thru	Right	Left	Thru	Right
Lane Width [ft]	12.00	12.00	12.00	12.00	12.00	12.00	12.00	12.00	12.00	12.00	12.00	12.00
No. of Lanes in Pocket	0	0	0	0	0	0	0	0	0	0	0	0
Pocket Length [ft]	100.00	100.00	100.00	100.00	100.00	100.00	100.00	100.00	100.00	100.00	100.00	100.00
Speed [mph]	30.00			30.00			30.00			30.00		
Grade [%]	0.00			0.00			0.00			0.00		
Crosswalk	Yes			Yes			Yes			Yes		

Volumes

Name	Kenwood St			Kenwood St			Broadway			Broadway		
Base Volume Input [veh/h]	10	33	21	7	42	18	10	250	10	22	645	25
Base Volume Adjustment Factor	1.0000	1.0000	1.0000	1.0000	1.0000	1.0000	1.0000	1.0000	1.0000	1.0000	1.0000	1.0000
Heavy Vehicles Percentage [%]	2.00	2.00	2.00	2.00	2.00	2.00	2.00	2.00	2.00	2.00	2.00	2.00
Growth Rate	1.01	1.01	1.01	1.01	1.01	1.01	1.01	1.01	1.01	1.01	1.01	1.01
In-Process Volume [veh/h]	0	0	0	0	0	0	0	0	0	0	0	0
Site-Generated Trips [veh/h]	0	0	0	0	0	0	0	0	0	0	0	0
Diverted Trips [veh/h]	0	0	0	0	0	0	0	0	0	0	0	0
Pass-by Trips [veh/h]	0	0	0	0	0	0	0	0	0	0	0	0
Existing Site Adjustment Volume [veh/h]	0	0	0	0	0	0	0	0	0	0	0	0
Other Volume [veh/h]	0	0	0	0	0	0	0	0	0	0	0	0
Total Hourly Volume [veh/h]	10	33	21	7	42	18	10	253	10	22	651	25
Peak Hour Factor	1.0000	1.0000	1.0000	1.0000	1.0000	1.0000	1.0000	1.0000	1.0000	1.0000	1.0000	1.0000
Other Adjustment Factor	1.0000	1.0000	1.0000	1.0000	1.0000	1.0000	1.0000	1.0000	1.0000	1.0000	1.0000	1.0000
Total 15-Minute Volume [veh/h]	3	8	5	2	11	5	3	63	3	6	163	6
Total Analysis Volume [veh/h]	10	33	21	7	42	18	10	253	10	22	651	25
Pedestrian Volume [ped/h]	0			0			0			0		
Bicycle Volume [bicycles/h]	0			0			0			0		

Intersection Settings

Cycle Length [s]	100
Lost time [s]	10.00

Phasing & Timing

Control Type	Permiss	Permiss	Permiss	Permiss	Permiss	Permiss	Permiss	Permiss	Permiss	Permiss	Permiss	Permiss
Signal group	0	1	0	0	1	0	0	1	0	0	1	0
Auxiliary Signal Groups												
Lead / Lag	-	-	-	-	-	-	-	-	-	-	-	-

Movement, Approach, & Intersection Results

V/C, Movement V/C Ratio	0.01	0.04	0.04	0.00	0.04	0.04	0.01	0.09	0.09	0.01	0.22	0.22
Intersection LOS	A											
Intersection V/C	0.373											

Intersection Level Of Service Report
Intersection 16: Broadway & Jackon St

Control Type:	Signalized	Delay (sec / veh):	-
Analysis Method:	ICU 1	Level Of Service:	A
Analysis Period:	15 minutes	Volume to Capacity (v/c):	0.417

Intersection Setup

Name	Jackson St			Jackson St			Broadway					
Approach	Northbound			Southbound			Eastbound			Westbound		
Lane Configuration												
Turning Movement	Left	Thru	Right	Left	Thru	Right	Left	Thru	Right	Left	Thru	Right
Lane Width [ft]	12.00	12.00	12.00	12.00	12.00	12.00	12.00	12.00	12.00	12.00	12.00	12.00
No. of Lanes in Pocket	0	0	0	0	0	0	0	0	0	0	0	0
Pocket Length [ft]	100.00	100.00	100.00	100.00	100.00	100.00	100.00	100.00	100.00	100.00	100.00	100.00
Speed [mph]	30.00			30.00			30.00			30.00		
Grade [%]	0.00			0.00			0.00			0.00		
Crosswalk	Yes			Yes			Yes			Yes		

Volumes

Name	Jackson St			Jackson St			Broadway					
Base Volume Input [veh/h]	22	101	25	42	154	30	18	211	11	18	482	34
Base Volume Adjustment Factor	1.0000	1.0000	1.0000	1.0000	1.0000	1.0000	1.0000	1.0000	1.0000	1.0000	1.0000	1.0000
Heavy Vehicles Percentage [%]	2.00	2.00	2.00	2.00	2.00	2.00	2.00	2.00	2.00	2.00	2.00	2.00
Growth Rate	1.01	1.01	1.01	1.01	1.01	1.01	1.01	1.01	1.01	1.01	1.01	1.01
In-Process Volume [veh/h]	0	0	0	0	0	0	0	0	0	0	0	0
Site-Generated Trips [veh/h]	0	0	0	0	0	0	0	0	0	0	0	0
Diverted Trips [veh/h]	0	0	0	0	0	0	0	0	0	0	0	0
Pass-by Trips [veh/h]	0	0	0	0	0	0	0	0	0	0	0	0
Existing Site Adjustment Volume [veh/h]	0	0	0	0	0	0	0	0	0	0	0	0
Other Volume [veh/h]	0	0	0	0	0	0	0	0	0	0	0	0
Total Hourly Volume [veh/h]	22	102	25	42	156	30	18	213	11	18	487	34
Peak Hour Factor	1.0000	1.0000	1.0000	1.0000	1.0000	1.0000	1.0000	1.0000	1.0000	1.0000	1.0000	1.0000
Other Adjustment Factor	1.0000	1.0000	1.0000	1.0000	1.0000	1.0000	1.0000	1.0000	1.0000	1.0000	1.0000	1.0000
Total 15-Minute Volume [veh/h]	6	26	6	11	39	8	5	53	3	5	122	9
Total Analysis Volume [veh/h]	22	102	25	42	156	30	18	213	11	18	487	34
Pedestrian Volume [ped/h]	0			0			0			0		
Bicycle Volume [bicycles/h]	0			0			0			0		

Intersection Settings

Cycle Length [s]	100
Lost time [s]	10.00

Phasing & Timing

Control Type	Permiss	Permiss	Permiss	Permiss	Permiss	Permiss	Permiss	Permiss	Permiss	Permiss	Permiss	Permiss
Signal group	0	1	0	0	1	0	0	1	0	0	1	0
Auxiliary Signal Groups												
Lead / Lag	-	-	-	-	-	-	-	-	-	-	-	-

Movement, Approach, & Intersection Results

V/C, Movement V/C Ratio	0.01	0.09	0.09	0.03	0.12	0.02	0.01	0.08	0.08	0.01	0.17	0.17
Intersection LOS	A											
Intersection V/C	0.417											

Intersection Level Of Service Report
Intersection 1: Brand Blvd & California Ave

Control Type:	Signalized	Delay (sec / veh):	-
Analysis Method:	ICU 1	Level Of Service:	A
Analysis Period:	15 minutes	Volume to Capacity (v/c):	0.543

Intersection Setup

Name	Brand Blvd			Brand Blvd			California Ave			Calfornia Ave		
Approach	Northbound			Southbound			Eastbound			Westbound		
Lane Configuration												
Turning Movement	Left	Thru	Right	Left	Thru	Right	Left	Thru	Right	Left	Thru	Right
Lane Width [ft]	12.00	12.00	12.00	12.00	12.00	12.00	12.00	12.00	12.00	12.00	12.00	12.00
No. of Lanes in Pocket	0	0	0	0	0	0	0	0	0	0	0	0
Pocket Length [ft]	100.00	100.00	100.00	100.00	100.00	100.00	100.00	100.00	100.00	100.00	100.00	100.00
Speed [mph]	30.00			30.00			30.00			30.00		
Grade [%]	0.00			0.00			0.00			0.00		
Crosswalk	Yes			Yes			Yes			Yes		

Volumes

Name	Brand Blvd			Brand Blvd			California Ave			Calfornia Ave		
Base Volume Input [veh/h]	49	450	38	34	613	112	27	138	43	28	168	52
Base Volume Adjustment Factor	1.0000	1.0000	1.0000	1.0000	1.0000	1.0000	1.0000	1.0000	1.0000	1.0000	1.0000	1.0000
Heavy Vehicles Percentage [%]	2.00	2.00	2.00	2.00	2.00	2.00	2.00	2.00	2.00	2.00	2.00	2.00
Growth Rate	1.02	1.02	1.02	1.02	1.02	1.02	1.02	1.02	1.02	1.02	1.02	1.02
In-Process Volume [veh/h]	0	0	0	0	0	0	0	0	0	0	0	0
Site-Generated Trips [veh/h]	0	0	0	-8	0	0	0	-1	0	0	1	7
Diverted Trips [veh/h]	0	0	0	0	0	0	0	0	0	0	0	0
Pass-by Trips [veh/h]	0	0	0	0	0	0	0	0	0	0	0	0
Existing Site Adjustment Volume [veh/h]	0	0	0	0	0	0	0	0	0	0	0	0
Other Volume [veh/h]	0	0	0	0	0	0	0	0	0	0	0	0
Total Hourly Volume [veh/h]	50	459	39	27	625	114	28	140	44	29	172	60
Peak Hour Factor	1.0000	1.0000	1.0000	1.0000	1.0000	1.0000	1.0000	1.0000	1.0000	1.0000	1.0000	1.0000
Other Adjustment Factor	1.0000	1.0000	1.0000	1.0000	1.0000	1.0000	1.0000	1.0000	1.0000	1.0000	1.0000	1.0000
Total 15-Minute Volume [veh/h]	13	115	10	7	156	29	7	35	11	7	43	15
Total Analysis Volume [veh/h]	50	459	39	27	625	114	28	140	44	29	172	60
Pedestrian Volume [ped/h]	0			0			0			0		
Bicycle Volume [bicycles/h]	0			0			0			0		

Intersection Settings

Cycle Length [s]	100
Lost time [s]	10.00

Phasing & Timing

Control Type	Protecte	Permiss	Permiss	Protecte	Permiss	Permiss	Permiss	Permiss	Permiss	Permiss	Permiss	Permiss
Signal group	1	1	0	1	1	0	0	1	0	0	1	0
Auxiliary Signal Groups												
Lead / Lag	Lag	-	-	Lag	-	-	-	-	-	-	-	-

Movement, Approach, & Intersection Results

V/C, Movement V/C Ratio	0.03	0.16	0.16	0.02	0.23	0.23	0.02	0.13	0.13	0.02	0.16	0.16
Intersection LOS	A											
Intersection V/C	0.543											

Intersection Level Of Service Report
Intersection 2: California Ave & Maryland Ave

Control Type:	Signalized	Delay (sec / veh):	-
Analysis Method:	ICU 1	Level Of Service:	A
Analysis Period:	15 minutes	Volume to Capacity (v/c):	0.368

Intersection Setup

Name	Maryland Ave			Maryland Ave			Calfornia Ave			California Ave		
Approach	Northbound			Southbound			Eastbound			Westbound		
Lane Configuration												
Turning Movement	Left	Thru	Right	Left	Thru	Right	Left	Thru	Right	Left	Thru	Right
Lane Width [ft]	12.00	12.00	12.00	12.00	12.00	12.00	12.00	12.00	12.00	12.00	12.00	12.00
No. of Lanes in Pocket	0	0	0	0	0	0	0	0	0	0	0	0
Pocket Length [ft]	100.00	100.00	100.00	100.00	100.00	100.00	100.00	100.00	100.00	100.00	100.00	100.00
Speed [mph]	30.00			30.00			30.00			30.00		
Grade [%]	0.00			0.00			0.00			0.00		
Crosswalk	Yes			Yes			Yes			Yes		

Volumes

Name	Maryland Ave			Maryland Ave			Calfornia Ave			California Ave		
Base Volume Input [veh/h]	12	79	21	10	41	3	12	220	71	31	146	19
Base Volume Adjustment Factor	1.0000	1.0000	1.0000	1.0000	1.0000	1.0000	1.0000	1.0000	1.0000	1.0000	1.0000	1.0000
Heavy Vehicles Percentage [%]	2.00	2.00	2.00	2.00	2.00	2.00	2.00	2.00	2.00	2.00	2.00	2.00
Growth Rate	1.02	1.02	1.02	1.02	1.02	1.02	1.02	1.02	1.02	1.02	1.02	1.02
In-Process Volume [veh/h]	0	0	0	0	0	0	0	0	0	0	0	0
Site-Generated Trips [veh/h]	0	0	0	0	0	0	0	-9	0	0	8	0
Diverted Trips [veh/h]	0	0	0	0	0	0	0	0	0	0	0	0
Pass-by Trips [veh/h]	0	0	0	0	0	0	0	0	0	0	0	0
Existing Site Adjustment Volume [veh/h]	0	0	0	0	0	0	0	0	0	0	0	0
Other Volume [veh/h]	0	0	0	0	0	0	0	0	0	0	0	0
Total Hourly Volume [veh/h]	12	81	21	10	42	3	12	215	72	32	157	19
Peak Hour Factor	1.0000	1.0000	1.0000	1.0000	1.0000	1.0000	1.0000	1.0000	1.0000	1.0000	1.0000	1.0000
Other Adjustment Factor	1.0000	1.0000	1.0000	1.0000	1.0000	1.0000	1.0000	1.0000	1.0000	1.0000	1.0000	1.0000
Total 15-Minute Volume [veh/h]	3	20	5	3	11	1	3	54	18	8	39	5
Total Analysis Volume [veh/h]	12	81	21	10	42	3	12	215	72	32	157	19
Pedestrian Volume [ped/h]	0			0			0			0		
Bicycle Volume [bicycles/h]	0			0			0			0		

Intersection Settings

Cycle Length [s]	100
Lost time [s]	10.00

Phasing & Timing

Control Type	Split	Split	Split	Split	Split	Split	Permiss	Permiss	Permiss	Permiss	Permiss	Permiss
Signal group	0	1	0	0	1	0	0	1	0	0	1	0
Auxiliary Signal Groups												
Lead / Lag	-	-	-	-	-	-	-	-	-	-	-	-

Movement, Approach, & Intersection Results

V/C, Movement V/C Ratio	0.01	0.07	0.07	0.01	0.03	0.03	0.01	0.14	0.05	0.02	0.13	0.13
Intersection LOS	A											
Intersection V/C	0.368											

Intersection Level Of Service Report
Intersection 3: California Ave & Louise St

Control Type:	All-way stop	Delay (sec / veh):	12.4
Analysis Method:	HCM 2010	Level Of Service:	B
Analysis Period:	15 minutes	Volume to Capacity (v/c):	0.487

Intersection Setup

Name	Louise St			Louise St			California Ave			California Ave		
Approach	Northbound			Southbound			Eastbound			Westbound		
Lane Configuration												
Turning Movement	Left	Thru	Right	Left	Thru	Right	Left	Thru	Right	Left	Thru	Right
Lane Width [ft]	12.00	12.00	12.00	12.00	12.00	12.00	12.00	12.00	12.00	12.00	12.00	12.00
No. of Lanes in Pocket	0	0	0	0	0	0	0	0	0	0	0	0
Pocket Length [ft]	100.00	100.00	100.00	100.00	100.00	100.00	100.00	100.00	100.00	100.00	100.00	100.00
Speed [mph]	30.00			30.00			30.00			30.00		
Grade [%]	0.00			0.00			0.00			0.00		
Crosswalk	Yes			Yes			Yes			Yes		

Volumes

Name	Louise St			Louise St			California Ave			California Ave		
Base Volume Input [veh/h]	31	111	13	38	215	36	18	130	14	23	255	32
Base Volume Adjustment Factor	1.0000	1.0000	1.0000	1.0000	1.0000	1.0000	1.0000	1.0000	1.0000	1.0000	1.0000	1.0000
Heavy Vehicles Percentage [%]	2.00	2.00	2.00	2.00	2.00	2.00	2.00	2.00	2.00	2.00	2.00	2.00
Growth Rate	1.01	1.01	1.01	1.01	1.01	1.01	1.01	1.01	1.01	1.01	1.01	1.01
In-Process Volume [veh/h]	0	0	0	0	0	0	0	0	0	0	0	0
Site-Generated Trips [veh/h]	0	0	0	0	0	0	0	-9	0	0	8	0
Diverted Trips [veh/h]	0	0	0	0	0	0	0	0	0	0	0	0
Pass-by Trips [veh/h]	0	0	0	0	0	0	0	0	0	0	0	0
Existing Site Adjustment Volume [veh/h]	0	0	0	0	0	0	0	0	0	0	0	0
Other Volume [veh/h]	0	0	0	0	0	0	0	0	0	0	0	0
Total Hourly Volume [veh/h]	31	112	13	38	217	36	18	122	14	23	266	32
Peak Hour Factor	1.0000	1.0000	1.0000	1.0000	1.0000	1.0000	1.0000	1.0000	1.0000	1.0000	1.0000	1.0000
Other Adjustment Factor	1.0000	1.0000	1.0000	1.0000	1.0000	1.0000	1.0000	1.0000	1.0000	1.0000	1.0000	1.0000
Total 15-Minute Volume [veh/h]	8	28	3	10	54	9	5	31	4	6	67	8
Total Analysis Volume [veh/h]	31	112	13	38	217	36	18	122	14	23	266	32
Pedestrian Volume [ped/h]	0			0			0			0		

Intersection Settings

Lanes

Capacity per Entry Lane [veh/h]	619	650	624	659
Degree of Utilization, x	0.25	0.45	0.25	0.49

Movement, Approach, & Intersection Results

95th-Percentile Queue Length [veh]	0.99	2.31	0.97	2.68
95th-Percentile Queue Length [ft]	24.85	57.72	24.20	66.96
Approach Delay [s/veh]	10.77	12.93	10.66	13.54
Approach LOS	B	B	B	B
Intersection Delay [s/veh]	12.40			
Intersection LOS	B			

Intersection Level Of Service Report
Intersection 4: California Ave & Kenwood St

Control Type:	All-way stop	Delay (sec / veh):	10.1
Analysis Method:	HCM 2010	Level Of Service:	B
Analysis Period:	15 minutes	Volume to Capacity (v/c):	0.425

Intersection Setup

Name	Kenwood St			Kenwood St			California Ave			California Ave		
Approach	Northbound			Southbound			Eastbound			Westbound		
Lane Configuration												
Turning Movement	Left	Thru	Right	Left	Thru	Right	Left	Thru	Right	Left	Thru	Right
Lane Width [ft]	12.00	12.00	12.00	12.00	12.00	12.00	12.00	12.00	12.00	12.00	12.00	12.00
No. of Lanes in Pocket	0	0	0	0	0	0	0	0	0	0	0	0
Pocket Length [ft]	100.00	100.00	100.00	100.00	100.00	100.00	100.00	100.00	100.00	100.00	100.00	100.00
Speed [mph]	30.00			30.00			30.00			30.00		
Grade [%]	0.00			0.00			0.00			0.00		
Crosswalk	Yes			Yes			Yes			Yes		

Volumes

Name	Kenwood St			Kenwood St			California Ave			California Ave		
Base Volume Input [veh/h]	21	42	34	21	71	16	13	136	30	11	291	13
Base Volume Adjustment Factor	1.0000	1.0000	1.0000	1.0000	1.0000	1.0000	1.0000	1.0000	1.0000	1.0000	1.0000	1.0000
Heavy Vehicles Percentage [%]	2.00	2.00	2.00	2.00	2.00	2.00	2.00	2.00	2.00	2.00	2.00	2.00
Growth Rate	1.01	1.01	1.01	1.01	1.01	1.01	1.01	1.01	1.01	1.01	1.01	1.01
In-Process Volume [veh/h]	0	0	0	0	0	0	0	0	0	0	0	0
Site-Generated Trips [veh/h]	0	0	0	0	0	0	0	-9	0	0	8	0
Diverted Trips [veh/h]	0	0	0	0	0	0	0	0	0	0	0	0
Pass-by Trips [veh/h]	0	0	0	0	0	0	0	0	0	0	0	0
Existing Site Adjustment Volume [veh/h]	0	0	0	0	0	0	0	0	0	0	0	0
Other Volume [veh/h]	0	0	0	0	0	0	0	0	0	0	0	0
Total Hourly Volume [veh/h]	21	42	34	21	72	16	13	128	30	11	302	13
Peak Hour Factor	1.0000	1.0000	1.0000	1.0000	1.0000	1.0000	1.0000	1.0000	1.0000	1.0000	1.0000	1.0000
Other Adjustment Factor	1.0000	1.0000	1.0000	1.0000	1.0000	1.0000	1.0000	1.0000	1.0000	1.0000	1.0000	1.0000
Total 15-Minute Volume [veh/h]	5	11	9	5	18	4	3	32	8	3	76	3
Total Analysis Volume [veh/h]	21	42	34	21	72	16	13	128	30	11	302	13
Pedestrian Volume [ped/h]	0			0			0			0		

Intersection Settings

Lanes

Capacity per Entry Lane [veh/h]	700	688	749	768
Degree of Utilization, x	0.14	0.16	0.23	0.42

Movement, Approach, & Intersection Results

95th-Percentile Queue Length [veh]	0.48	0.56	0.88	2.13
95th-Percentile Queue Length [ft]	11.99	14.02	21.93	53.31
Approach Delay [s/veh]	8.97	9.22	9.22	11.11
Approach LOS	A	A	A	B
Intersection Delay [s/veh]	10.06			
Intersection LOS	B			

Intersection Level Of Service Report
Intersection 5: California Ave & Jackson St

Control Type:	All-way stop	Delay (sec / veh):	16.2
Analysis Method:	HCM 2010	Level Of Service:	C
Analysis Period:	15 minutes	Volume to Capacity (v/c):	0.604

Intersection Setup

Name	Jackson St			Jackson St			California Ave			California Ave		
Approach	Northbound			Southbound			Eastbound			Westbound		
Lane Configuration												
Turning Movement	Left	Thru	Right	Left	Thru	Right	Left	Thru	Right	Left	Thru	Right
Lane Width [ft]	12.00	12.00	12.00	12.00	12.00	12.00	12.00	12.00	12.00	12.00	12.00	12.00
No. of Lanes in Pocket	0	0	0	0	0	0	0	0	0	0	0	0
Pocket Length [ft]	100.00	100.00	100.00	100.00	100.00	100.00	100.00	100.00	100.00	100.00	100.00	100.00
Speed [mph]	30.00			30.00			30.00			30.00		
Grade [%]	0.00			0.00			0.00			0.00		
Crosswalk	Yes			Yes			Yes			Yes		

Volumes

Name	Jackson St			Jackson St			California Ave			California Ave		
Base Volume Input [veh/h]	21	145	25	48	289	16	10	164	28	47	261	47
Base Volume Adjustment Factor	1.0000	1.0000	1.0000	1.0000	1.0000	1.0000	1.0000	1.0000	1.0000	1.0000	1.0000	1.0000
Heavy Vehicles Percentage [%]	2.00	2.00	2.00	2.00	2.00	2.00	2.00	2.00	2.00	2.00	2.00	2.00
Growth Rate	1.01	1.01	1.01	1.01	1.01	1.01	1.01	1.01	1.01	1.01	1.01	1.01
In-Process Volume [veh/h]	0	0	0	0	0	0	0	0	0	0	0	0
Site-Generated Trips [veh/h]	8	6	2	0	-8	0	0	0	-9	-2	0	0
Diverted Trips [veh/h]	0	0	0	0	0	0	0	0	0	0	0	0
Pass-by Trips [veh/h]	0	0	0	0	0	0	0	0	0	0	0	0
Existing Site Adjustment Volume [veh/h]	0	0	0	0	0	0	0	0	0	0	0	0
Other Volume [veh/h]	0	0	0	0	0	0	0	0	0	0	0	0
Total Hourly Volume [veh/h]	29	152	27	48	284	16	10	166	19	45	264	47
Peak Hour Factor	1.0000	1.0000	1.0000	1.0000	1.0000	1.0000	1.0000	1.0000	1.0000	1.0000	1.0000	1.0000
Other Adjustment Factor	1.0000	1.0000	1.0000	1.0000	1.0000	1.0000	1.0000	1.0000	1.0000	1.0000	1.0000	1.0000
Total 15-Minute Volume [veh/h]	7	38	7	12	71	4	3	42	5	11	66	12
Total Analysis Volume [veh/h]	29	152	27	48	284	16	10	166	19	45	264	47
Pedestrian Volume [ped/h]	0			0			0			0		

Intersection Settings

Lanes

Capacity per Entry Lane [veh/h]	559	584	555	589
Degree of Utilization, x	0.37	0.60	0.35	0.60

Movement, Approach, & Intersection Results

95th-Percentile Queue Length [veh]	1.71	3.92	1.57	4.03
95th-Percentile Queue Length [ft]	42.84	97.91	39.27	100.65
Approach Delay [s/veh]	13.22	17.88	12.96	18.00
Approach LOS	B	C	B	C
Intersection Delay [s/veh]	16.18			
Intersection LOS	C			

Intersection Level Of Service Report
Intersection 6: Wilson Ave & Brand Blvd

Control Type:	Signalized	Delay (sec / veh):	-
Analysis Method:	ICU 1	Level Of Service:	A
Analysis Period:	15 minutes	Volume to Capacity (v/c):	0.433

Intersection Setup

Name	Brand Blvd			Brand Blvd			Wilson Ave			Wilson Ave		
Approach	Northbound			Southbound			Eastbound			Westbound		
Lane Configuration												
Turning Movement	Left	Thru	Right	Left	Thru	Right	Left	Thru	Right	Left	Thru	Right
Lane Width [ft]	12.00	12.00	12.00	12.00	12.00	12.00	12.00	12.00	12.00	12.00	12.00	12.00
No. of Lanes in Pocket	0	0	0	0	0	0	0	0	0	0	0	0
Pocket Length [ft]	100.00	100.00	100.00	100.00	100.00	100.00	100.00	100.00	100.00	100.00	100.00	100.00
Speed [mph]	30.00			30.00			30.00			30.00		
Grade [%]	0.00			0.00			0.00			0.00		
Crosswalk	Yes			Yes			Yes			Yes		

Volumes

Name	Brand Blvd			Brand Blvd			Wilson Ave			Wilson Ave		
Base Volume Input [veh/h]	43	456	37	66	555	44	18	62	31	63	160	49
Base Volume Adjustment Factor	1.0000	1.0000	1.0000	1.0000	1.0000	1.0000	1.0000	1.0000	1.0000	1.0000	1.0000	1.0000
Heavy Vehicles Percentage [%]	2.00	2.00	2.00	2.00	2.00	2.00	2.00	2.00	2.00	2.00	2.00	2.00
Growth Rate	1.02	1.02	1.02	1.02	1.02	1.02	1.02	1.02	1.02	1.02	1.02	1.02
In-Process Volume [veh/h]	0	0	0	0	0	0	0	0	0	0	0	0
Site-Generated Trips [veh/h]	0	0	-6	0	0	0	0	-2	0	6	2	0
Diverted Trips [veh/h]	0	0	0	0	0	0	0	0	0	0	0	0
Pass-by Trips [veh/h]	0	0	0	0	0	0	0	0	0	0	0	0
Existing Site Adjustment Volume [veh/h]	0	0	0	0	0	0	0	0	0	0	0	0
Other Volume [veh/h]	0	0	0	0	0	0	0	0	0	0	0	0
Total Hourly Volume [veh/h]	44	465	32	67	566	45	18	61	32	70	165	50
Peak Hour Factor	1.0000	1.0000	1.0000	1.0000	1.0000	1.0000	1.0000	1.0000	1.0000	1.0000	1.0000	1.0000
Other Adjustment Factor	1.0000	1.0000	1.0000	1.0000	1.0000	1.0000	1.0000	1.0000	1.0000	1.0000	1.0000	1.0000
Total 15-Minute Volume [veh/h]	11	116	8	17	142	11	5	15	8	18	41	13
Total Analysis Volume [veh/h]	44	465	32	67	566	45	18	61	32	70	165	50
Pedestrian Volume [ped/h]	0			0			0			0		
Bicycle Volume [bicycles/h]	0			0			0			0		

Intersection Settings

Cycle Length [s]	100
Lost time [s]	10.00

Phasing & Timing

Control Type	Protecte	Permiss	Permiss	Protecte	Permiss	Permiss	Permiss	Permiss	Permiss	Permiss	Permiss	Permiss
Signal group	1	1	0	1	1	0	0	1	0	0	1	0
Auxiliary Signal Groups												
Lead / Lag	Lag	-	-	Lag	-	-	-	-	-	-	-	-

Movement, Approach, & Intersection Results

V/C, Movement V/C Ratio	0.03	0.16	0.16	0.04	0.19	0.19	0.01	0.04	0.02	0.04	0.10	0.03
Intersection LOS	A											
Intersection V/C	0.433											

Intersection Level Of Service Report
Intersection 7: Wilson Ave & Maryland Ave

Control Type:	Signalized	Delay (sec / veh):	-
Analysis Method:	ICU 1	Level Of Service:	A
Analysis Period:	15 minutes	Volume to Capacity (v/c):	0.366

Intersection Setup

Name	Maryland Ave			Maryland Ave			Wilson Ave			Wilson Ave		
Approach	Northbound			Southbound			Eastbound			Westbound		
Lane Configuration												
Turning Movement	Left	Thru	Right	Left	Thru	Right	Left	Thru	Right	Left	Thru	Right
Lane Width [ft]	12.00	12.00	12.00	12.00	12.00	12.00	12.00	12.00	12.00	12.00	12.00	12.00
No. of Lanes in Pocket	0	0	0	0	0	0	0	0	0	0	0	0
Pocket Length [ft]	100.00	100.00	100.00	100.00	100.00	100.00	100.00	100.00	100.00	100.00	100.00	100.00
Speed [mph]	30.00			30.00			30.00			30.00		
Grade [%]	0.00			0.00			0.00			0.00		
Crosswalk	Yes			Yes			Yes			Yes		

Volumes

Name	Maryland Ave			Maryland Ave			Wilson Ave			Wilson Ave		
Base Volume Input [veh/h]	10	1	13	36	28	35	16	93	52	42	259	61
Base Volume Adjustment Factor	1.0000	1.0000	1.0000	1.0000	1.0000	1.0000	1.0000	1.0000	1.0000	1.0000	1.0000	1.0000
Heavy Vehicles Percentage [%]	2.00	2.00	2.00	2.00	2.00	2.00	2.00	2.00	2.00	2.00	2.00	2.00
Growth Rate	1.02	1.02	1.02	1.02	1.02	1.02	1.02	1.02	1.02	1.02	1.02	1.02
In-Process Volume [veh/h]	0	0	0	0	0	0	0	0	0	0	0	0
Site-Generated Trips [veh/h]	0	0	0	0	0	0	0	-8	0	0	8	0
Diverted Trips [veh/h]	0	0	0	0	0	0	0	0	0	0	0	0
Pass-by Trips [veh/h]	0	0	0	0	0	0	0	0	0	0	0	0
Existing Site Adjustment Volume [veh/h]	0	0	0	0	0	0	0	0	0	0	0	0
Other Volume [veh/h]	0	0	0	0	0	0	0	0	0	0	0	0
Total Hourly Volume [veh/h]	10	1	13	37	29	36	16	87	53	43	272	62
Peak Hour Factor	1.0000	1.0000	1.0000	1.0000	1.0000	1.0000	1.0000	1.0000	1.0000	1.0000	1.0000	1.0000
Other Adjustment Factor	1.0000	1.0000	1.0000	1.0000	1.0000	1.0000	1.0000	1.0000	1.0000	1.0000	1.0000	1.0000
Total 15-Minute Volume [veh/h]	3	0	3	9	7	9	4	22	13	11	68	16
Total Analysis Volume [veh/h]	10	1	13	37	29	36	16	87	53	43	272	62
Pedestrian Volume [ped/h]	0			0			0			0		
Bicycle Volume [bicycles/h]	0			0			0			0		

Intersection Settings

Cycle Length [s]	100
Lost time [s]	10.00

Phasing & Timing

Control Type	Permiss	Permiss	Permiss	Permiss	Permiss	Permiss	Permiss	Permiss	Permiss	Permiss	Permiss	Permiss
Signal group	0	1	0	0	1	0	0	1	0	0	1	0
Auxiliary Signal Groups												
Lead / Lag	-	-	-	-	-	-	-	-	-	-	-	-

Movement, Approach, & Intersection Results

V/C, Movement V/C Ratio	0.01	0.01	0.01	0.02	0.04	0.04	0.01	0.09	0.09	0.03	0.21	0.21
Intersection LOS	A											
Intersection V/C	0.366											

Intersection Level Of Service Report
Intersection 8: Wilson Ave & Louise St

Control Type:	Signalized	Delay (sec / veh):	-
Analysis Method:	ICU 1	Level Of Service:	A
Analysis Period:	15 minutes	Volume to Capacity (v/c):	0.511

Intersection Setup

Name	Louise St			Louise St			Wilson Ave			Wilson Ave		
Approach	Northbound			Southbound			Eastbound			Westbound		
Lane Configuration												
Turning Movement	Left	Thru	Right	Left	Thru	Right	Left	Thru	Right	Left	Thru	Right
Lane Width [ft]	12.00	12.00	12.00	12.00	12.00	12.00	12.00	12.00	12.00	12.00	12.00	12.00
No. of Lanes in Pocket	0	0	0	0	0	0	0	0	0	0	0	0
Pocket Length [ft]	100.00	100.00	100.00	100.00	100.00	100.00	100.00	100.00	100.00	100.00	100.00	100.00
Speed [mph]	30.00			30.00			30.00			30.00		
Grade [%]	0.00			0.00			0.00			0.00		
Crosswalk	Yes			Yes			Yes			Yes		

Volumes

Name	Louise St			Louise St			Wilson Ave			Wilson Ave		
Base Volume Input [veh/h]	27	90	56	57	172	30	6	158	34	33	305	46
Base Volume Adjustment Factor	1.0000	1.0000	1.0000	1.0000	1.0000	1.0000	1.0000	1.0000	1.0000	1.0000	1.0000	1.0000
Heavy Vehicles Percentage [%]	2.00	2.00	2.00	2.00	2.00	2.00	2.00	2.00	2.00	2.00	2.00	2.00
Growth Rate	1.01	1.01	1.01	1.01	1.01	1.01	1.01	1.01	1.01	1.01	1.01	1.01
In-Process Volume [veh/h]	0	0	0	0	0	0	0	0	0	0	0	0
Site-Generated Trips [veh/h]	0	0	0	0	0	0	0	-8	0	0	8	0
Diverted Trips [veh/h]	0	0	0	0	0	0	0	0	0	0	0	0
Pass-by Trips [veh/h]	0	0	0	0	0	0	0	0	0	0	0	0
Existing Site Adjustment Volume [veh/h]	0	0	0	0	0	0	0	0	0	0	0	0
Other Volume [veh/h]	0	0	0	0	0	0	0	0	0	0	0	0
Total Hourly Volume [veh/h]	27	91	57	58	174	30	6	152	34	33	316	46
Peak Hour Factor	1.0000	1.0000	1.0000	1.0000	1.0000	1.0000	1.0000	1.0000	1.0000	1.0000	1.0000	1.0000
Other Adjustment Factor	1.0000	1.0000	1.0000	1.0000	1.0000	1.0000	1.0000	1.0000	1.0000	1.0000	1.0000	1.0000
Total 15-Minute Volume [veh/h]	7	23	14	15	44	8	2	38	9	8	79	12
Total Analysis Volume [veh/h]	27	91	57	58	174	30	6	152	34	33	316	46
Pedestrian Volume [ped/h]	0			0			0			0		
Bicycle Volume [bicycles/h]	0			0			0			0		

Intersection Settings

Cycle Length [s]	100
Lost time [s]	10.00

Phasing & Timing

Control Type	Permiss	Permiss	Permiss	Permiss	Permiss	Permiss	Permiss	Permiss	Permiss	Permiss	Permiss	Permiss
Signal group	0	1	0	0	1	0	0	1	0	0	1	0
Auxiliary Signal Groups												
Lead / Lag	-	-	-	-	-	-	-	-	-	-	-	-

Movement, Approach, & Intersection Results

V/C, Movement V/C Ratio	0.02	0.11	0.11	0.04	0.16	0.16	0.00	0.12	0.12	0.02	0.23	0.23
Intersection LOS	A											
Intersection V/C	0.511											

Intersection Level Of Service Report
Intersection 9: Wilson Ave & Kenwood St

Control Type:	Signalized	Delay (sec / veh):	-
Analysis Method:	ICU 1	Level Of Service:	A
Analysis Period:	15 minutes	Volume to Capacity (v/c):	0.418

Intersection Setup

Name	Kenwood St			Kenwood St			Wilson Ave			Wilson Ave		
Approach	Northbound			Southbound			Eastbound			Westbound		
Lane Configuration												
Turning Movement	Left	Thru	Right	Left	Thru	Right	Left	Thru	Right	Left	Thru	Right
Lane Width [ft]	12.00	12.00	12.00	12.00	12.00	12.00	12.00	12.00	12.00	12.00	12.00	12.00
No. of Lanes in Pocket	0	0	0	0	0	0	0	0	0	0	0	0
Pocket Length [ft]	100.00	100.00	100.00	100.00	100.00	100.00	100.00	100.00	100.00	100.00	100.00	100.00
Speed [mph]	30.00			30.00			30.00			30.00		
Grade [%]	0.00			0.00			0.00			0.00		
Crosswalk	Yes			Yes			Yes			Yes		

Volumes

Name	Kenwood St			Kenwood St			Wilson Ave			Wilson Ave		
Base Volume Input [veh/h]	14	60	16	21	55	17	13	209	52	26	317	29
Base Volume Adjustment Factor	1.0000	1.0000	1.0000	1.0000	1.0000	1.0000	1.0000	1.0000	1.0000	1.0000	1.0000	1.0000
Heavy Vehicles Percentage [%]	2.00	2.00	2.00	2.00	2.00	2.00	2.00	2.00	2.00	2.00	2.00	2.00
Growth Rate	1.01	1.01	1.01	1.01	1.01	1.01	1.01	1.01	1.01	1.01	1.01	1.01
In-Process Volume [veh/h]	0	0	0	0	0	0	0	0	0	0	0	0
Site-Generated Trips [veh/h]	0	0	0	0	0	0	0	-8	0	0	8	0
Diverted Trips [veh/h]	0	0	0	0	0	0	0	0	0	0	0	0
Pass-by Trips [veh/h]	0	0	0	0	0	0	0	0	0	0	0	0
Existing Site Adjustment Volume [veh/h]	0	0	0	0	0	0	0	0	0	0	0	0
Other Volume [veh/h]	0	0	0	0	0	0	0	0	0	0	0	0
Total Hourly Volume [veh/h]	14	61	16	21	56	17	13	203	53	26	328	29
Peak Hour Factor	1.0000	1.0000	1.0000	1.0000	1.0000	1.0000	1.0000	1.0000	1.0000	1.0000	1.0000	1.0000
Other Adjustment Factor	1.0000	1.0000	1.0000	1.0000	1.0000	1.0000	1.0000	1.0000	1.0000	1.0000	1.0000	1.0000
Total 15-Minute Volume [veh/h]	4	15	4	5	14	4	3	51	13	7	82	7
Total Analysis Volume [veh/h]	14	61	16	21	56	17	13	203	53	26	328	29
Pedestrian Volume [ped/h]	0			0			0			0		
Bicycle Volume [bicycles/h]	0			0			0			0		

Intersection Settings

Cycle Length [s]	100
Lost time [s]	10.00

Phasing & Timing

Control Type	Permiss	Permiss	Permiss	Permiss	Permiss	Permiss	Permiss	Permiss	Permiss	Permiss	Permiss	Permiss
Signal group	0	1	0	0	1	0	0	1	0	0	1	0
Auxiliary Signal Groups												
Lead / Lag	-	-	-	-	-	-	-	-	-	-	-	-

Movement, Approach, & Intersection Results

V/C, Movement V/C Ratio	0.01	0.06	0.06	0.01	0.06	0.06	0.01	0.17	0.17	0.02	0.24	0.24
Intersection LOS	A											
Intersection V/C	0.418											

Intersection Level Of Service Report
Intersection 10: Wilson Ave & Jackson St

Control Type:	Signalized	Delay (sec / veh):	-
Analysis Method:	ICU 1	Level Of Service:	A
Analysis Period:	15 minutes	Volume to Capacity (v/c):	0.528

Intersection Setup

Name	Jackson St			Jackson St			Wilson Ave			Wilson Ave		
Approach	Northbound			Southbound			Eastbound			Westbound		
Lane Configuration												
Turning Movement	Left	Thru	Right	Left	Thru	Right	Left	Thru	Right	Left	Thru	Right
Lane Width [ft]	12.00	12.00	12.00	12.00	12.00	12.00	12.00	12.00	12.00	12.00	12.00	12.00
No. of Lanes in Pocket	0	0	0	0	0	0	0	0	0	0	0	0
Pocket Length [ft]	100.00	100.00	100.00	100.00	100.00	100.00	100.00	100.00	100.00	100.00	100.00	100.00
Speed [mph]	30.00			30.00			30.00			30.00		
Grade [%]	0.00			0.00			0.00			0.00		
Crosswalk	Yes			Yes			Yes			Yes		

Volumes

Name	Jackson St			Jackson St			Wilson Ave			Wilson Ave		
Base Volume Input [veh/h]	13	118	18	51	193	12	7	177	28	42	379	72
Base Volume Adjustment Factor	1.0000	1.0000	1.0000	1.0000	1.0000	1.0000	1.0000	1.0000	1.0000	1.0000	1.0000	1.0000
Heavy Vehicles Percentage [%]	2.00	2.00	2.00	2.00	2.00	2.00	2.00	2.00	2.00	2.00	2.00	2.00
Growth Rate	1.01	1.01	1.01	1.01	1.01	1.01	1.01	1.01	1.01	1.01	1.01	1.01
In-Process Volume [veh/h]	0	0	0	0	0	0	0	0	0	0	0	0
Site-Generated Trips [veh/h]	0	-6	0	5	6	8	-8	0	0	0	0	-6
Diverted Trips [veh/h]	0	0	0	0	0	0	0	0	0	0	0	0
Pass-by Trips [veh/h]	0	0	0	0	0	0	0	0	0	0	0	0
Existing Site Adjustment Volume [veh/h]	0	0	0	0	0	0	0	0	0	0	0	0
Other Volume [veh/h]	0	0	0	0	0	0	0	0	0	0	0	0
Total Hourly Volume [veh/h]	13	113	18	57	201	20	0	179	28	42	383	67
Peak Hour Factor	1.0000	1.0000	1.0000	1.0000	1.0000	1.0000	1.0000	1.0000	1.0000	1.0000	1.0000	1.0000
Other Adjustment Factor	1.0000	1.0000	1.0000	1.0000	1.0000	1.0000	1.0000	1.0000	1.0000	1.0000	1.0000	1.0000
Total 15-Minute Volume [veh/h]	3	28	5	14	50	5	0	45	7	11	96	17
Total Analysis Volume [veh/h]	13	113	18	57	201	20	0	179	28	42	383	67
Pedestrian Volume [ped/h]	0			0			0			0		
Bicycle Volume [bicycles/h]	0			0			0			0		

Intersection Settings

Cycle Length [s]	100
Lost time [s]	10.00

Phasing & Timing

Control Type	Permiss	Permiss	Permiss	Permiss	Permiss	Permiss	Permiss	Permiss	Permiss	Permiss	Permiss	Permiss
Signal group	0	1	0	0	1	0	0	1	0	0	1	0
Auxiliary Signal Groups												
Lead / Lag	-	-	-	-	-	-	-	-	-	-	-	-

Movement, Approach, & Intersection Results

V/C, Movement V/C Ratio	0.01	0.08	0.08	0.04	0.14	0.14	0.00	0.13	0.13	0.03	0.28	0.28
Intersection LOS	A											
Intersection V/C	0.528											

Intersection Level Of Service Report
Intersection 11: Wilson Ave & Glendale Ave

Control Type:	Signalized	Delay (sec / veh):	-
Analysis Method:	ICU 1	Level Of Service:	C
Analysis Period:	15 minutes	Volume to Capacity (v/c):	0.716

Intersection Setup

Name							Wilson Ave			Wilson Ave		
Approach	Northbound			Southbound			Eastbound			Westbound		
Lane Configuration												
Turning Movement	Left	Thru	Right	Left	Thru	Right	Left	Thru	Right	Left	Thru	Right
Lane Width [ft]	12.00	12.00	12.00	12.00	12.00	12.00	12.00	12.00	12.00	12.00	12.00	12.00
No. of Lanes in Pocket	0	0	0	0	0	0	0	0	0	0	0	0
Pocket Length [ft]	100.00	100.00	100.00	100.00	100.00	100.00	100.00	100.00	100.00	100.00	100.00	100.00
Speed [mph]	30.00			30.00			30.00			30.00		
Grade [%]	0.00			0.00			0.00			0.00		
Crosswalk	Yes			Yes			Yes			Yes		

Volumes

Name							Wilson Ave			Wilson Ave		
Base Volume Input [veh/h]	73	494	17	59	743	150	55	105	44	106	417	63
Base Volume Adjustment Factor	1.0000	1.0000	1.0000	1.0000	1.0000	1.0000	1.0000	1.0000	1.0000	1.0000	1.0000	1.0000
Heavy Vehicles Percentage [%]	2.00	2.00	2.00	2.00	2.00	2.00	2.00	2.00	2.00	2.00	2.00	2.00
Growth Rate	1.01	1.01	1.01	1.01	1.01	1.01	1.01	1.01	1.01	1.01	1.01	1.01
In-Process Volume [veh/h]	0	0	0	0	0	0	0	0	0	0	0	0
Site-Generated Trips [veh/h]	0	0	0	0	0	-1	1	4	0	0	-5	0
Diverted Trips [veh/h]	0	0	0	0	0	0	0	0	0	0	0	0
Pass-by Trips [veh/h]	0	0	0	0	0	0	0	0	0	0	0	0
Existing Site Adjustment Volume [veh/h]	0	0	0	0	0	0	0	0	0	0	0	0
Other Volume [veh/h]	0	0	0	0	0	0	0	0	0	0	0	0
Total Hourly Volume [veh/h]	74	499	17	60	750	151	57	110	44	107	416	64
Peak Hour Factor	1.0000	1.0000	1.0000	1.0000	1.0000	1.0000	1.0000	1.0000	1.0000	1.0000	1.0000	1.0000
Other Adjustment Factor	1.0000	1.0000	1.0000	1.0000	1.0000	1.0000	1.0000	1.0000	1.0000	1.0000	1.0000	1.0000
Total 15-Minute Volume [veh/h]	19	125	4	15	188	38	14	28	11	27	104	16
Total Analysis Volume [veh/h]	74	499	17	60	750	151	57	110	44	107	416	64
Pedestrian Volume [ped/h]	0			0			0			0		
Bicycle Volume [bicycles/h]	0			0			0			0		

Intersection Settings

Cycle Length [s]	100
Lost time [s]	10.00

Phasing & Timing

Control Type	Protecte	Permiss	Permiss	Protecte	Permiss	Permiss	Protecte	Permiss	Permiss	Protecte	Permiss	Permiss
Signal group	1	1	0	1	1	0	1	1	0	1	1	0
Auxiliary Signal Groups												
Lead / Lag	Lag	-	-	Lag	-	-	Lag	-	-	Lag	-	-

Movement, Approach, & Intersection Results

V/C, Movement V/C Ratio	0.05	0.16	0.16	0.04	0.23	0.09	0.04	0.07	0.03	0.07	0.30	0.30
Intersection LOS	C											
Intersection V/C	0.716											

Intersection Level Of Service Report
Intersection 12: Broadway & Brand Blvd

Control Type:	Signalized	Delay (sec / veh):	-
Analysis Method:	ICU 1	Level Of Service:	A
Analysis Period:	15 minutes	Volume to Capacity (v/c):	0.439

Intersection Setup

Name	Brand Blvd			Brand Blvd			Broadway			Broadway		
Approach	Northbound			Southbound			Eastbound			Westbound		
Lane Configuration												
Turning Movement	Left	Thru	Right	Left	Thru	Right	Left	Thru	Right	Left	Thru	Right
Lane Width [ft]	12.00	12.00	12.00	12.00	12.00	12.00	12.00	12.00	12.00	12.00	12.00	12.00
No. of Lanes in Pocket	0	0	0	0	0	0	0	0	0	0	0	0
Pocket Length [ft]	100.00	100.00	100.00	100.00	100.00	100.00	100.00	100.00	100.00	100.00	100.00	100.00
Speed [mph]	30.00			30.00			30.00			30.00		
Grade [%]	0.00			0.00			0.00			0.00		
Crosswalk	Yes			Yes			Yes			Yes		

Volumes

Name	Brand Blvd			Brand Blvd			Broadway			Broadway		
Base Volume Input [veh/h]	64	368	45	88	396	62	29	263	51	90	373	90
Base Volume Adjustment Factor	1.0000	1.0000	1.0000	1.0000	1.0000	1.0000	1.0000	1.0000	1.0000	1.0000	1.0000	1.0000
Heavy Vehicles Percentage [%]	2.00	2.00	2.00	2.00	2.00	2.00	2.00	2.00	2.00	2.00	2.00	2.00
Growth Rate	1.02	1.02	1.02	1.02	1.02	1.02	1.02	1.02	1.02	1.02	1.02	1.02
In-Process Volume [veh/h]	0	0	0	0	0	0	0	0	0	0	0	0
Site-Generated Trips [veh/h]	0	-6	0	0	6	0	0	-3	0	0	3	0
Diverted Trips [veh/h]	0	0	0	0	0	0	0	0	0	0	0	0
Pass-by Trips [veh/h]	0	0	0	0	0	0	0	0	0	0	0	0
Existing Site Adjustment Volume [veh/h]	0	0	0	0	0	0	0	0	0	0	0	0
Other Volume [veh/h]	0	0	0	0	0	0	0	0	0	0	0	0
Total Hourly Volume [veh/h]	65	369	46	90	410	63	30	265	52	92	383	92
Peak Hour Factor	1.0000	1.0000	1.0000	1.0000	1.0000	1.0000	1.0000	1.0000	1.0000	1.0000	1.0000	1.0000
Other Adjustment Factor	1.0000	1.0000	1.0000	1.0000	1.0000	1.0000	1.0000	1.0000	1.0000	1.0000	1.0000	1.0000
Total 15-Minute Volume [veh/h]	16	92	12	23	103	16	8	66	13	23	96	23
Total Analysis Volume [veh/h]	65	369	46	90	410	63	30	265	52	92	383	92
Pedestrian Volume [ped/h]	0			0			0			0		
Bicycle Volume [bicycles/h]	0			0			0			0		

Intersection Settings

Cycle Length [s]	100
Lost time [s]	10.00

Phasing & Timing

Control Type	Protecte	Permiss	Permiss	Protecte	Permiss	Permiss	Protecte	Permiss	Permiss	Protecte	Permiss	Permiss
Signal group	1	1	0	1	1	0	1	1	0	1	1	0
Auxiliary Signal Groups												
Lead / Lag	Lag	-	-	Lag	-	-	Lag	-	-	Lag	-	-

Movement, Approach, & Intersection Results

V/C, Movement V/C Ratio	0.04	0.12	0.03	0.06	0.10	0.10	0.02	0.10	0.10	0.06	0.15	0.15
Intersection LOS	A											
Intersection V/C	0.439											

Intersection Level Of Service Report
Intersection 13: Broadway & Maryland Ave

Control Type:	Signalized	Delay (sec / veh):	-
Analysis Method:	ICU 1	Level Of Service:	A
Analysis Period:	15 minutes	Volume to Capacity (v/c):	0.335

Intersection Setup

Name	Maryland Ave			Maryland Ave			Broadway			Broadway		
Approach	Northbound			Southbound			Eastbound			Westbound		
Lane Configuration												
Turning Movement	Left	Thru	Right	Left	Thru	Right	Left	Thru	Right	Left	Thru	Right
Lane Width [ft]	12.00	12.00	12.00	12.00	12.00	12.00	12.00	12.00	12.00	12.00	12.00	12.00
No. of Lanes in Pocket	0	0	0	0	0	0	0	0	0	0	0	0
Pocket Length [ft]	100.00	100.00	100.00	100.00	100.00	100.00	100.00	100.00	100.00	100.00	100.00	100.00
Speed [mph]	30.00			30.00			30.00			30.00		
Grade [%]	0.00			0.00			0.00			0.00		
Crosswalk	Yes			Yes			Yes			Yes		

Volumes

Name	Maryland Ave			Maryland Ave			Broadway			Broadway		
Base Volume Input [veh/h]	20	9	20	9	2	9	28	301	20	34	559	43
Base Volume Adjustment Factor	1.0000	1.0000	1.0000	1.0000	1.0000	1.0000	1.0000	1.0000	1.0000	1.0000	1.0000	1.0000
Heavy Vehicles Percentage [%]	2.00	2.00	2.00	2.00	2.00	2.00	2.00	2.00	2.00	2.00	2.00	2.00
Growth Rate	1.02	1.02	1.02	1.02	1.02	1.02	1.02	1.02	1.02	1.02	1.02	1.02
In-Process Volume [veh/h]	0	0	0	0	0	0	0	0	0	0	0	0
Site-Generated Trips [veh/h]	0	0	0	0	0	0	0	-3	0	0	3	0
Diverted Trips [veh/h]	0	0	0	0	0	0	0	0	0	0	0	0
Pass-by Trips [veh/h]	0	0	0	0	0	0	0	0	0	0	0	0
Existing Site Adjustment Volume [veh/h]	0	0	0	0	0	0	0	0	0	0	0	0
Other Volume [veh/h]	0	0	0	0	0	0	0	0	0	0	0	0
Total Hourly Volume [veh/h]	20	9	20	9	2	9	29	304	20	35	573	44
Peak Hour Factor	1.0000	1.0000	1.0000	1.0000	1.0000	1.0000	1.0000	1.0000	1.0000	1.0000	1.0000	1.0000
Other Adjustment Factor	1.0000	1.0000	1.0000	1.0000	1.0000	1.0000	1.0000	1.0000	1.0000	1.0000	1.0000	1.0000
Total 15-Minute Volume [veh/h]	5	2	5	2	1	2	7	76	5	9	143	11
Total Analysis Volume [veh/h]	20	9	20	9	2	9	29	304	20	35	573	44
Pedestrian Volume [ped/h]	0			0			0			0		
Bicycle Volume [bicycles/h]	0			0			0			0		

Intersection Settings

Cycle Length [s]	100
Lost time [s]	10.00

Phasing & Timing

Control Type	Permiss	Permiss	Permiss	Permiss	Permiss	Permiss	Permiss	Permiss	Permiss	Permiss	Permiss	Permiss
Signal group	0	1	0	0	1	0	0	1	0	0	1	0
Auxiliary Signal Groups												
Lead / Lag	-	-	-	-	-	-	-	-	-	-	-	-

Movement, Approach, & Intersection Results

V/C, Movement V/C Ratio	0.01	0.02	0.02	0.01	0.01	0.01	0.02	0.11	0.11	0.02	0.19	0.19
Intersection LOS	A											
Intersection V/C	0.335											

Intersection Level Of Service Report
Intersection 14: Broadway & Louise St

Control Type:	Signalized	Delay (sec / veh):	-
Analysis Method:	ICU 1	Level Of Service:	A
Analysis Period:	15 minutes	Volume to Capacity (v/c):	0.458

Intersection Setup

Name	Louise St			Louise St			Broadway			Broadway		
Approach	Northbound			Southbound			Eastbound			Westbound		
Lane Configuration												
Turning Movement	Left	Thru	Right	Left	Thru	Right	Left	Thru	Right	Left	Thru	Right
Lane Width [ft]	12.00	12.00	12.00	12.00	12.00	12.00	12.00	12.00	12.00	12.00	12.00	12.00
No. of Lanes in Pocket	0	0	0	0	0	0	0	0	0	0	0	0
Pocket Length [ft]	100.00	100.00	100.00	100.00	100.00	100.00	100.00	100.00	100.00	100.00	100.00	100.00
Speed [mph]	30.00			30.00			30.00			30.00		
Grade [%]	0.00			0.00			0.00			0.00		
Crosswalk	Yes			Yes			Yes			Yes		

Volumes

Name	Louise St			Louise St			Broadway			Broadway		
Base Volume Input [veh/h]	26	79	37	39	149	23	29	243	22	27	539	38
Base Volume Adjustment Factor	1.0000	1.0000	1.0000	1.0000	1.0000	1.0000	1.0000	1.0000	1.0000	1.0000	1.0000	1.0000
Heavy Vehicles Percentage [%]	2.00	2.00	2.00	2.00	2.00	2.00	2.00	2.00	2.00	2.00	2.00	2.00
Growth Rate	1.01	1.01	1.01	1.01	1.01	1.01	1.01	1.01	1.01	1.01	1.01	1.01
In-Process Volume [veh/h]	0	0	0	0	0	0	0	0	0	0	0	0
Site-Generated Trips [veh/h]	0	0	0	0	0	0	0	-3	0	0	3	0
Diverted Trips [veh/h]	0	0	0	0	0	0	0	0	0	0	0	0
Pass-by Trips [veh/h]	0	0	0	0	0	0	0	0	0	0	0	0
Existing Site Adjustment Volume [veh/h]	0	0	0	0	0	0	0	0	0	0	0	0
Other Volume [veh/h]	0	0	0	0	0	0	0	0	0	0	0	0
Total Hourly Volume [veh/h]	26	80	37	39	150	23	29	242	22	27	547	38
Peak Hour Factor	1.0000	1.0000	1.0000	1.0000	1.0000	1.0000	1.0000	1.0000	1.0000	1.0000	1.0000	1.0000
Other Adjustment Factor	1.0000	1.0000	1.0000	1.0000	1.0000	1.0000	1.0000	1.0000	1.0000	1.0000	1.0000	1.0000
Total 15-Minute Volume [veh/h]	7	20	9	10	38	6	7	61	6	7	137	10
Total Analysis Volume [veh/h]	26	80	37	39	150	23	29	242	22	27	547	38
Pedestrian Volume [ped/h]	0			0			0			0		
Bicycle Volume [bicycles/h]	0			0			0			0		

Intersection Settings

Cycle Length [s]	100
Lost time [s]	10.00

Phasing & Timing

Control Type	Permiss	Permiss	Permiss	Permiss	Permiss	Permiss	Permiss	Permiss	Permiss	Permiss	Permiss	Permiss
Signal group	0	1	0	0	1	0	0	1	0	0	1	0
Auxiliary Signal Groups												
Lead / Lag	-	-	-	-	-	-	-	-	-	-	-	-

Movement, Approach, & Intersection Results

V/C, Movement V/C Ratio	0.02	0.09	0.09	0.02	0.13	0.13	0.02	0.08	0.08	0.02	0.19	0.19
Intersection LOS	A											
Intersection V/C	0.458											

Intersection Level Of Service Report
Intersection 15: Broadway and Kenwood St

Control Type:	Signalized	Delay (sec / veh):	-
Analysis Method:	ICU 1	Level Of Service:	A
Analysis Period:	15 minutes	Volume to Capacity (v/c):	0.373

Intersection Setup

Name	Kenwood St			Kenwood St			Broadway			Broadway		
Approach	Northbound			Southbound			Eastbound			Westbound		
Lane Configuration												
Turning Movement	Left	Thru	Right	Left	Thru	Right	Left	Thru	Right	Left	Thru	Right
Lane Width [ft]	12.00	12.00	12.00	12.00	12.00	12.00	12.00	12.00	12.00	12.00	12.00	12.00
No. of Lanes in Pocket	0	0	0	0	0	0	0	0	0	0	0	0
Pocket Length [ft]	100.00	100.00	100.00	100.00	100.00	100.00	100.00	100.00	100.00	100.00	100.00	100.00
Speed [mph]	30.00			30.00			30.00			30.00		
Grade [%]	0.00			0.00			0.00			0.00		
Crosswalk	Yes			Yes			Yes			Yes		

Volumes

Name	Kenwood St			Kenwood St			Broadway			Broadway		
Base Volume Input [veh/h]	10	33	21	7	42	18	10	250	10	22	645	25
Base Volume Adjustment Factor	1.0000	1.0000	1.0000	1.0000	1.0000	1.0000	1.0000	1.0000	1.0000	1.0000	1.0000	1.0000
Heavy Vehicles Percentage [%]	2.00	2.00	2.00	2.00	2.00	2.00	2.00	2.00	2.00	2.00	2.00	2.00
Growth Rate	1.01	1.01	1.01	1.01	1.01	1.01	1.01	1.01	1.01	1.01	1.01	1.01
In-Process Volume [veh/h]	0	0	0	0	0	0	0	0	0	0	0	0
Site-Generated Trips [veh/h]	0	0	0	0	0	0	0	-3	0	0	3	0
Diverted Trips [veh/h]	0	0	0	0	0	0	0	0	0	0	0	0
Pass-by Trips [veh/h]	0	0	0	0	0	0	0	0	0	0	0	0
Existing Site Adjustment Volume [veh/h]	0	0	0	0	0	0	0	0	0	0	0	0
Other Volume [veh/h]	0	0	0	0	0	0	0	0	0	0	0	0
Total Hourly Volume [veh/h]	10	33	21	7	42	18	10	250	10	22	654	25
Peak Hour Factor	1.0000	1.0000	1.0000	1.0000	1.0000	1.0000	1.0000	1.0000	1.0000	1.0000	1.0000	1.0000
Other Adjustment Factor	1.0000	1.0000	1.0000	1.0000	1.0000	1.0000	1.0000	1.0000	1.0000	1.0000	1.0000	1.0000
Total 15-Minute Volume [veh/h]	3	8	5	2	11	5	3	63	3	6	164	6
Total Analysis Volume [veh/h]	10	33	21	7	42	18	10	250	10	22	654	25
Pedestrian Volume [ped/h]	0			0			0			0		
Bicycle Volume [bicycles/h]	0			0			0			0		

Intersection Settings

Cycle Length [s]	100
Lost time [s]	10.00

Phasing & Timing

Control Type	Permiss	Permiss	Permiss	Permiss	Permiss	Permiss	Permiss	Permiss	Permiss	Permiss	Permiss	Permiss
Signal group	0	1	0	0	1	0	0	1	0	0	1	0
Auxiliary Signal Groups												
Lead / Lag	-	-	-	-	-	-	-	-	-	-	-	-

Movement, Approach, & Intersection Results

V/C, Movement V/C Ratio	0.01	0.04	0.04	0.00	0.04	0.04	0.01	0.08	0.08	0.01	0.22	0.22
Intersection LOS	A											
Intersection V/C	0.373											

Intersection Level Of Service Report
Intersection 16: Broadway & Jackon St

Control Type:	Signalized	Delay (sec / veh):	-
Analysis Method:	ICU 1	Level Of Service:	A
Analysis Period:	15 minutes	Volume to Capacity (v/c):	0.416

Intersection Setup

Name	Jackson St			Jackson St			Broadway					
Approach	Northbound			Southbound			Eastbound			Westbound		
Lane Configuration												
Turning Movement	Left	Thru	Right	Left	Thru	Right	Left	Thru	Right	Left	Thru	Right
Lane Width [ft]	12.00	12.00	12.00	12.00	12.00	12.00	12.00	12.00	12.00	12.00	12.00	12.00
No. of Lanes in Pocket	0	0	0	0	0	0	0	0	0	0	0	0
Pocket Length [ft]	100.00	100.00	100.00	100.00	100.00	100.00	100.00	100.00	100.00	100.00	100.00	100.00
Speed [mph]	30.00			30.00			30.00			30.00		
Grade [%]	0.00			0.00			0.00			0.00		
Crosswalk	Yes			Yes			Yes			Yes		

Volumes

Name	Jackson St			Jackson St			Broadway					
Base Volume Input [veh/h]	22	101	25	42	154	30	18	211	11	18	482	34
Base Volume Adjustment Factor	1.0000	1.0000	1.0000	1.0000	1.0000	1.0000	1.0000	1.0000	1.0000	1.0000	1.0000	1.0000
Heavy Vehicles Percentage [%]	2.00	2.00	2.00	2.00	2.00	2.00	2.00	2.00	2.00	2.00	2.00	2.00
Growth Rate	1.01	1.01	1.01	1.01	1.01	1.01	1.01	1.01	1.01	1.01	1.01	1.01
In-Process Volume [veh/h]	0	0	0	0	0	0	0	0	0	0	0	0
Site-Generated Trips [veh/h]	0	0	0	3	0	3	-3	0	0	0	0	-3
Diverted Trips [veh/h]	0	0	0	0	0	0	0	0	0	0	0	0
Pass-by Trips [veh/h]	0	0	0	0	0	0	0	0	0	0	0	0
Existing Site Adjustment Volume [veh/h]	0	0	0	0	0	0	0	0	0	0	0	0
Other Volume [veh/h]	0	0	0	0	0	0	0	0	0	0	0	0
Total Hourly Volume [veh/h]	22	102	25	45	156	33	15	213	11	18	487	31
Peak Hour Factor	1.0000	1.0000	1.0000	1.0000	1.0000	1.0000	1.0000	1.0000	1.0000	1.0000	1.0000	1.0000
Other Adjustment Factor	1.0000	1.0000	1.0000	1.0000	1.0000	1.0000	1.0000	1.0000	1.0000	1.0000	1.0000	1.0000
Total 15-Minute Volume [veh/h]	6	26	6	11	39	8	4	53	3	5	122	8
Total Analysis Volume [veh/h]	22	102	25	45	156	33	15	213	11	18	487	31
Pedestrian Volume [ped/h]	0			0			0			0		
Bicycle Volume [bicycles/h]	0			0			0			0		

Intersection Settings

Cycle Length [s]	100
Lost time [s]	10.00

Phasing & Timing

Control Type	Permiss	Permiss	Permiss	Permiss	Permiss	Permiss	Permiss	Permiss	Permiss	Permiss	Permiss	Permiss
Signal group	0	1	0	0	1	0	0	1	0	0	1	0
Auxiliary Signal Groups												
Lead / Lag	-	-	-	-	-	-	-	-	-	-	-	-

Movement, Approach, & Intersection Results

V/C, Movement V/C Ratio	0.01	0.09	0.09	0.03	0.13	0.02	0.01	0.07	0.07	0.01	0.17	0.17
Intersection LOS	A											
Intersection V/C	0.416											

Intersection Level Of Service Report
Intersection 1: Brand Blvd & California Ave

Control Type:	Signalized	Delay (sec / veh):	-
Analysis Method:	ICU 1	Level Of Service:	B
Analysis Period:	15 minutes	Volume to Capacity (v/c):	0.621

Intersection Setup

Name	Brand Blvd			Brand Blvd			California Ave			Calfornia Ave		
Approach	Northbound			Southbound			Eastbound			Westbound		
Lane Configuration												
Turning Movement	Left	Thru	Right	Left	Thru	Right	Left	Thru	Right	Left	Thru	Right
Lane Width [ft]	12.00	12.00	12.00	12.00	12.00	12.00	12.00	12.00	12.00	12.00	12.00	12.00
No. of Lanes in Pocket	0	0	0	0	0	0	0	0	0	0	0	0
Pocket Length [ft]	100.00	100.00	100.00	100.00	100.00	100.00	100.00	100.00	100.00	100.00	100.00	100.00
Speed [mph]	30.00			30.00			30.00			30.00		
Grade [%]	0.00			0.00			0.00			0.00		
Crosswalk	Yes			Yes			Yes			Yes		

Volumes

Name	Brand Blvd			Brand Blvd			California Ave			Calfornia Ave		
Base Volume Input [veh/h]	49	450	38	34	613	112	27	138	43	28	168	52
Base Volume Adjustment Factor	1.0000	1.0000	1.0000	1.0000	1.0000	1.0000	1.0000	1.0000	1.0000	1.0000	1.0000	1.0000
Heavy Vehicles Percentage [%]	2.00	2.00	2.00	2.00	2.00	2.00	2.00	2.00	2.00	2.00	2.00	2.00
Growth Rate	1.05	1.05	1.05	1.05	1.05	1.05	1.05	1.05	1.05	1.05	1.05	1.05
In-Process Volume [veh/h]	6	84	8	10	149	3	11	20	13	4	7	9
Site-Generated Trips [veh/h]	0	0	0	0	0	0	0	0	0	0	0	0
Diverted Trips [veh/h]	0	0	0	0	0	0	0	0	0	0	0	0
Pass-by Trips [veh/h]	0	0	0	0	0	0	0	0	0	0	0	0
Existing Site Adjustment Volume [veh/h]	0	0	0	0	0	0	0	0	0	0	0	0
Other Volume [veh/h]	0	0	0	0	0	0	0	0	0	0	0	0
Total Hourly Volume [veh/h]	57	557	48	46	793	121	39	165	58	33	183	64
Peak Hour Factor	1.0000	1.0000	1.0000	1.0000	1.0000	1.0000	1.0000	1.0000	1.0000	1.0000	1.0000	1.0000
Other Adjustment Factor	1.0000	1.0000	1.0000	1.0000	1.0000	1.0000	1.0000	1.0000	1.0000	1.0000	1.0000	1.0000
Total 15-Minute Volume [veh/h]	14	139	12	12	198	30	10	41	15	8	46	16
Total Analysis Volume [veh/h]	57	557	48	46	793	121	39	165	58	33	183	64
Pedestrian Volume [ped/h]	0			0			0			0		
Bicycle Volume [bicycles/h]	0			0			0			0		

Intersection Settings

Cycle Length [s]	100
Lost time [s]	10.00

Phasing & Timing

Control Type	Protecte	Permiss	Permiss	Protecte	Permiss	Permiss	Permiss	Permiss	Permiss	Permiss	Permiss	Permiss
Signal group	1	1	0	1	1	0	0	1	0	0	1	0
Auxiliary Signal Groups												
Lead / Lag	Lag	-	-	Lag	-	-	-	-	-	-	-	-

Movement, Approach, & Intersection Results

V/C, Movement V/C Ratio	0.04	0.19	0.19	0.03	0.29	0.29	0.02	0.16	0.16	0.02	0.18	0.18
Intersection LOS	B											
Intersection V/C	0.621											

Intersection Level Of Service Report
Intersection 2: California Ave & Maryland Ave

Control Type:	Signalized	Delay (sec / veh):	-
Analysis Method:	ICU 1	Level Of Service:	A
Analysis Period:	15 minutes	Volume to Capacity (v/c):	0.412

Intersection Setup

Name	Maryland Ave			Maryland Ave			Calfornia Ave			California Ave		
Approach	Northbound			Southbound			Eastbound			Westbound		
Lane Configuration												
Turning Movement	Left	Thru	Right	Left	Thru	Right	Left	Thru	Right	Left	Thru	Right
Lane Width [ft]	12.00	12.00	12.00	12.00	12.00	12.00	12.00	12.00	12.00	12.00	12.00	12.00
No. of Lanes in Pocket	0	0	0	0	0	0	0	0	0	0	0	0
Pocket Length [ft]	100.00	100.00	100.00	100.00	100.00	100.00	100.00	100.00	100.00	100.00	100.00	100.00
Speed [mph]	30.00			30.00			30.00			30.00		
Grade [%]	0.00			0.00			0.00			0.00		
Crosswalk	Yes			Yes			Yes			Yes		

Volumes

Name	Maryland Ave			Maryland Ave			Calfornia Ave			California Ave		
Base Volume Input [veh/h]	12	79	21	10	41	3	12	220	71	31	146	19
Base Volume Adjustment Factor	1.0000	1.0000	1.0000	1.0000	1.0000	1.0000	1.0000	1.0000	1.0000	1.0000	1.0000	1.0000
Heavy Vehicles Percentage [%]	2.00	2.00	2.00	2.00	2.00	2.00	2.00	2.00	2.00	2.00	2.00	2.00
Growth Rate	1.05	1.05	1.05	1.05	1.05	1.05	1.05	1.05	1.05	1.05	1.05	1.05
In-Process Volume [veh/h]	15	6	2	0	6	0	0	17	20	1	4	0
Site-Generated Trips [veh/h]	0	0	0	0	0	0	0	0	0	0	0	0
Diverted Trips [veh/h]	0	0	0	0	0	0	0	0	0	0	0	0
Pass-by Trips [veh/h]	0	0	0	0	0	0	0	0	0	0	0	0
Existing Site Adjustment Volume [veh/h]	0	0	0	0	0	0	0	0	0	0	0	0
Other Volume [veh/h]	0	0	0	0	0	0	0	0	0	0	0	0
Total Hourly Volume [veh/h]	28	89	24	11	49	3	13	248	95	34	157	20
Peak Hour Factor	1.0000	1.0000	1.0000	1.0000	1.0000	1.0000	1.0000	1.0000	1.0000	1.0000	1.0000	1.0000
Other Adjustment Factor	1.0000	1.0000	1.0000	1.0000	1.0000	1.0000	1.0000	1.0000	1.0000	1.0000	1.0000	1.0000
Total 15-Minute Volume [veh/h]	7	22	6	3	12	1	3	62	24	9	39	5
Total Analysis Volume [veh/h]	28	89	24	11	49	3	13	248	95	34	157	20
Pedestrian Volume [ped/h]	0			0			0			0		
Bicycle Volume [bicycles/h]	0			0			0			0		

Intersection Settings

Cycle Length [s]	100
Lost time [s]	10.00

Phasing & Timing

Control Type	Split	Split	Split	Split	Split	Split	Permiss	Permiss	Permiss	Permiss	Permiss	Permiss
Signal group	0	1	0	0	1	0	0	1	0	0	1	0
Auxiliary Signal Groups												
Lead / Lag	-	-	-	-	-	-	-	-	-	-	-	-

Movement, Approach, & Intersection Results

V/C, Movement V/C Ratio	0.02	0.09	0.09	0.01	0.04	0.04	0.01	0.16	0.06	0.02	0.13	0.13
Intersection LOS	A											
Intersection V/C	0.412											

Intersection Level Of Service Report
Intersection 3: California Ave & Louise St

Control Type:	All-way stop	Delay (sec / veh):	13.2
Analysis Method:	HCM 2010	Level Of Service:	B
Analysis Period:	15 minutes	Volume to Capacity (v/c):	0.514

Intersection Setup

Name	Louise St			Louise St			California Ave			California Ave		
Approach	Northbound			Southbound			Eastbound			Westbound		
Lane Configuration												
Turning Movement	Left	Thru	Right	Left	Thru	Right	Left	Thru	Right	Left	Thru	Right
Lane Width [ft]	12.00	12.00	12.00	12.00	12.00	12.00	12.00	12.00	12.00	12.00	12.00	12.00
No. of Lanes in Pocket	0	0	0	0	0	0	0	0	0	0	0	0
Pocket Length [ft]	100.00	100.00	100.00	100.00	100.00	100.00	100.00	100.00	100.00	100.00	100.00	100.00
Speed [mph]	30.00			30.00			30.00			30.00		
Grade [%]	0.00			0.00			0.00			0.00		
Crosswalk	Yes			Yes			Yes			Yes		

Volumes

Name	Louise St			Louise St			California Ave			California Ave		
Base Volume Input [veh/h]	31	111	13	38	215	36	18	130	14	23	255	32
Base Volume Adjustment Factor	1.0000	1.0000	1.0000	1.0000	1.0000	1.0000	1.0000	1.0000	1.0000	1.0000	1.0000	1.0000
Heavy Vehicles Percentage [%]	2.00	2.00	2.00	2.00	2.00	2.00	2.00	2.00	2.00	2.00	2.00	2.00
Growth Rate	1.04	1.04	1.04	1.04	1.04	1.04	1.04	1.04	1.04	1.04	1.04	1.04
In-Process Volume [veh/h]	2	2	2	0	2	0	0	19	1	1	4	0
Site-Generated Trips [veh/h]	0	0	0	0	0	0	0	0	0	0	0	0
Diverted Trips [veh/h]	0	0	0	0	0	0	0	0	0	0	0	0
Pass-by Trips [veh/h]	0	0	0	0	0	0	0	0	0	0	0	0
Existing Site Adjustment Volume [veh/h]	0	0	0	0	0	0	0	0	0	0	0	0
Other Volume [veh/h]	0	0	0	0	0	0	0	0	0	0	0	0
Total Hourly Volume [veh/h]	34	117	16	40	226	37	19	154	16	25	269	33
Peak Hour Factor	1.0000	1.0000	1.0000	1.0000	1.0000	1.0000	1.0000	1.0000	1.0000	1.0000	1.0000	1.0000
Other Adjustment Factor	1.0000	1.0000	1.0000	1.0000	1.0000	1.0000	1.0000	1.0000	1.0000	1.0000	1.0000	1.0000
Total 15-Minute Volume [veh/h]	9	29	4	10	57	9	5	39	4	6	67	8
Total Analysis Volume [veh/h]	34	117	16	40	226	37	19	154	16	25	269	33
Pedestrian Volume [ped/h]	0			0			0			0		

Intersection Settings

Lanes

Capacity per Entry Lane [veh/h]	596	628	607	637
Degree of Utilization, x	0.28	0.48	0.31	0.51

Movement, Approach, & Intersection Results

95th-Percentile Queue Length [veh]	1.14	2.63	1.32	2.95
95th-Percentile Queue Length [ft]	28.56	65.73	33.09	73.70
Approach Delay [s/veh]	11.37	13.97	11.59	14.49
Approach LOS	B	B	B	B
Intersection Delay [s/veh]	13.25			
Intersection LOS	B			

Intersection Level Of Service Report
Intersection 4: California Ave & Kenwood St

Control Type:	All-way stop	Delay (sec / veh):	10.4
Analysis Method:	HCM 2010	Level Of Service:	B
Analysis Period:	15 minutes	Volume to Capacity (v/c):	0.442

Intersection Setup

Name	Kenwood St			Kenwood St			California Ave			California Ave		
Approach	Northbound			Southbound			Eastbound			Westbound		
Lane Configuration												
Turning Movement	Left	Thru	Right	Left	Thru	Right	Left	Thru	Right	Left	Thru	Right
Lane Width [ft]	12.00	12.00	12.00	12.00	12.00	12.00	12.00	12.00	12.00	12.00	12.00	12.00
No. of Lanes in Pocket	0	0	0	0	0	0	0	0	0	0	0	0
Pocket Length [ft]	100.00	100.00	100.00	100.00	100.00	100.00	100.00	100.00	100.00	100.00	100.00	100.00
Speed [mph]	30.00			30.00			30.00			30.00		
Grade [%]	0.00			0.00			0.00			0.00		
Crosswalk	Yes			Yes			Yes			Yes		

Volumes

Name	Kenwood St			Kenwood St			California Ave			California Ave		
Base Volume Input [veh/h]	21	42	34	21	71	16	13	136	30	11	291	13
Base Volume Adjustment Factor	1.0000	1.0000	1.0000	1.0000	1.0000	1.0000	1.0000	1.0000	1.0000	1.0000	1.0000	1.0000
Heavy Vehicles Percentage [%]	2.00	2.00	2.00	2.00	2.00	2.00	2.00	2.00	2.00	2.00	2.00	2.00
Growth Rate	1.04	1.04	1.04	1.04	1.04	1.04	1.04	1.04	1.04	1.04	1.04	1.04
In-Process Volume [veh/h]	0	0	0	0	0	0	0	21	0	0	5	0
Site-Generated Trips [veh/h]	0	0	0	0	0	0	0	0	0	0	0	0
Diverted Trips [veh/h]	0	0	0	0	0	0	0	0	0	0	0	0
Pass-by Trips [veh/h]	0	0	0	0	0	0	0	0	0	0	0	0
Existing Site Adjustment Volume [veh/h]	0	0	0	0	0	0	0	0	0	0	0	0
Other Volume [veh/h]	0	0	0	0	0	0	0	0	0	0	0	0
Total Hourly Volume [veh/h]	22	44	35	22	74	17	14	162	31	11	308	14
Peak Hour Factor	1.0000	1.0000	1.0000	1.0000	1.0000	1.0000	1.0000	1.0000	1.0000	1.0000	1.0000	1.0000
Other Adjustment Factor	1.0000	1.0000	1.0000	1.0000	1.0000	1.0000	1.0000	1.0000	1.0000	1.0000	1.0000	1.0000
Total 15-Minute Volume [veh/h]	6	11	9	6	19	4	4	41	8	3	77	4
Total Analysis Volume [veh/h]	22	44	35	22	74	17	14	162	31	11	308	14
Pedestrian Volume [ped/h]	0			0			0			0		

Intersection Settings

Lanes

Capacity per Entry Lane [veh/h]	682	671	739	754
Degree of Utilization, x	0.15	0.17	0.28	0.44

Movement, Approach, & Intersection Results

95th-Percentile Queue Length [veh]	0.52	0.60	1.15	2.28
95th-Percentile Queue Length [ft]	12.94	15.06	28.71	56.88
Approach Delay [s/veh]	9.19	9.45	9.76	11.50
Approach LOS	A	A	A	B
Intersection Delay [s/veh]	10.41			
Intersection LOS	B			

Intersection Level Of Service Report
Intersection 5: California Ave & Jackson St

Control Type:	All-way stop	Delay (sec / veh):	18.4
Analysis Method:	HCM 2010	Level Of Service:	C
Analysis Period:	15 minutes	Volume to Capacity (v/c):	0.659

Intersection Setup

Name	Jackson St			Jackson St			California Ave			California Ave		
Approach	Northbound			Southbound			Eastbound			Westbound		
Lane Configuration												
Turning Movement	Left	Thru	Right	Left	Thru	Right	Left	Thru	Right	Left	Thru	Right
Lane Width [ft]	12.00	12.00	12.00	12.00	12.00	12.00	12.00	12.00	12.00	12.00	12.00	12.00
No. of Lanes in Pocket	0	0	0	0	0	0	0	0	0	0	0	0
Pocket Length [ft]	100.00	100.00	100.00	100.00	100.00	100.00	100.00	100.00	100.00	100.00	100.00	100.00
Speed [mph]	30.00			30.00			30.00			30.00		
Grade [%]	0.00			0.00			0.00			0.00		
Crosswalk	Yes			Yes			Yes			Yes		

Volumes

Name	Jackson St			Jackson St			California Ave			California Ave		
Base Volume Input [veh/h]	21	145	25	48	289	16	10	164	28	47	261	47
Base Volume Adjustment Factor	1.0000	1.0000	1.0000	1.0000	1.0000	1.0000	1.0000	1.0000	1.0000	1.0000	1.0000	1.0000
Heavy Vehicles Percentage [%]	2.00	2.00	2.00	2.00	2.00	2.00	2.00	2.00	2.00	2.00	2.00	2.00
Growth Rate	1.04	1.04	1.04	1.04	1.04	1.04	1.04	1.04	1.04	1.04	1.04	1.04
In-Process Volume [veh/h]	0	0	0	0	0	0	0	21	0	0	5	0
Site-Generated Trips [veh/h]	0	0	0	0	0	0	0	0	0	0	0	0
Diverted Trips [veh/h]	0	0	0	0	0	0	0	0	0	0	0	0
Pass-by Trips [veh/h]	0	0	0	0	0	0	0	0	0	0	0	0
Existing Site Adjustment Volume [veh/h]	0	0	0	0	0	0	0	0	0	0	0	0
Other Volume [veh/h]	0	0	0	0	0	0	0	0	0	0	0	0
Total Hourly Volume [veh/h]	22	151	26	50	301	17	10	192	29	49	276	49
Peak Hour Factor	1.0000	1.0000	1.0000	1.0000	1.0000	1.0000	1.0000	1.0000	1.0000	1.0000	1.0000	1.0000
Other Adjustment Factor	1.0000	1.0000	1.0000	1.0000	1.0000	1.0000	1.0000	1.0000	1.0000	1.0000	1.0000	1.0000
Total 15-Minute Volume [veh/h]	6	38	7	13	75	4	3	48	7	12	69	12
Total Analysis Volume [veh/h]	22	151	26	50	301	17	10	192	29	49	276	49
Pedestrian Volume [ped/h]	0			0			0			0		

Intersection Settings

Lanes

Capacity per Entry Lane [veh/h]	529	560	539	567
Degree of Utilization, x	0.38	0.66	0.43	0.66

Movement, Approach, & Intersection Results

95th-Percentile Queue Length [veh]	1.74	4.79	2.13	4.84
95th-Percentile Queue Length [ft]	43.43	119.71	53.33	120.98
Approach Delay [s/veh]	13.86	20.88	14.60	20.79
Approach LOS	B	C	B	C
Intersection Delay [s/veh]	18.42			
Intersection LOS	C			

Intersection Level Of Service Report
Intersection 6: Wilson Ave & Brand Blvd

Control Type:	Signalized	Delay (sec / veh):	-
Analysis Method:	ICU 1	Level Of Service:	A
Analysis Period:	15 minutes	Volume to Capacity (v/c):	0.516

Intersection Setup

Name	Brand Blvd			Brand Blvd			Wilson Ave			Wilson Ave		
Approach	Northbound			Southbound			Eastbound			Westbound		
Lane Configuration												
Turning Movement	Left	Thru	Right	Left	Thru	Right	Left	Thru	Right	Left	Thru	Right
Lane Width [ft]	12.00	12.00	12.00	12.00	12.00	12.00	12.00	12.00	12.00	12.00	12.00	12.00
No. of Lanes in Pocket	0	0	0	0	0	0	0	0	0	0	0	0
Pocket Length [ft]	100.00	100.00	100.00	100.00	100.00	100.00	100.00	100.00	100.00	100.00	100.00	100.00
Speed [mph]	30.00			30.00			30.00			30.00		
Grade [%]	0.00			0.00			0.00			0.00		
Crosswalk	Yes			Yes			Yes			Yes		

Volumes

Name	Brand Blvd			Brand Blvd			Wilson Ave			Wilson Ave		
Base Volume Input [veh/h]	43	456	37	66	555	44	18	62	31	63	160	49
Base Volume Adjustment Factor	1.0000	1.0000	1.0000	1.0000	1.0000	1.0000	1.0000	1.0000	1.0000	1.0000	1.0000	1.0000
Heavy Vehicles Percentage [%]	2.00	2.00	2.00	2.00	2.00	2.00	2.00	2.00	2.00	2.00	2.00	2.00
Growth Rate	1.05	1.05	1.05	1.05	1.05	1.05	1.05	1.05	1.05	1.05	1.05	1.05
In-Process Volume [veh/h]	12	63	7	9	141	16	18	12	8	6	11	17
Site-Generated Trips [veh/h]	0	0	0	0	0	0	0	0	0	0	0	0
Diverted Trips [veh/h]	0	0	0	0	0	0	0	0	0	0	0	0
Pass-by Trips [veh/h]	0	0	0	0	0	0	0	0	0	0	0	0
Existing Site Adjustment Volume [veh/h]	0	0	0	0	0	0	0	0	0	0	0	0
Other Volume [veh/h]	0	0	0	0	0	0	0	0	0	0	0	0
Total Hourly Volume [veh/h]	57	542	46	78	724	62	37	77	41	72	179	68
Peak Hour Factor	1.0000	1.0000	1.0000	1.0000	1.0000	1.0000	1.0000	1.0000	1.0000	1.0000	1.0000	1.0000
Other Adjustment Factor	1.0000	1.0000	1.0000	1.0000	1.0000	1.0000	1.0000	1.0000	1.0000	1.0000	1.0000	1.0000
Total 15-Minute Volume [veh/h]	14	136	12	20	181	16	9	19	10	18	45	17
Total Analysis Volume [veh/h]	57	542	46	78	724	62	37	77	41	72	179	68
Pedestrian Volume [ped/h]	0			0			0			0		
Bicycle Volume [bicycles/h]	0			0			0			0		

Intersection Settings

Cycle Length [s]	100
Lost time [s]	10.00

Phasing & Timing

Control Type	Protecte	Permiss	Permiss	Protecte	Permiss	Permiss	Permiss	Permiss	Permiss	Permiss	Permiss	Permiss
Signal group	1	1	0	1	1	0	0	1	0	0	1	0
Auxiliary Signal Groups												
Lead / Lag	Lag	-	-	Lag	-	-	-	-	-	-	-	-

Movement, Approach, & Intersection Results

V/C, Movement V/C Ratio	0.04	0.18	0.18	0.05	0.25	0.25	0.02	0.05	0.03	0.05	0.11	0.04
Intersection LOS	A											
Intersection V/C	0.516											

Intersection Level Of Service Report
Intersection 7: Wilson Ave & Maryland Ave

Control Type:	Signalized	Delay (sec / veh):	-
Analysis Method:	ICU 1	Level Of Service:	A
Analysis Period:	15 minutes	Volume to Capacity (v/c):	0.398

Intersection Setup

Name	Maryland Ave			Maryland Ave			Wilson Ave			Wilson Ave		
Approach	Northbound			Southbound			Eastbound			Westbound		
Lane Configuration												
Turning Movement	Left	Thru	Right	Left	Thru	Right	Left	Thru	Right	Left	Thru	Right
Lane Width [ft]	12.00	12.00	12.00	12.00	12.00	12.00	12.00	12.00	12.00	12.00	12.00	12.00
No. of Lanes in Pocket	0	0	0	0	0	0	0	0	0	0	0	0
Pocket Length [ft]	100.00	100.00	100.00	100.00	100.00	100.00	100.00	100.00	100.00	100.00	100.00	100.00
Speed [mph]	30.00			30.00			30.00			30.00		
Grade [%]	0.00			0.00			0.00			0.00		
Crosswalk	Yes			Yes			Yes			Yes		

Volumes

Name	Maryland Ave			Maryland Ave			Wilson Ave			Wilson Ave		
Base Volume Input [veh/h]	10	1	13	36	28	35	16	93	52	42	259	61
Base Volume Adjustment Factor	1.0000	1.0000	1.0000	1.0000	1.0000	1.0000	1.0000	1.0000	1.0000	1.0000	1.0000	1.0000
Heavy Vehicles Percentage [%]	2.00	2.00	2.00	2.00	2.00	2.00	2.00	2.00	2.00	2.00	2.00	2.00
Growth Rate	1.05	1.05	1.05	1.05	1.05	1.05	1.05	1.05	1.05	1.05	1.05	1.05
In-Process Volume [veh/h]	0	12	0	1	10	4	8	20	1	0	24	1
Site-Generated Trips [veh/h]	0	0	0	0	0	0	0	0	0	0	0	0
Diverted Trips [veh/h]	0	0	0	0	0	0	0	0	0	0	0	0
Pass-by Trips [veh/h]	0	0	0	0	0	0	0	0	0	0	0	0
Existing Site Adjustment Volume [veh/h]	0	0	0	0	0	0	0	0	0	0	0	0
Other Volume [veh/h]	0	0	0	0	0	0	0	0	0	0	0	0
Total Hourly Volume [veh/h]	11	13	14	39	39	41	25	118	56	44	296	65
Peak Hour Factor	1.0000	1.0000	1.0000	1.0000	1.0000	1.0000	1.0000	1.0000	1.0000	1.0000	1.0000	1.0000
Other Adjustment Factor	1.0000	1.0000	1.0000	1.0000	1.0000	1.0000	1.0000	1.0000	1.0000	1.0000	1.0000	1.0000
Total 15-Minute Volume [veh/h]	3	3	4	10	10	10	6	30	14	11	74	16
Total Analysis Volume [veh/h]	11	13	14	39	39	41	25	118	56	44	296	65
Pedestrian Volume [ped/h]	0			0			0			0		
Bicycle Volume [bicycles/h]	0			0			0			0		

Intersection Settings

Cycle Length [s]	100
Lost time [s]	10.00

Phasing & Timing

Control Type	Permiss	Permiss	Permiss	Permiss	Permiss	Permiss	Permiss	Permiss	Permiss	Permiss	Permiss	Permiss
Signal group	0	1	0	0	1	0	0	1	0	0	1	0
Auxiliary Signal Groups												
Lead / Lag	-	-	-	-	-	-	-	-	-	-	-	-

Movement, Approach, & Intersection Results

V/C, Movement V/C Ratio	0.01	0.02	0.02	0.02	0.05	0.05	0.02	0.11	0.11	0.03	0.23	0.23
Intersection LOS	A											
Intersection V/C	0.398											

Intersection Level Of Service Report
Intersection 8: Wilson Ave & Louise St

Control Type:	Signalized	Delay (sec / veh):	-
Analysis Method:	ICU 1	Level Of Service:	A
Analysis Period:	15 minutes	Volume to Capacity (v/c):	0.536

Intersection Setup

Name	Louise St			Louise St			Wilson Ave			Wilson Ave		
Approach	Northbound			Southbound			Eastbound			Westbound		
Lane Configuration												
Turning Movement	Left	Thru	Right	Left	Thru	Right	Left	Thru	Right	Left	Thru	Right
Lane Width [ft]	12.00	12.00	12.00	12.00	12.00	12.00	12.00	12.00	12.00	12.00	12.00	12.00
No. of Lanes in Pocket	0	0	0	0	0	0	0	0	0	0	0	0
Pocket Length [ft]	100.00	100.00	100.00	100.00	100.00	100.00	100.00	100.00	100.00	100.00	100.00	100.00
Speed [mph]	30.00			30.00			30.00			30.00		
Grade [%]	0.00			0.00			0.00			0.00		
Crosswalk	Yes			Yes			Yes			Yes		

Volumes

Name	Louise St			Louise St			Wilson Ave			Wilson Ave		
Base Volume Input [veh/h]	27	90	56	57	172	30	6	158	34	33	305	46
Base Volume Adjustment Factor	1.0000	1.0000	1.0000	1.0000	1.0000	1.0000	1.0000	1.0000	1.0000	1.0000	1.0000	1.0000
Heavy Vehicles Percentage [%]	2.00	2.00	2.00	2.00	2.00	2.00	2.00	2.00	2.00	2.00	2.00	2.00
Growth Rate	1.04	1.04	1.04	1.04	1.04	1.04	1.04	1.04	1.04	1.04	1.04	1.04
In-Process Volume [veh/h]	15	6	2	0	4	0	0	11	10	2	10	0
Site-Generated Trips [veh/h]	0	0	0	0	0	0	0	0	0	0	0	0
Diverted Trips [veh/h]	0	0	0	0	0	0	0	0	0	0	0	0
Pass-by Trips [veh/h]	0	0	0	0	0	0	0	0	0	0	0	0
Existing Site Adjustment Volume [veh/h]	0	0	0	0	0	0	0	0	0	0	0	0
Other Volume [veh/h]	0	0	0	0	0	0	0	0	0	0	0	0
Total Hourly Volume [veh/h]	43	100	60	59	183	31	6	175	45	36	327	48
Peak Hour Factor	1.0000	1.0000	1.0000	1.0000	1.0000	1.0000	1.0000	1.0000	1.0000	1.0000	1.0000	1.0000
Other Adjustment Factor	1.0000	1.0000	1.0000	1.0000	1.0000	1.0000	1.0000	1.0000	1.0000	1.0000	1.0000	1.0000
Total 15-Minute Volume [veh/h]	11	25	15	15	46	8	2	44	11	9	82	12
Total Analysis Volume [veh/h]	43	100	60	59	183	31	6	175	45	36	327	48
Pedestrian Volume [ped/h]	0			0			0			0		
Bicycle Volume [bicycles/h]	0			0			0			0		

Intersection Settings

Cycle Length [s]	100
Lost time [s]	10.00

Phasing & Timing

Control Type	Permiss	Permiss	Permiss	Permiss	Permiss	Permiss	Permiss	Permiss	Permiss	Permiss	Permiss	Permiss
Signal group	0	1	0	0	1	0	0	1	0	0	1	0
Auxiliary Signal Groups												
Lead / Lag	-	-	-	-	-	-	-	-	-	-	-	-

Movement, Approach, & Intersection Results

V/C, Movement V/C Ratio	0.03	0.13	0.13	0.04	0.17	0.17	0.00	0.14	0.14	0.02	0.23	0.23
Intersection LOS	A											
Intersection V/C	0.536											

Intersection Level Of Service Report
Intersection 9: Wilson Ave & Kenwood St

Control Type:	Signalized	Delay (sec / veh):	-
Analysis Method:	ICU 1	Level Of Service:	A
Analysis Period:	15 minutes	Volume to Capacity (v/c):	0.436

Intersection Setup

Name	Kenwood St			Kenwood St			Wilson Ave			Wilson Ave		
Approach	Northbound			Southbound			Eastbound			Westbound		
Lane Configuration												
Turning Movement	Left	Thru	Right	Left	Thru	Right	Left	Thru	Right	Left	Thru	Right
Lane Width [ft]	12.00	12.00	12.00	12.00	12.00	12.00	12.00	12.00	12.00	12.00	12.00	12.00
No. of Lanes in Pocket	0	0	0	0	0	0	0	0	0	0	0	0
Pocket Length [ft]	100.00	100.00	100.00	100.00	100.00	100.00	100.00	100.00	100.00	100.00	100.00	100.00
Speed [mph]	30.00			30.00			30.00			30.00		
Grade [%]	0.00			0.00			0.00			0.00		
Crosswalk	Yes			Yes			Yes			Yes		

Volumes

Name	Kenwood St			Kenwood St			Wilson Ave			Wilson Ave		
Base Volume Input [veh/h]	14	60	16	21	55	17	13	209	52	26	317	29
Base Volume Adjustment Factor	1.0000	1.0000	1.0000	1.0000	1.0000	1.0000	1.0000	1.0000	1.0000	1.0000	1.0000	1.0000
Heavy Vehicles Percentage [%]	2.00	2.00	2.00	2.00	2.00	2.00	2.00	2.00	2.00	2.00	2.00	2.00
Growth Rate	1.04	1.04	1.04	1.04	1.04	1.04	1.04	1.04	1.04	1.04	1.04	1.04
In-Process Volume [veh/h]	8	2	5	0	0	0	0	10	3	1	4	0
Site-Generated Trips [veh/h]	0	0	0	0	0	0	0	0	0	0	0	0
Diverted Trips [veh/h]	0	0	0	0	0	0	0	0	0	0	0	0
Pass-by Trips [veh/h]	0	0	0	0	0	0	0	0	0	0	0	0
Existing Site Adjustment Volume [veh/h]	0	0	0	0	0	0	0	0	0	0	0	0
Other Volume [veh/h]	0	0	0	0	0	0	0	0	0	0	0	0
Total Hourly Volume [veh/h]	23	64	22	22	57	18	14	227	57	28	334	30
Peak Hour Factor	1.0000	1.0000	1.0000	1.0000	1.0000	1.0000	1.0000	1.0000	1.0000	1.0000	1.0000	1.0000
Other Adjustment Factor	1.0000	1.0000	1.0000	1.0000	1.0000	1.0000	1.0000	1.0000	1.0000	1.0000	1.0000	1.0000
Total 15-Minute Volume [veh/h]	6	16	6	6	14	5	4	57	14	7	84	8
Total Analysis Volume [veh/h]	23	64	22	22	57	18	14	227	57	28	334	30
Pedestrian Volume [ped/h]	0			0			0			0		
Bicycle Volume [bicycles/h]	0			0			0			0		

Intersection Settings

Cycle Length [s]	100
Lost time [s]	10.00

Phasing & Timing

Control Type	Permiss	Permiss	Permiss	Permiss	Permiss	Permiss	Permiss	Permiss	Permiss	Permiss	Permiss	Permiss
Signal group	0	1	0	0	1	0	0	1	0	0	1	0
Auxiliary Signal Groups												
Lead / Lag	-	-	-	-	-	-	-	-	-	-	-	-

Movement, Approach, & Intersection Results

V/C, Movement V/C Ratio	0.01	0.07	0.07	0.01	0.06	0.06	0.01	0.19	0.19	0.02	0.25	0.25
Intersection LOS	A											
Intersection V/C	0.436											

Intersection Level Of Service Report
Intersection 10: Wilson Ave & Jackson St

Control Type:	Signalized	Delay (sec / veh):	-
Analysis Method:	ICU 1	Level Of Service:	A
Analysis Period:	15 minutes	Volume to Capacity (v/c):	0.543

Intersection Setup

Name	Jackson St			Jackson St			Wilson Ave			Wilson Ave		
Approach	Northbound			Southbound			Eastbound			Westbound		
Lane Configuration												
Turning Movement	Left	Thru	Right	Left	Thru	Right	Left	Thru	Right	Left	Thru	Right
Lane Width [ft]	12.00	12.00	12.00	12.00	12.00	12.00	12.00	12.00	12.00	12.00	12.00	12.00
No. of Lanes in Pocket	0	0	0	0	0	0	0	0	0	0	0	0
Pocket Length [ft]	100.00	100.00	100.00	100.00	100.00	100.00	100.00	100.00	100.00	100.00	100.00	100.00
Speed [mph]	30.00			30.00			30.00			30.00		
Grade [%]	0.00			0.00			0.00			0.00		
Crosswalk	Yes			Yes			Yes			Yes		

Volumes

Name	Jackson St			Jackson St			Wilson Ave			Wilson Ave		
Base Volume Input [veh/h]	13	118	18	51	193	12	7	177	28	42	379	72
Base Volume Adjustment Factor	1.0000	1.0000	1.0000	1.0000	1.0000	1.0000	1.0000	1.0000	1.0000	1.0000	1.0000	1.0000
Heavy Vehicles Percentage [%]	2.00	2.00	2.00	2.00	2.00	2.00	2.00	2.00	2.00	2.00	2.00	2.00
Growth Rate	1.04	1.04	1.04	1.04	1.04	1.04	1.04	1.04	1.04	1.04	1.04	1.04
In-Process Volume [veh/h]	0	0	0	0	0	0	0	15	0	0	5	0
Site-Generated Trips [veh/h]	0	0	0	0	0	0	0	0	0	0	0	0
Diverted Trips [veh/h]	0	0	0	0	0	0	0	0	0	0	0	0
Pass-by Trips [veh/h]	0	0	0	0	0	0	0	0	0	0	0	0
Existing Site Adjustment Volume [veh/h]	0	0	0	0	0	0	0	0	0	0	0	0
Other Volume [veh/h]	0	0	0	0	0	0	0	0	0	0	0	0
Total Hourly Volume [veh/h]	14	123	19	53	201	12	7	199	29	44	399	75
Peak Hour Factor	1.0000	1.0000	1.0000	1.0000	1.0000	1.0000	1.0000	1.0000	1.0000	1.0000	1.0000	1.0000
Other Adjustment Factor	1.0000	1.0000	1.0000	1.0000	1.0000	1.0000	1.0000	1.0000	1.0000	1.0000	1.0000	1.0000
Total 15-Minute Volume [veh/h]	4	31	5	13	50	3	2	50	7	11	100	19
Total Analysis Volume [veh/h]	14	123	19	53	201	12	7	199	29	44	399	75
Pedestrian Volume [ped/h]	0			0			0			0		
Bicycle Volume [bicycles/h]	0			0			0			0		

Intersection Settings

Cycle Length [s]	100
Lost time [s]	10.00

Phasing & Timing

Control Type	Permiss	Permiss	Permiss	Permiss	Permiss	Permiss	Permiss	Permiss	Permiss	Permiss	Permiss	Permiss
Signal group	0	1	0	0	1	0	0	1	0	0	1	0
Auxiliary Signal Groups												
Lead / Lag	-	-	-	-	-	-	-	-	-	-	-	-

Movement, Approach, & Intersection Results

V/C, Movement V/C Ratio	0.01	0.09	0.09	0.03	0.13	0.13	0.00	0.14	0.14	0.03	0.30	0.30
Intersection LOS	A											
Intersection V/C	0.543											

Intersection Level Of Service Report
Intersection 11: Wilson Ave & Glendale Ave

Control Type:	Signalized	Delay (sec / veh):	-
Analysis Method:	ICU 1	Level Of Service:	C
Analysis Period:	15 minutes	Volume to Capacity (v/c):	0.746

Intersection Setup

Name							Wilson Ave			Wilson Ave		
Approach	Northbound			Southbound			Eastbound			Westbound		
Lane Configuration												
Turning Movement	Left	Thru	Right	Left	Thru	Right	Left	Thru	Right	Left	Thru	Right
Lane Width [ft]	12.00	12.00	12.00	12.00	12.00	12.00	12.00	12.00	12.00	12.00	12.00	12.00
No. of Lanes in Pocket	0	0	0	0	0	0	0	0	0	0	0	0
Pocket Length [ft]	100.00	100.00	100.00	100.00	100.00	100.00	100.00	100.00	100.00	100.00	100.00	100.00
Speed [mph]	30.00			30.00			30.00			30.00		
Grade [%]	0.00			0.00			0.00			0.00		
Crosswalk	Yes			Yes			Yes			Yes		

Volumes

Name							Wilson Ave			Wilson Ave		
Base Volume Input [veh/h]	73	494	17	59	743	150	55	105	44	106	417	63
Base Volume Adjustment Factor	1.0000	1.0000	1.0000	1.0000	1.0000	1.0000	1.0000	1.0000	1.0000	1.0000	1.0000	1.0000
Heavy Vehicles Percentage [%]	2.00	2.00	2.00	2.00	2.00	2.00	2.00	2.00	2.00	2.00	2.00	2.00
Growth Rate	1.04	1.04	1.04	1.04	1.04	1.04	1.04	1.04	1.04	1.04	1.04	1.04
In-Process Volume [veh/h]	1	10	0	0	12	1	4	10	1	0	3	0
Site-Generated Trips [veh/h]	0	0	0	0	0	0	0	0	0	0	0	0
Diverted Trips [veh/h]	0	0	0	0	0	0	0	0	0	0	0	0
Pass-by Trips [veh/h]	0	0	0	0	0	0	0	0	0	0	0	0
Existing Site Adjustment Volume [veh/h]	0	0	0	0	0	0	0	0	0	0	0	0
Other Volume [veh/h]	0	0	0	0	0	0	0	0	0	0	0	0
Total Hourly Volume [veh/h]	77	524	18	61	785	157	61	119	47	110	437	66
Peak Hour Factor	1.0000	1.0000	1.0000	1.0000	1.0000	1.0000	1.0000	1.0000	1.0000	1.0000	1.0000	1.0000
Other Adjustment Factor	1.0000	1.0000	1.0000	1.0000	1.0000	1.0000	1.0000	1.0000	1.0000	1.0000	1.0000	1.0000
Total 15-Minute Volume [veh/h]	19	131	5	15	196	39	15	30	12	28	109	17
Total Analysis Volume [veh/h]	77	524	18	61	785	157	61	119	47	110	437	66
Pedestrian Volume [ped/h]	0			0			0			0		
Bicycle Volume [bicycles/h]	0			0			0			0		

Intersection Settings

Cycle Length [s]	100
Lost time [s]	10.00

Phasing & Timing

Control Type	Protecte	Permiss	Permiss	Protecte	Permiss	Permiss	Protecte	Permiss	Permiss	Protecte	Permiss	Permiss
Signal group	1	1	0	1	1	0	1	1	0	1	1	0
Auxiliary Signal Groups												
Lead / Lag	Lag	-	-	Lag	-	-	Lag	-	-	Lag	-	-

Movement, Approach, & Intersection Results

V/C, Movement V/C Ratio	0.05	0.17	0.17	0.04	0.25	0.10	0.04	0.07	0.03	0.07	0.31	0.31
Intersection LOS	C											
Intersection V/C	0.746											

Intersection Level Of Service Report
Intersection 12: Broadway & Brand Blvd

Control Type:	Signalized	Delay (sec / veh):	-
Analysis Method:	ICU 1	Level Of Service:	A
Analysis Period:	15 minutes	Volume to Capacity (v/c):	0.492

Intersection Setup

Name	Brand Blvd			Brand Blvd			Broadway			Broadway		
Approach	Northbound			Southbound			Eastbound			Westbound		
Lane Configuration												
Turning Movement	Left	Thru	Right	Left	Thru	Right	Left	Thru	Right	Left	Thru	Right
Lane Width [ft]	12.00	12.00	12.00	12.00	12.00	12.00	12.00	12.00	12.00	12.00	12.00	12.00
No. of Lanes in Pocket	0	0	0	0	0	0	0	0	0	0	0	0
Pocket Length [ft]	100.00	100.00	100.00	100.00	100.00	100.00	100.00	100.00	100.00	100.00	100.00	100.00
Speed [mph]	30.00			30.00			30.00			30.00		
Grade [%]	0.00			0.00			0.00			0.00		
Crosswalk	Yes			Yes			Yes			Yes		

Volumes

Name	Brand Blvd			Brand Blvd			Broadway			Broadway		
Base Volume Input [veh/h]	64	368	45	88	396	62	29	263	51	90	373	90
Base Volume Adjustment Factor	1.0000	1.0000	1.0000	1.0000	1.0000	1.0000	1.0000	1.0000	1.0000	1.0000	1.0000	1.0000
Heavy Vehicles Percentage [%]	2.00	2.00	2.00	2.00	2.00	2.00	2.00	2.00	2.00	2.00	2.00	2.00
Growth Rate	1.05	1.05	1.05	1.05	1.05	1.05	1.05	1.05	1.05	1.05	1.05	1.05
In-Process Volume [veh/h]	4	62	12	2	146	3	1	54	9	17	44	6
Site-Generated Trips [veh/h]	0	0	0	0	0	0	0	0	0	0	0	0
Diverted Trips [veh/h]	0	0	0	0	0	0	0	0	0	0	0	0
Pass-by Trips [veh/h]	0	0	0	0	0	0	0	0	0	0	0	0
Existing Site Adjustment Volume [veh/h]	0	0	0	0	0	0	0	0	0	0	0	0
Other Volume [veh/h]	0	0	0	0	0	0	0	0	0	0	0	0
Total Hourly Volume [veh/h]	71	448	59	94	562	68	31	330	63	112	436	101
Peak Hour Factor	1.0000	1.0000	1.0000	1.0000	1.0000	1.0000	1.0000	1.0000	1.0000	1.0000	1.0000	1.0000
Other Adjustment Factor	1.0000	1.0000	1.0000	1.0000	1.0000	1.0000	1.0000	1.0000	1.0000	1.0000	1.0000	1.0000
Total 15-Minute Volume [veh/h]	18	112	15	24	141	17	8	83	16	28	109	25
Total Analysis Volume [veh/h]	71	448	59	94	562	68	31	330	63	112	436	101
Pedestrian Volume [ped/h]	0			0			0			0		
Bicycle Volume [bicycles/h]	0			0			0			0		

Intersection Settings

Cycle Length [s]	100
Lost time [s]	10.00

Phasing & Timing

Control Type	Protecte	Permiss	Permiss	Protecte	Permiss	Permiss	Protecte	Permiss	Permiss	Protecte	Permiss	Permiss
Signal group	1	1	0	1	1	0	1	1	0	1	1	0
Auxiliary Signal Groups												
Lead / Lag	Lag	-	-	Lag	-	-	Lag	-	-	Lag	-	-

Movement, Approach, & Intersection Results

V/C, Movement V/C Ratio	0.04	0.14	0.04	0.06	0.13	0.13	0.02	0.12	0.12	0.07	0.17	0.17
Intersection LOS	A											
Intersection V/C	0.492											

Intersection Level Of Service Report
Intersection 13: Broadway & Maryland Ave

Control Type:	Signalized	Delay (sec / veh):	-
Analysis Method:	ICU 1	Level Of Service:	A
Analysis Period:	15 minutes	Volume to Capacity (v/c):	0.370

Intersection Setup

Name	Maryland Ave			Maryland Ave			Broadway			Broadway		
Approach	Northbound			Southbound			Eastbound			Westbound		
Lane Configuration												
Turning Movement	Left	Thru	Right	Left	Thru	Right	Left	Thru	Right	Left	Thru	Right
Lane Width [ft]	12.00	12.00	12.00	12.00	12.00	12.00	12.00	12.00	12.00	12.00	12.00	12.00
No. of Lanes in Pocket	0	0	0	0	0	0	0	0	0	0	0	0
Pocket Length [ft]	100.00	100.00	100.00	100.00	100.00	100.00	100.00	100.00	100.00	100.00	100.00	100.00
Speed [mph]	30.00			30.00			30.00			30.00		
Grade [%]	0.00			0.00			0.00			0.00		
Crosswalk	Yes			Yes			Yes			Yes		

Volumes

Name	Maryland Ave			Maryland Ave			Broadway			Broadway		
Base Volume Input [veh/h]	20	9	20	9	2	9	28	301	20	34	559	43
Base Volume Adjustment Factor	1.0000	1.0000	1.0000	1.0000	1.0000	1.0000	1.0000	1.0000	1.0000	1.0000	1.0000	1.0000
Heavy Vehicles Percentage [%]	2.00	2.00	2.00	2.00	2.00	2.00	2.00	2.00	2.00	2.00	2.00	2.00
Growth Rate	1.05	1.05	1.05	1.05	1.05	1.05	1.05	1.05	1.05	1.05	1.05	1.05
In-Process Volume [veh/h]	0	0	0	7	0	4	5	67	0	0	64	8
Site-Generated Trips [veh/h]	0	0	0	0	0	0	0	0	0	0	0	0
Diverted Trips [veh/h]	0	0	0	0	0	0	0	0	0	0	0	0
Pass-by Trips [veh/h]	0	0	0	0	0	0	0	0	0	0	0	0
Existing Site Adjustment Volume [veh/h]	0	0	0	0	0	0	0	0	0	0	0	0
Other Volume [veh/h]	0	0	0	0	0	0	0	0	0	0	0	0
Total Hourly Volume [veh/h]	21	9	21	16	2	13	34	383	21	36	651	53
Peak Hour Factor	1.0000	1.0000	1.0000	1.0000	1.0000	1.0000	1.0000	1.0000	1.0000	1.0000	1.0000	1.0000
Other Adjustment Factor	1.0000	1.0000	1.0000	1.0000	1.0000	1.0000	1.0000	1.0000	1.0000	1.0000	1.0000	1.0000
Total 15-Minute Volume [veh/h]	5	2	5	4	1	3	9	96	5	9	163	13
Total Analysis Volume [veh/h]	21	9	21	16	2	13	34	383	21	36	651	53
Pedestrian Volume [ped/h]	0			0			0			0		
Bicycle Volume [bicycles/h]	0			0			0			0		

Intersection Settings

Cycle Length [s]	100
Lost time [s]	10.00

Phasing & Timing

Control Type	Permiss	Permiss	Permiss	Permiss	Permiss	Permiss	Permiss	Permiss	Permiss	Permiss	Permiss	Permiss
Signal group	0	1	0	0	1	0	0	1	0	0	1	0
Auxiliary Signal Groups												
Lead / Lag	-	-	-	-	-	-	-	-	-	-	-	-

Movement, Approach, & Intersection Results

V/C, Movement V/C Ratio	0.01	0.02	0.02	0.01	0.01	0.01	0.02	0.14	0.14	0.02	0.22	0.22
Intersection LOS	A											
Intersection V/C	0.370											

Intersection Level Of Service Report
Intersection 14: Broadway & Louise St

Control Type:	Signalized	Delay (sec / veh):	-
Analysis Method:	ICU 1	Level Of Service:	A
Analysis Period:	15 minutes	Volume to Capacity (v/c):	0.515

Intersection Setup

Name	Louise St			Louise St			Broadway			Broadway		
Approach	Northbound			Southbound			Eastbound			Westbound		
Lane Configuration												
Turning Movement	Left	Thru	Right	Left	Thru	Right	Left	Thru	Right	Left	Thru	Right
Lane Width [ft]	12.00	12.00	12.00	12.00	12.00	12.00	12.00	12.00	12.00	12.00	12.00	12.00
No. of Lanes in Pocket	0	0	0	0	0	0	0	0	0	0	0	0
Pocket Length [ft]	100.00	100.00	100.00	100.00	100.00	100.00	100.00	100.00	100.00	100.00	100.00	100.00
Speed [mph]	30.00			30.00			30.00			30.00		
Grade [%]	0.00			0.00			0.00			0.00		
Crosswalk	Yes			Yes			Yes			Yes		

Volumes

Name	Louise St			Louise St			Broadway			Broadway		
Base Volume Input [veh/h]	26	79	37	39	149	23	29	243	22	27	539	38
Base Volume Adjustment Factor	1.0000	1.0000	1.0000	1.0000	1.0000	1.0000	1.0000	1.0000	1.0000	1.0000	1.0000	1.0000
Heavy Vehicles Percentage [%]	2.00	2.00	2.00	2.00	2.00	2.00	2.00	2.00	2.00	2.00	2.00	2.00
Growth Rate	1.04	1.04	1.04	1.04	1.04	1.04	1.04	1.04	1.04	1.04	1.04	1.04
In-Process Volume [veh/h]	0	1	0	8	2	18	14	60	0	0	54	6
Site-Generated Trips [veh/h]	0	0	0	0	0	0	0	0	0	0	0	0
Diverted Trips [veh/h]	0	0	0	0	0	0	0	0	0	0	0	0
Pass-by Trips [veh/h]	0	0	0	0	0	0	0	0	0	0	0	0
Existing Site Adjustment Volume [veh/h]	0	0	0	0	0	0	0	0	0	0	0	0
Other Volume [veh/h]	0	0	0	0	0	0	0	0	0	0	0	0
Total Hourly Volume [veh/h]	27	83	38	49	157	42	44	313	23	28	615	46
Peak Hour Factor	1.0000	1.0000	1.0000	1.0000	1.0000	1.0000	1.0000	1.0000	1.0000	1.0000	1.0000	1.0000
Other Adjustment Factor	1.0000	1.0000	1.0000	1.0000	1.0000	1.0000	1.0000	1.0000	1.0000	1.0000	1.0000	1.0000
Total 15-Minute Volume [veh/h]	7	21	10	12	39	11	11	78	6	7	154	12
Total Analysis Volume [veh/h]	27	83	38	49	157	42	44	313	23	28	615	46
Pedestrian Volume [ped/h]	0			0			0			0		
Bicycle Volume [bicycles/h]	0			0			0			0		

Intersection Settings

Cycle Length [s]	100
Lost time [s]	10.00

Phasing & Timing

Control Type	Permiss	Permiss	Permiss	Permiss	Permiss	Permiss	Permiss	Permiss	Permiss	Permiss	Permiss	Permiss
Signal group	0	1	0	0	1	0	0	1	0	0	1	0
Auxiliary Signal Groups												
Lead / Lag	-	-	-	-	-	-	-	-	-	-	-	-

Movement, Approach, & Intersection Results

V/C, Movement V/C Ratio	0.02	0.09	0.09	0.03	0.16	0.16	0.03	0.11	0.11	0.02	0.22	0.22
Intersection LOS	A											
Intersection V/C	0.515											

Intersection Level Of Service Report
Intersection 15: Broadway and Kenwood St

Control Type:	Signalized	Delay (sec / veh):	-
Analysis Method:	ICU 1	Level Of Service:	A
Analysis Period:	15 minutes	Volume to Capacity (v/c):	0.411

Intersection Setup

Name	Kenwood St			Kenwood St			Broadway			Broadway		
Approach	Northbound			Southbound			Eastbound			Westbound		
Lane Configuration												
Turning Movement	Left	Thru	Right	Left	Thru	Right	Left	Thru	Right	Left	Thru	Right
Lane Width [ft]	12.00	12.00	12.00	12.00	12.00	12.00	12.00	12.00	12.00	12.00	12.00	12.00
No. of Lanes in Pocket	0	0	0	0	0	0	0	0	0	0	0	0
Pocket Length [ft]	100.00	100.00	100.00	100.00	100.00	100.00	100.00	100.00	100.00	100.00	100.00	100.00
Speed [mph]	30.00			30.00			30.00			30.00		
Grade [%]	0.00			0.00			0.00			0.00		
Crosswalk	Yes			Yes			Yes			Yes		

Volumes

Name	Kenwood St			Kenwood St			Broadway			Broadway		
Base Volume Input [veh/h]	10	33	21	7	42	18	10	250	10	22	645	25
Base Volume Adjustment Factor	1.0000	1.0000	1.0000	1.0000	1.0000	1.0000	1.0000	1.0000	1.0000	1.0000	1.0000	1.0000
Heavy Vehicles Percentage [%]	2.00	2.00	2.00	2.00	2.00	2.00	2.00	2.00	2.00	2.00	2.00	2.00
Growth Rate	1.04	1.04	1.04	1.04	1.04	1.04	1.04	1.04	1.04	1.04	1.04	1.04
In-Process Volume [veh/h]	9	0	9	5	1	8	2	65	1	1	43	1
Site-Generated Trips [veh/h]	0	0	0	0	0	0	0	0	0	0	0	0
Diverted Trips [veh/h]	0	0	0	0	0	0	0	0	0	0	0	0
Pass-by Trips [veh/h]	0	0	0	0	0	0	0	0	0	0	0	0
Existing Site Adjustment Volume [veh/h]	0	0	0	0	0	0	0	0	0	0	0	0
Other Volume [veh/h]	0	0	0	0	0	0	0	0	0	0	0	0
Total Hourly Volume [veh/h]	19	34	31	12	45	27	12	325	11	24	714	27
Peak Hour Factor	1.0000	1.0000	1.0000	1.0000	1.0000	1.0000	1.0000	1.0000	1.0000	1.0000	1.0000	1.0000
Other Adjustment Factor	1.0000	1.0000	1.0000	1.0000	1.0000	1.0000	1.0000	1.0000	1.0000	1.0000	1.0000	1.0000
Total 15-Minute Volume [veh/h]	5	9	8	3	11	7	3	81	3	6	179	7
Total Analysis Volume [veh/h]	19	34	31	12	45	27	12	325	11	24	714	27
Pedestrian Volume [ped/h]	0			0			0			0		
Bicycle Volume [bicycles/h]	0			0			0			0		

Intersection Settings

Cycle Length [s]	100
Lost time [s]	10.00

Phasing & Timing

Control Type	Permiss	Permiss	Permiss	Permiss	Permiss	Permiss	Permiss	Permiss	Permiss	Permiss	Permiss	Permiss
Signal group	0	1	0	0	1	0	0	1	0	0	1	0
Auxiliary Signal Groups												
Lead / Lag	-	-	-	-	-	-	-	-	-	-	-	-

Movement, Approach, & Intersection Results

V/C, Movement V/C Ratio	0.01	0.05	0.05	0.01	0.05	0.05	0.01	0.11	0.11	0.02	0.24	0.24
Intersection LOS	A											
Intersection V/C	0.411											

Intersection Level Of Service Report
Intersection 16: Broadway & Jackon St

Control Type:	Signalized	Delay (sec / veh):	-
Analysis Method:	ICU 1	Level Of Service:	A
Analysis Period:	15 minutes	Volume to Capacity (v/c):	0.441

Intersection Setup

Name	Jackson St			Jackson St			Broadway					
Approach	Northbound			Southbound			Eastbound			Westbound		
Lane Configuration												
Turning Movement	Left	Thru	Right	Left	Thru	Right	Left	Thru	Right	Left	Thru	Right
Lane Width [ft]	12.00	12.00	12.00	12.00	12.00	12.00	12.00	12.00	12.00	12.00	12.00	12.00
No. of Lanes in Pocket	0	0	0	0	0	0	0	0	0	0	0	0
Pocket Length [ft]	100.00	100.00	100.00	100.00	100.00	100.00	100.00	100.00	100.00	100.00	100.00	100.00
Speed [mph]	30.00			30.00			30.00			30.00		
Grade [%]	0.00			0.00			0.00			0.00		
Crosswalk	Yes			Yes			Yes			Yes		

Volumes

Name	Jackson St			Jackson St			Broadway					
Base Volume Input [veh/h]	22	101	25	42	154	30	18	211	11	18	482	34
Base Volume Adjustment Factor	1.0000	1.0000	1.0000	1.0000	1.0000	1.0000	1.0000	1.0000	1.0000	1.0000	1.0000	1.0000
Heavy Vehicles Percentage [%]	2.00	2.00	2.00	2.00	2.00	2.00	2.00	2.00	2.00	2.00	2.00	2.00
Growth Rate	1.04	1.04	1.04	1.04	1.04	1.04	1.04	1.04	1.04	1.04	1.04	1.04
In-Process Volume [veh/h]	0	0	0	0	0	0	0	79	0	0	45	0
Site-Generated Trips [veh/h]	0	0	0	0	0	0	0	0	0	0	0	0
Diverted Trips [veh/h]	0	0	0	0	0	0	0	0	0	0	0	0
Pass-by Trips [veh/h]	0	0	0	0	0	0	0	0	0	0	0	0
Existing Site Adjustment Volume [veh/h]	0	0	0	0	0	0	0	0	0	0	0	0
Other Volume [veh/h]	0	0	0	0	0	0	0	0	0	0	0	0
Total Hourly Volume [veh/h]	23	105	26	44	160	31	19	298	11	19	546	35
Peak Hour Factor	1.0000	1.0000	1.0000	1.0000	1.0000	1.0000	1.0000	1.0000	1.0000	1.0000	1.0000	1.0000
Other Adjustment Factor	1.0000	1.0000	1.0000	1.0000	1.0000	1.0000	1.0000	1.0000	1.0000	1.0000	1.0000	1.0000
Total 15-Minute Volume [veh/h]	6	26	7	11	40	8	5	75	3	5	137	9
Total Analysis Volume [veh/h]	23	105	26	44	160	31	19	298	11	19	546	35
Pedestrian Volume [ped/h]	0			0			0			0		
Bicycle Volume [bicycles/h]	0			0			0			0		

Intersection Settings

Cycle Length [s]	100
Lost time [s]	10.00

Phasing & Timing

Control Type	Permiss	Permiss	Permiss	Permiss	Permiss	Permiss	Permiss	Permiss	Permiss	Permiss	Permiss	Permiss
Signal group	0	1	0	0	1	0	0	1	0	0	1	0
Auxiliary Signal Groups												
Lead / Lag	-	-	-	-	-	-	-	-	-	-	-	-

Movement, Approach, & Intersection Results

V/C, Movement V/C Ratio	0.01	0.10	0.10	0.03	0.13	0.02	0.01	0.10	0.10	0.01	0.19	0.19
Intersection LOS	A											
Intersection V/C	0.441											

Intersection Level Of Service Report
Intersection 1: Brand Blvd & California Ave

Control Type:	Signalized	Delay (sec / veh):	-
Analysis Method:	ICU 1	Level Of Service:	B
Analysis Period:	15 minutes	Volume to Capacity (v/c):	0.626

Intersection Setup

Name	Brand Blvd			Brand Blvd			California Ave			Calfornia Ave		
Approach	Northbound			Southbound			Eastbound			Westbound		
Lane Configuration												
Turning Movement	Left	Thru	Right	Left	Thru	Right	Left	Thru	Right	Left	Thru	Right
Lane Width [ft]	12.00	12.00	12.00	12.00	12.00	12.00	12.00	12.00	12.00	12.00	12.00	12.00
No. of Lanes in Pocket	0	0	0	0	0	0	0	0	0	0	0	0
Pocket Length [ft]	100.00	100.00	100.00	100.00	100.00	100.00	100.00	100.00	100.00	100.00	100.00	100.00
Speed [mph]	30.00			30.00			30.00			30.00		
Grade [%]	0.00			0.00			0.00			0.00		
Crosswalk	Yes			Yes			Yes			Yes		

Volumes

Name	Brand Blvd			Brand Blvd			California Ave			Calfornia Ave		
Base Volume Input [veh/h]	49	450	38	34	613	112	27	138	43	28	168	52
Base Volume Adjustment Factor	1.0000	1.0000	1.0000	1.0000	1.0000	1.0000	1.0000	1.0000	1.0000	1.0000	1.0000	1.0000
Heavy Vehicles Percentage [%]	2.00	2.00	2.00	2.00	2.00	2.00	2.00	2.00	2.00	2.00	2.00	2.00
Growth Rate	1.05	1.05	1.05	1.05	1.05	1.05	1.05	1.05	1.05	1.05	1.05	1.05
In-Process Volume [veh/h]	6	84	8	10	149	3	11	20	13	4	7	9
Site-Generated Trips [veh/h]	0	0	0	-8	0	0	0	-1	0	0	1	7
Diverted Trips [veh/h]	0	0	0	0	0	0	0	0	0	0	0	0
Pass-by Trips [veh/h]	0	0	0	0	0	0	0	0	0	0	0	0
Existing Site Adjustment Volume [veh/h]	0	0	0	0	0	0	0	0	0	0	0	0
Other Volume [veh/h]	0	0	0	0	0	0	0	0	0	0	0	0
Total Hourly Volume [veh/h]	57	557	48	38	793	121	39	164	58	33	184	71
Peak Hour Factor	1.0000	1.0000	1.0000	1.0000	1.0000	1.0000	1.0000	1.0000	1.0000	1.0000	1.0000	1.0000
Other Adjustment Factor	1.0000	1.0000	1.0000	1.0000	1.0000	1.0000	1.0000	1.0000	1.0000	1.0000	1.0000	1.0000
Total 15-Minute Volume [veh/h]	14	139	12	10	198	30	10	41	15	8	46	18
Total Analysis Volume [veh/h]	57	557	48	38	793	121	39	164	58	33	184	71
Pedestrian Volume [ped/h]	0			0			0			0		
Bicycle Volume [bicycles/h]	0			0			0			0		

Intersection Settings

Cycle Length [s]	100
Lost time [s]	10.00

Phasing & Timing

Control Type	Protecte	Permiss	Permiss	Protecte	Permiss	Permiss	Permiss	Permiss	Permiss	Permiss	Permiss	Permiss
Signal group	1	1	0	1	1	0	0	1	0	0	1	0
Auxiliary Signal Groups												
Lead / Lag	Lag	-	-	Lag	-	-	-	-	-	-	-	-

Movement, Approach, & Intersection Results

V/C, Movement V/C Ratio	0.04	0.19	0.19	0.02	0.29	0.29	0.02	0.16	0.16	0.02	0.18	0.18
Intersection LOS	B											
Intersection V/C	0.626											

Intersection Level Of Service Report
Intersection 2: California Ave & Maryland Ave

Control Type:	Signalized	Delay (sec / veh):	-
Analysis Method:	ICU 1	Level Of Service:	A
Analysis Period:	15 minutes	Volume to Capacity (v/c):	0.406

Intersection Setup

Name	Maryland Ave			Maryland Ave			Calfornia Ave			California Ave		
Approach	Northbound			Southbound			Eastbound			Westbound		
Lane Configuration												
Turning Movement	Left	Thru	Right	Left	Thru	Right	Left	Thru	Right	Left	Thru	Right
Lane Width [ft]	12.00	12.00	12.00	12.00	12.00	12.00	12.00	12.00	12.00	12.00	12.00	12.00
No. of Lanes in Pocket	0	0	0	0	0	0	0	0	0	0	0	0
Pocket Length [ft]	100.00	100.00	100.00	100.00	100.00	100.00	100.00	100.00	100.00	100.00	100.00	100.00
Speed [mph]	30.00			30.00			30.00			30.00		
Grade [%]	0.00			0.00			0.00			0.00		
Crosswalk	Yes			Yes			Yes			Yes		

Volumes

Name	Maryland Ave			Maryland Ave			Calfornia Ave			California Ave		
Base Volume Input [veh/h]	12	79	21	10	41	3	12	220	71	31	146	19
Base Volume Adjustment Factor	1.0000	1.0000	1.0000	1.0000	1.0000	1.0000	1.0000	1.0000	1.0000	1.0000	1.0000	1.0000
Heavy Vehicles Percentage [%]	2.00	2.00	2.00	2.00	2.00	2.00	2.00	2.00	2.00	2.00	2.00	2.00
Growth Rate	1.05	1.05	1.05	1.05	1.05	1.05	1.05	1.05	1.05	1.05	1.05	1.05
In-Process Volume [veh/h]	15	6	2	0	6	0	0	17	20	1	4	0
Site-Generated Trips [veh/h]	0	0	0	0	0	0	0	-9	0	0	8	0
Diverted Trips [veh/h]	0	0	0	0	0	0	0	0	0	0	0	0
Pass-by Trips [veh/h]	0	0	0	0	0	0	0	0	0	0	0	0
Existing Site Adjustment Volume [veh/h]	0	0	0	0	0	0	0	0	0	0	0	0
Other Volume [veh/h]	0	0	0	0	0	0	0	0	0	0	0	0
Total Hourly Volume [veh/h]	28	89	24	11	49	3	13	239	95	34	165	20
Peak Hour Factor	1.0000	1.0000	1.0000	1.0000	1.0000	1.0000	1.0000	1.0000	1.0000	1.0000	1.0000	1.0000
Other Adjustment Factor	1.0000	1.0000	1.0000	1.0000	1.0000	1.0000	1.0000	1.0000	1.0000	1.0000	1.0000	1.0000
Total 15-Minute Volume [veh/h]	7	22	6	3	12	1	3	60	24	9	41	5
Total Analysis Volume [veh/h]	28	89	24	11	49	3	13	239	95	34	165	20
Pedestrian Volume [ped/h]	0			0			0			0		
Bicycle Volume [bicycles/h]	0			0			0			0		

Intersection Settings

Cycle Length [s]	100
Lost time [s]	10.00

Phasing & Timing

Control Type	Split	Split	Split	Split	Split	Split	Permiss	Permiss	Permiss	Permiss	Permiss	Permiss
Signal group	0	1	0	0	1	0	0	1	0	0	1	0
Auxiliary Signal Groups												
Lead / Lag	-	-	-	-	-	-	-	-	-	-	-	-

Movement, Approach, & Intersection Results

V/C, Movement V/C Ratio	0.02	0.09	0.09	0.01	0.04	0.04	0.01	0.16	0.06	0.02	0.14	0.14
Intersection LOS	A											
Intersection V/C	0.406											

Intersection Level Of Service Report
Intersection 3: California Ave & Louise St

Control Type:	All-way stop	Delay (sec / veh):	13.3
Analysis Method:	HCM 2010	Level Of Service:	B
Analysis Period:	15 minutes	Volume to Capacity (v/c):	0.525

Intersection Setup

Name	Louise St			Louise St			California Ave			California Ave		
Approach	Northbound			Southbound			Eastbound			Westbound		
Lane Configuration												
Turning Movement	Left	Thru	Right	Left	Thru	Right	Left	Thru	Right	Left	Thru	Right
Lane Width [ft]	12.00	12.00	12.00	12.00	12.00	12.00	12.00	12.00	12.00	12.00	12.00	12.00
No. of Lanes in Pocket	0	0	0	0	0	0	0	0	0	0	0	0
Pocket Length [ft]	100.00	100.00	100.00	100.00	100.00	100.00	100.00	100.00	100.00	100.00	100.00	100.00
Speed [mph]	30.00			30.00			30.00			30.00		
Grade [%]	0.00			0.00			0.00			0.00		
Crosswalk	Yes			Yes			Yes			Yes		

Volumes

Name	Louise St			Louise St			California Ave			California Ave		
Base Volume Input [veh/h]	31	111	13	38	215	36	18	130	14	23	255	32
Base Volume Adjustment Factor	1.0000	1.0000	1.0000	1.0000	1.0000	1.0000	1.0000	1.0000	1.0000	1.0000	1.0000	1.0000
Heavy Vehicles Percentage [%]	2.00	2.00	2.00	2.00	2.00	2.00	2.00	2.00	2.00	2.00	2.00	2.00
Growth Rate	1.04	1.04	1.04	1.04	1.04	1.04	1.04	1.04	1.04	1.04	1.04	1.04
In-Process Volume [veh/h]	2	2	2	0	2	0	0	19	1	1	4	0
Site-Generated Trips [veh/h]	0	0	0	0	0	0	0	-9	0	0	8	0
Diverted Trips [veh/h]	0	0	0	0	0	0	0	0	0	0	0	0
Pass-by Trips [veh/h]	0	0	0	0	0	0	0	0	0	0	0	0
Existing Site Adjustment Volume [veh/h]	0	0	0	0	0	0	0	0	0	0	0	0
Other Volume [veh/h]	0	0	0	0	0	0	0	0	0	0	0	0
Total Hourly Volume [veh/h]	34	117	16	40	226	37	19	145	16	25	277	33
Peak Hour Factor	1.0000	1.0000	1.0000	1.0000	1.0000	1.0000	1.0000	1.0000	1.0000	1.0000	1.0000	1.0000
Other Adjustment Factor	1.0000	1.0000	1.0000	1.0000	1.0000	1.0000	1.0000	1.0000	1.0000	1.0000	1.0000	1.0000
Total 15-Minute Volume [veh/h]	9	29	4	10	57	9	5	36	4	6	69	8
Total Analysis Volume [veh/h]	34	117	16	40	226	37	19	145	16	25	277	33
Pedestrian Volume [ped/h]	0			0			0			0		

Intersection Settings

Lanes

Capacity per Entry Lane [veh/h]	597	628	606	638
Degree of Utilization, x	0.28	0.48	0.30	0.52

Movement, Approach, & Intersection Results

95th-Percentile Queue Length [veh]	1.14	2.62	1.24	3.07
95th-Percentile Queue Length [ft]	28.52	65.62	31.00	76.65
Approach Delay [s/veh]	11.35	13.95	11.44	14.70
Approach LOS	B	B	B	B
Intersection Delay [s/veh]	13.31			
Intersection LOS	B			

Intersection Level Of Service Report
Intersection 4: California Ave & Kenwood St

Control Type:	All-way stop	Delay (sec / veh):	10.5
Analysis Method:	HCM 2010	Level Of Service:	B
Analysis Period:	15 minutes	Volume to Capacity (v/c):	0.451

Intersection Setup

Name	Kenwood St			Kenwood St			California Ave			California Ave		
Approach	Northbound			Southbound			Eastbound			Westbound		
Lane Configuration												
Turning Movement	Left	Thru	Right	Left	Thru	Right	Left	Thru	Right	Left	Thru	Right
Lane Width [ft]	12.00	12.00	12.00	12.00	12.00	12.00	12.00	12.00	12.00	12.00	12.00	12.00
No. of Lanes in Pocket	0	0	0	0	0	0	0	0	0	0	0	0
Pocket Length [ft]	100.00	100.00	100.00	100.00	100.00	100.00	100.00	100.00	100.00	100.00	100.00	100.00
Speed [mph]	30.00			30.00			30.00			30.00		
Grade [%]	0.00			0.00			0.00			0.00		
Crosswalk	Yes			Yes			Yes			Yes		

Volumes

Name	Kenwood St			Kenwood St			California Ave			California Ave		
Base Volume Input [veh/h]	21	42	34	21	71	16	13	136	30	11	291	13
Base Volume Adjustment Factor	1.0000	1.0000	1.0000	1.0000	1.0000	1.0000	1.0000	1.0000	1.0000	1.0000	1.0000	1.0000
Heavy Vehicles Percentage [%]	2.00	2.00	2.00	2.00	2.00	2.00	2.00	2.00	2.00	2.00	2.00	2.00
Growth Rate	1.04	1.04	1.04	1.04	1.04	1.04	1.04	1.04	1.04	1.04	1.04	1.04
In-Process Volume [veh/h]	0	0	0	0	0	0	0	21	0	0	5	0
Site-Generated Trips [veh/h]	0	0	0	0	0	0	0	-9	0	0	8	0
Diverted Trips [veh/h]	0	0	0	0	0	0	0	0	0	0	0	0
Pass-by Trips [veh/h]	0	0	0	0	0	0	0	0	0	0	0	0
Existing Site Adjustment Volume [veh/h]	0	0	0	0	0	0	0	0	0	0	0	0
Other Volume [veh/h]	0	0	0	0	0	0	0	0	0	0	0	0
Total Hourly Volume [veh/h]	22	44	35	22	74	17	14	153	31	11	316	14
Peak Hour Factor	1.0000	1.0000	1.0000	1.0000	1.0000	1.0000	1.0000	1.0000	1.0000	1.0000	1.0000	1.0000
Other Adjustment Factor	1.0000	1.0000	1.0000	1.0000	1.0000	1.0000	1.0000	1.0000	1.0000	1.0000	1.0000	1.0000
Total 15-Minute Volume [veh/h]	6	11	9	6	19	4	4	38	8	3	79	4
Total Analysis Volume [veh/h]	22	44	35	22	74	17	14	153	31	11	316	14
Pedestrian Volume [ped/h]	0			0			0			0		

Intersection Settings

Lanes

Capacity per Entry Lane [veh/h]	683	671	738	756
Degree of Utilization, x	0.15	0.17	0.27	0.45

Movement, Approach, & Intersection Results

95th-Percentile Queue Length [veh]	0.52	0.60	1.08	2.36
95th-Percentile Queue Length [ft]	12.93	15.05	27.08	58.98
Approach Delay [s/veh]	9.19	9.44	9.66	11.62
Approach LOS	A	A	A	B
Intersection Delay [s/veh]	10.45			
Intersection LOS	B			

Intersection Level Of Service Report
Intersection 5: California Ave & Jackson St

Control Type:	All-way stop	Delay (sec / veh):	18.2
Analysis Method:	HCM 2010	Level Of Service:	C
Analysis Period:	15 minutes	Volume to Capacity (v/c):	0.656

Intersection Setup

Name	Jackson St			Jackson St			California Ave			California Ave		
Approach	Northbound			Southbound			Eastbound			Westbound		
Lane Configuration												
Turning Movement	Left	Thru	Right	Left	Thru	Right	Left	Thru	Right	Left	Thru	Right
Lane Width [ft]	12.00	12.00	12.00	12.00	12.00	12.00	12.00	12.00	12.00	12.00	12.00	12.00
No. of Lanes in Pocket	0	0	0	0	0	0	0	0	0	0	0	0
Pocket Length [ft]	100.00	100.00	100.00	100.00	100.00	100.00	100.00	100.00	100.00	100.00	100.00	100.00
Speed [mph]	30.00			30.00			30.00			30.00		
Grade [%]	0.00			0.00			0.00			0.00		
Crosswalk	Yes			Yes			Yes			Yes		

Volumes

Name	Jackson St			Jackson St			California Ave			California Ave		
Base Volume Input [veh/h]	21	145	25	48	289	16	10	164	28	47	261	47
Base Volume Adjustment Factor	1.0000	1.0000	1.0000	1.0000	1.0000	1.0000	1.0000	1.0000	1.0000	1.0000	1.0000	1.0000
Heavy Vehicles Percentage [%]	2.00	2.00	2.00	2.00	2.00	2.00	2.00	2.00	2.00	2.00	2.00	2.00
Growth Rate	1.04	1.04	1.04	1.04	1.04	1.04	1.04	1.04	1.04	1.04	1.04	1.04
In-Process Volume [veh/h]	0	0	0	0	0	0	0	21	0	0	5	0
Site-Generated Trips [veh/h]	8	6	2	0	-8	0	0	0	-9	-2	0	0
Diverted Trips [veh/h]	0	0	0	0	0	0	0	0	0	0	0	0
Pass-by Trips [veh/h]	0	0	0	0	0	0	0	0	0	0	0	0
Existing Site Adjustment Volume [veh/h]	0	0	0	0	0	0	0	0	0	0	0	0
Other Volume [veh/h]	0	0	0	0	0	0	0	0	0	0	0	0
Total Hourly Volume [veh/h]	30	157	28	50	293	17	10	192	20	47	276	49
Peak Hour Factor	1.0000	1.0000	1.0000	1.0000	1.0000	1.0000	1.0000	1.0000	1.0000	1.0000	1.0000	1.0000
Other Adjustment Factor	1.0000	1.0000	1.0000	1.0000	1.0000	1.0000	1.0000	1.0000	1.0000	1.0000	1.0000	1.0000
Total 15-Minute Volume [veh/h]	8	39	7	13	73	4	3	48	5	12	69	12
Total Analysis Volume [veh/h]	30	157	28	50	293	17	10	192	20	47	276	49
Pedestrian Volume [ped/h]	0			0			0			0		

Intersection Settings

Lanes

Capacity per Entry Lane [veh/h]	533	559	535	567
Degree of Utilization, x	0.40	0.64	0.41	0.66

Movement, Approach, & Intersection Results

95th-Percentile Queue Length [veh]	1.94	4.58	2.02	4.79
95th-Percentile Queue Length [ft]	48.39	114.41	50.58	119.69
Approach Delay [s/veh]	14.25	20.32	14.42	20.65
Approach LOS	B	C	B	C
Intersection Delay [s/veh]	18.19			
Intersection LOS	C			

Intersection Level Of Service Report
Intersection 6: Wilson Ave & Brand Blvd

Control Type:	Signalized	Delay (sec / veh):	-
Analysis Method:	ICU 1	Level Of Service:	A
Analysis Period:	15 minutes	Volume to Capacity (v/c):	0.518

Intersection Setup

Name	Brand Blvd			Brand Blvd			Wilson Ave			Wilson Ave		
Approach	Northbound			Southbound			Eastbound			Westbound		
Lane Configuration												
Turning Movement	Left	Thru	Right	Left	Thru	Right	Left	Thru	Right	Left	Thru	Right
Lane Width [ft]	12.00	12.00	12.00	12.00	12.00	12.00	12.00	12.00	12.00	12.00	12.00	12.00
No. of Lanes in Pocket	0	0	0	0	0	0	0	0	0	0	0	0
Pocket Length [ft]	100.00	100.00	100.00	100.00	100.00	100.00	100.00	100.00	100.00	100.00	100.00	100.00
Speed [mph]	30.00			30.00			30.00			30.00		
Grade [%]	0.00			0.00			0.00			0.00		
Crosswalk	Yes			Yes			Yes			Yes		

Volumes

Name	Brand Blvd			Brand Blvd			Wilson Ave			Wilson Ave		
Base Volume Input [veh/h]	43	456	37	66	555	44	18	62	31	63	160	49
Base Volume Adjustment Factor	1.0000	1.0000	1.0000	1.0000	1.0000	1.0000	1.0000	1.0000	1.0000	1.0000	1.0000	1.0000
Heavy Vehicles Percentage [%]	2.00	2.00	2.00	2.00	2.00	2.00	2.00	2.00	2.00	2.00	2.00	2.00
Growth Rate	1.05	1.05	1.05	1.05	1.05	1.05	1.05	1.05	1.05	1.05	1.05	1.05
In-Process Volume [veh/h]	12	63	7	9	141	16	18	12	8	6	11	17
Site-Generated Trips [veh/h]	0	0	-7	0	0	0	0	-2	0	6	2	0
Diverted Trips [veh/h]	0	0	0	0	0	0	0	0	0	0	0	0
Pass-by Trips [veh/h]	0	0	0	0	0	0	0	0	0	0	0	0
Existing Site Adjustment Volume [veh/h]	0	0	0	0	0	0	0	0	0	0	0	0
Other Volume [veh/h]	0	0	0	0	0	0	0	0	0	0	0	0
Total Hourly Volume [veh/h]	57	542	39	78	724	62	37	75	41	78	181	68
Peak Hour Factor	1.0000	1.0000	1.0000	1.0000	1.0000	1.0000	1.0000	1.0000	1.0000	1.0000	1.0000	1.0000
Other Adjustment Factor	1.0000	1.0000	1.0000	1.0000	1.0000	1.0000	1.0000	1.0000	1.0000	1.0000	1.0000	1.0000
Total 15-Minute Volume [veh/h]	14	136	10	20	181	16	9	19	10	20	45	17
Total Analysis Volume [veh/h]	57	542	39	78	724	62	37	75	41	78	181	68
Pedestrian Volume [ped/h]	0			0			0			0		
Bicycle Volume [bicycles/h]	0			0			0			0		

Intersection Settings

Cycle Length [s]	100
Lost time [s]	10.00

Phasing & Timing

Control Type	Protecte	Permiss	Permiss	Protecte	Permiss	Permiss	Permiss	Permiss	Permiss	Permiss	Permiss	Permiss
Signal group	1	1	0	1	1	0	0	1	0	0	1	0
Auxiliary Signal Groups												
Lead / Lag	Lag	-	-	Lag	-	-	-	-	-	-	-	-

Movement, Approach, & Intersection Results

V/C, Movement V/C Ratio	0.04	0.18	0.18	0.05	0.25	0.25	0.02	0.05	0.03	0.05	0.11	0.04
Intersection LOS	A											
Intersection V/C	0.518											

Intersection Level Of Service Report
Intersection 7: Wilson Ave & Maryland Ave

Control Type:	Signalized	Delay (sec / veh):	-
Analysis Method:	ICU 1	Level Of Service:	A
Analysis Period:	15 minutes	Volume to Capacity (v/c):	0.403

Intersection Setup

Name	Maryland Ave			Maryland Ave			Wilson Ave			Wilson Ave		
Approach	Northbound			Southbound			Eastbound			Westbound		
Lane Configuration												
Turning Movement	Left	Thru	Right	Left	Thru	Right	Left	Thru	Right	Left	Thru	Right
Lane Width [ft]	12.00	12.00	12.00	12.00	12.00	12.00	12.00	12.00	12.00	12.00	12.00	12.00
No. of Lanes in Pocket	0	0	0	0	0	0	0	0	0	0	0	0
Pocket Length [ft]	100.00	100.00	100.00	100.00	100.00	100.00	100.00	100.00	100.00	100.00	100.00	100.00
Speed [mph]	30.00			30.00			30.00			30.00		
Grade [%]	0.00			0.00			0.00			0.00		
Crosswalk	Yes			Yes			Yes			Yes		

Volumes

Name	Maryland Ave			Maryland Ave			Wilson Ave			Wilson Ave		
Base Volume Input [veh/h]	10	1	13	36	28	35	16	93	52	42	259	61
Base Volume Adjustment Factor	1.0000	1.0000	1.0000	1.0000	1.0000	1.0000	1.0000	1.0000	1.0000	1.0000	1.0000	1.0000
Heavy Vehicles Percentage [%]	2.00	2.00	2.00	2.00	2.00	2.00	2.00	2.00	2.00	2.00	2.00	2.00
Growth Rate	1.05	1.05	1.05	1.05	1.05	1.05	1.05	1.05	1.05	1.05	1.05	1.05
In-Process Volume [veh/h]	0	12	0	1	10	4	8	20	1	0	24	1
Site-Generated Trips [veh/h]	0	0	0	0	0	0	0	-9	0	0	8	0
Diverted Trips [veh/h]	0	0	0	0	0	0	0	0	0	0	0	0
Pass-by Trips [veh/h]	0	0	0	0	0	0	0	0	0	0	0	0
Existing Site Adjustment Volume [veh/h]	0	0	0	0	0	0	0	0	0	0	0	0
Other Volume [veh/h]	0	0	0	0	0	0	0	0	0	0	0	0
Total Hourly Volume [veh/h]	11	13	14	39	39	41	25	109	56	44	304	65
Peak Hour Factor	1.0000	1.0000	1.0000	1.0000	1.0000	1.0000	1.0000	1.0000	1.0000	1.0000	1.0000	1.0000
Other Adjustment Factor	1.0000	1.0000	1.0000	1.0000	1.0000	1.0000	1.0000	1.0000	1.0000	1.0000	1.0000	1.0000
Total 15-Minute Volume [veh/h]	3	3	4	10	10	10	6	27	14	11	76	16
Total Analysis Volume [veh/h]	11	13	14	39	39	41	25	109	56	44	304	65
Pedestrian Volume [ped/h]	0			0			0			0		
Bicycle Volume [bicycles/h]	0			0			0			0		

Intersection Settings

Cycle Length [s]	100
Lost time [s]	10.00

Phasing & Timing

Control Type	Permiss	Permiss	Permiss	Permiss	Permiss	Permiss	Permiss	Permiss	Permiss	Permiss	Permiss	Permiss
Signal group	0	1	0	0	1	0	0	1	0	0	1	0
Auxiliary Signal Groups												
Lead / Lag	-	-	-	-	-	-	-	-	-	-	-	-

Movement, Approach, & Intersection Results

V/C, Movement V/C Ratio	0.01	0.02	0.02	0.02	0.05	0.05	0.02	0.10	0.10	0.03	0.23	0.23
Intersection LOS	A											
Intersection V/C	0.403											

Intersection Level Of Service Report
Intersection 8: Wilson Ave & Louise St

Control Type:	Signalized	Delay (sec / veh):	-
Analysis Method:	ICU 1	Level Of Service:	A
Analysis Period:	15 minutes	Volume to Capacity (v/c):	0.541

Intersection Setup

Name	Louise St			Louise St			Wilson Ave			Wilson Ave		
Approach	Northbound			Southbound			Eastbound			Westbound		
Lane Configuration												
Turning Movement	Left	Thru	Right	Left	Thru	Right	Left	Thru	Right	Left	Thru	Right
Lane Width [ft]	12.00	12.00	12.00	12.00	12.00	12.00	12.00	12.00	12.00	12.00	12.00	12.00
No. of Lanes in Pocket	0	0	0	0	0	0	0	0	0	0	0	0
Pocket Length [ft]	100.00	100.00	100.00	100.00	100.00	100.00	100.00	100.00	100.00	100.00	100.00	100.00
Speed [mph]	30.00			30.00			30.00			30.00		
Grade [%]	0.00			0.00			0.00			0.00		
Crosswalk	Yes			Yes			Yes			Yes		

Volumes

Name	Louise St			Louise St			Wilson Ave			Wilson Ave		
Base Volume Input [veh/h]	27	90	56	57	172	30	6	158	34	33	305	46
Base Volume Adjustment Factor	1.0000	1.0000	1.0000	1.0000	1.0000	1.0000	1.0000	1.0000	1.0000	1.0000	1.0000	1.0000
Heavy Vehicles Percentage [%]	2.00	2.00	2.00	2.00	2.00	2.00	2.00	2.00	2.00	2.00	2.00	2.00
Growth Rate	1.04	1.04	1.04	1.04	1.04	1.04	1.04	1.04	1.04	1.04	1.04	1.04
In-Process Volume [veh/h]	15	6	2	0	4	0	0	11	10	2	10	0
Site-Generated Trips [veh/h]	0	0	0	0	0	0	0	-9	0	0	8	0
Diverted Trips [veh/h]	0	0	0	0	0	0	0	0	0	0	0	0
Pass-by Trips [veh/h]	0	0	0	0	0	0	0	0	0	0	0	0
Existing Site Adjustment Volume [veh/h]	0	0	0	0	0	0	0	0	0	0	0	0
Other Volume [veh/h]	0	0	0	0	0	0	0	0	0	0	0	0
Total Hourly Volume [veh/h]	43	100	60	59	183	31	6	166	45	36	335	48
Peak Hour Factor	1.0000	1.0000	1.0000	1.0000	1.0000	1.0000	1.0000	1.0000	1.0000	1.0000	1.0000	1.0000
Other Adjustment Factor	1.0000	1.0000	1.0000	1.0000	1.0000	1.0000	1.0000	1.0000	1.0000	1.0000	1.0000	1.0000
Total 15-Minute Volume [veh/h]	11	25	15	15	46	8	2	42	11	9	84	12
Total Analysis Volume [veh/h]	43	100	60	59	183	31	6	166	45	36	335	48
Pedestrian Volume [ped/h]	0			0			0			0		
Bicycle Volume [bicycles/h]	0			0			0			0		

Intersection Settings

Cycle Length [s]	100
Lost time [s]	10.00

Phasing & Timing

Control Type	Permiss	Permiss	Permiss	Permiss	Permiss	Permiss	Permiss	Permiss	Permiss	Permiss	Permiss	Permiss
Signal group	0	1	0	0	1	0	0	1	0	0	1	0
Auxiliary Signal Groups												
Lead / Lag	-	-	-	-	-	-	-	-	-	-	-	-

Movement, Approach, & Intersection Results

V/C, Movement V/C Ratio	0.03	0.13	0.13	0.04	0.17	0.17	0.00	0.13	0.13	0.02	0.24	0.24
Intersection LOS	A											
Intersection V/C	0.541											

Intersection Level Of Service Report
Intersection 9: Wilson Ave & Kenwood St

Control Type:	Signalized	Delay (sec / veh):	-
Analysis Method:	ICU 1	Level Of Service:	A
Analysis Period:	15 minutes	Volume to Capacity (v/c):	0.441

Intersection Setup

Name	Kenwood St			Kenwood St			Wilson Ave			Wilson Ave		
Approach	Northbound			Southbound			Eastbound			Westbound		
Lane Configuration												
Turning Movement	Left	Thru	Right	Left	Thru	Right	Left	Thru	Right	Left	Thru	Right
Lane Width [ft]	12.00	12.00	12.00	12.00	12.00	12.00	12.00	12.00	12.00	12.00	12.00	12.00
No. of Lanes in Pocket	0	0	0	0	0	0	0	0	0	0	0	0
Pocket Length [ft]	100.00	100.00	100.00	100.00	100.00	100.00	100.00	100.00	100.00	100.00	100.00	100.00
Speed [mph]	30.00			30.00			30.00			30.00		
Grade [%]	0.00			0.00			0.00			0.00		
Crosswalk	Yes			Yes			Yes			Yes		

Volumes

Name	Kenwood St			Kenwood St			Wilson Ave			Wilson Ave		
Base Volume Input [veh/h]	14	60	16	21	55	17	13	209	52	26	317	29
Base Volume Adjustment Factor	1.0000	1.0000	1.0000	1.0000	1.0000	1.0000	1.0000	1.0000	1.0000	1.0000	1.0000	1.0000
Heavy Vehicles Percentage [%]	2.00	2.00	2.00	2.00	2.00	2.00	2.00	2.00	2.00	2.00	2.00	2.00
Growth Rate	1.04	1.04	1.04	1.04	1.04	1.04	1.04	1.04	1.04	1.04	1.04	1.04
In-Process Volume [veh/h]	8	2	5	0	0	0	0	10	3	1	4	0
Site-Generated Trips [veh/h]	0	0	0	0	0	0	0	-9	0	0	8	0
Diverted Trips [veh/h]	0	0	0	0	0	0	0	0	0	0	0	0
Pass-by Trips [veh/h]	0	0	0	0	0	0	0	0	0	0	0	0
Existing Site Adjustment Volume [veh/h]	0	0	0	0	0	0	0	0	0	0	0	0
Other Volume [veh/h]	0	0	0	0	0	0	0	0	0	0	0	0
Total Hourly Volume [veh/h]	23	64	22	22	57	18	14	218	57	28	342	30
Peak Hour Factor	1.0000	1.0000	1.0000	1.0000	1.0000	1.0000	1.0000	1.0000	1.0000	1.0000	1.0000	1.0000
Other Adjustment Factor	1.0000	1.0000	1.0000	1.0000	1.0000	1.0000	1.0000	1.0000	1.0000	1.0000	1.0000	1.0000
Total 15-Minute Volume [veh/h]	6	16	6	6	14	5	4	55	14	7	86	8
Total Analysis Volume [veh/h]	23	64	22	22	57	18	14	218	57	28	342	30
Pedestrian Volume [ped/h]	0			0			0			0		
Bicycle Volume [bicycles/h]	0			0			0			0		

Intersection Settings

Cycle Length [s]	100
Lost time [s]	10.00

Phasing & Timing

Control Type	Permiss	Permiss	Permiss	Permiss	Permiss	Permiss	Permiss	Permiss	Permiss	Permiss	Permiss	Permiss
Signal group	0	1	0	0	1	0	0	1	0	0	1	0
Auxiliary Signal Groups												
Lead / Lag	-	-	-	-	-	-	-	-	-	-	-	-

Movement, Approach, & Intersection Results

V/C, Movement V/C Ratio	0.01	0.07	0.07	0.01	0.06	0.06	0.01	0.18	0.18	0.02	0.25	0.25
Intersection LOS	A											
Intersection V/C	0.441											

Intersection Level Of Service Report
Intersection 10: Wilson Ave & Jackson St

Control Type:	Signalized	Delay (sec / veh):	-
Analysis Method:	ICU 1	Level Of Service:	A
Analysis Period:	15 minutes	Volume to Capacity (v/c):	0.543

Intersection Setup

Name	Jackson St			Jackson St			Wilson Ave			Wilson Ave		
Approach	Northbound			Southbound			Eastbound			Westbound		
Lane Configuration												
Turning Movement	Left	Thru	Right	Left	Thru	Right	Left	Thru	Right	Left	Thru	Right
Lane Width [ft]	12.00	12.00	12.00	12.00	12.00	12.00	12.00	12.00	12.00	12.00	12.00	12.00
No. of Lanes in Pocket	0	0	0	0	0	0	0	0	0	0	0	0
Pocket Length [ft]	100.00	100.00	100.00	100.00	100.00	100.00	100.00	100.00	100.00	100.00	100.00	100.00
Speed [mph]	30.00			30.00			30.00			30.00		
Grade [%]	0.00			0.00			0.00			0.00		
Crosswalk	Yes			Yes			Yes			Yes		

Volumes

Name	Jackson St			Jackson St			Wilson Ave			Wilson Ave		
Base Volume Input [veh/h]	13	118	18	51	193	12	7	177	28	42	379	72
Base Volume Adjustment Factor	1.0000	1.0000	1.0000	1.0000	1.0000	1.0000	1.0000	1.0000	1.0000	1.0000	1.0000	1.0000
Heavy Vehicles Percentage [%]	2.00	2.00	2.00	2.00	2.00	2.00	2.00	2.00	2.00	2.00	2.00	2.00
Growth Rate	1.04	1.04	1.04	1.04	1.04	1.04	1.04	1.04	1.04	1.04	1.04	1.04
In-Process Volume [veh/h]	0	0	0	0	0	0	0	15	0	0	5	0
Site-Generated Trips [veh/h]	0	-6	0	5	6	8	-9	0	0	0	0	-6
Diverted Trips [veh/h]	0	0	0	0	0	0	0	0	0	0	0	0
Pass-by Trips [veh/h]	0	0	0	0	0	0	0	0	0	0	0	0
Existing Site Adjustment Volume [veh/h]	0	0	0	0	0	0	0	0	0	0	0	0
Other Volume [veh/h]	0	0	0	0	0	0	0	0	0	0	0	0
Total Hourly Volume [veh/h]	14	117	19	58	207	20	0	199	29	44	399	69
Peak Hour Factor	1.0000	1.0000	1.0000	1.0000	1.0000	1.0000	1.0000	1.0000	1.0000	1.0000	1.0000	1.0000
Other Adjustment Factor	1.0000	1.0000	1.0000	1.0000	1.0000	1.0000	1.0000	1.0000	1.0000	1.0000	1.0000	1.0000
Total 15-Minute Volume [veh/h]	4	29	5	15	52	5	0	50	7	11	100	17
Total Analysis Volume [veh/h]	14	117	19	58	207	20	0	199	29	44	399	69
Pedestrian Volume [ped/h]	0			0			0			0		
Bicycle Volume [bicycles/h]	0			0			0			0		

Intersection Settings

Cycle Length [s]	100
Lost time [s]	10.00

Phasing & Timing

Control Type	Permiss	Permiss	Permiss	Permiss	Permiss	Permiss	Permiss	Permiss	Permiss	Permiss	Permiss	Permiss
Signal group	0	1	0	0	1	0	0	1	0	0	1	0
Auxiliary Signal Groups												
Lead / Lag	-	-	-	-	-	-	-	-	-	-	-	-

Movement, Approach, & Intersection Results

V/C, Movement V/C Ratio	0.01	0.09	0.09	0.04	0.14	0.14	0.00	0.14	0.14	0.03	0.29	0.29
Intersection LOS	A											
Intersection V/C	0.543											

Intersection Level Of Service Report
Intersection 11: Wilson Ave & Glendale Ave

Control Type:	Signalized	Delay (sec / veh):	-
Analysis Method:	ICU 1	Level Of Service:	C
Analysis Period:	15 minutes	Volume to Capacity (v/c):	0.743

Intersection Setup

Name							Wilson Ave			Wilson Ave		
Approach	Northbound			Southbound			Eastbound			Westbound		
Lane Configuration												
Turning Movement	Left	Thru	Right	Left	Thru	Right	Left	Thru	Right	Left	Thru	Right
Lane Width [ft]	12.00	12.00	12.00	12.00	12.00	12.00	12.00	12.00	12.00	12.00	12.00	12.00
No. of Lanes in Pocket	0	0	0	0	0	0	0	0	0	0	0	0
Pocket Length [ft]	100.00	100.00	100.00	100.00	100.00	100.00	100.00	100.00	100.00	100.00	100.00	100.00
Speed [mph]	30.00			30.00			30.00			30.00		
Grade [%]	0.00			0.00			0.00			0.00		
Crosswalk	Yes			Yes			Yes			Yes		

Volumes

Name							Wilson Ave			Wilson Ave		
Base Volume Input [veh/h]	73	494	17	59	743	150	55	105	44	106	417	63
Base Volume Adjustment Factor	1.0000	1.0000	1.0000	1.0000	1.0000	1.0000	1.0000	1.0000	1.0000	1.0000	1.0000	1.0000
Heavy Vehicles Percentage [%]	2.00	2.00	2.00	2.00	2.00	2.00	2.00	2.00	2.00	2.00	2.00	2.00
Growth Rate	1.04	1.04	1.04	1.04	1.04	1.04	1.04	1.04	1.04	1.04	1.04	1.04
In-Process Volume [veh/h]	1	10	0	0	12	1	4	10	1	0	3	0
Site-Generated Trips [veh/h]	0	0	0	0	0	-1	1	4	0	0	-5	0
Diverted Trips [veh/h]	0	0	0	0	0	0	0	0	0	0	0	0
Pass-by Trips [veh/h]	0	0	0	0	0	0	0	0	0	0	0	0
Existing Site Adjustment Volume [veh/h]	0	0	0	0	0	0	0	0	0	0	0	0
Other Volume [veh/h]	0	0	0	0	0	0	0	0	0	0	0	0
Total Hourly Volume [veh/h]	77	524	18	61	785	156	62	123	47	110	432	66
Peak Hour Factor	1.0000	1.0000	1.0000	1.0000	1.0000	1.0000	1.0000	1.0000	1.0000	1.0000	1.0000	1.0000
Other Adjustment Factor	1.0000	1.0000	1.0000	1.0000	1.0000	1.0000	1.0000	1.0000	1.0000	1.0000	1.0000	1.0000
Total 15-Minute Volume [veh/h]	19	131	5	15	196	39	16	31	12	28	108	17
Total Analysis Volume [veh/h]	77	524	18	61	785	156	62	123	47	110	432	66
Pedestrian Volume [ped/h]	0			0			0			0		
Bicycle Volume [bicycles/h]	0			0			0			0		

Intersection Settings

Cycle Length [s]	100
Lost time [s]	10.00

Phasing & Timing

Control Type	Protecte	Permiss	Permiss	Protecte	Permiss	Permiss	Protecte	Permiss	Permiss	Protecte	Permiss	Permiss
Signal group	1	1	0	1	1	0	1	1	0	1	1	0
Auxiliary Signal Groups												
Lead / Lag	Lag	-	-	Lag	-	-	Lag	-	-	Lag	-	-

Movement, Approach, & Intersection Results

V/C, Movement V/C Ratio	0.05	0.17	0.17	0.04	0.25	0.10	0.04	0.08	0.03	0.07	0.31	0.31
Intersection LOS	C											
Intersection V/C	0.743											

Intersection Level Of Service Report
Intersection 12: Broadway & Brand Blvd

Control Type:	Signalized	Delay (sec / veh):	-
Analysis Method:	ICU 1	Level Of Service:	A
Analysis Period:	15 minutes	Volume to Capacity (v/c):	0.488

Intersection Setup

Name	Brand Blvd			Brand Blvd			Broadway			Broadway		
Approach	Northbound			Southbound			Eastbound			Westbound		
Lane Configuration												
Turning Movement	Left	Thru	Right	Left	Thru	Right	Left	Thru	Right	Left	Thru	Right
Lane Width [ft]	12.00	12.00	12.00	12.00	12.00	12.00	12.00	12.00	12.00	12.00	12.00	12.00
No. of Lanes in Pocket	0	0	0	0	0	0	0	0	0	0	0	0
Pocket Length [ft]	100.00	100.00	100.00	100.00	100.00	100.00	100.00	100.00	100.00	100.00	100.00	100.00
Speed [mph]	30.00			30.00			30.00			30.00		
Grade [%]	0.00			0.00			0.00			0.00		
Crosswalk	Yes			Yes			Yes			Yes		

Volumes

Name	Brand Blvd			Brand Blvd			Broadway			Broadway		
Base Volume Input [veh/h]	64	368	45	88	396	62	29	263	51	90	373	90
Base Volume Adjustment Factor	1.0000	1.0000	1.0000	1.0000	1.0000	1.0000	1.0000	1.0000	1.0000	1.0000	1.0000	1.0000
Heavy Vehicles Percentage [%]	2.00	2.00	2.00	2.00	2.00	2.00	2.00	2.00	2.00	2.00	2.00	2.00
Growth Rate	1.05	1.05	1.05	1.05	1.05	1.05	1.05	1.05	1.05	1.05	1.05	1.05
In-Process Volume [veh/h]	4	62	12	2	146	3	1	54	9	17	44	6
Site-Generated Trips [veh/h]	0	-7	0	0	6	0	0	-3	0	0	3	0
Diverted Trips [veh/h]	0	0	0	0	0	0	0	0	0	0	0	0
Pass-by Trips [veh/h]	0	0	0	0	0	0	0	0	0	0	0	0
Existing Site Adjustment Volume [veh/h]	0	0	0	0	0	0	0	0	0	0	0	0
Other Volume [veh/h]	0	0	0	0	0	0	0	0	0	0	0	0
Total Hourly Volume [veh/h]	71	441	59	94	568	68	31	327	63	112	439	101
Peak Hour Factor	1.0000	1.0000	1.0000	1.0000	1.0000	1.0000	1.0000	1.0000	1.0000	1.0000	1.0000	1.0000
Other Adjustment Factor	1.0000	1.0000	1.0000	1.0000	1.0000	1.0000	1.0000	1.0000	1.0000	1.0000	1.0000	1.0000
Total 15-Minute Volume [veh/h]	18	110	15	24	142	17	8	82	16	28	110	25
Total Analysis Volume [veh/h]	71	441	59	94	568	68	31	327	63	112	439	101
Pedestrian Volume [ped/h]	0			0			0			0		
Bicycle Volume [bicycles/h]	0			0			0			0		

Intersection Settings

Cycle Length [s]	100
Lost time [s]	10.00

Phasing & Timing

Control Type	Protecte	Permiss	Permiss	Protecte	Permiss	Permiss	Protecte	Permiss	Permiss	Protecte	Permiss	Permiss
Signal group	1	1	0	1	1	0	1	1	0	1	1	0
Auxiliary Signal Groups												
Lead / Lag	Lag	-	-	Lag	-	-	Lag	-	-	Lag	-	-

Movement, Approach, & Intersection Results

V/C, Movement V/C Ratio	0.04	0.14	0.04	0.06	0.13	0.13	0.02	0.12	0.12	0.07	0.17	0.17
Intersection LOS	A											
Intersection V/C	0.488											

Intersection Level Of Service Report
Intersection 13: Broadway & Maryland Ave

Control Type:	Signalized	Delay (sec / veh):	-
Analysis Method:	ICU 1	Level Of Service:	A
Analysis Period:	15 minutes	Volume to Capacity (v/c):	0.371

Intersection Setup

Name	Maryland Ave			Maryland Ave			Broadway			Broadway		
Approach	Northbound			Southbound			Eastbound			Westbound		
Lane Configuration												
Turning Movement	Left	Thru	Right	Left	Thru	Right	Left	Thru	Right	Left	Thru	Right
Lane Width [ft]	12.00	12.00	12.00	12.00	12.00	12.00	12.00	12.00	12.00	12.00	12.00	12.00
No. of Lanes in Pocket	0	0	0	0	0	0	0	0	0	0	0	0
Pocket Length [ft]	100.00	100.00	100.00	100.00	100.00	100.00	100.00	100.00	100.00	100.00	100.00	100.00
Speed [mph]	30.00			30.00			30.00			30.00		
Grade [%]	0.00			0.00			0.00			0.00		
Crosswalk	Yes			Yes			Yes			Yes		

Volumes

Name	Maryland Ave			Maryland Ave			Broadway			Broadway		
Base Volume Input [veh/h]	20	9	20	9	2	9	28	301	20	34	559	43
Base Volume Adjustment Factor	1.0000	1.0000	1.0000	1.0000	1.0000	1.0000	1.0000	1.0000	1.0000	1.0000	1.0000	1.0000
Heavy Vehicles Percentage [%]	2.00	2.00	2.00	2.00	2.00	2.00	2.00	2.00	2.00	2.00	2.00	2.00
Growth Rate	1.05	1.05	1.05	1.05	1.05	1.05	1.05	1.05	1.05	1.05	1.05	1.05
In-Process Volume [veh/h]	0	0	0	7	0	4	5	67	0	0	64	8
Site-Generated Trips [veh/h]	0	0	0	0	0	0	0	-3	0	0	3	0
Diverted Trips [veh/h]	0	0	0	0	0	0	0	0	0	0	0	0
Pass-by Trips [veh/h]	0	0	0	0	0	0	0	0	0	0	0	0
Existing Site Adjustment Volume [veh/h]	0	0	0	0	0	0	0	0	0	0	0	0
Other Volume [veh/h]	0	0	0	0	0	0	0	0	0	0	0	0
Total Hourly Volume [veh/h]	21	9	21	16	2	13	34	380	21	36	654	53
Peak Hour Factor	1.0000	1.0000	1.0000	1.0000	1.0000	1.0000	1.0000	1.0000	1.0000	1.0000	1.0000	1.0000
Other Adjustment Factor	1.0000	1.0000	1.0000	1.0000	1.0000	1.0000	1.0000	1.0000	1.0000	1.0000	1.0000	1.0000
Total 15-Minute Volume [veh/h]	5	2	5	4	1	3	9	95	5	9	164	13
Total Analysis Volume [veh/h]	21	9	21	16	2	13	34	380	21	36	654	53
Pedestrian Volume [ped/h]	0			0			0			0		
Bicycle Volume [bicycles/h]	0			0			0			0		

Intersection Settings

Cycle Length [s]	100
Lost time [s]	10.00

Phasing & Timing

Control Type	Permiss	Permiss	Permiss	Permiss	Permiss	Permiss	Permiss	Permiss	Permiss	Permiss	Permiss	Permiss
Signal group	0	1	0	0	1	0	0	1	0	0	1	0
Auxiliary Signal Groups												
Lead / Lag	-	-	-	-	-	-	-	-	-	-	-	-

Movement, Approach, & Intersection Results

V/C, Movement V/C Ratio	0.01	0.02	0.02	0.01	0.01	0.01	0.02	0.14	0.14	0.02	0.22	0.22
Intersection LOS	A											
Intersection V/C	0.371											

Intersection Level Of Service Report
Intersection 14: Broadway & Louise St

Control Type:	Signalized	Delay (sec / veh):	-
Analysis Method:	ICU 1	Level Of Service:	A
Analysis Period:	15 minutes	Volume to Capacity (v/c):	0.516

Intersection Setup

Name	Louise St			Louise St			Broadway			Broadway		
Approach	Northbound			Southbound			Eastbound			Westbound		
Lane Configuration												
Turning Movement	Left	Thru	Right	Left	Thru	Right	Left	Thru	Right	Left	Thru	Right
Lane Width [ft]	12.00	12.00	12.00	12.00	12.00	12.00	12.00	12.00	12.00	12.00	12.00	12.00
No. of Lanes in Pocket	0	0	0	0	0	0	0	0	0	0	0	0
Pocket Length [ft]	100.00	100.00	100.00	100.00	100.00	100.00	100.00	100.00	100.00	100.00	100.00	100.00
Speed [mph]	30.00			30.00			30.00			30.00		
Grade [%]	0.00			0.00			0.00			0.00		
Crosswalk	Yes			Yes			Yes			Yes		

Volumes

Name	Louise St			Louise St			Broadway			Broadway		
Base Volume Input [veh/h]	26	79	37	39	149	23	29	243	22	27	539	38
Base Volume Adjustment Factor	1.0000	1.0000	1.0000	1.0000	1.0000	1.0000	1.0000	1.0000	1.0000	1.0000	1.0000	1.0000
Heavy Vehicles Percentage [%]	2.00	2.00	2.00	2.00	2.00	2.00	2.00	2.00	2.00	2.00	2.00	2.00
Growth Rate	1.04	1.04	1.04	1.04	1.04	1.04	1.04	1.04	1.04	1.04	1.04	1.04
In-Process Volume [veh/h]	0	1	0	8	2	18	14	60	0	0	54	6
Site-Generated Trips [veh/h]	0	0	0	0	0	0	0	-3	0	0	3	0
Diverted Trips [veh/h]	0	0	0	0	0	0	0	0	0	0	0	0
Pass-by Trips [veh/h]	0	0	0	0	0	0	0	0	0	0	0	0
Existing Site Adjustment Volume [veh/h]	0	0	0	0	0	0	0	0	0	0	0	0
Other Volume [veh/h]	0	0	0	0	0	0	0	0	0	0	0	0
Total Hourly Volume [veh/h]	27	83	38	49	157	42	44	310	23	28	618	46
Peak Hour Factor	1.0000	1.0000	1.0000	1.0000	1.0000	1.0000	1.0000	1.0000	1.0000	1.0000	1.0000	1.0000
Other Adjustment Factor	1.0000	1.0000	1.0000	1.0000	1.0000	1.0000	1.0000	1.0000	1.0000	1.0000	1.0000	1.0000
Total 15-Minute Volume [veh/h]	7	21	10	12	39	11	11	78	6	7	155	12
Total Analysis Volume [veh/h]	27	83	38	49	157	42	44	310	23	28	618	46
Pedestrian Volume [ped/h]	0			0			0			0		
Bicycle Volume [bicycles/h]	0			0			0			0		

Intersection Settings

Cycle Length [s]	100
Lost time [s]	10.00

Phasing & Timing

Control Type	Permiss	Permiss	Permiss	Permiss	Permiss	Permiss	Permiss	Permiss	Permiss	Permiss	Permiss	Permiss
Signal group	0	1	0	0	1	0	0	1	0	0	1	0
Auxiliary Signal Groups												
Lead / Lag	-	-	-	-	-	-	-	-	-	-	-	-

Movement, Approach, & Intersection Results

V/C, Movement V/C Ratio	0.02	0.09	0.09	0.03	0.16	0.16	0.03	0.10	0.10	0.02	0.22	0.22
Intersection LOS	A											
Intersection V/C	0.516											

Intersection Level Of Service Report
Intersection 15: Broadway and Kenwood St

Control Type:	Signalized	Delay (sec / veh):	-
Analysis Method:	ICU 1	Level Of Service:	A
Analysis Period:	15 minutes	Volume to Capacity (v/c):	0.412

Intersection Setup

Name	Kenwood St			Kenwood St			Broadway			Broadway		
Approach	Northbound			Southbound			Eastbound			Westbound		
Lane Configuration												
Turning Movement	Left	Thru	Right	Left	Thru	Right	Left	Thru	Right	Left	Thru	Right
Lane Width [ft]	12.00	12.00	12.00	12.00	12.00	12.00	12.00	12.00	12.00	12.00	12.00	12.00
No. of Lanes in Pocket	0	0	0	0	0	0	0	0	0	0	0	0
Pocket Length [ft]	100.00	100.00	100.00	100.00	100.00	100.00	100.00	100.00	100.00	100.00	100.00	100.00
Speed [mph]	30.00			30.00			30.00			30.00		
Grade [%]	0.00			0.00			0.00			0.00		
Crosswalk	Yes			Yes			Yes			Yes		

Volumes

Name	Kenwood St			Kenwood St			Broadway			Broadway		
Base Volume Input [veh/h]	10	33	21	7	42	18	10	250	10	22	645	25
Base Volume Adjustment Factor	1.0000	1.0000	1.0000	1.0000	1.0000	1.0000	1.0000	1.0000	1.0000	1.0000	1.0000	1.0000
Heavy Vehicles Percentage [%]	2.00	2.00	2.00	2.00	2.00	2.00	2.00	2.00	2.00	2.00	2.00	2.00
Growth Rate	1.04	1.04	1.04	1.04	1.04	1.04	1.04	1.04	1.04	1.04	1.04	1.04
In-Process Volume [veh/h]	9	0	9	5	1	8	2	65	1	1	43	1
Site-Generated Trips [veh/h]	0	0	0	0	0	0	0	-3	0	0	3	0
Diverted Trips [veh/h]	0	0	0	0	0	0	0	0	0	0	0	0
Pass-by Trips [veh/h]	0	0	0	0	0	0	0	0	0	0	0	0
Existing Site Adjustment Volume [veh/h]	0	0	0	0	0	0	0	0	0	0	0	0
Other Volume [veh/h]	0	0	0	0	0	0	0	0	0	0	0	0
Total Hourly Volume [veh/h]	19	34	31	12	45	27	12	322	11	24	717	27
Peak Hour Factor	1.0000	1.0000	1.0000	1.0000	1.0000	1.0000	1.0000	1.0000	1.0000	1.0000	1.0000	1.0000
Other Adjustment Factor	1.0000	1.0000	1.0000	1.0000	1.0000	1.0000	1.0000	1.0000	1.0000	1.0000	1.0000	1.0000
Total 15-Minute Volume [veh/h]	5	9	8	3	11	7	3	81	3	6	179	7
Total Analysis Volume [veh/h]	19	34	31	12	45	27	12	322	11	24	717	27
Pedestrian Volume [ped/h]	0			0			0			0		
Bicycle Volume [bicycles/h]	0			0			0			0		

Intersection Settings

Cycle Length [s]	100
Lost time [s]	10.00

Phasing & Timing

Control Type	Permiss	Permiss	Permiss	Permiss	Permiss	Permiss	Permiss	Permiss	Permiss	Permiss	Permiss	Permiss
Signal group	0	1	0	0	1	0	0	1	0	0	1	0
Auxiliary Signal Groups												
Lead / Lag	-	-	-	-	-	-	-	-	-	-	-	-

Movement, Approach, & Intersection Results

V/C, Movement V/C Ratio	0.01	0.05	0.05	0.01	0.05	0.05	0.01	0.11	0.11	0.02	0.24	0.24
Intersection LOS	A											
Intersection V/C	0.412											

Intersection Level Of Service Report
Intersection 16: Broadway & Jackon St

Control Type:	Signalized	Delay (sec / veh):	-
Analysis Method:	ICU 1	Level Of Service:	A
Analysis Period:	15 minutes	Volume to Capacity (v/c):	0.440

Intersection Setup

Name	Jackson St			Jackson St			Broadway					
Approach	Northbound			Southbound			Eastbound			Westbound		
Lane Configuration												
Turning Movement	Left	Thru	Right	Left	Thru	Right	Left	Thru	Right	Left	Thru	Right
Lane Width [ft]	12.00	12.00	12.00	12.00	12.00	12.00	12.00	12.00	12.00	12.00	12.00	12.00
No. of Lanes in Pocket	0	0	0	0	0	0	0	0	0	0	0	0
Pocket Length [ft]	100.00	100.00	100.00	100.00	100.00	100.00	100.00	100.00	100.00	100.00	100.00	100.00
Speed [mph]	30.00			30.00			30.00			30.00		
Grade [%]	0.00			0.00			0.00			0.00		
Crosswalk	Yes			Yes			Yes			Yes		

Volumes

Name	Jackson St			Jackson St			Broadway					
Base Volume Input [veh/h]	22	101	25	42	154	30	18	211	11	18	482	34
Base Volume Adjustment Factor	1.0000	1.0000	1.0000	1.0000	1.0000	1.0000	1.0000	1.0000	1.0000	1.0000	1.0000	1.0000
Heavy Vehicles Percentage [%]	2.00	2.00	2.00	2.00	2.00	2.00	2.00	2.00	2.00	2.00	2.00	2.00
Growth Rate	1.04	1.04	1.04	1.04	1.04	1.04	1.04	1.04	1.04	1.04	1.04	1.04
In-Process Volume [veh/h]	0	0	0	0	0	0	0	79	0	0	45	0
Site-Generated Trips [veh/h]	0	0	0	3	0	3	-3	0	0	0	0	-3
Diverted Trips [veh/h]	0	0	0	0	0	0	0	0	0	0	0	0
Pass-by Trips [veh/h]	0	0	0	0	0	0	0	0	0	0	0	0
Existing Site Adjustment Volume [veh/h]	0	0	0	0	0	0	0	0	0	0	0	0
Other Volume [veh/h]	0	0	0	0	0	0	0	0	0	0	0	0
Total Hourly Volume [veh/h]	23	105	26	47	160	34	16	298	11	19	546	32
Peak Hour Factor	1.0000	1.0000	1.0000	1.0000	1.0000	1.0000	1.0000	1.0000	1.0000	1.0000	1.0000	1.0000
Other Adjustment Factor	1.0000	1.0000	1.0000	1.0000	1.0000	1.0000	1.0000	1.0000	1.0000	1.0000	1.0000	1.0000
Total 15-Minute Volume [veh/h]	6	26	7	12	40	9	4	75	3	5	137	8
Total Analysis Volume [veh/h]	23	105	26	47	160	34	16	298	11	19	546	32
Pedestrian Volume [ped/h]	0			0			0			0		
Bicycle Volume [bicycles/h]	0			0			0			0		

Intersection Settings

Cycle Length [s]	100
Lost time [s]	10.00

Phasing & Timing

Control Type	Permiss	Permiss	Permiss	Permiss	Permiss	Permiss	Permiss	Permiss	Permiss	Permiss	Permiss	Permiss
Signal group	0	1	0	0	1	0	0	1	0	0	1	0
Auxiliary Signal Groups												
Lead / Lag	-	-	-	-	-	-	-	-	-	-	-	-

Movement, Approach, & Intersection Results

V/C, Movement V/C Ratio	0.01	0.10	0.10	0.03	0.13	0.02	0.01	0.10	0.10	0.01	0.19	0.19
Intersection LOS	A											
Intersection V/C	0.440											

Intersection Level Of Service Report
Intersection 1: Brand Blvd & California Ave

Control Type:	Signalized	Delay (sec / veh):	-
Analysis Method:	ICU 1	Level Of Service:	B
Analysis Period:	15 minutes	Volume to Capacity (v/c):	0.653

Intersection Setup

Name	Brand Blvd			Brand Blvd			California Ave			Calfornia Ave		
Approach	Northbound			Southbound			Eastbound			Westbound		
Lane Configuration												
Turning Movement	Left	Thru	Right	Left	Thru	Right	Left	Thru	Right	Left	Thru	Right
Lane Width [ft]	12.00	12.00	12.00	12.00	12.00	12.00	12.00	12.00	12.00	12.00	12.00	12.00
No. of Lanes in Pocket	0	0	0	0	0	0	0	0	0	0	0	0
Pocket Length [ft]	100.00	100.00	100.00	100.00	100.00	100.00	100.00	100.00	100.00	100.00	100.00	100.00
Speed [mph]	30.00			30.00			30.00			30.00		
Grade [%]	0.00			0.00			0.00			0.00		
Crosswalk	Yes			Yes			Yes			Yes		

Volumes

Name	Brand Blvd			Brand Blvd			California Ave			Calfornia Ave		
Base Volume Input [veh/h]	62	645	67	68	762	99	47	218	57	42	202	83
Base Volume Adjustment Factor	1.0000	1.0000	1.0000	1.0000	1.0000	1.0000	1.0000	1.0000	1.0000	1.0000	1.0000	1.0000
Heavy Vehicles Percentage [%]	2.00	2.00	2.00	2.00	2.00	2.00	2.00	2.00	2.00	2.00	2.00	2.00
Growth Rate	1.02	1.02	1.02	1.02	1.02	1.02	1.02	1.02	1.02	1.02	1.02	1.02
In-Process Volume [veh/h]	0	0	0	0	0	0	0	0	0	0	0	0
Site-Generated Trips [veh/h]	0	0	0	0	0	0	0	0	0	0	0	0
Diverted Trips [veh/h]	0	0	0	0	0	0	0	0	0	0	0	0
Pass-by Trips [veh/h]	0	0	0	0	0	0	0	0	0	0	0	0
Existing Site Adjustment Volume [veh/h]	0	0	0	0	0	0	0	0	0	0	0	0
Other Volume [veh/h]	0	0	0	0	0	0	0	0	0	0	0	0
Total Hourly Volume [veh/h]	63	658	68	69	777	101	48	222	58	43	206	85
Peak Hour Factor	1.0000	1.0000	1.0000	1.0000	1.0000	1.0000	1.0000	1.0000	1.0000	1.0000	1.0000	1.0000
Other Adjustment Factor	1.0000	1.0000	1.0000	1.0000	1.0000	1.0000	1.0000	1.0000	1.0000	1.0000	1.0000	1.0000
Total 15-Minute Volume [veh/h]	16	165	17	17	194	25	12	56	15	11	52	21
Total Analysis Volume [veh/h]	63	658	68	69	777	101	48	222	58	43	206	85
Pedestrian Volume [ped/h]	0			0			0			0		
Bicycle Volume [bicycles/h]	0			0			0			0		

Intersection Settings

Cycle Length [s]	100
Lost time [s]	10.00

Phasing & Timing

Control Type	Protecte	Permiss	Permiss	Protecte	Permiss	Permiss	Permiss	Permiss	Permiss	Permiss	Permiss	Permiss
Signal group	1	1	0	1	1	0	0	1	0	0	1	0
Auxiliary Signal Groups												
Lead / Lag	Lag	-	-	Lag	-	-	-	-	-	-	-	-

Movement, Approach, & Intersection Results

V/C, Movement V/C Ratio	0.04	0.23	0.23	0.04	0.27	0.27	0.03	0.21	0.21	0.03	0.21	0.21
Intersection LOS	B											
Intersection V/C	0.653											

Intersection Level Of Service Report
Intersection 2: California Ave & Maryland Ave

Control Type:	Signalized	Delay (sec / veh):	-
Analysis Method:	ICU 1	Level Of Service:	B
Analysis Period:	15 minutes	Volume to Capacity (v/c):	0.619

Intersection Setup

Name	Maryland Ave			Maryland Ave			Calfornia Ave			California Ave		
Approach	Northbound			Southbound			Eastbound			Westbound		
Lane Configuration												
Turning Movement	Left	Thru	Right	Left	Thru	Right	Left	Thru	Right	Left	Thru	Right
Lane Width [ft]	12.00	12.00	12.00	12.00	12.00	12.00	12.00	12.00	12.00	12.00	12.00	12.00
No. of Lanes in Pocket	0	0	0	0	0	0	0	0	0	0	0	0
Pocket Length [ft]	100.00	100.00	100.00	100.00	100.00	100.00	100.00	100.00	100.00	100.00	100.00	100.00
Speed [mph]	30.00			30.00			30.00			30.00		
Grade [%]	0.00			0.00			0.00			0.00		
Crosswalk	Yes			Yes			Yes			Yes		

Volumes

Name	Maryland Ave			Maryland Ave			Calfornia Ave			California Ave		
Base Volume Input [veh/h]	80	221	47	15	75	33	23	239	50	16	258	47
Base Volume Adjustment Factor	1.0000	1.0000	1.0000	1.0000	1.0000	1.0000	1.0000	1.0000	1.0000	1.0000	1.0000	1.0000
Heavy Vehicles Percentage [%]	2.00	2.00	2.00	2.00	2.00	2.00	2.00	2.00	2.00	2.00	2.00	2.00
Growth Rate	1.02	1.02	1.02	1.02	1.02	1.02	1.02	1.02	1.02	1.02	1.02	1.02
In-Process Volume [veh/h]	0	0	0	0	0	0	0	0	0	0	0	0
Site-Generated Trips [veh/h]	0	0	0	0	0	0	0	0	0	0	0	0
Diverted Trips [veh/h]	0	0	0	0	0	0	0	0	0	0	0	0
Pass-by Trips [veh/h]	0	0	0	0	0	0	0	0	0	0	0	0
Existing Site Adjustment Volume [veh/h]	0	0	0	0	0	0	0	0	0	0	0	0
Other Volume [veh/h]	0	0	0	0	0	0	0	0	0	0	0	0
Total Hourly Volume [veh/h]	82	225	48	15	77	34	23	244	51	16	263	48
Peak Hour Factor	1.0000	1.0000	1.0000	1.0000	1.0000	1.0000	1.0000	1.0000	1.0000	1.0000	1.0000	1.0000
Other Adjustment Factor	1.0000	1.0000	1.0000	1.0000	1.0000	1.0000	1.0000	1.0000	1.0000	1.0000	1.0000	1.0000
Total 15-Minute Volume [veh/h]	21	56	12	4	19	9	6	61	13	4	66	12
Total Analysis Volume [veh/h]	82	225	48	15	77	34	23	244	51	16	263	48
Pedestrian Volume [ped/h]	0			0			0			0		
Bicycle Volume [bicycles/h]	0			0			0			0		

Intersection Settings

Cycle Length [s]	100
Lost time [s]	10.00

Phasing & Timing

Control Type	Split	Split	Split	Split	Split	Split	Permiss	Permiss	Permiss	Permiss	Permiss	Permiss
Signal group	0	1	0	0	1	0	0	1	0	0	1	0
Auxiliary Signal Groups												
Lead / Lag	-	-	-	-	-	-	-	-	-	-	-	-

Movement, Approach, & Intersection Results

V/C, Movement V/C Ratio	0.05	0.22	0.22	0.01	0.08	0.08	0.01	0.17	0.03	0.01	0.20	0.20
Intersection LOS	B											
Intersection V/C	0.619											

Intersection Level Of Service Report
Intersection 3: California Ave & Louise St

Control Type:	All-way stop	Delay (sec / veh):	27.6
Analysis Method:	HCM 2010	Level Of Service:	D
Analysis Period:	15 minutes	Volume to Capacity (v/c):	0.783

Intersection Setup

Name	Louise St			Louise St			California Ave			California Ave		
Approach	Northbound			Southbound			Eastbound			Westbound		
Lane Configuration												
Turning Movement	Left	Thru	Right	Left	Thru	Right	Left	Thru	Right	Left	Thru	Right
Lane Width [ft]	12.00	12.00	12.00	12.00	12.00	12.00	12.00	12.00	12.00	12.00	12.00	12.00
No. of Lanes in Pocket	0	0	0	0	0	0	0	0	0	0	0	0
Pocket Length [ft]	100.00	100.00	100.00	100.00	100.00	100.00	100.00	100.00	100.00	100.00	100.00	100.00
Speed [mph]	30.00			30.00			30.00			30.00		
Grade [%]	0.00			0.00			0.00			0.00		
Crosswalk	Yes			Yes			Yes			Yes		

Volumes

Name	Louise St			Louise St			California Ave			California Ave		
Base Volume Input [veh/h]	34	266	40	60	244	30	28	311	36	18	217	35
Base Volume Adjustment Factor	1.0000	1.0000	1.0000	1.0000	1.0000	1.0000	1.0000	1.0000	1.0000	1.0000	1.0000	1.0000
Heavy Vehicles Percentage [%]	2.00	2.00	2.00	2.00	2.00	2.00	2.00	2.00	2.00	2.00	2.00	2.00
Growth Rate	1.01	1.01	1.01	1.01	1.01	1.01	1.01	1.01	1.01	1.01	1.01	1.01
In-Process Volume [veh/h]	0	0	0	0	0	0	0	0	0	0	0	0
Site-Generated Trips [veh/h]	0	0	0	0	0	0	0	0	0	0	0	0
Diverted Trips [veh/h]	0	0	0	0	0	0	0	0	0	0	0	0
Pass-by Trips [veh/h]	0	0	0	0	0	0	0	0	0	0	0	0
Existing Site Adjustment Volume [veh/h]	0	0	0	0	0	0	0	0	0	0	0	0
Other Volume [veh/h]	0	0	0	0	0	0	0	0	0	0	0	0
Total Hourly Volume [veh/h]	34	269	40	61	246	30	28	314	36	18	219	35
Peak Hour Factor	1.0000	1.0000	1.0000	1.0000	1.0000	1.0000	1.0000	1.0000	1.0000	1.0000	1.0000	1.0000
Other Adjustment Factor	1.0000	1.0000	1.0000	1.0000	1.0000	1.0000	1.0000	1.0000	1.0000	1.0000	1.0000	1.0000
Total 15-Minute Volume [veh/h]	9	67	10	15	62	8	7	79	9	5	55	9
Total Analysis Volume [veh/h]	34	269	40	61	246	30	28	314	36	18	219	35
Pedestrian Volume [ped/h]	0			0			0			0		

Intersection Settings

Lanes

Capacity per Entry Lane [veh/h]	477	474	483	462
Degree of Utilization, x	0.72	0.71	0.78	0.59

Movement, Approach, & Intersection Results

95th-Percentile Queue Length [veh]	5.73	5.58	7.03	3.73
95th-Percentile Queue Length [ft]	143.22	139.40	175.85	93.17
Approach Delay [s/veh]	27.61	27.21	32.38	21.42
Approach LOS	D	D	D	C
Intersection Delay [s/veh]	27.60			
Intersection LOS	D			

Intersection Level Of Service Report
Intersection 4: California Ave & Kenwood St

Control Type:	All-way stop	Delay (sec / veh):	12.5
Analysis Method:	HCM 2010	Level Of Service:	B
Analysis Period:	15 minutes	Volume to Capacity (v/c):	0.540

Intersection Setup

Name	Kenwood St			Kenwood St			California Ave			California Ave		
Approach	Northbound			Southbound			Eastbound			Westbound		
Lane Configuration												
Turning Movement	Left	Thru	Right	Left	Thru	Right	Left	Thru	Right	Left	Thru	Right
Lane Width [ft]	12.00	12.00	12.00	12.00	12.00	12.00	12.00	12.00	12.00	12.00	12.00	12.00
No. of Lanes in Pocket	0	0	0	0	0	0	0	0	0	0	0	0
Pocket Length [ft]	100.00	100.00	100.00	100.00	100.00	100.00	100.00	100.00	100.00	100.00	100.00	100.00
Speed [mph]	30.00			30.00			30.00			30.00		
Grade [%]	0.00			0.00			0.00			0.00		
Crosswalk	Yes			Yes			Yes			Yes		

Volumes

Name	Kenwood St			Kenwood St			California Ave			California Ave		
Base Volume Input [veh/h]	40	91	36	10	61	12	18	337	21	9	276	12
Base Volume Adjustment Factor	1.0000	1.0000	1.0000	1.0000	1.0000	1.0000	1.0000	1.0000	1.0000	1.0000	1.0000	1.0000
Heavy Vehicles Percentage [%]	2.00	2.00	2.00	2.00	2.00	2.00	2.00	2.00	2.00	2.00	2.00	2.00
Growth Rate	1.01	1.01	1.01	1.01	1.01	1.01	1.01	1.01	1.01	1.01	1.01	1.01
In-Process Volume [veh/h]	0	0	0	0	0	0	0	0	0	0	0	0
Site-Generated Trips [veh/h]	0	0	0	0	0	0	0	0	0	0	0	0
Diverted Trips [veh/h]	0	0	0	0	0	0	0	0	0	0	0	0
Pass-by Trips [veh/h]	0	0	0	0	0	0	0	0	0	0	0	0
Existing Site Adjustment Volume [veh/h]	0	0	0	0	0	0	0	0	0	0	0	0
Other Volume [veh/h]	0	0	0	0	0	0	0	0	0	0	0	0
Total Hourly Volume [veh/h]	40	92	36	10	62	12	18	340	21	9	279	12
Peak Hour Factor	1.0000	1.0000	1.0000	1.0000	1.0000	1.0000	1.0000	1.0000	1.0000	1.0000	1.0000	1.0000
Other Adjustment Factor	1.0000	1.0000	1.0000	1.0000	1.0000	1.0000	1.0000	1.0000	1.0000	1.0000	1.0000	1.0000
Total 15-Minute Volume [veh/h]	10	23	9	3	16	3	5	85	5	2	70	3
Total Analysis Volume [veh/h]	40	92	36	10	62	12	18	340	21	9	279	12
Pedestrian Volume [ped/h]	0			0			0			0		

Intersection Settings

Lanes

Capacity per Entry Lane [veh/h]	622	601	702	687
Degree of Utilization, x	0.27	0.14	0.54	0.44

Movement, Approach, & Intersection Results

95th-Percentile Queue Length [veh]	1.09	0.48	3.26	2.22
95th-Percentile Queue Length [ft]	27.21	12.11	81.39	55.58
Approach Delay [s/veh]	10.91	9.97	13.97	12.24
Approach LOS	B	A	B	B
Intersection Delay [s/veh]	12.50			
Intersection LOS	B			

Intersection Level Of Service Report
Intersection 5: California Ave & Jackson St

Control Type:	All-way stop	Delay (sec / veh):	53.0
Analysis Method:	HCM 2010	Level Of Service:	F
Analysis Period:	15 minutes	Volume to Capacity (v/c):	0.936

Intersection Setup

Name	Jackson St			Jackson St			California Ave			California Ave		
Approach	Northbound			Southbound			Eastbound			Westbound		
Lane Configuration												
Turning Movement	Left	Thru	Right	Left	Thru	Right	Left	Thru	Right	Left	Thru	Right
Lane Width [ft]	12.00	12.00	12.00	12.00	12.00	12.00	12.00	12.00	12.00	12.00	12.00	12.00
No. of Lanes in Pocket	0	0	0	0	0	0	0	0	0	0	0	0
Pocket Length [ft]	100.00	100.00	100.00	100.00	100.00	100.00	100.00	100.00	100.00	100.00	100.00	100.00
Speed [mph]	30.00			30.00			30.00			30.00		
Grade [%]	0.00			0.00			0.00			0.00		
Crosswalk	Yes			Yes			Yes			Yes		

Volumes

Name	Jackson St			Jackson St			California Ave			California Ave		
Base Volume Input [veh/h]	23	301	58	62	243	15	19	345	15	18	269	62
Base Volume Adjustment Factor	1.0000	1.0000	1.0000	1.0000	1.0000	1.0000	1.0000	1.0000	1.0000	1.0000	1.0000	1.0000
Heavy Vehicles Percentage [%]	2.00	2.00	2.00	2.00	2.00	2.00	2.00	2.00	2.00	2.00	2.00	2.00
Growth Rate	1.01	1.01	1.01	1.01	1.01	1.01	1.01	1.01	1.01	1.01	1.01	1.01
In-Process Volume [veh/h]	0	0	0	0	0	0	0	0	0	0	0	0
Site-Generated Trips [veh/h]	0	0	0	0	0	0	0	0	0	0	0	0
Diverted Trips [veh/h]	0	0	0	0	0	0	0	0	0	0	0	0
Pass-by Trips [veh/h]	0	0	0	0	0	0	0	0	0	0	0	0
Existing Site Adjustment Volume [veh/h]	0	0	0	0	0	0	0	0	0	0	0	0
Other Volume [veh/h]	0	0	0	0	0	0	0	0	0	0	0	0
Total Hourly Volume [veh/h]	23	304	59	63	245	15	19	348	15	18	272	63
Peak Hour Factor	1.0000	1.0000	1.0000	1.0000	1.0000	1.0000	1.0000	1.0000	1.0000	1.0000	1.0000	1.0000
Other Adjustment Factor	1.0000	1.0000	1.0000	1.0000	1.0000	1.0000	1.0000	1.0000	1.0000	1.0000	1.0000	1.0000
Total 15-Minute Volume [veh/h]	6	76	15	16	61	4	5	87	4	5	68	16
Total Analysis Volume [veh/h]	23	304	59	63	245	15	19	348	15	18	272	63
Pedestrian Volume [ped/h]	0			0			0			0		

Intersection Settings

Lanes

Capacity per Entry Lane [veh/h]	412	395	409	406
Degree of Utilization, x	0.94	0.82	0.93	0.87

Movement, Approach, & Intersection Results

95th-Percentile Queue Length [veh]	10.50	7.39	10.40	8.66
95th-Percentile Queue Length [ft]	262.61	184.67	260.11	216.51
Approach Delay [s/veh]	59.76	42.04	59.61	48.31
Approach LOS	F	E	F	E
Intersection Delay [s/veh]	52.96			
Intersection LOS	F			

Intersection Level Of Service Report
Intersection 6: Wilson Ave & Brand Blvd

Control Type:	Signalized	Delay (sec / veh):	-
Analysis Method:	ICU 1	Level Of Service:	B
Analysis Period:	15 minutes	Volume to Capacity (v/c):	0.641

Intersection Setup

Name	Brand Blvd			Brand Blvd			Wilson Ave			Wilson Ave		
Approach	Northbound			Southbound			Eastbound			Westbound		
Lane Configuration												
Turning Movement	Left	Thru	Right	Left	Thru	Right	Left	Thru	Right	Left	Thru	Right
Lane Width [ft]	12.00	12.00	12.00	12.00	12.00	12.00	12.00	12.00	12.00	12.00	12.00	12.00
No. of Lanes in Pocket	0	0	0	0	0	0	0	0	0	0	0	0
Pocket Length [ft]	100.00	100.00	100.00	100.00	100.00	100.00	100.00	100.00	100.00	100.00	100.00	100.00
Speed [mph]	30.00			30.00			30.00			30.00		
Grade [%]	0.00			0.00			0.00			0.00		
Crosswalk	Yes			Yes			Yes			Yes		

Volumes

Name	Brand Blvd			Brand Blvd			Wilson Ave			Wilson Ave		
Base Volume Input [veh/h]	64	541	51	98	726	74	35	286	79	98	316	94
Base Volume Adjustment Factor	1.0000	1.0000	1.0000	1.0000	1.0000	1.0000	1.0000	1.0000	1.0000	1.0000	1.0000	1.0000
Heavy Vehicles Percentage [%]	2.00	2.00	2.00	2.00	2.00	2.00	2.00	2.00	2.00	2.00	2.00	2.00
Growth Rate	1.02	1.02	1.02	1.02	1.02	1.02	1.02	1.02	1.02	1.02	1.02	1.02
In-Process Volume [veh/h]	0	0	0	0	0	0	0	0	0	0	0	0
Site-Generated Trips [veh/h]	0	0	0	0	0	0	0	0	0	0	0	0
Diverted Trips [veh/h]	0	0	0	0	0	0	0	0	0	0	0	0
Pass-by Trips [veh/h]	0	0	0	0	0	0	0	0	0	0	0	0
Existing Site Adjustment Volume [veh/h]	0	0	0	0	0	0	0	0	0	0	0	0
Other Volume [veh/h]	0	0	0	0	0	0	0	0	0	0	0	0
Total Hourly Volume [veh/h]	65	552	52	100	741	75	36	292	81	100	322	96
Peak Hour Factor	1.0000	1.0000	1.0000	1.0000	1.0000	1.0000	1.0000	1.0000	1.0000	1.0000	1.0000	1.0000
Other Adjustment Factor	1.0000	1.0000	1.0000	1.0000	1.0000	1.0000	1.0000	1.0000	1.0000	1.0000	1.0000	1.0000
Total 15-Minute Volume [veh/h]	16	138	13	25	185	19	9	73	20	25	81	24
Total Analysis Volume [veh/h]	65	552	52	100	741	75	36	292	81	100	322	96
Pedestrian Volume [ped/h]	0			0			0			0		
Bicycle Volume [bicycles/h]	0			0			0			0		

Intersection Settings

Cycle Length [s]	100
Lost time [s]	10.00

Phasing & Timing

Control Type	Protecte	Permiss	Permiss	Protecte	Permiss	Permiss	Permiss	Permiss	Permiss	Permiss	Permiss	Permiss
Signal group	1	1	0	1	1	0	0	1	0	0	1	0
Auxiliary Signal Groups												
Lead / Lag	Lag	-	-	Lag	-	-	-	-	-	-	-	-

Movement, Approach, & Intersection Results

V/C, Movement V/C Ratio	0.04	0.19	0.19	0.06	0.26	0.26	0.02	0.18	0.05	0.06	0.20	0.06
Intersection LOS	B											
Intersection V/C	0.641											

Intersection Level Of Service Report
Intersection 7: Wilson Ave & Maryland Ave

Control Type:	Signalized	Delay (sec / veh):	-
Analysis Method:	ICU 1	Level Of Service:	A
Analysis Period:	15 minutes	Volume to Capacity (v/c):	0.541

Intersection Setup

Name	Maryland Ave			Maryland Ave			Wilson Ave			Wilson Ave		
Approach	Northbound			Southbound			Eastbound			Westbound		
Lane Configuration												
Turning Movement	Left	Thru	Right	Left	Thru	Right	Left	Thru	Right	Left	Thru	Right
Lane Width [ft]	12.00	12.00	12.00	12.00	12.00	12.00	12.00	12.00	12.00	12.00	12.00	12.00
No. of Lanes in Pocket	0	0	0	0	0	0	0	0	0	0	0	0
Pocket Length [ft]	100.00	100.00	100.00	100.00	100.00	100.00	100.00	100.00	100.00	100.00	100.00	100.00
Speed [mph]	30.00			30.00			30.00			30.00		
Grade [%]	0.00			0.00			0.00			0.00		
Crosswalk	Yes			Yes			Yes			Yes		

Volumes

Name	Maryland Ave			Maryland Ave			Wilson Ave			Wilson Ave		
Base Volume Input [veh/h]	78	27	84	136	63	75	20	362	41	16	375	49
Base Volume Adjustment Factor	1.0000	1.0000	1.0000	1.0000	1.0000	1.0000	1.0000	1.0000	1.0000	1.0000	1.0000	1.0000
Heavy Vehicles Percentage [%]	2.00	2.00	2.00	2.00	2.00	2.00	2.00	2.00	2.00	2.00	2.00	2.00
Growth Rate	1.02	1.02	1.02	1.02	1.02	1.02	1.02	1.02	1.02	1.02	1.02	1.02
In-Process Volume [veh/h]	0	0	0	0	0	0	0	0	0	0	0	0
Site-Generated Trips [veh/h]	0	0	0	0	0	0	0	0	0	0	0	0
Diverted Trips [veh/h]	0	0	0	0	0	0	0	0	0	0	0	0
Pass-by Trips [veh/h]	0	0	0	0	0	0	0	0	0	0	0	0
Existing Site Adjustment Volume [veh/h]	0	0	0	0	0	0	0	0	0	0	0	0
Other Volume [veh/h]	0	0	0	0	0	0	0	0	0	0	0	0
Total Hourly Volume [veh/h]	80	28	86	139	64	77	20	369	42	16	383	50
Peak Hour Factor	1.0000	1.0000	1.0000	1.0000	1.0000	1.0000	1.0000	1.0000	1.0000	1.0000	1.0000	1.0000
Other Adjustment Factor	1.0000	1.0000	1.0000	1.0000	1.0000	1.0000	1.0000	1.0000	1.0000	1.0000	1.0000	1.0000
Total 15-Minute Volume [veh/h]	20	7	22	35	16	19	5	92	11	4	96	13
Total Analysis Volume [veh/h]	80	28	86	139	64	77	20	369	42	16	383	50
Pedestrian Volume [ped/h]	0			0			0			0		
Bicycle Volume [bicycles/h]	0			0			0			0		

Intersection Settings

Cycle Length [s]	100
Lost time [s]	10.00

Phasing & Timing

Control Type	Permiss	Permiss	Permiss	Permiss	Permiss	Permiss	Permiss	Permiss	Permiss	Permiss	Permiss	Permiss
Signal group	0	1	0	0	1	0	0	1	0	0	1	0
Auxiliary Signal Groups												
Lead / Lag	-	-	-	-	-	-	-	-	-	-	-	-

Movement, Approach, & Intersection Results

V/C, Movement V/C Ratio	0.05	0.07	0.07	0.09	0.09	0.09	0.01	0.26	0.26	0.01	0.27	0.27
Intersection LOS	A											
Intersection V/C	0.541											

Intersection Level Of Service Report
Intersection 8: Wilson Ave & Louise St

Control Type:	Signalized	Delay (sec / veh):	-
Analysis Method:	ICU 1	Level Of Service:	D
Analysis Period:	15 minutes	Volume to Capacity (v/c):	0.813

Intersection Setup

Name	Louise St			Louise St			Wilson Ave			Wilson Ave		
Approach	Northbound			Southbound			Eastbound			Westbound		
Lane Configuration												
Turning Movement	Left	Thru	Right	Left	Thru	Right	Left	Thru	Right	Left	Thru	Right
Lane Width [ft]	12.00	12.00	12.00	12.00	12.00	12.00	12.00	12.00	12.00	12.00	12.00	12.00
No. of Lanes in Pocket	0	0	0	0	0	0	0	0	0	0	0	0
Pocket Length [ft]	100.00	100.00	100.00	100.00	100.00	100.00	100.00	100.00	100.00	100.00	100.00	100.00
Speed [mph]	30.00			30.00			30.00			30.00		
Grade [%]	0.00			0.00			0.00			0.00		
Crosswalk	Yes			Yes			Yes			Yes		

Volumes

Name	Louise St			Louise St			Wilson Ave			Wilson Ave		
Base Volume Input [veh/h]	27	342	81	46	240	37	28	501	99	34	347	41
Base Volume Adjustment Factor	1.0000	1.0000	1.0000	1.0000	1.0000	1.0000	1.0000	1.0000	1.0000	1.0000	1.0000	1.0000
Heavy Vehicles Percentage [%]	2.00	2.00	2.00	2.00	2.00	2.00	2.00	2.00	2.00	2.00	2.00	2.00
Growth Rate	1.01	1.01	1.01	1.01	1.01	1.01	1.01	1.01	1.01	1.01	1.01	1.01
In-Process Volume [veh/h]	0	0	0	0	0	0	0	0	0	0	0	0
Site-Generated Trips [veh/h]	0	0	0	0	0	0	0	0	0	0	0	0
Diverted Trips [veh/h]	0	0	0	0	0	0	0	0	0	0	0	0
Pass-by Trips [veh/h]	0	0	0	0	0	0	0	0	0	0	0	0
Existing Site Adjustment Volume [veh/h]	0	0	0	0	0	0	0	0	0	0	0	0
Other Volume [veh/h]	0	0	0	0	0	0	0	0	0	0	0	0
Total Hourly Volume [veh/h]	27	345	82	46	242	37	28	506	100	34	350	41
Peak Hour Factor	1.0000	1.0000	1.0000	1.0000	1.0000	1.0000	1.0000	1.0000	1.0000	1.0000	1.0000	1.0000
Other Adjustment Factor	1.0000	1.0000	1.0000	1.0000	1.0000	1.0000	1.0000	1.0000	1.0000	1.0000	1.0000	1.0000
Total 15-Minute Volume [veh/h]	7	86	21	12	61	9	7	127	25	9	88	10
Total Analysis Volume [veh/h]	27	345	82	46	242	37	28	506	100	34	350	41
Pedestrian Volume [ped/h]	0			0			0			0		
Bicycle Volume [bicycles/h]	0			0			0			0		

Intersection Settings

Cycle Length [s]	100
Lost time [s]	10.00

Phasing & Timing

Control Type	Permiss	Permiss	Permiss	Permiss	Permiss	Permiss	Permiss	Permiss	Permiss	Permiss	Permiss	Permiss
Signal group	0	1	0	0	1	0	0	1	0	0	1	0
Auxiliary Signal Groups												
Lead / Lag	-	-	-	-	-	-	-	-	-	-	-	-

Movement, Approach, & Intersection Results

V/C, Movement V/C Ratio	0.02	0.28	0.28	0.03	0.20	0.20	0.02	0.38	0.38	0.02	0.24	0.24
Intersection LOS	D											
Intersection V/C	0.813											

Intersection Level Of Service Report
Intersection 9: Wilson Ave & Kenwood St

Control Type:	Signalized	Delay (sec / veh):	-
Analysis Method:	ICU 1	Level Of Service:	B
Analysis Period:	15 minutes	Volume to Capacity (v/c):	0.601

Intersection Setup

Name	Kenwood St			Kenwood St			Wilson Ave			Wilson Ave		
Approach	Northbound			Southbound			Eastbound			Westbound		
Lane Configuration												
Turning Movement	Left	Thru	Right	Left	Thru	Right	Left	Thru	Right	Left	Thru	Right
Lane Width [ft]	12.00	12.00	12.00	12.00	12.00	12.00	12.00	12.00	12.00	12.00	12.00	12.00
No. of Lanes in Pocket	0	0	0	0	0	0	0	0	0	0	0	0
Pocket Length [ft]	100.00	100.00	100.00	100.00	100.00	100.00	100.00	100.00	100.00	100.00	100.00	100.00
Speed [mph]	30.00			30.00			30.00			30.00		
Grade [%]	0.00			0.00			0.00			0.00		
Crosswalk	Yes			Yes			Yes			Yes		

Volumes

Name	Kenwood St			Kenwood St			Wilson Ave			Wilson Ave		
Base Volume Input [veh/h]	17	87	34	21	57	13	44	510	58	24	338	27
Base Volume Adjustment Factor	1.0000	1.0000	1.0000	1.0000	1.0000	1.0000	1.0000	1.0000	1.0000	1.0000	1.0000	1.0000
Heavy Vehicles Percentage [%]	2.00	2.00	2.00	2.00	2.00	2.00	2.00	2.00	2.00	2.00	2.00	2.00
Growth Rate	1.01	1.01	1.01	1.01	1.01	1.01	1.01	1.01	1.01	1.01	1.01	1.01
In-Process Volume [veh/h]	0	0	0	0	0	0	0	0	0	0	0	0
Site-Generated Trips [veh/h]	0	0	0	0	0	0	0	0	0	0	0	0
Diverted Trips [veh/h]	0	0	0	0	0	0	0	0	0	0	0	0
Pass-by Trips [veh/h]	0	0	0	0	0	0	0	0	0	0	0	0
Existing Site Adjustment Volume [veh/h]	0	0	0	0	0	0	0	0	0	0	0	0
Other Volume [veh/h]	0	0	0	0	0	0	0	0	0	0	0	0
Total Hourly Volume [veh/h]	17	88	34	21	58	13	44	515	59	24	341	27
Peak Hour Factor	1.0000	1.0000	1.0000	1.0000	1.0000	1.0000	1.0000	1.0000	1.0000	1.0000	1.0000	1.0000
Other Adjustment Factor	1.0000	1.0000	1.0000	1.0000	1.0000	1.0000	1.0000	1.0000	1.0000	1.0000	1.0000	1.0000
Total 15-Minute Volume [veh/h]	4	22	9	5	15	3	11	129	15	6	85	7
Total Analysis Volume [veh/h]	17	88	34	21	58	13	44	515	59	24	341	27
Pedestrian Volume [ped/h]	0			0			0			0		
Bicycle Volume [bicycles/h]	0			0			0			0		

Intersection Settings

Cycle Length [s]	100
Lost time [s]	10.00

Phasing & Timing

Control Type	Permiss	Permiss	Permiss	Permiss	Permiss	Permiss	Permiss	Permiss	Permiss	Permiss	Permiss	Permiss
Signal group	0	1	0	0	1	0	0	1	0	0	1	0
Auxiliary Signal Groups												
Lead / Lag	-	-	-	-	-	-	-	-	-	-	-	-

Movement, Approach, & Intersection Results

V/C, Movement V/C Ratio	0.01	0.09	0.09	0.01	0.06	0.06	0.03	0.39	0.39	0.02	0.25	0.25
Intersection LOS	B											
Intersection V/C	0.601											

Intersection Level Of Service Report
Intersection 10: Wilson Ave & Jackson St

Control Type:	Signalized	Delay (sec / veh):	-
Analysis Method:	ICU 1	Level Of Service:	B
Analysis Period:	15 minutes	Volume to Capacity (v/c):	0.695

Intersection Setup

Name	Jackson St			Jackson St			Wilson Ave			Wilson Ave		
Approach	Northbound			Southbound			Eastbound			Westbound		
Lane Configuration												
Turning Movement	Left	Thru	Right	Left	Thru	Right	Left	Thru	Right	Left	Thru	Right
Lane Width [ft]	12.00	12.00	12.00	12.00	12.00	12.00	12.00	12.00	12.00	12.00	12.00	12.00
No. of Lanes in Pocket	0	0	0	0	0	0	0	0	0	0	0	0
Pocket Length [ft]	100.00	100.00	100.00	100.00	100.00	100.00	100.00	100.00	100.00	100.00	100.00	100.00
Speed [mph]	30.00			30.00			30.00			30.00		
Grade [%]	0.00			0.00			0.00			0.00		
Crosswalk	Yes			Yes			Yes			Yes		

Volumes

Name	Jackson St			Jackson St			Wilson Ave			Wilson Ave		
Base Volume Input [veh/h]	26	229	59	73	207	28	31	513	32	37	422	86
Base Volume Adjustment Factor	1.0000	1.0000	1.0000	1.0000	1.0000	1.0000	1.0000	1.0000	1.0000	1.0000	1.0000	1.0000
Heavy Vehicles Percentage [%]	2.00	2.00	2.00	2.00	2.00	2.00	2.00	2.00	2.00	2.00	2.00	2.00
Growth Rate	1.01	1.01	1.01	1.01	1.01	1.01	1.01	1.01	1.01	1.01	1.01	1.01
In-Process Volume [veh/h]	0	0	0	0	0	0	0	0	0	0	0	0
Site-Generated Trips [veh/h]	0	0	0	0	0	0	0	0	0	0	0	0
Diverted Trips [veh/h]	0	0	0	0	0	0	0	0	0	0	0	0
Pass-by Trips [veh/h]	0	0	0	0	0	0	0	0	0	0	0	0
Existing Site Adjustment Volume [veh/h]	0	0	0	0	0	0	0	0	0	0	0	0
Other Volume [veh/h]	0	0	0	0	0	0	0	0	0	0	0	0
Total Hourly Volume [veh/h]	26	231	60	74	209	28	31	518	32	37	426	87
Peak Hour Factor	1.0000	1.0000	1.0000	1.0000	1.0000	1.0000	1.0000	1.0000	1.0000	1.0000	1.0000	1.0000
Other Adjustment Factor	1.0000	1.0000	1.0000	1.0000	1.0000	1.0000	1.0000	1.0000	1.0000	1.0000	1.0000	1.0000
Total 15-Minute Volume [veh/h]	7	58	15	19	52	7	8	130	8	9	107	22
Total Analysis Volume [veh/h]	26	231	60	74	209	28	31	518	32	37	426	87
Pedestrian Volume [ped/h]	0			0			0			0		
Bicycle Volume [bicycles/h]	0			0			0			0		

Intersection Settings

Cycle Length [s]	100
Lost time [s]	10.00

Phasing & Timing

Control Type	Permiss	Permiss	Permiss	Permiss	Permiss	Permiss	Permiss	Permiss	Permiss	Permiss	Permiss	Permiss
Signal group	0	1	0	0	1	0	0	1	0	0	1	0
Auxiliary Signal Groups												
Lead / Lag	-	-	-	-	-	-	-	-	-	-	-	-

Movement, Approach, & Intersection Results

V/C, Movement V/C Ratio	0.02	0.18	0.18	0.05	0.15	0.15	0.02	0.34	0.34	0.02	0.32	0.32
Intersection LOS	B											
Intersection V/C	0.695											

Intersection Level Of Service Report
Intersection 11: Wilson Ave & Glendale Ave

Control Type:	Signalized	Delay (sec / veh):	-
Analysis Method:	ICU 1	Level Of Service:	C
Analysis Period:	15 minutes	Volume to Capacity (v/c):	0.779

Intersection Setup

Name							Wilson Ave			Wilson Ave		
Approach	Northbound			Southbound			Eastbound			Westbound		
Lane Configuration												
Turning Movement	Left	Thru	Right	Left	Thru	Right	Left	Thru	Right	Left	Thru	Right
Lane Width [ft]	12.00	12.00	12.00	12.00	12.00	12.00	12.00	12.00	12.00	12.00	12.00	12.00
No. of Lanes in Pocket	0	0	0	0	0	0	0	0	0	0	0	0
Pocket Length [ft]	100.00	100.00	100.00	100.00	100.00	100.00	100.00	100.00	100.00	100.00	100.00	100.00
Speed [mph]	30.00			30.00			30.00			30.00		
Grade [%]	0.00			0.00			0.00			0.00		
Crosswalk	Yes			Yes			Yes			Yes		

Volumes

Name							Wilson Ave			Wilson Ave		
Base Volume Input [veh/h]	93	886	78	167	750	87	204	376	74	56	296	86
Base Volume Adjustment Factor	1.0000	1.0000	1.0000	1.0000	1.0000	1.0000	1.0000	1.0000	1.0000	1.0000	1.0000	1.0000
Heavy Vehicles Percentage [%]	2.00	2.00	2.00	2.00	2.00	2.00	2.00	2.00	2.00	2.00	2.00	2.00
Growth Rate	1.01	1.01	1.01	1.01	1.01	1.01	1.01	1.01	1.01	1.01	1.01	1.01
In-Process Volume [veh/h]	0	0	0	0	0	0	0	0	0	0	0	0
Site-Generated Trips [veh/h]	0	0	0	0	0	0	0	0	0	0	0	0
Diverted Trips [veh/h]	0	0	0	0	0	0	0	0	0	0	0	0
Pass-by Trips [veh/h]	0	0	0	0	0	0	0	0	0	0	0	0
Existing Site Adjustment Volume [veh/h]	0	0	0	0	0	0	0	0	0	0	0	0
Other Volume [veh/h]	0	0	0	0	0	0	0	0	0	0	0	0
Total Hourly Volume [veh/h]	94	895	79	169	758	88	206	380	75	57	299	87
Peak Hour Factor	1.0000	1.0000	1.0000	1.0000	1.0000	1.0000	1.0000	1.0000	1.0000	1.0000	1.0000	1.0000
Other Adjustment Factor	1.0000	1.0000	1.0000	1.0000	1.0000	1.0000	1.0000	1.0000	1.0000	1.0000	1.0000	1.0000
Total 15-Minute Volume [veh/h]	24	224	20	42	190	22	52	95	19	14	75	22
Total Analysis Volume [veh/h]	94	895	79	169	758	88	206	380	75	57	299	87
Pedestrian Volume [ped/h]	0			0			0			0		
Bicycle Volume [bicycles/h]	0			0			0			0		

Intersection Settings

Cycle Length [s]	100
Lost time [s]	10.00

Phasing & Timing

Control Type	Protecte	Permiss	Permiss	Protecte	Permiss	Permiss	Protecte	Permiss	Permiss	Protecte	Permiss	Permiss
Signal group	1	1	0	1	1	0	1	1	0	1	1	0
Auxiliary Signal Groups												
Lead / Lag	Lag	-	-	Lag	-	-	Lag	-	-	Lag	-	-

Movement, Approach, & Intersection Results

V/C, Movement V/C Ratio	0.06	0.20	0.20	0.11	0.24	0.06	0.13	0.24	0.05	0.04	0.24	0.24
Intersection LOS	C											
Intersection V/C	0.779											

Intersection Level Of Service Report
Intersection 12: Broadway & Brand Blvd

Control Type:	Signalized	Delay (sec / veh):	-
Analysis Method:	ICU 1	Level Of Service:	B
Analysis Period:	15 minutes	Volume to Capacity (v/c):	0.654

Intersection Setup

Name	Brand Blvd			Brand Blvd			Broadway			Broadway		
Approach	Northbound			Southbound			Eastbound			Westbound		
Lane Configuration												
Turning Movement	Left	Thru	Right	Left	Thru	Right	Left	Thru	Right	Left	Thru	Right
Lane Width [ft]	12.00	12.00	12.00	12.00	12.00	12.00	12.00	12.00	12.00	12.00	12.00	12.00
No. of Lanes in Pocket	0	0	0	0	0	0	0	0	0	0	0	0
Pocket Length [ft]	100.00	100.00	100.00	100.00	100.00	100.00	100.00	100.00	100.00	100.00	100.00	100.00
Speed [mph]	30.00			30.00			30.00			30.00		
Grade [%]	0.00			0.00			0.00			0.00		
Crosswalk	Yes			Yes			Yes			Yes		

Volumes

Name	Brand Blvd			Brand Blvd			Broadway			Broadway		
Base Volume Input [veh/h]	136	555	125	115	609	140	150	604	73	139	429	139
Base Volume Adjustment Factor	1.0000	1.0000	1.0000	1.0000	1.0000	1.0000	1.0000	1.0000	1.0000	1.0000	1.0000	1.0000
Heavy Vehicles Percentage [%]	2.00	2.00	2.00	2.00	2.00	2.00	2.00	2.00	2.00	2.00	2.00	2.00
Growth Rate	1.02	1.02	1.02	1.02	1.02	1.02	1.02	1.02	1.02	1.02	1.02	1.02
In-Process Volume [veh/h]	0	0	0	0	0	0	0	0	0	0	0	0
Site-Generated Trips [veh/h]	0	0	0	0	0	0	0	0	0	0	0	0
Diverted Trips [veh/h]	0	0	0	0	0	0	0	0	0	0	0	0
Pass-by Trips [veh/h]	0	0	0	0	0	0	0	0	0	0	0	0
Existing Site Adjustment Volume [veh/h]	0	0	0	0	0	0	0	0	0	0	0	0
Other Volume [veh/h]	0	0	0	0	0	0	0	0	0	0	0	0
Total Hourly Volume [veh/h]	139	566	128	117	621	143	153	616	74	142	438	142
Peak Hour Factor	1.0000	1.0000	1.0000	1.0000	1.0000	1.0000	1.0000	1.0000	1.0000	1.0000	1.0000	1.0000
Other Adjustment Factor	1.0000	1.0000	1.0000	1.0000	1.0000	1.0000	1.0000	1.0000	1.0000	1.0000	1.0000	1.0000
Total 15-Minute Volume [veh/h]	35	142	32	29	155	36	38	154	19	36	110	36
Total Analysis Volume [veh/h]	139	566	128	117	621	143	153	616	74	142	438	142
Pedestrian Volume [ped/h]	0			0			0			0		
Bicycle Volume [bicycles/h]	0			0			0			0		

Intersection Settings

Cycle Length [s]	100
Lost time [s]	10.00

Phasing & Timing

Control Type	Protecte	Permiss	Permiss	Protecte	Permiss	Permiss	Protecte	Permiss	Permiss	Protecte	Permiss	Permiss
Signal group	1	1	0	1	1	0	1	1	0	1	1	0
Auxiliary Signal Groups												
Lead / Lag	Lag	-	-	Lag	-	-	Lag	-	-	Lag	-	-

Movement, Approach, & Intersection Results

V/C, Movement V/C Ratio	0.09	0.18	0.08	0.07	0.16	0.16	0.10	0.22	0.22	0.09	0.18	0.18
Intersection LOS	B											
Intersection V/C	0.654											

Intersection Level Of Service Report
Intersection 13: Broadway & Maryland Ave

Control Type:	Signalized	Delay (sec / veh):	-
Analysis Method:	ICU 1	Level Of Service:	A
Analysis Period:	15 minutes	Volume to Capacity (v/c):	0.495

Intersection Setup

Name	Maryland Ave			Maryland Ave			Broadway			Broadway		
Approach	Northbound			Southbound			Eastbound			Westbound		
Lane Configuration												
Turning Movement	Left	Thru	Right	Left	Thru	Right	Left	Thru	Right	Left	Thru	Right
Lane Width [ft]	12.00	12.00	12.00	12.00	12.00	12.00	12.00	12.00	12.00	12.00	12.00	12.00
No. of Lanes in Pocket	0	0	0	0	0	0	0	0	0	0	0	0
Pocket Length [ft]	100.00	100.00	100.00	100.00	100.00	100.00	100.00	100.00	100.00	100.00	100.00	100.00
Speed [mph]	30.00			30.00			30.00			30.00		
Grade [%]	0.00			0.00			0.00			0.00		
Crosswalk	Yes			Yes			Yes			Yes		

Volumes

Name	Maryland Ave			Maryland Ave			Broadway			Broadway		
Base Volume Input [veh/h]	86	13	76	60	16	59	28	696	100	46	541	25
Base Volume Adjustment Factor	1.0000	1.0000	1.0000	1.0000	1.0000	1.0000	1.0000	1.0000	1.0000	1.0000	1.0000	1.0000
Heavy Vehicles Percentage [%]	2.00	2.00	2.00	2.00	2.00	2.00	2.00	2.00	2.00	2.00	2.00	2.00
Growth Rate	1.02	1.02	1.02	1.02	1.02	1.02	1.02	1.02	1.02	1.02	1.02	1.02
In-Process Volume [veh/h]	0	0	0	0	0	0	0	0	0	0	0	0
Site-Generated Trips [veh/h]	0	0	0	0	0	0	0	0	0	0	0	0
Diverted Trips [veh/h]	0	0	0	0	0	0	0	0	0	0	0	0
Pass-by Trips [veh/h]	0	0	0	0	0	0	0	0	0	0	0	0
Existing Site Adjustment Volume [veh/h]	0	0	0	0	0	0	0	0	0	0	0	0
Other Volume [veh/h]	0	0	0	0	0	0	0	0	0	0	0	0
Total Hourly Volume [veh/h]	88	13	78	61	16	60	29	710	102	47	552	26
Peak Hour Factor	1.0000	1.0000	1.0000	1.0000	1.0000	1.0000	1.0000	1.0000	1.0000	1.0000	1.0000	1.0000
Other Adjustment Factor	1.0000	1.0000	1.0000	1.0000	1.0000	1.0000	1.0000	1.0000	1.0000	1.0000	1.0000	1.0000
Total 15-Minute Volume [veh/h]	22	3	20	15	4	15	7	178	26	12	138	7
Total Analysis Volume [veh/h]	88	13	78	61	16	60	29	710	102	47	552	26
Pedestrian Volume [ped/h]	0			0			0			0		
Bicycle Volume [bicycles/h]	0			0			0			0		

Intersection Settings

Cycle Length [s]	100
Lost time [s]	10.00

Phasing & Timing

Control Type	Permiss	Permiss	Permiss	Permiss	Permiss	Permiss	Permiss	Permiss	Permiss	Permiss	Permiss	Permiss
Signal group	0	1	0	0	1	0	0	1	0	0	1	0
Auxiliary Signal Groups												
Lead / Lag	-	-	-	-	-	-	-	-	-	-	-	-

Movement, Approach, & Intersection Results

V/C, Movement V/C Ratio	0.06	0.06	0.06	0.04	0.05	0.05	0.02	0.26	0.26	0.03	0.18	0.18
Intersection LOS	A											
Intersection V/C	0.495											

Intersection Level Of Service Report
Intersection 14: Broadway & Louise St

Control Type:	Signalized	Delay (sec / veh):	-
Analysis Method:	ICU 1	Level Of Service:	A
Analysis Period:	15 minutes	Volume to Capacity (v/c):	0.586

Intersection Setup

Name	Louise St			Louise St			Broadway			Broadway		
Approach	Northbound			Southbound			Eastbound			Westbound		
Lane Configuration												
Turning Movement	Left	Thru	Right	Left	Thru	Right	Left	Thru	Right	Left	Thru	Right
Lane Width [ft]	12.00	12.00	12.00	12.00	12.00	12.00	12.00	12.00	12.00	12.00	12.00	12.00
No. of Lanes in Pocket	0	0	0	0	0	0	0	0	0	0	0	0
Pocket Length [ft]	100.00	100.00	100.00	100.00	100.00	100.00	100.00	100.00	100.00	100.00	100.00	100.00
Speed [mph]	30.00			30.00			30.00			30.00		
Grade [%]	0.00			0.00			0.00			0.00		
Crosswalk	Yes			Yes			Yes			Yes		

Volumes

Name	Louise St			Louise St			Broadway			Broadway		
Base Volume Input [veh/h]	32	259	46	40	261	40	65	691	42	18	554	85
Base Volume Adjustment Factor	1.0000	1.0000	1.0000	1.0000	1.0000	1.0000	1.0000	1.0000	1.0000	1.0000	1.0000	1.0000
Heavy Vehicles Percentage [%]	2.00	2.00	2.00	2.00	2.00	2.00	2.00	2.00	2.00	2.00	2.00	2.00
Growth Rate	1.01	1.01	1.01	1.01	1.01	1.01	1.01	1.01	1.01	1.01	1.01	1.01
In-Process Volume [veh/h]	0	0	0	0	0	0	0	0	0	0	0	0
Site-Generated Trips [veh/h]	0	0	0	0	0	0	0	0	0	0	0	0
Diverted Trips [veh/h]	0	0	0	0	0	0	0	0	0	0	0	0
Pass-by Trips [veh/h]	0	0	0	0	0	0	0	0	0	0	0	0
Existing Site Adjustment Volume [veh/h]	0	0	0	0	0	0	0	0	0	0	0	0
Other Volume [veh/h]	0	0	0	0	0	0	0	0	0	0	0	0
Total Hourly Volume [veh/h]	32	262	46	40	264	40	66	698	42	18	560	86
Peak Hour Factor	1.0000	1.0000	1.0000	1.0000	1.0000	1.0000	1.0000	1.0000	1.0000	1.0000	1.0000	1.0000
Other Adjustment Factor	1.0000	1.0000	1.0000	1.0000	1.0000	1.0000	1.0000	1.0000	1.0000	1.0000	1.0000	1.0000
Total 15-Minute Volume [veh/h]	8	66	12	10	66	10	17	175	11	5	140	22
Total Analysis Volume [veh/h]	32	262	46	40	264	40	66	698	42	18	560	86
Pedestrian Volume [ped/h]	0			0			0			0		
Bicycle Volume [bicycles/h]	0			0			0			0		

Intersection Settings

Cycle Length [s]	100
Lost time [s]	10.00

Phasing & Timing

Control Type	Permiss	Permiss	Permiss	Permiss	Permiss	Permiss	Permiss	Permiss	Permiss	Permiss	Permiss	Permiss
Signal group	0	1	0	0	1	0	0	1	0	0	1	0
Auxiliary Signal Groups												
Lead / Lag	-	-	-	-	-	-	-	-	-	-	-	-

Movement, Approach, & Intersection Results

V/C, Movement V/C Ratio	0.02	0.21	0.21	0.03	0.22	0.22	0.04	0.23	0.23	0.01	0.21	0.21
Intersection LOS	A											
Intersection V/C	0.586											

Intersection Level Of Service Report
Intersection 15: Broadway and Kenwood St

Control Type:	Signalized	Delay (sec / veh):	-
Analysis Method:	ICU 1	Level Of Service:	A
Analysis Period:	15 minutes	Volume to Capacity (v/c):	0.425

Intersection Setup

Name	Kenwood St			Kenwood St			Broadway			Broadway		
Approach	Northbound			Southbound			Eastbound			Westbound		
Lane Configuration												
Turning Movement	Left	Thru	Right	Left	Thru	Right	Left	Thru	Right	Left	Thru	Right
Lane Width [ft]	12.00	12.00	12.00	12.00	12.00	12.00	12.00	12.00	12.00	12.00	12.00	12.00
No. of Lanes in Pocket	0	0	0	0	0	0	0	0	0	0	0	0
Pocket Length [ft]	100.00	100.00	100.00	100.00	100.00	100.00	100.00	100.00	100.00	100.00	100.00	100.00
Speed [mph]	30.00			30.00			30.00			30.00		
Grade [%]	0.00			0.00			0.00			0.00		
Crosswalk	Yes			Yes			Yes			Yes		

Volumes

Name	Kenwood St			Kenwood St			Broadway			Broadway		
Base Volume Input [veh/h]	23	69	26	25	41	48	40	660	18	13	530	32
Base Volume Adjustment Factor	1.0000	1.0000	1.0000	1.0000	1.0000	1.0000	1.0000	1.0000	1.0000	1.0000	1.0000	1.0000
Heavy Vehicles Percentage [%]	2.00	2.00	2.00	2.00	2.00	2.00	2.00	2.00	2.00	2.00	2.00	2.00
Growth Rate	1.01	1.01	1.01	1.01	1.01	1.01	1.01	1.01	1.01	1.01	1.01	1.01
In-Process Volume [veh/h]	0	0	0	0	0	0	0	0	0	0	0	0
Site-Generated Trips [veh/h]	0	0	0	0	0	0	0	0	0	0	0	0
Diverted Trips [veh/h]	0	0	0	0	0	0	0	0	0	0	0	0
Pass-by Trips [veh/h]	0	0	0	0	0	0	0	0	0	0	0	0
Existing Site Adjustment Volume [veh/h]	0	0	0	0	0	0	0	0	0	0	0	0
Other Volume [veh/h]	0	0	0	0	0	0	0	0	0	0	0	0
Total Hourly Volume [veh/h]	23	70	26	25	41	48	40	667	18	13	535	32
Peak Hour Factor	1.0000	1.0000	1.0000	1.0000	1.0000	1.0000	1.0000	1.0000	1.0000	1.0000	1.0000	1.0000
Other Adjustment Factor	1.0000	1.0000	1.0000	1.0000	1.0000	1.0000	1.0000	1.0000	1.0000	1.0000	1.0000	1.0000
Total 15-Minute Volume [veh/h]	6	18	7	6	10	12	10	167	5	3	134	8
Total Analysis Volume [veh/h]	23	70	26	25	41	48	40	667	18	13	535	32
Pedestrian Volume [ped/h]	0			0			0			0		
Bicycle Volume [bicycles/h]	0			0			0			0		

Intersection Settings

Cycle Length [s]	100
Lost time [s]	10.00

Phasing & Timing

Control Type	Permiss	Permiss	Permiss	Permiss	Permiss	Permiss	Permiss	Permiss	Permiss	Permiss	Permiss	Permiss
Signal group	0	1	0	0	1	0	0	1	0	0	1	0
Auxiliary Signal Groups												
Lead / Lag	-	-	-	-	-	-	-	-	-	-	-	-

Movement, Approach, & Intersection Results

V/C, Movement V/C Ratio	0.01	0.07	0.07	0.02	0.07	0.07	0.03	0.23	0.23	0.01	0.18	0.18
Intersection LOS	A											
Intersection V/C	0.425											

Intersection Level Of Service Report
Intersection 16: Broadway & Jackon St

Control Type:	Signalized	Delay (sec / veh):	-
Analysis Method:	ICU 1	Level Of Service:	A
Analysis Period:	15 minutes	Volume to Capacity (v/c):	0.523

Intersection Setup

Name	Jackson St			Jackson St			Broadway			Broadway		
Approach	Northbound			Southbound			Eastbound			Westbound		
Lane Configuration												
Turning Movement	Left	Thru	Right	Left	Thru	Right	Left	Thru	Right	Left	Thru	Right
Lane Width [ft]	12.00	12.00	12.00	12.00	12.00	12.00	12.00	12.00	12.00	12.00	12.00	12.00
No. of Lanes in Pocket	0	0	0	0	0	0	0	0	0	0	0	0
Pocket Length [ft]	100.00	100.00	100.00	100.00	100.00	100.00	100.00	100.00	100.00	100.00	100.00	100.00
Speed [mph]	30.00			30.00			30.00			30.00		
Grade [%]	0.00			0.00			0.00			0.00		
Crosswalk	Yes			Yes			Yes			Yes		

Volumes

Name	Jackson St			Jackson St			Broadway			Broadway		
Base Volume Input [veh/h]	26	168	41	65	141	39	36	639	18	24	531	58
Base Volume Adjustment Factor	1.0000	1.0000	1.0000	1.0000	1.0000	1.0000	1.0000	1.0000	1.0000	1.0000	1.0000	1.0000
Heavy Vehicles Percentage [%]	2.00	2.00	2.00	2.00	2.00	2.00	2.00	2.00	2.00	2.00	2.00	2.00
Growth Rate	1.01	1.01	1.01	1.01	1.01	1.01	1.01	1.01	1.01	1.01	1.01	1.01
In-Process Volume [veh/h]	0	0	0	0	0	0	0	0	0	0	0	0
Site-Generated Trips [veh/h]	0	0	0	0	0	0	0	0	0	0	0	0
Diverted Trips [veh/h]	0	0	0	0	0	0	0	0	0	0	0	0
Pass-by Trips [veh/h]	0	0	0	0	0	0	0	0	0	0	0	0
Existing Site Adjustment Volume [veh/h]	0	0	0	0	0	0	0	0	0	0	0	0
Other Volume [veh/h]	0	0	0	0	0	0	0	0	0	0	0	0
Total Hourly Volume [veh/h]	26	170	41	66	142	39	36	645	18	24	536	59
Peak Hour Factor	1.0000	1.0000	1.0000	1.0000	1.0000	1.0000	1.0000	1.0000	1.0000	1.0000	1.0000	1.0000
Other Adjustment Factor	1.0000	1.0000	1.0000	1.0000	1.0000	1.0000	1.0000	1.0000	1.0000	1.0000	1.0000	1.0000
Total 15-Minute Volume [veh/h]	7	43	10	17	36	10	9	161	5	6	134	15
Total Analysis Volume [veh/h]	26	170	41	66	142	39	36	645	18	24	536	59
Pedestrian Volume [ped/h]	0			0			0			0		
Bicycle Volume [bicycles/h]	0			0			0			0		

Intersection Settings

Cycle Length [s]	100
Lost time [s]	10.00

Phasing & Timing

Control Type	Permiss	Permiss	Permiss	Permiss	Permiss	Permiss	Permiss	Permiss	Permiss	Permiss	Permiss	Permiss
Signal group	0	1	0	0	1	0	0	1	0	0	1	0
Auxiliary Signal Groups												
Lead / Lag	-	-	-	-	-	-	-	-	-	-	-	-

Movement, Approach, & Intersection Results

V/C, Movement V/C Ratio	0.02	0.15	0.15	0.04	0.11	0.11	0.02	0.22	0.22	0.02	0.19	0.19
Intersection LOS	A											
Intersection V/C	0.523											

Intersection Level Of Service Report
Intersection 1: Brand Blvd & California Ave

Control Type:	Signalized	Delay (sec / veh):	-
Analysis Method:	ICU 1	Level Of Service:	B
Analysis Period:	15 minutes	Volume to Capacity (v/c):	0.649

Intersection Setup

Name	Brand Blvd			Brand Blvd			California Ave			Calfornia Ave		
Approach	Northbound			Southbound			Eastbound			Westbound		
Lane Configuration												
Turning Movement	Left	Thru	Right	Left	Thru	Right	Left	Thru	Right	Left	Thru	Right
Lane Width [ft]	12.00	12.00	12.00	12.00	12.00	12.00	12.00	12.00	12.00	12.00	12.00	12.00
No. of Lanes in Pocket	0	0	0	0	0	0	0	0	0	0	0	0
Pocket Length [ft]	100.00	100.00	100.00	100.00	100.00	100.00	100.00	100.00	100.00	100.00	100.00	100.00
Speed [mph]	30.00			30.00			30.00			30.00		
Grade [%]	0.00			0.00			0.00			0.00		
Crosswalk	Yes			Yes			Yes			Yes		

Volumes

Name	Brand Blvd			Brand Blvd			California Ave			Calfornia Ave		
Base Volume Input [veh/h]	62	645	67	68	762	99	47	218	57	42	202	83
Base Volume Adjustment Factor	1.0000	1.0000	1.0000	1.0000	1.0000	1.0000	1.0000	1.0000	1.0000	1.0000	1.0000	1.0000
Heavy Vehicles Percentage [%]	2.00	2.00	2.00	2.00	2.00	2.00	2.00	2.00	2.00	2.00	2.00	2.00
Growth Rate	1.02	1.02	1.02	1.02	1.02	1.02	1.02	1.02	1.02	1.02	1.02	1.02
In-Process Volume [veh/h]	0	0	0	0	0	0	0	0	0	0	0	0
Site-Generated Trips [veh/h]	0	0	0	8	0	0	0	1	0	0	-1	-4
Diverted Trips [veh/h]	0	0	0	0	0	0	0	0	0	0	0	0
Pass-by Trips [veh/h]	0	0	0	0	0	0	0	0	0	0	0	0
Existing Site Adjustment Volume [veh/h]	0	0	0	0	0	0	0	0	0	0	0	0
Other Volume [veh/h]	0	0	0	0	0	0	0	0	0	0	0	0
Total Hourly Volume [veh/h]	63	658	68	77	777	101	48	223	58	43	205	81
Peak Hour Factor	1.0000	1.0000	1.0000	1.0000	1.0000	1.0000	1.0000	1.0000	1.0000	1.0000	1.0000	1.0000
Other Adjustment Factor	1.0000	1.0000	1.0000	1.0000	1.0000	1.0000	1.0000	1.0000	1.0000	1.0000	1.0000	1.0000
Total 15-Minute Volume [veh/h]	16	165	17	19	194	25	12	56	15	11	51	20
Total Analysis Volume [veh/h]	63	658	68	77	777	101	48	223	58	43	205	81
Pedestrian Volume [ped/h]	0			0			0			0		
Bicycle Volume [bicycles/h]	0			0			0			0		

Intersection Settings

Cycle Length [s]	100
Lost time [s]	10.00

Phasing & Timing

Control Type	Protecte	Permiss	Permiss	Protecte	Permiss	Permiss	Permiss	Permiss	Permiss	Permiss	Permiss	Permiss
Signal group	1	1	0	1	1	0	0	1	0	0	1	0
Auxiliary Signal Groups												
Lead / Lag	Lag	-	-	Lag	-	-	-	-	-	-	-	-

Movement, Approach, & Intersection Results

V/C, Movement V/C Ratio	0.04	0.23	0.23	0.05	0.27	0.27	0.03	0.21	0.21	0.03	0.21	0.21
Intersection LOS	B											
Intersection V/C	0.649											

Intersection Level Of Service Report
Intersection 2: California Ave & Maryland Ave

Control Type:	Signalized	Delay (sec / veh):	-
Analysis Method:	ICU 1	Level Of Service:	B
Analysis Period:	15 minutes	Volume to Capacity (v/c):	0.616

Intersection Setup

Name	Maryland Ave			Maryland Ave			Calfornia Ave			California Ave		
Approach	Northbound			Southbound			Eastbound			Westbound		
Lane Configuration												
Turning Movement	Left	Thru	Right	Left	Thru	Right	Left	Thru	Right	Left	Thru	Right
Lane Width [ft]	12.00	12.00	12.00	12.00	12.00	12.00	12.00	12.00	12.00	12.00	12.00	12.00
No. of Lanes in Pocket	0	0	0	0	0	0	0	0	0	0	0	0
Pocket Length [ft]	100.00	100.00	100.00	100.00	100.00	100.00	100.00	100.00	100.00	100.00	100.00	100.00
Speed [mph]	30.00			30.00			30.00			30.00		
Grade [%]	0.00			0.00			0.00			0.00		
Crosswalk	Yes			Yes			Yes			Yes		

Volumes

Name	Maryland Ave			Maryland Ave			Calfornia Ave			California Ave		
Base Volume Input [veh/h]	80	221	47	15	75	33	23	239	50	16	258	47
Base Volume Adjustment Factor	1.0000	1.0000	1.0000	1.0000	1.0000	1.0000	1.0000	1.0000	1.0000	1.0000	1.0000	1.0000
Heavy Vehicles Percentage [%]	2.00	2.00	2.00	2.00	2.00	2.00	2.00	2.00	2.00	2.00	2.00	2.00
Growth Rate	1.02	1.02	1.02	1.02	1.02	1.02	1.02	1.02	1.02	1.02	1.02	1.02
In-Process Volume [veh/h]	0	0	0	0	0	0	0	0	0	0	0	0
Site-Generated Trips [veh/h]	0	0	0	0	0	0	0	9	0	0	-5	0
Diverted Trips [veh/h]	0	0	0	0	0	0	0	0	0	0	0	0
Pass-by Trips [veh/h]	0	0	0	0	0	0	0	0	0	0	0	0
Existing Site Adjustment Volume [veh/h]	0	0	0	0	0	0	0	0	0	0	0	0
Other Volume [veh/h]	0	0	0	0	0	0	0	0	0	0	0	0
Total Hourly Volume [veh/h]	82	225	48	15	77	34	23	253	51	16	258	48
Peak Hour Factor	1.0000	1.0000	1.0000	1.0000	1.0000	1.0000	1.0000	1.0000	1.0000	1.0000	1.0000	1.0000
Other Adjustment Factor	1.0000	1.0000	1.0000	1.0000	1.0000	1.0000	1.0000	1.0000	1.0000	1.0000	1.0000	1.0000
Total 15-Minute Volume [veh/h]	21	56	12	4	19	9	6	63	13	4	65	12
Total Analysis Volume [veh/h]	82	225	48	15	77	34	23	253	51	16	258	48
Pedestrian Volume [ped/h]	0			0			0			0		
Bicycle Volume [bicycles/h]	0			0			0			0		

Intersection Settings

Cycle Length [s]	100
Lost time [s]	10.00

Phasing & Timing

Control Type	Split	Split	Split	Split	Split	Split	Permiss	Permiss	Permiss	Permiss	Permiss	Permiss
Signal group	0	1	0	0	1	0	0	1	0	0	1	0
Auxiliary Signal Groups												
Lead / Lag	-	-	-	-	-	-	-	-	-	-	-	-

Movement, Approach, & Intersection Results

V/C, Movement V/C Ratio	0.05	0.22	0.22	0.01	0.08	0.08	0.01	0.17	0.03	0.01	0.20	0.20
Intersection LOS	B											
Intersection V/C	0.616											

Intersection Level Of Service Report
Intersection 3: California Ave & Louise St

Control Type:	All-way stop	Delay (sec / veh):	28.3
Analysis Method:	HCM 2010	Level Of Service:	D
Analysis Period:	15 minutes	Volume to Capacity (v/c):	0.801

Intersection Setup

Name	Louise St			Louise St			California Ave			California Ave		
Approach	Northbound			Southbound			Eastbound			Westbound		
Lane Configuration												
Turning Movement	Left	Thru	Right	Left	Thru	Right	Left	Thru	Right	Left	Thru	Right
Lane Width [ft]	12.00	12.00	12.00	12.00	12.00	12.00	12.00	12.00	12.00	12.00	12.00	12.00
No. of Lanes in Pocket	0	0	0	0	0	0	0	0	0	0	0	0
Pocket Length [ft]	100.00	100.00	100.00	100.00	100.00	100.00	100.00	100.00	100.00	100.00	100.00	100.00
Speed [mph]	30.00			30.00			30.00			30.00		
Grade [%]	0.00			0.00			0.00			0.00		
Crosswalk	Yes			Yes			Yes			Yes		

Volumes

Name	Louise St			Louise St			California Ave			California Ave		
Base Volume Input [veh/h]	34	266	40	60	244	30	28	311	36	18	217	35
Base Volume Adjustment Factor	1.0000	1.0000	1.0000	1.0000	1.0000	1.0000	1.0000	1.0000	1.0000	1.0000	1.0000	1.0000
Heavy Vehicles Percentage [%]	2.00	2.00	2.00	2.00	2.00	2.00	2.00	2.00	2.00	2.00	2.00	2.00
Growth Rate	1.01	1.01	1.01	1.01	1.01	1.01	1.01	1.01	1.01	1.01	1.01	1.01
In-Process Volume [veh/h]	0	0	0	0	0	0	0	0	0	0	0	0
Site-Generated Trips [veh/h]	0	0	0	0	0	0	0	9	0	0	-5	0
Diverted Trips [veh/h]	0	0	0	0	0	0	0	0	0	0	0	0
Pass-by Trips [veh/h]	0	0	0	0	0	0	0	0	0	0	0	0
Existing Site Adjustment Volume [veh/h]	0	0	0	0	0	0	0	0	0	0	0	0
Other Volume [veh/h]	0	0	0	0	0	0	0	0	0	0	0	0
Total Hourly Volume [veh/h]	34	269	40	61	246	30	28	323	36	18	214	35
Peak Hour Factor	1.0000	1.0000	1.0000	1.0000	1.0000	1.0000	1.0000	1.0000	1.0000	1.0000	1.0000	1.0000
Other Adjustment Factor	1.0000	1.0000	1.0000	1.0000	1.0000	1.0000	1.0000	1.0000	1.0000	1.0000	1.0000	1.0000
Total 15-Minute Volume [veh/h]	9	67	10	15	62	8	7	81	9	5	54	9
Total Analysis Volume [veh/h]	34	269	40	61	246	30	28	323	36	18	214	35
Pedestrian Volume [ped/h]	0			0			0			0		

Intersection Settings

Lanes

Capacity per Entry Lane [veh/h]	475	472	483	458
Degree of Utilization, x	0.72	0.71	0.80	0.58

Movement, Approach, & Intersection Results

95th-Percentile Queue Length [veh]	5.78	5.62	7.45	3.63
95th-Percentile Queue Length [ft]	144.40	140.53	186.36	90.83
Approach Delay [s/veh]	27.89	27.48	34.17	21.23
Approach LOS	D	D	D	C
Intersection Delay [s/veh]	28.28			
Intersection LOS	D			

Intersection Level Of Service Report
Intersection 4: California Ave & Kenwood St

Control Type:	All-way stop	Delay (sec / veh):	12.6
Analysis Method:	HCM 2010	Level Of Service:	B
Analysis Period:	15 minutes	Volume to Capacity (v/c):	0.552

Intersection Setup

Name	Kenwood St			Kenwood St			California Ave			California Ave		
Approach	Northbound			Southbound			Eastbound			Westbound		
Lane Configuration												
Turning Movement	Left	Thru	Right	Left	Thru	Right	Left	Thru	Right	Left	Thru	Right
Lane Width [ft]	12.00	12.00	12.00	12.00	12.00	12.00	12.00	12.00	12.00	12.00	12.00	12.00
No. of Lanes in Pocket	0	0	0	0	0	0	0	0	0	0	0	0
Pocket Length [ft]	100.00	100.00	100.00	100.00	100.00	100.00	100.00	100.00	100.00	100.00	100.00	100.00
Speed [mph]	30.00			30.00			30.00			30.00		
Grade [%]	0.00			0.00			0.00			0.00		
Crosswalk	Yes			Yes			Yes			Yes		

Volumes

Name	Kenwood St			Kenwood St			California Ave			California Ave		
Base Volume Input [veh/h]	40	91	36	10	61	12	18	337	21	9	276	12
Base Volume Adjustment Factor	1.0000	1.0000	1.0000	1.0000	1.0000	1.0000	1.0000	1.0000	1.0000	1.0000	1.0000	1.0000
Heavy Vehicles Percentage [%]	2.00	2.00	2.00	2.00	2.00	2.00	2.00	2.00	2.00	2.00	2.00	2.00
Growth Rate	1.01	1.01	1.01	1.01	1.01	1.01	1.01	1.01	1.01	1.01	1.01	1.01
In-Process Volume [veh/h]	0	0	0	0	0	0	0	0	0	0	0	0
Site-Generated Trips [veh/h]	0	0	0	0	0	0	0	9	0	0	-5	0
Diverted Trips [veh/h]	0	0	0	0	0	0	0	0	0	0	0	0
Pass-by Trips [veh/h]	0	0	0	0	0	0	0	0	0	0	0	0
Existing Site Adjustment Volume [veh/h]	0	0	0	0	0	0	0	0	0	0	0	0
Other Volume [veh/h]	0	0	0	0	0	0	0	0	0	0	0	0
Total Hourly Volume [veh/h]	40	92	36	10	62	12	18	349	21	9	274	12
Peak Hour Factor	1.0000	1.0000	1.0000	1.0000	1.0000	1.0000	1.0000	1.0000	1.0000	1.0000	1.0000	1.0000
Other Adjustment Factor	1.0000	1.0000	1.0000	1.0000	1.0000	1.0000	1.0000	1.0000	1.0000	1.0000	1.0000	1.0000
Total 15-Minute Volume [veh/h]	10	23	9	3	16	3	5	87	5	2	69	3
Total Analysis Volume [veh/h]	40	92	36	10	62	12	18	349	21	9	274	12
Pedestrian Volume [ped/h]	0			0			0			0		

Intersection Settings

Lanes

Capacity per Entry Lane [veh/h]	621	599	703	685
Degree of Utilization, x	0.27	0.14	0.55	0.43

Movement, Approach, & Intersection Results

95th-Percentile Queue Length [veh]	1.09	0.49	3.40	2.17
95th-Percentile Queue Length [ft]	27.28	12.14	85.08	54.29
Approach Delay [s/veh]	10.93	9.99	14.25	12.17
Approach LOS	B	A	B	B
Intersection Delay [s/veh]	12.61			
Intersection LOS	B			

Intersection Level Of Service Report
Intersection 5: California Ave & Jackson St

Control Type:	All-way stop	Delay (sec / veh):	58.6
Analysis Method:	HCM 2010	Level Of Service:	F
Analysis Period:	15 minutes	Volume to Capacity (v/c):	0.974

Intersection Setup

Name	Jackson St			Jackson St			California Ave			California Ave		
Approach	Northbound			Southbound			Eastbound			Westbound		
Lane Configuration												
Turning Movement	Left	Thru	Right	Left	Thru	Right	Left	Thru	Right	Left	Thru	Right
Lane Width [ft]	12.00	12.00	12.00	12.00	12.00	12.00	12.00	12.00	12.00	12.00	12.00	12.00
No. of Lanes in Pocket	0	0	0	0	0	0	0	0	0	0	0	0
Pocket Length [ft]	100.00	100.00	100.00	100.00	100.00	100.00	100.00	100.00	100.00	100.00	100.00	100.00
Speed [mph]	30.00			30.00			30.00			30.00		
Grade [%]	0.00			0.00			0.00			0.00		
Crosswalk	Yes			Yes			Yes			Yes		

Volumes

Name	Jackson St			Jackson St			California Ave			California Ave		
Base Volume Input [veh/h]	23	301	58	62	243	15	19	345	15	18	269	62
Base Volume Adjustment Factor	1.0000	1.0000	1.0000	1.0000	1.0000	1.0000	1.0000	1.0000	1.0000	1.0000	1.0000	1.0000
Heavy Vehicles Percentage [%]	2.00	2.00	2.00	2.00	2.00	2.00	2.00	2.00	2.00	2.00	2.00	2.00
Growth Rate	1.01	1.01	1.01	1.01	1.01	1.01	1.01	1.01	1.01	1.01	1.01	1.01
In-Process Volume [veh/h]	0	0	0	0	0	0	0	0	0	0	0	0
Site-Generated Trips [veh/h]	-5	-4	-1	0	9	0	0	0	9	2	0	0
Diverted Trips [veh/h]	0	0	0	0	0	0	0	0	0	0	0	0
Pass-by Trips [veh/h]	0	0	0	0	0	0	0	0	0	0	0	0
Existing Site Adjustment Volume [veh/h]	0	0	0	0	0	0	0	0	0	0	0	0
Other Volume [veh/h]	0	0	0	0	0	0	0	0	0	0	0	0
Total Hourly Volume [veh/h]	18	300	58	63	254	15	19	348	24	20	272	63
Peak Hour Factor	1.0000	1.0000	1.0000	1.0000	1.0000	1.0000	1.0000	1.0000	1.0000	1.0000	1.0000	1.0000
Other Adjustment Factor	1.0000	1.0000	1.0000	1.0000	1.0000	1.0000	1.0000	1.0000	1.0000	1.0000	1.0000	1.0000
Total 15-Minute Volume [veh/h]	5	75	15	16	64	4	5	87	6	5	68	16
Total Analysis Volume [veh/h]	18	300	58	63	254	15	19	348	24	20	272	63
Pedestrian Volume [ped/h]	0			0			0			0		

Intersection Settings

Lanes

Capacity per Entry Lane [veh/h]	400	387	401	396
Degree of Utilization, x	0.94	0.86	0.97	0.90

Movement, Approach, & Intersection Results

95th-Percentile Queue Length [veh]	10.47	8.24	11.48	9.25
95th-Percentile Queue Length [ft]	261.71	205.92	287.08	231.19
Approach Delay [s/veh]	61.66	48.24	69.19	53.59
Approach LOS	F	E	F	F
Intersection Delay [s/veh]	58.65			
Intersection LOS	F			

Intersection Level Of Service Report
Intersection 6: Wilson Ave & Brand Blvd

Control Type:	Signalized	Delay (sec / veh):	-
Analysis Method:	ICU 1	Level Of Service:	B
Analysis Period:	15 minutes	Volume to Capacity (v/c):	0.640

Intersection Setup

Name	Brand Blvd			Brand Blvd			Wilson Ave			Wilson Ave		
Approach	Northbound			Southbound			Eastbound			Westbound		
Lane Configuration												
Turning Movement	Left	Thru	Right	Left	Thru	Right	Left	Thru	Right	Left	Thru	Right
Lane Width [ft]	12.00	12.00	12.00	12.00	12.00	12.00	12.00	12.00	12.00	12.00	12.00	12.00
No. of Lanes in Pocket	0	0	0	0	0	0	0	0	0	0	0	0
Pocket Length [ft]	100.00	100.00	100.00	100.00	100.00	100.00	100.00	100.00	100.00	100.00	100.00	100.00
Speed [mph]	30.00			30.00			30.00			30.00		
Grade [%]	0.00			0.00			0.00			0.00		
Crosswalk	Yes			Yes			Yes			Yes		

Volumes

Name	Brand Blvd			Brand Blvd			Wilson Ave			Wilson Ave		
Base Volume Input [veh/h]	64	541	51	98	726	74	35	286	79	98	316	94
Base Volume Adjustment Factor	1.0000	1.0000	1.0000	1.0000	1.0000	1.0000	1.0000	1.0000	1.0000	1.0000	1.0000	1.0000
Heavy Vehicles Percentage [%]	2.00	2.00	2.00	2.00	2.00	2.00	2.00	2.00	2.00	2.00	2.00	2.00
Growth Rate	1.02	1.02	1.02	1.02	1.02	1.02	1.02	1.02	1.02	1.02	1.02	1.02
In-Process Volume [veh/h]	0	0	0	0	0	0	0	0	0	0	0	0
Site-Generated Trips [veh/h]	0	0	7	0	0	0	0	2	0	-3	-1	0
Diverted Trips [veh/h]	0	0	0	0	0	0	0	0	0	0	0	0
Pass-by Trips [veh/h]	0	0	0	0	0	0	0	0	0	0	0	0
Existing Site Adjustment Volume [veh/h]	0	0	0	0	0	0	0	0	0	0	0	0
Other Volume [veh/h]	0	0	0	0	0	0	0	0	0	0	0	0
Total Hourly Volume [veh/h]	65	552	59	100	741	75	36	294	81	97	321	96
Peak Hour Factor	1.0000	1.0000	1.0000	1.0000	1.0000	1.0000	1.0000	1.0000	1.0000	1.0000	1.0000	1.0000
Other Adjustment Factor	1.0000	1.0000	1.0000	1.0000	1.0000	1.0000	1.0000	1.0000	1.0000	1.0000	1.0000	1.0000
Total 15-Minute Volume [veh/h]	16	138	15	25	185	19	9	74	20	24	80	24
Total Analysis Volume [veh/h]	65	552	59	100	741	75	36	294	81	97	321	96
Pedestrian Volume [ped/h]	0			0			0			0		
Bicycle Volume [bicycles/h]	0			0			0			0		

Intersection Settings

Cycle Length [s]	100
Lost time [s]	10.00

Phasing & Timing

Control Type	Protecte	Permiss	Permiss	Protecte	Permiss	Permiss	Permiss	Permiss	Permiss	Permiss	Permiss	Permiss
Signal group	1	1	0	1	1	0	0	1	0	0	1	0
Auxiliary Signal Groups												
Lead / Lag	Lag	-	-	Lag	-	-	-	-	-	-	-	-

Movement, Approach, & Intersection Results

V/C, Movement V/C Ratio	0.04	0.19	0.19	0.06	0.26	0.26	0.02	0.18	0.05	0.06	0.20	0.06
Intersection LOS	B											
Intersection V/C	0.640											

Intersection Level Of Service Report
Intersection 7: Wilson Ave & Maryland Ave

Control Type:	Signalized	Delay (sec / veh):	-
Analysis Method:	ICU 1	Level Of Service:	A
Analysis Period:	15 minutes	Volume to Capacity (v/c):	0.539

Intersection Setup

Name	Maryland Ave			Maryland Ave			Wilson Ave			Wilson Ave		
Approach	Northbound			Southbound			Eastbound			Westbound		
Lane Configuration												
Turning Movement	Left	Thru	Right	Left	Thru	Right	Left	Thru	Right	Left	Thru	Right
Lane Width [ft]	12.00	12.00	12.00	12.00	12.00	12.00	12.00	12.00	12.00	12.00	12.00	12.00
No. of Lanes in Pocket	0	0	0	0	0	0	0	0	0	0	0	0
Pocket Length [ft]	100.00	100.00	100.00	100.00	100.00	100.00	100.00	100.00	100.00	100.00	100.00	100.00
Speed [mph]	30.00			30.00			30.00			30.00		
Grade [%]	0.00			0.00			0.00			0.00		
Crosswalk	Yes			Yes			Yes			Yes		

Volumes

Name	Maryland Ave			Maryland Ave			Wilson Ave			Wilson Ave		
Base Volume Input [veh/h]	78	27	84	136	63	75	20	362	41	16	375	49
Base Volume Adjustment Factor	1.0000	1.0000	1.0000	1.0000	1.0000	1.0000	1.0000	1.0000	1.0000	1.0000	1.0000	1.0000
Heavy Vehicles Percentage [%]	2.00	2.00	2.00	2.00	2.00	2.00	2.00	2.00	2.00	2.00	2.00	2.00
Growth Rate	1.02	1.02	1.02	1.02	1.02	1.02	1.02	1.02	1.02	1.02	1.02	1.02
In-Process Volume [veh/h]	0	0	0	0	0	0	0	0	0	0	0	0
Site-Generated Trips [veh/h]	0	0	0	0	0	0	0	9	0	0	-4	0
Diverted Trips [veh/h]	0	0	0	0	0	0	0	0	0	0	0	0
Pass-by Trips [veh/h]	0	0	0	0	0	0	0	0	0	0	0	0
Existing Site Adjustment Volume [veh/h]	0	0	0	0	0	0	0	0	0	0	0	0
Other Volume [veh/h]	0	0	0	0	0	0	0	0	0	0	0	0
Total Hourly Volume [veh/h]	80	28	86	139	64	77	20	378	42	16	379	50
Peak Hour Factor	1.0000	1.0000	1.0000	1.0000	1.0000	1.0000	1.0000	1.0000	1.0000	1.0000	1.0000	1.0000
Other Adjustment Factor	1.0000	1.0000	1.0000	1.0000	1.0000	1.0000	1.0000	1.0000	1.0000	1.0000	1.0000	1.0000
Total 15-Minute Volume [veh/h]	20	7	22	35	16	19	5	95	11	4	95	13
Total Analysis Volume [veh/h]	80	28	86	139	64	77	20	378	42	16	379	50
Pedestrian Volume [ped/h]	0			0			0			0		
Bicycle Volume [bicycles/h]	0			0			0			0		

Intersection Settings

Cycle Length [s]	100
Lost time [s]	10.00

Phasing & Timing

Control Type	Permiss	Permiss	Permiss	Permiss	Permiss	Permiss	Permiss	Permiss	Permiss	Permiss	Permiss	Permiss
Signal group	0	1	0	0	1	0	0	1	0	0	1	0
Auxiliary Signal Groups												
Lead / Lag	-	-	-	-	-	-	-	-	-	-	-	-

Movement, Approach, & Intersection Results

V/C, Movement V/C Ratio	0.05	0.07	0.07	0.09	0.09	0.09	0.01	0.26	0.26	0.01	0.27	0.27
Intersection LOS	A											
Intersection V/C	0.539											

Intersection Level Of Service Report
Intersection 8: Wilson Ave & Louise St

Control Type:	Signalized	Delay (sec / veh):	-
Analysis Method:	ICU 1	Level Of Service:	D
Analysis Period:	15 minutes	Volume to Capacity (v/c):	0.818

Intersection Setup

Name	Louise St			Louise St			Wilson Ave			Wilson Ave		
Approach	Northbound			Southbound			Eastbound			Westbound		
Lane Configuration												
Turning Movement	Left	Thru	Right	Left	Thru	Right	Left	Thru	Right	Left	Thru	Right
Lane Width [ft]	12.00	12.00	12.00	12.00	12.00	12.00	12.00	12.00	12.00	12.00	12.00	12.00
No. of Lanes in Pocket	0	0	0	0	0	0	0	0	0	0	0	0
Pocket Length [ft]	100.00	100.00	100.00	100.00	100.00	100.00	100.00	100.00	100.00	100.00	100.00	100.00
Speed [mph]	30.00			30.00			30.00			30.00		
Grade [%]	0.00			0.00			0.00			0.00		
Crosswalk	Yes			Yes			Yes			Yes		

Volumes

Name	Louise St			Louise St			Wilson Ave			Wilson Ave		
Base Volume Input [veh/h]	27	342	81	46	240	37	28	501	99	34	347	41
Base Volume Adjustment Factor	1.0000	1.0000	1.0000	1.0000	1.0000	1.0000	1.0000	1.0000	1.0000	1.0000	1.0000	1.0000
Heavy Vehicles Percentage [%]	2.00	2.00	2.00	2.00	2.00	2.00	2.00	2.00	2.00	2.00	2.00	2.00
Growth Rate	1.01	1.01	1.01	1.01	1.01	1.01	1.01	1.01	1.01	1.01	1.01	1.01
In-Process Volume [veh/h]	0	0	0	0	0	0	0	0	0	0	0	0
Site-Generated Trips [veh/h]	0	0	0	0	0	0	0	9	0	0	-4	0
Diverted Trips [veh/h]	0	0	0	0	0	0	0	0	0	0	0	0
Pass-by Trips [veh/h]	0	0	0	0	0	0	0	0	0	0	0	0
Existing Site Adjustment Volume [veh/h]	0	0	0	0	0	0	0	0	0	0	0	0
Other Volume [veh/h]	0	0	0	0	0	0	0	0	0	0	0	0
Total Hourly Volume [veh/h]	27	345	82	46	242	37	28	515	100	34	346	41
Peak Hour Factor	1.0000	1.0000	1.0000	1.0000	1.0000	1.0000	1.0000	1.0000	1.0000	1.0000	1.0000	1.0000
Other Adjustment Factor	1.0000	1.0000	1.0000	1.0000	1.0000	1.0000	1.0000	1.0000	1.0000	1.0000	1.0000	1.0000
Total 15-Minute Volume [veh/h]	7	86	21	12	61	9	7	129	25	9	87	10
Total Analysis Volume [veh/h]	27	345	82	46	242	37	28	515	100	34	346	41
Pedestrian Volume [ped/h]	0			0			0			0		
Bicycle Volume [bicycles/h]	0			0			0			0		

Intersection Settings

Cycle Length [s]	100
Lost time [s]	10.00

Phasing & Timing

Control Type	Permiss	Permiss	Permiss	Permiss	Permiss	Permiss	Permiss	Permiss	Permiss	Permiss	Permiss	Permiss
Signal group	0	1	0	0	1	0	0	1	0	0	1	0
Auxiliary Signal Groups												
Lead / Lag	-	-	-	-	-	-	-	-	-	-	-	-

Movement, Approach, & Intersection Results

V/C, Movement V/C Ratio	0.02	0.28	0.28	0.03	0.20	0.20	0.02	0.38	0.38	0.02	0.24	0.24
Intersection LOS	D											
Intersection V/C	0.818											

Intersection Level Of Service Report
Intersection 9: Wilson Ave & Kenwood St

Control Type:	Signalized	Delay (sec / veh):	-
Analysis Method:	ICU 1	Level Of Service:	B
Analysis Period:	15 minutes	Volume to Capacity (v/c):	0.607

Intersection Setup

Name	Kenwood St			Kenwood St			Wilson Ave			Wilson Ave		
Approach	Northbound			Southbound			Eastbound			Westbound		
Lane Configuration												
Turning Movement	Left	Thru	Right	Left	Thru	Right	Left	Thru	Right	Left	Thru	Right
Lane Width [ft]	12.00	12.00	12.00	12.00	12.00	12.00	12.00	12.00	12.00	12.00	12.00	12.00
No. of Lanes in Pocket	0	0	0	0	0	0	0	0	0	0	0	0
Pocket Length [ft]	100.00	100.00	100.00	100.00	100.00	100.00	100.00	100.00	100.00	100.00	100.00	100.00
Speed [mph]	30.00			30.00			30.00			30.00		
Grade [%]	0.00			0.00			0.00			0.00		
Crosswalk	Yes			Yes			Yes			Yes		

Volumes

Name	Kenwood St			Kenwood St			Wilson Ave			Wilson Ave		
Base Volume Input [veh/h]	17	87	34	21	57	13	44	510	58	24	338	27
Base Volume Adjustment Factor	1.0000	1.0000	1.0000	1.0000	1.0000	1.0000	1.0000	1.0000	1.0000	1.0000	1.0000	1.0000
Heavy Vehicles Percentage [%]	2.00	2.00	2.00	2.00	2.00	2.00	2.00	2.00	2.00	2.00	2.00	2.00
Growth Rate	1.01	1.01	1.01	1.01	1.01	1.01	1.01	1.01	1.01	1.01	1.01	1.01
In-Process Volume [veh/h]	0	0	0	0	0	0	0	0	0	0	0	0
Site-Generated Trips [veh/h]	0	0	0	0	0	0	0	9	0	0	-4	0
Diverted Trips [veh/h]	0	0	0	0	0	0	0	0	0	0	0	0
Pass-by Trips [veh/h]	0	0	0	0	0	0	0	0	0	0	0	0
Existing Site Adjustment Volume [veh/h]	0	0	0	0	0	0	0	0	0	0	0	0
Other Volume [veh/h]	0	0	0	0	0	0	0	0	0	0	0	0
Total Hourly Volume [veh/h]	17	88	34	21	58	13	44	524	59	24	337	27
Peak Hour Factor	1.0000	1.0000	1.0000	1.0000	1.0000	1.0000	1.0000	1.0000	1.0000	1.0000	1.0000	1.0000
Other Adjustment Factor	1.0000	1.0000	1.0000	1.0000	1.0000	1.0000	1.0000	1.0000	1.0000	1.0000	1.0000	1.0000
Total 15-Minute Volume [veh/h]	4	22	9	5	15	3	11	131	15	6	84	7
Total Analysis Volume [veh/h]	17	88	34	21	58	13	44	524	59	24	337	27
Pedestrian Volume [ped/h]	0			0			0			0		
Bicycle Volume [bicycles/h]	0			0			0			0		

Intersection Settings

Cycle Length [s]	100
Lost time [s]	10.00

Phasing & Timing

Control Type	Permiss	Permiss	Permiss	Permiss	Permiss	Permiss	Permiss	Permiss	Permiss	Permiss	Permiss	Permiss
Signal group	0	1	0	0	1	0	0	1	0	0	1	0
Auxiliary Signal Groups												
Lead / Lag	-	-	-	-	-	-	-	-	-	-	-	-

Movement, Approach, & Intersection Results

V/C, Movement V/C Ratio	0.01	0.09	0.09	0.01	0.06	0.06	0.03	0.39	0.39	0.02	0.24	0.24
Intersection LOS	B											
Intersection V/C	0.607											

Intersection Level Of Service Report
Intersection 10: Wilson Ave & Jackson St

Control Type:	Signalized	Delay (sec / veh):	-
Analysis Method:	ICU 1	Level Of Service:	B
Analysis Period:	15 minutes	Volume to Capacity (v/c):	0.697

Intersection Setup

Name	Jackson St			Jackson St			Wilson Ave			Wilson Ave		
Approach	Northbound			Southbound			Eastbound			Westbound		
Lane Configuration												
Turning Movement	Left	Thru	Right	Left	Thru	Right	Left	Thru	Right	Left	Thru	Right
Lane Width [ft]	12.00	12.00	12.00	12.00	12.00	12.00	12.00	12.00	12.00	12.00	12.00	12.00
No. of Lanes in Pocket	0	0	0	0	0	0	0	0	0	0	0	0
Pocket Length [ft]	100.00	100.00	100.00	100.00	100.00	100.00	100.00	100.00	100.00	100.00	100.00	100.00
Speed [mph]	30.00			30.00			30.00			30.00		
Grade [%]	0.00			0.00			0.00			0.00		
Crosswalk	Yes			Yes			Yes			Yes		

Volumes

Name	Jackson St			Jackson St			Wilson Ave			Wilson Ave		
Base Volume Input [veh/h]	26	229	59	73	207	28	31	513	32	37	422	86
Base Volume Adjustment Factor	1.0000	1.0000	1.0000	1.0000	1.0000	1.0000	1.0000	1.0000	1.0000	1.0000	1.0000	1.0000
Heavy Vehicles Percentage [%]	2.00	2.00	2.00	2.00	2.00	2.00	2.00	2.00	2.00	2.00	2.00	2.00
Growth Rate	1.01	1.01	1.01	1.01	1.01	1.01	1.01	1.01	1.01	1.01	1.01	1.01
In-Process Volume [veh/h]	0	0	0	0	0	0	0	0	0	0	0	0
Site-Generated Trips [veh/h]	0	7	0	-4	-3	-4	9	0	0	0	0	6
Diverted Trips [veh/h]	0	0	0	0	0	0	0	0	0	0	0	0
Pass-by Trips [veh/h]	0	0	0	0	0	0	0	0	0	0	0	0
Existing Site Adjustment Volume [veh/h]	0	0	0	0	0	0	0	0	0	0	0	0
Other Volume [veh/h]	0	0	0	0	0	0	0	0	0	0	0	0
Total Hourly Volume [veh/h]	26	238	60	70	206	24	40	518	32	37	426	93
Peak Hour Factor	1.0000	1.0000	1.0000	1.0000	1.0000	1.0000	1.0000	1.0000	1.0000	1.0000	1.0000	1.0000
Other Adjustment Factor	1.0000	1.0000	1.0000	1.0000	1.0000	1.0000	1.0000	1.0000	1.0000	1.0000	1.0000	1.0000
Total 15-Minute Volume [veh/h]	7	60	15	18	52	6	10	130	8	9	107	23
Total Analysis Volume [veh/h]	26	238	60	70	206	24	40	518	32	37	426	93
Pedestrian Volume [ped/h]	0			0			0			0		
Bicycle Volume [bicycles/h]	0			0			0			0		

Intersection Settings

Cycle Length [s]	100
Lost time [s]	10.00

Phasing & Timing

Control Type	Permiss	Permiss	Permiss	Permiss	Permiss	Permiss	Permiss	Permiss	Permiss	Permiss	Permiss	Permiss
Signal group	0	1	0	0	1	0	0	1	0	0	1	0
Auxiliary Signal Groups												
Lead / Lag	-	-	-	-	-	-	-	-	-	-	-	-

Movement, Approach, & Intersection Results

V/C, Movement V/C Ratio	0.02	0.19	0.19	0.04	0.14	0.14	0.03	0.34	0.34	0.02	0.32	0.32
Intersection LOS	B											
Intersection V/C	0.697											

Intersection Level Of Service Report
Intersection 11: Wilson Ave & Glendale Ave

Control Type:	Signalized	Delay (sec / veh):	-
Analysis Method:	ICU 1	Level Of Service:	C
Analysis Period:	15 minutes	Volume to Capacity (v/c):	0.781

Intersection Setup

Name							Wilson Ave			Wilson Ave		
Approach	Northbound			Southbound			Eastbound			Westbound		
Lane Configuration												
Turning Movement	Left	Thru	Right	Left	Thru	Right	Left	Thru	Right	Left	Thru	Right
Lane Width [ft]	12.00	12.00	12.00	12.00	12.00	12.00	12.00	12.00	12.00	12.00	12.00	12.00
No. of Lanes in Pocket	0	0	0	0	0	0	0	0	0	0	0	0
Pocket Length [ft]	100.00	100.00	100.00	100.00	100.00	100.00	100.00	100.00	100.00	100.00	100.00	100.00
Speed [mph]	30.00			30.00			30.00			30.00		
Grade [%]	0.00			0.00			0.00			0.00		
Crosswalk	Yes			Yes			Yes			Yes		

Volumes

Name							Wilson Ave			Wilson Ave		
Base Volume Input [veh/h]	93	886	78	167	750	87	204	376	74	56	296	86
Base Volume Adjustment Factor	1.0000	1.0000	1.0000	1.0000	1.0000	1.0000	1.0000	1.0000	1.0000	1.0000	1.0000	1.0000
Heavy Vehicles Percentage [%]	2.00	2.00	2.00	2.00	2.00	2.00	2.00	2.00	2.00	2.00	2.00	2.00
Growth Rate	1.01	1.01	1.01	1.01	1.01	1.01	1.01	1.01	1.01	1.01	1.01	1.01
In-Process Volume [veh/h]	0	0	0	0	0	0	0	0	0	0	0	0
Site-Generated Trips [veh/h]	0	0	0	0	0	1	-1	-3	0	0	5	0
Diverted Trips [veh/h]	0	0	0	0	0	0	0	0	0	0	0	0
Pass-by Trips [veh/h]	0	0	0	0	0	0	0	0	0	0	0	0
Existing Site Adjustment Volume [veh/h]	0	0	0	0	0	0	0	0	0	0	0	0
Other Volume [veh/h]	0	0	0	0	0	0	0	0	0	0	0	0
Total Hourly Volume [veh/h]	94	895	79	169	758	89	205	377	75	57	304	87
Peak Hour Factor	1.0000	1.0000	1.0000	1.0000	1.0000	1.0000	1.0000	1.0000	1.0000	1.0000	1.0000	1.0000
Other Adjustment Factor	1.0000	1.0000	1.0000	1.0000	1.0000	1.0000	1.0000	1.0000	1.0000	1.0000	1.0000	1.0000
Total 15-Minute Volume [veh/h]	24	224	20	42	190	22	51	94	19	14	76	22
Total Analysis Volume [veh/h]	94	895	79	169	758	89	205	377	75	57	304	87
Pedestrian Volume [ped/h]	0			0			0			0		
Bicycle Volume [bicycles/h]	0			0			0			0		

Intersection Settings

Cycle Length [s]	100
Lost time [s]	10.00

Phasing & Timing

Control Type	Protecte	Permiss	Permiss	Protecte	Permiss	Permiss	Protecte	Permiss	Permiss	Protecte	Permiss	Permiss
Signal group	1	1	0	1	1	0	1	1	0	1	1	0
Auxiliary Signal Groups												
Lead / Lag	Lag	-	-	Lag	-	-	Lag	-	-	Lag	-	-

Movement, Approach, & Intersection Results

V/C, Movement V/C Ratio	0.06	0.20	0.20	0.11	0.24	0.06	0.13	0.24	0.05	0.04	0.24	0.24
Intersection LOS	C											
Intersection V/C	0.781											

Intersection Level Of Service Report
Intersection 12: Broadway & Brand Blvd

Control Type:	Signalized	Delay (sec / veh):	-
Analysis Method:	ICU 1	Level Of Service:	B
Analysis Period:	15 minutes	Volume to Capacity (v/c):	0.658

Intersection Setup

Name	Brand Blvd			Brand Blvd			Broadway			Broadway		
Approach	Northbound			Southbound			Eastbound			Westbound		
Lane Configuration												
Turning Movement	Left	Thru	Right	Left	Thru	Right	Left	Thru	Right	Left	Thru	Right
Lane Width [ft]	12.00	12.00	12.00	12.00	12.00	12.00	12.00	12.00	12.00	12.00	12.00	12.00
No. of Lanes in Pocket	0	0	0	0	0	0	0	0	0	0	0	0
Pocket Length [ft]	100.00	100.00	100.00	100.00	100.00	100.00	100.00	100.00	100.00	100.00	100.00	100.00
Speed [mph]	30.00			30.00			30.00			30.00		
Grade [%]	0.00			0.00			0.00			0.00		
Crosswalk	Yes			Yes			Yes			Yes		

Volumes

Name	Brand Blvd			Brand Blvd			Broadway			Broadway		
Base Volume Input [veh/h]	136	555	125	115	609	140	150	604	73	139	429	139
Base Volume Adjustment Factor	1.0000	1.0000	1.0000	1.0000	1.0000	1.0000	1.0000	1.0000	1.0000	1.0000	1.0000	1.0000
Heavy Vehicles Percentage [%]	2.00	2.00	2.00	2.00	2.00	2.00	2.00	2.00	2.00	2.00	2.00	2.00
Growth Rate	1.02	1.02	1.02	1.02	1.02	1.02	1.02	1.02	1.02	1.02	1.02	1.02
In-Process Volume [veh/h]	0	0	0	0	0	0	0	0	0	0	0	0
Site-Generated Trips [veh/h]	0	7	0	0	-3	0	0	3	0	0	-2	0
Diverted Trips [veh/h]	0	0	0	0	0	0	0	0	0	0	0	0
Pass-by Trips [veh/h]	0	0	0	0	0	0	0	0	0	0	0	0
Existing Site Adjustment Volume [veh/h]	0	0	0	0	0	0	0	0	0	0	0	0
Other Volume [veh/h]	0	0	0	0	0	0	0	0	0	0	0	0
Total Hourly Volume [veh/h]	139	573	128	117	618	143	153	619	74	142	436	142
Peak Hour Factor	1.0000	1.0000	1.0000	1.0000	1.0000	1.0000	1.0000	1.0000	1.0000	1.0000	1.0000	1.0000
Other Adjustment Factor	1.0000	1.0000	1.0000	1.0000	1.0000	1.0000	1.0000	1.0000	1.0000	1.0000	1.0000	1.0000
Total 15-Minute Volume [veh/h]	35	143	32	29	155	36	38	155	19	36	109	36
Total Analysis Volume [veh/h]	139	573	128	117	618	143	153	619	74	142	436	142
Pedestrian Volume [ped/h]	0			0			0			0		
Bicycle Volume [bicycles/h]	0			0			0			0		

Intersection Settings

Cycle Length [s]	100
Lost time [s]	10.00

Phasing & Timing

Control Type	Protecte	Permiss	Permiss	Protecte	Permiss	Permiss	Protecte	Permiss	Permiss	Protecte	Permiss	Permiss
Signal group	1	1	0	1	1	0	1	1	0	1	1	0
Auxiliary Signal Groups												
Lead / Lag	Lag	-	-	Lag	-	-	Lag	-	-	Lag	-	-

Movement, Approach, & Intersection Results

V/C, Movement V/C Ratio	0.09	0.18	0.08	0.07	0.16	0.16	0.10	0.22	0.22	0.09	0.18	0.18
Intersection LOS	B											
Intersection V/C	0.658											

Intersection Level Of Service Report
Intersection 13: Broadway & Maryland Ave

Control Type:	Signalized	Delay (sec / veh):	-
Analysis Method:	ICU 1	Level Of Service:	A
Analysis Period:	15 minutes	Volume to Capacity (v/c):	0.496

Intersection Setup

Name	Maryland Ave			Maryland Ave			Broadway			Broadway		
Approach	Northbound			Southbound			Eastbound			Westbound		
Lane Configuration												
Turning Movement	Left	Thru	Right	Left	Thru	Right	Left	Thru	Right	Left	Thru	Right
Lane Width [ft]	12.00	12.00	12.00	12.00	12.00	12.00	12.00	12.00	12.00	12.00	12.00	12.00
No. of Lanes in Pocket	0	0	0	0	0	0	0	0	0	0	0	0
Pocket Length [ft]	100.00	100.00	100.00	100.00	100.00	100.00	100.00	100.00	100.00	100.00	100.00	100.00
Speed [mph]	30.00			30.00			30.00			30.00		
Grade [%]	0.00			0.00			0.00			0.00		
Crosswalk	Yes			Yes			Yes			Yes		

Volumes

Name	Maryland Ave			Maryland Ave			Broadway			Broadway		
Base Volume Input [veh/h]	86	13	76	60	16	59	28	696	100	46	541	25
Base Volume Adjustment Factor	1.0000	1.0000	1.0000	1.0000	1.0000	1.0000	1.0000	1.0000	1.0000	1.0000	1.0000	1.0000
Heavy Vehicles Percentage [%]	2.00	2.00	2.00	2.00	2.00	2.00	2.00	2.00	2.00	2.00	2.00	2.00
Growth Rate	1.02	1.02	1.02	1.02	1.02	1.02	1.02	1.02	1.02	1.02	1.02	1.02
In-Process Volume [veh/h]	0	0	0	0	0	0	0	0	0	0	0	0
Site-Generated Trips [veh/h]	0	0	0	0	0	0	0	3	0	0	-2	0
Diverted Trips [veh/h]	0	0	0	0	0	0	0	0	0	0	0	0
Pass-by Trips [veh/h]	0	0	0	0	0	0	0	0	0	0	0	0
Existing Site Adjustment Volume [veh/h]	0	0	0	0	0	0	0	0	0	0	0	0
Other Volume [veh/h]	0	0	0	0	0	0	0	0	0	0	0	0
Total Hourly Volume [veh/h]	88	13	78	61	16	60	29	713	102	47	550	26
Peak Hour Factor	1.0000	1.0000	1.0000	1.0000	1.0000	1.0000	1.0000	1.0000	1.0000	1.0000	1.0000	1.0000
Other Adjustment Factor	1.0000	1.0000	1.0000	1.0000	1.0000	1.0000	1.0000	1.0000	1.0000	1.0000	1.0000	1.0000
Total 15-Minute Volume [veh/h]	22	3	20	15	4	15	7	178	26	12	138	7
Total Analysis Volume [veh/h]	88	13	78	61	16	60	29	713	102	47	550	26
Pedestrian Volume [ped/h]	0			0			0			0		
Bicycle Volume [bicycles/h]	0			0			0			0		

Intersection Settings

Cycle Length [s]	100
Lost time [s]	10.00

Phasing & Timing

Control Type	Permiss	Permiss	Permiss	Permiss	Permiss	Permiss	Permiss	Permiss	Permiss	Permiss	Permiss	Permiss
Signal group	0	1	0	0	1	0	0	1	0	0	1	0
Auxiliary Signal Groups												
Lead / Lag	-	-	-	-	-	-	-	-	-	-	-	-

Movement, Approach, & Intersection Results

V/C, Movement V/C Ratio	0.06	0.06	0.06	0.04	0.05	0.05	0.02	0.26	0.26	0.03	0.18	0.18
Intersection LOS	A											
Intersection V/C	0.496											

Intersection Level Of Service Report
Intersection 14: Broadway & Louise St

Control Type:	Signalized	Delay (sec / veh):	-
Analysis Method:	ICU 1	Level Of Service:	A
Analysis Period:	15 minutes	Volume to Capacity (v/c):	0.586

Intersection Setup

Name	Louise St			Louise St			Broadway			Broadway		
Approach	Northbound			Southbound			Eastbound			Westbound		
Lane Configuration												
Turning Movement	Left	Thru	Right	Left	Thru	Right	Left	Thru	Right	Left	Thru	Right
Lane Width [ft]	12.00	12.00	12.00	12.00	12.00	12.00	12.00	12.00	12.00	12.00	12.00	12.00
No. of Lanes in Pocket	0	0	0	0	0	0	0	0	0	0	0	0
Pocket Length [ft]	100.00	100.00	100.00	100.00	100.00	100.00	100.00	100.00	100.00	100.00	100.00	100.00
Speed [mph]	30.00			30.00			30.00			30.00		
Grade [%]	0.00			0.00			0.00			0.00		
Crosswalk	Yes			Yes			Yes			Yes		

Volumes

Name	Louise St			Louise St			Broadway			Broadway		
Base Volume Input [veh/h]	32	259	46	40	261	40	65	691	42	18	554	85
Base Volume Adjustment Factor	1.0000	1.0000	1.0000	1.0000	1.0000	1.0000	1.0000	1.0000	1.0000	1.0000	1.0000	1.0000
Heavy Vehicles Percentage [%]	2.00	2.00	2.00	2.00	2.00	2.00	2.00	2.00	2.00	2.00	2.00	2.00
Growth Rate	1.01	1.01	1.01	1.01	1.01	1.01	1.01	1.01	1.01	1.01	1.01	1.01
In-Process Volume [veh/h]	0	0	0	0	0	0	0	0	0	0	0	0
Site-Generated Trips [veh/h]	0	0	0	0	0	0	0	3	0	0	-2	0
Diverted Trips [veh/h]	0	0	0	0	0	0	0	0	0	0	0	0
Pass-by Trips [veh/h]	0	0	0	0	0	0	0	0	0	0	0	0
Existing Site Adjustment Volume [veh/h]	0	0	0	0	0	0	0	0	0	0	0	0
Other Volume [veh/h]	0	0	0	0	0	0	0	0	0	0	0	0
Total Hourly Volume [veh/h]	32	262	46	40	264	40	66	701	42	18	558	86
Peak Hour Factor	1.0000	1.0000	1.0000	1.0000	1.0000	1.0000	1.0000	1.0000	1.0000	1.0000	1.0000	1.0000
Other Adjustment Factor	1.0000	1.0000	1.0000	1.0000	1.0000	1.0000	1.0000	1.0000	1.0000	1.0000	1.0000	1.0000
Total 15-Minute Volume [veh/h]	8	66	12	10	66	10	17	175	11	5	140	22
Total Analysis Volume [veh/h]	32	262	46	40	264	40	66	701	42	18	558	86
Pedestrian Volume [ped/h]	0			0			0			0		
Bicycle Volume [bicycles/h]	0			0			0			0		

Intersection Settings

Cycle Length [s]	100
Lost time [s]	10.00

Phasing & Timing

Control Type	Permiss	Permiss	Permiss	Permiss	Permiss	Permiss	Permiss	Permiss	Permiss	Permiss	Permiss	Permiss
Signal group	0	1	0	0	1	0	0	1	0	0	1	0
Auxiliary Signal Groups												
Lead / Lag	-	-	-	-	-	-	-	-	-	-	-	-

Movement, Approach, & Intersection Results

V/C, Movement V/C Ratio	0.02	0.21	0.21	0.03	0.22	0.22	0.04	0.23	0.23	0.01	0.21	0.21
Intersection LOS	A											
Intersection V/C	0.586											

Intersection Level Of Service Report
Intersection 15: Broadway and Kenwood St

Control Type:	Signalized	Delay (sec / veh):	-
Analysis Method:	ICU 1	Level Of Service:	A
Analysis Period:	15 minutes	Volume to Capacity (v/c):	0.426

Intersection Setup

Name	Kenwood St			Kenwood St			Broadway			Broadway		
Approach	Northbound			Southbound			Eastbound			Westbound		
Lane Configuration												
Turning Movement	Left	Thru	Right	Left	Thru	Right	Left	Thru	Right	Left	Thru	Right
Lane Width [ft]	12.00	12.00	12.00	12.00	12.00	12.00	12.00	12.00	12.00	12.00	12.00	12.00
No. of Lanes in Pocket	0	0	0	0	0	0	0	0	0	0	0	0
Pocket Length [ft]	100.00	100.00	100.00	100.00	100.00	100.00	100.00	100.00	100.00	100.00	100.00	100.00
Speed [mph]	30.00			30.00			30.00			30.00		
Grade [%]	0.00			0.00			0.00			0.00		
Crosswalk	Yes			Yes			Yes			Yes		

Volumes

Name	Kenwood St			Kenwood St			Broadway			Broadway		
Base Volume Input [veh/h]	23	69	26	25	41	48	40	660	18	13	530	32
Base Volume Adjustment Factor	1.0000	1.0000	1.0000	1.0000	1.0000	1.0000	1.0000	1.0000	1.0000	1.0000	1.0000	1.0000
Heavy Vehicles Percentage [%]	2.00	2.00	2.00	2.00	2.00	2.00	2.00	2.00	2.00	2.00	2.00	2.00
Growth Rate	1.01	1.01	1.01	1.01	1.01	1.01	1.01	1.01	1.01	1.01	1.01	1.01
In-Process Volume [veh/h]	0	0	0	0	0	0	0	0	0	0	0	0
Site-Generated Trips [veh/h]	0	0	0	0	0	0	0	3	0	0	-2	0
Diverted Trips [veh/h]	0	0	0	0	0	0	0	0	0	0	0	0
Pass-by Trips [veh/h]	0	0	0	0	0	0	0	0	0	0	0	0
Existing Site Adjustment Volume [veh/h]	0	0	0	0	0	0	0	0	0	0	0	0
Other Volume [veh/h]	0	0	0	0	0	0	0	0	0	0	0	0
Total Hourly Volume [veh/h]	23	70	26	25	41	48	40	670	18	13	533	32
Peak Hour Factor	1.0000	1.0000	1.0000	1.0000	1.0000	1.0000	1.0000	1.0000	1.0000	1.0000	1.0000	1.0000
Other Adjustment Factor	1.0000	1.0000	1.0000	1.0000	1.0000	1.0000	1.0000	1.0000	1.0000	1.0000	1.0000	1.0000
Total 15-Minute Volume [veh/h]	6	18	7	6	10	12	10	168	5	3	133	8
Total Analysis Volume [veh/h]	23	70	26	25	41	48	40	670	18	13	533	32
Pedestrian Volume [ped/h]	0			0			0			0		
Bicycle Volume [bicycles/h]	0			0			0			0		

Intersection Settings

Cycle Length [s]	100
Lost time [s]	10.00

Phasing & Timing

Control Type	Permiss	Permiss	Permiss	Permiss	Permiss	Permiss	Permiss	Permiss	Permiss	Permiss	Permiss	Permiss
Signal group	0	1	0	0	1	0	0	1	0	0	1	0
Auxiliary Signal Groups												
Lead / Lag	-	-	-	-	-	-	-	-	-	-	-	-

Movement, Approach, & Intersection Results

V/C, Movement V/C Ratio	0.01	0.07	0.07	0.02	0.07	0.07	0.03	0.23	0.23	0.01	0.18	0.18
Intersection LOS	A											
Intersection V/C	0.426											

Intersection Level Of Service Report
Intersection 16: Broadway & Jackon St

Control Type:	Signalized	Delay (sec / veh):	-
Analysis Method:	ICU 1	Level Of Service:	A
Analysis Period:	15 minutes	Volume to Capacity (v/c):	0.523

Intersection Setup

Name	Jackson St			Jackson St			Broadway			Broadway		
Approach	Northbound			Southbound			Eastbound			Westbound		
Lane Configuration												
Turning Movement	Left	Thru	Right	Left	Thru	Right	Left	Thru	Right	Left	Thru	Right
Lane Width [ft]	12.00	12.00	12.00	12.00	12.00	12.00	12.00	12.00	12.00	12.00	12.00	12.00
No. of Lanes in Pocket	0	0	0	0	0	0	0	0	0	0	0	0
Pocket Length [ft]	100.00	100.00	100.00	100.00	100.00	100.00	100.00	100.00	100.00	100.00	100.00	100.00
Speed [mph]	30.00			30.00			30.00			30.00		
Grade [%]	0.00			0.00			0.00			0.00		
Crosswalk	Yes			Yes			Yes			Yes		

Volumes

Name	Jackson St			Jackson St			Broadway			Broadway		
Base Volume Input [veh/h]	26	168	41	65	141	39	36	639	18	24	531	58
Base Volume Adjustment Factor	1.0000	1.0000	1.0000	1.0000	1.0000	1.0000	1.0000	1.0000	1.0000	1.0000	1.0000	1.0000
Heavy Vehicles Percentage [%]	2.00	2.00	2.00	2.00	2.00	2.00	2.00	2.00	2.00	2.00	2.00	2.00
Growth Rate	1.01	1.01	1.01	1.01	1.01	1.01	1.01	1.01	1.01	1.01	1.01	1.01
In-Process Volume [veh/h]	0	0	0	0	0	0	0	0	0	0	0	0
Site-Generated Trips [veh/h]	0	0	0	-1	0	-2	3	0	0	0	0	4
Diverted Trips [veh/h]	0	0	0	0	0	0	0	0	0	0	0	0
Pass-by Trips [veh/h]	0	0	0	0	0	0	0	0	0	0	0	0
Existing Site Adjustment Volume [veh/h]	0	0	0	0	0	0	0	0	0	0	0	0
Other Volume [veh/h]	0	0	0	0	0	0	0	0	0	0	0	0
Total Hourly Volume [veh/h]	26	170	41	65	142	37	39	645	18	24	536	63
Peak Hour Factor	1.0000	1.0000	1.0000	1.0000	1.0000	1.0000	1.0000	1.0000	1.0000	1.0000	1.0000	1.0000
Other Adjustment Factor	1.0000	1.0000	1.0000	1.0000	1.0000	1.0000	1.0000	1.0000	1.0000	1.0000	1.0000	1.0000
Total 15-Minute Volume [veh/h]	7	43	10	16	36	9	10	161	5	6	134	16
Total Analysis Volume [veh/h]	26	170	41	65	142	37	39	645	18	24	536	63
Pedestrian Volume [ped/h]	0			0			0			0		
Bicycle Volume [bicycles/h]	0			0			0			0		

Intersection Settings

Cycle Length [s]	100
Lost time [s]	10.00

Phasing & Timing

Control Type	Permiss	Permiss	Permiss	Permiss	Permiss	Permiss	Permiss	Permiss	Permiss	Permiss	Permiss	Permiss
Signal group	0	1	0	0	1	0	0	1	0	0	1	0
Auxiliary Signal Groups												
Lead / Lag	-	-	-	-	-	-	-	-	-	-	-	-

Movement, Approach, & Intersection Results

V/C, Movement V/C Ratio	0.02	0.15	0.15	0.04	0.11	0.11	0.02	0.22	0.22	0.02	0.19	0.19
Intersection LOS	A											
Intersection V/C	0.523											

Intersection Level Of Service Report
Intersection 1: Brand Blvd & California Ave

Control Type:	Signalized	Delay (sec / veh):	-
Analysis Method:	ICU 1	Level Of Service:	C
Analysis Period:	15 minutes	Volume to Capacity (v/c):	0.755

Intersection Setup

Name	Brand Blvd			Brand Blvd			California Ave			Calfornia Ave		
Approach	Northbound			Southbound			Eastbound			Westbound		
Lane Configuration												
Turning Movement	Left	Thru	Right	Left	Thru	Right	Left	Thru	Right	Left	Thru	Right
Lane Width [ft]	12.00	12.00	12.00	12.00	12.00	12.00	12.00	12.00	12.00	12.00	12.00	12.00
No. of Lanes in Pocket	0	0	0	0	0	0	0	0	0	0	0	0
Pocket Length [ft]	100.00	100.00	100.00	100.00	100.00	100.00	100.00	100.00	100.00	100.00	100.00	100.00
Speed [mph]	30.00			30.00			30.00			30.00		
Grade [%]	0.00			0.00			0.00			0.00		
Crosswalk	Yes			Yes			Yes			Yes		

Volumes

Name	Brand Blvd			Brand Blvd			California Ave			Calfornia Ave		
Base Volume Input [veh/h]	62	645	67	68	762	99	47	218	57	42	202	83
Base Volume Adjustment Factor	1.0000	1.0000	1.0000	1.0000	1.0000	1.0000	1.0000	1.0000	1.0000	1.0000	1.0000	1.0000
Heavy Vehicles Percentage [%]	2.00	2.00	2.00	2.00	2.00	2.00	2.00	2.00	2.00	2.00	2.00	2.00
Growth Rate	1.05	1.05	1.05	1.05	1.05	1.05	1.05	1.05	1.05	1.05	1.05	1.05
In-Process Volume [veh/h]	14	154	8	16	151	12	7	12	8	8	19	10
Site-Generated Trips [veh/h]	0	0	0	0	0	0	0	0	0	0	0	0
Diverted Trips [veh/h]	0	0	0	0	0	0	0	0	0	0	0	0
Pass-by Trips [veh/h]	0	0	0	0	0	0	0	0	0	0	0	0
Existing Site Adjustment Volume [veh/h]	0	0	0	0	0	0	0	0	0	0	0	0
Other Volume [veh/h]	0	0	0	0	0	0	0	0	0	0	0	0
Total Hourly Volume [veh/h]	79	831	78	87	951	116	56	241	68	52	231	97
Peak Hour Factor	1.0000	1.0000	1.0000	1.0000	1.0000	1.0000	1.0000	1.0000	1.0000	1.0000	1.0000	1.0000
Other Adjustment Factor	1.0000	1.0000	1.0000	1.0000	1.0000	1.0000	1.0000	1.0000	1.0000	1.0000	1.0000	1.0000
Total 15-Minute Volume [veh/h]	20	208	20	22	238	29	14	60	17	13	58	24
Total Analysis Volume [veh/h]	79	831	78	87	951	116	56	241	68	52	231	97
Pedestrian Volume [ped/h]	0			0			0			0		
Bicycle Volume [bicycles/h]	0			0			0			0		

Intersection Settings

Cycle Length [s]	100
Lost time [s]	10.00

Phasing & Timing

Control Type	Protecte	Permiss	Permiss	Protecte	Permiss	Permiss	Permiss	Permiss	Permiss	Permiss	Permiss	Permiss
Signal group	1	1	0	1	1	0	0	1	0	0	1	0
Auxiliary Signal Groups												
Lead / Lag	Lag	-	-	Lag	-	-	-	-	-	-	-	-

Movement, Approach, & Intersection Results

V/C, Movement V/C Ratio	0.05	0.28	0.28	0.05	0.33	0.33	0.04	0.23	0.23	0.03	0.24	0.24
Intersection LOS	C											
Intersection V/C	0.755											

Intersection Level Of Service Report
Intersection 2: California Ave & Maryland Ave

Control Type:	Signalized	Delay (sec / veh):	-
Analysis Method:	ICU 1	Level Of Service:	B
Analysis Period:	15 minutes	Volume to Capacity (v/c):	0.673

Intersection Setup

Name	Maryland Ave			Maryland Ave			Calfornia Ave			California Ave		
Approach	Northbound			Southbound			Eastbound			Westbound		
Lane Configuration												
Turning Movement	Left	Thru	Right	Left	Thru	Right	Left	Thru	Right	Left	Thru	Right
Lane Width [ft]	12.00	12.00	12.00	12.00	12.00	12.00	12.00	12.00	12.00	12.00	12.00	12.00
No. of Lanes in Pocket	0	0	0	0	0	0	0	0	0	0	0	0
Pocket Length [ft]	100.00	100.00	100.00	100.00	100.00	100.00	100.00	100.00	100.00	100.00	100.00	100.00
Speed [mph]	30.00			30.00			30.00			30.00		
Grade [%]	0.00			0.00			0.00			0.00		
Crosswalk	Yes			Yes			Yes			Yes		

Volumes

Name	Maryland Ave			Maryland Ave			Calfornia Ave			California Ave		
Base Volume Input [veh/h]	80	221	47	15	75	33	23	239	50	16	258	47
Base Volume Adjustment Factor	1.0000	1.0000	1.0000	1.0000	1.0000	1.0000	1.0000	1.0000	1.0000	1.0000	1.0000	1.0000
Heavy Vehicles Percentage [%]	2.00	2.00	2.00	2.00	2.00	2.00	2.00	2.00	2.00	2.00	2.00	2.00
Growth Rate	1.05	1.05	1.05	1.05	1.05	1.05	1.05	1.05	1.05	1.05	1.05	1.05
In-Process Volume [veh/h]	20	8	2	0	10	0	0	6	30	4	16	0
Site-Generated Trips [veh/h]	0	0	0	0	0	0	0	0	0	0	0	0
Diverted Trips [veh/h]	0	0	0	0	0	0	0	0	0	0	0	0
Pass-by Trips [veh/h]	0	0	0	0	0	0	0	0	0	0	0	0
Existing Site Adjustment Volume [veh/h]	0	0	0	0	0	0	0	0	0	0	0	0
Other Volume [veh/h]	0	0	0	0	0	0	0	0	0	0	0	0
Total Hourly Volume [veh/h]	104	240	51	16	89	35	24	257	83	21	287	49
Peak Hour Factor	1.0000	1.0000	1.0000	1.0000	1.0000	1.0000	1.0000	1.0000	1.0000	1.0000	1.0000	1.0000
Other Adjustment Factor	1.0000	1.0000	1.0000	1.0000	1.0000	1.0000	1.0000	1.0000	1.0000	1.0000	1.0000	1.0000
Total 15-Minute Volume [veh/h]	26	60	13	4	22	9	6	64	21	5	72	12
Total Analysis Volume [veh/h]	104	240	51	16	89	35	24	257	83	21	287	49
Pedestrian Volume [ped/h]	0			0			0			0		
Bicycle Volume [bicycles/h]	0			0			0			0		

Intersection Settings

Cycle Length [s]	100
Lost time [s]	10.00

Phasing & Timing

Control Type	Split	Split	Split	Split	Split	Split	Permiss	Permiss	Permiss	Permiss	Permiss	Permiss
Signal group	0	1	0	0	1	0	0	1	0	0	1	0
Auxiliary Signal Groups												
Lead / Lag	-	-	-	-	-	-	-	-	-	-	-	-

Movement, Approach, & Intersection Results

V/C, Movement V/C Ratio	0.07	0.25	0.25	0.01	0.09	0.09	0.02	0.18	0.05	0.01	0.22	0.22
Intersection LOS	B											
Intersection V/C	0.673											

Intersection Level Of Service Report
Intersection 3: California Ave & Louise St

Control Type:	All-way stop	Delay (sec / veh):	41.0
Analysis Method:	HCM 2010	Level Of Service:	E
Analysis Period:	15 minutes	Volume to Capacity (v/c):	0.902

Intersection Setup

Name	Louise St			Louise St			California Ave			California Ave		
Approach	Northbound			Southbound			Eastbound			Westbound		
Lane Configuration												
Turning Movement	Left	Thru	Right	Left	Thru	Right	Left	Thru	Right	Left	Thru	Right
Lane Width [ft]	12.00	12.00	12.00	12.00	12.00	12.00	12.00	12.00	12.00	12.00	12.00	12.00
No. of Lanes in Pocket	0	0	0	0	0	0	0	0	0	0	0	0
Pocket Length [ft]	100.00	100.00	100.00	100.00	100.00	100.00	100.00	100.00	100.00	100.00	100.00	100.00
Speed [mph]	30.00			30.00			30.00			30.00		
Grade [%]	0.00			0.00			0.00			0.00		
Crosswalk	Yes			Yes			Yes			Yes		

Volumes

Name	Louise St			Louise St			California Ave			California Ave		
Base Volume Input [veh/h]	34	266	40	60	244	30	28	311	36	18	217	35
Base Volume Adjustment Factor	1.0000	1.0000	1.0000	1.0000	1.0000	1.0000	1.0000	1.0000	1.0000	1.0000	1.0000	1.0000
Heavy Vehicles Percentage [%]	2.00	2.00	2.00	2.00	2.00	2.00	2.00	2.00	2.00	2.00	2.00	2.00
Growth Rate	1.04	1.04	1.04	1.04	1.04	1.04	1.04	1.04	1.04	1.04	1.04	1.04
In-Process Volume [veh/h]	2	3	2	0	2	0	0	6	2	2	18	0
Site-Generated Trips [veh/h]	0	0	0	0	0	0	0	0	0	0	0	0
Diverted Trips [veh/h]	0	0	0	0	0	0	0	0	0	0	0	0
Pass-by Trips [veh/h]	0	0	0	0	0	0	0	0	0	0	0	0
Existing Site Adjustment Volume [veh/h]	0	0	0	0	0	0	0	0	0	0	0	0
Other Volume [veh/h]	0	0	0	0	0	0	0	0	0	0	0	0
Total Hourly Volume [veh/h]	37	280	44	62	256	31	29	329	39	21	244	36
Peak Hour Factor	1.0000	1.0000	1.0000	1.0000	1.0000	1.0000	1.0000	1.0000	1.0000	1.0000	1.0000	1.0000
Other Adjustment Factor	1.0000	1.0000	1.0000	1.0000	1.0000	1.0000	1.0000	1.0000	1.0000	1.0000	1.0000	1.0000
Total 15-Minute Volume [veh/h]	9	70	11	16	64	8	7	82	10	5	61	9
Total Analysis Volume [veh/h]	37	280	44	62	256	31	29	329	39	21	244	36
Pedestrian Volume [ped/h]	0			0			0			0		

Intersection Settings

Lanes

Capacity per Entry Lane [veh/h]	433	429	440	420
Degree of Utilization, x	0.83	0.81	0.90	0.72

Movement, Approach, & Intersection Results

95th-Percentile Queue Length [veh]	7.97	7.49	9.80	5.53
95th-Percentile Queue Length [ft]	199.33	187.16	244.94	138.25
Approach Delay [s/veh]	41.11	38.96	50.80	30.45
Approach LOS	E	E	F	D
Intersection Delay [s/veh]	41.03			
Intersection LOS	E			

Intersection Level Of Service Report
Intersection 4: California Ave & Kenwood St

Control Type:	All-way stop	Delay (sec / veh):	13.4
Analysis Method:	HCM 2010	Level Of Service:	B
Analysis Period:	15 minutes	Volume to Capacity (v/c):	0.579

Intersection Setup

Name	Kenwood St			Kenwood St			California Ave			California Ave		
Approach	Northbound			Southbound			Eastbound			Westbound		
Lane Configuration												
Turning Movement	Left	Thru	Right	Left	Thru	Right	Left	Thru	Right	Left	Thru	Right
Lane Width [ft]	12.00	12.00	12.00	12.00	12.00	12.00	12.00	12.00	12.00	12.00	12.00	12.00
No. of Lanes in Pocket	0	0	0	0	0	0	0	0	0	0	0	0
Pocket Length [ft]	100.00	100.00	100.00	100.00	100.00	100.00	100.00	100.00	100.00	100.00	100.00	100.00
Speed [mph]	30.00			30.00			30.00			30.00		
Grade [%]	0.00			0.00			0.00			0.00		
Crosswalk	Yes			Yes			Yes			Yes		

Volumes

Name	Kenwood St			Kenwood St			California Ave			California Ave		
Base Volume Input [veh/h]	40	91	36	10	61	12	18	337	21	9	276	12
Base Volume Adjustment Factor	1.0000	1.0000	1.0000	1.0000	1.0000	1.0000	1.0000	1.0000	1.0000	1.0000	1.0000	1.0000
Heavy Vehicles Percentage [%]	2.00	2.00	2.00	2.00	2.00	2.00	2.00	2.00	2.00	2.00	2.00	2.00
Growth Rate	1.04	1.04	1.04	1.04	1.04	1.04	1.04	1.04	1.04	1.04	1.04	1.04
In-Process Volume [veh/h]	0	0	0	0	0	0	0	8	0	0	20	0
Site-Generated Trips [veh/h]	0	0	0	0	0	0	0	0	0	0	0	0
Diverted Trips [veh/h]	0	0	0	0	0	0	0	0	0	0	0	0
Pass-by Trips [veh/h]	0	0	0	0	0	0	0	0	0	0	0	0
Existing Site Adjustment Volume [veh/h]	0	0	0	0	0	0	0	0	0	0	0	0
Other Volume [veh/h]	0	0	0	0	0	0	0	0	0	0	0	0
Total Hourly Volume [veh/h]	42	95	37	10	63	12	19	358	22	9	307	12
Peak Hour Factor	1.0000	1.0000	1.0000	1.0000	1.0000	1.0000	1.0000	1.0000	1.0000	1.0000	1.0000	1.0000
Other Adjustment Factor	1.0000	1.0000	1.0000	1.0000	1.0000	1.0000	1.0000	1.0000	1.0000	1.0000	1.0000	1.0000
Total 15-Minute Volume [veh/h]	11	24	9	3	16	3	5	90	6	2	77	3
Total Analysis Volume [veh/h]	42	95	37	10	63	12	19	358	22	9	307	12
Pedestrian Volume [ped/h]	0			0			0			0		

Intersection Settings

Lanes

Capacity per Entry Lane [veh/h]	606	582	689	675
Degree of Utilization, x	0.29	0.15	0.58	0.49

Movement, Approach, & Intersection Results

95th-Percentile Queue Length [veh]	1.18	0.51	3.74	2.67
95th-Percentile Queue Length [ft]	29.59	12.72	93.54	66.73
Approach Delay [s/veh]	11.32	10.24	15.16	13.26
Approach LOS	B	B	C	B
Intersection Delay [s/veh]	13.43			
Intersection LOS	B			

Intersection Level Of Service Report
Intersection 5: California Ave & Jackson St

Control Type:	All-way stop	Delay (sec / veh):	74.5
Analysis Method:	HCM 2010	Level Of Service:	F
Analysis Period:	15 minutes	Volume to Capacity (v/c):	1.039

Intersection Setup

Name	Jackson St			Jackson St			California Ave			California Ave		
Approach	Northbound			Southbound			Eastbound			Westbound		
Lane Configuration												
Turning Movement	Left	Thru	Right	Left	Thru	Right	Left	Thru	Right	Left	Thru	Right
Lane Width [ft]	12.00	12.00	12.00	12.00	12.00	12.00	12.00	12.00	12.00	12.00	12.00	12.00
No. of Lanes in Pocket	0	0	0	0	0	0	0	0	0	0	0	0
Pocket Length [ft]	100.00	100.00	100.00	100.00	100.00	100.00	100.00	100.00	100.00	100.00	100.00	100.00
Speed [mph]	30.00			30.00			30.00			30.00		
Grade [%]	0.00			0.00			0.00			0.00		
Crosswalk	Yes			Yes			Yes			Yes		

Volumes

Name	Jackson St			Jackson St			California Ave			California Ave		
Base Volume Input [veh/h]	23	301	58	62	243	15	19	345	15	18	269	62
Base Volume Adjustment Factor	1.0000	1.0000	1.0000	1.0000	1.0000	1.0000	1.0000	1.0000	1.0000	1.0000	1.0000	1.0000
Heavy Vehicles Percentage [%]	2.00	2.00	2.00	2.00	2.00	2.00	2.00	2.00	2.00	2.00	2.00	2.00
Growth Rate	1.04	1.04	1.04	1.04	1.04	1.04	1.04	1.04	1.04	1.04	1.04	1.04
In-Process Volume [veh/h]	0	0	0	0	0	0	0	8	0	0	20	0
Site-Generated Trips [veh/h]	0	0	0	0	0	0	0	0	0	0	0	0
Diverted Trips [veh/h]	0	0	0	0	0	0	0	0	0	0	0	0
Pass-by Trips [veh/h]	0	0	0	0	0	0	0	0	0	0	0	0
Existing Site Adjustment Volume [veh/h]	0	0	0	0	0	0	0	0	0	0	0	0
Other Volume [veh/h]	0	0	0	0	0	0	0	0	0	0	0	0
Total Hourly Volume [veh/h]	24	313	60	64	253	16	20	367	16	19	300	64
Peak Hour Factor	1.0000	1.0000	1.0000	1.0000	1.0000	1.0000	1.0000	1.0000	1.0000	1.0000	1.0000	1.0000
Other Adjustment Factor	1.0000	1.0000	1.0000	1.0000	1.0000	1.0000	1.0000	1.0000	1.0000	1.0000	1.0000	1.0000
Total 15-Minute Volume [veh/h]	6	78	15	16	63	4	5	92	4	5	75	16
Total Analysis Volume [veh/h]	24	313	60	64	253	16	20	367	16	19	300	64
Pedestrian Volume [ped/h]	0			0			0			0		

Intersection Settings

Lanes

Capacity per Entry Lane [veh/h]	397	376	403	390
Degree of Utilization, x	1.02	0.89	1.04	0.98

Movement, Approach, & Intersection Results

95th-Percentile Queue Length [veh]	12.62	8.80	13.28	11.54
95th-Percentile Queue Length [ft]	315.39	220.06	332.07	288.51
Approach Delay [s/veh]	81.03	53.72	87.61	72.02
Approach LOS	F	F	F	F
Intersection Delay [s/veh]	74.50			
Intersection LOS	F			

Intersection Level Of Service Report
Intersection 6: Wilson Ave & Brand Blvd

Control Type:	Signalized	Delay (sec / veh):	-
Analysis Method:	ICU 1	Level Of Service:	C
Analysis Period:	15 minutes	Volume to Capacity (v/c):	0.722

Intersection Setup

Name	Brand Blvd			Brand Blvd			Wilson Ave			Wilson Ave		
Approach	Northbound			Southbound			Eastbound			Westbound		
Lane Configuration												
Turning Movement	Left	Thru	Right	Left	Thru	Right	Left	Thru	Right	Left	Thru	Right
Lane Width [ft]	12.00	12.00	12.00	12.00	12.00	12.00	12.00	12.00	12.00	12.00	12.00	12.00
No. of Lanes in Pocket	0	0	0	0	0	0	0	0	0	0	0	0
Pocket Length [ft]	100.00	100.00	100.00	100.00	100.00	100.00	100.00	100.00	100.00	100.00	100.00	100.00
Speed [mph]	30.00			30.00			30.00			30.00		
Grade [%]	0.00			0.00			0.00			0.00		
Crosswalk	Yes			Yes			Yes			Yes		

Volumes

Name	Brand Blvd			Brand Blvd			Wilson Ave			Wilson Ave		
Base Volume Input [veh/h]	64	541	51	98	726	74	35	286	79	98	316	94
Base Volume Adjustment Factor	1.0000	1.0000	1.0000	1.0000	1.0000	1.0000	1.0000	1.0000	1.0000	1.0000	1.0000	1.0000
Heavy Vehicles Percentage [%]	2.00	2.00	2.00	2.00	2.00	2.00	2.00	2.00	2.00	2.00	2.00	2.00
Growth Rate	1.05	1.05	1.05	1.05	1.05	1.05	1.05	1.05	1.05	1.05	1.05	1.05
In-Process Volume [veh/h]	11	147	26	22	125	20	16	14	10	7	16	12
Site-Generated Trips [veh/h]	0	0	0	0	0	0	0	0	0	0	0	0
Diverted Trips [veh/h]	0	0	0	0	0	0	0	0	0	0	0	0
Pass-by Trips [veh/h]	0	0	0	0	0	0	0	0	0	0	0	0
Existing Site Adjustment Volume [veh/h]	0	0	0	0	0	0	0	0	0	0	0	0
Other Volume [veh/h]	0	0	0	0	0	0	0	0	0	0	0	0
Total Hourly Volume [veh/h]	78	715	80	125	887	98	53	314	93	110	348	111
Peak Hour Factor	1.0000	1.0000	1.0000	1.0000	1.0000	1.0000	1.0000	1.0000	1.0000	1.0000	1.0000	1.0000
Other Adjustment Factor	1.0000	1.0000	1.0000	1.0000	1.0000	1.0000	1.0000	1.0000	1.0000	1.0000	1.0000	1.0000
Total 15-Minute Volume [veh/h]	20	179	20	31	222	25	13	79	23	28	87	28
Total Analysis Volume [veh/h]	78	715	80	125	887	98	53	314	93	110	348	111
Pedestrian Volume [ped/h]	0			0			0			0		
Bicycle Volume [bicycles/h]	0			0			0			0		

Intersection Settings

Cycle Length [s]	100
Lost time [s]	10.00

Phasing & Timing

Control Type	Protecte	Permiss	Permiss	Protecte	Permiss	Permiss	Permiss	Permiss	Permiss	Permiss	Permiss	Permiss
Signal group	1	1	0	1	1	0	0	1	0	0	1	0
Auxiliary Signal Groups												
Lead / Lag	Lag	-	-	Lag	-	-	-	-	-	-	-	-

Movement, Approach, & Intersection Results

V/C, Movement V/C Ratio	0.05	0.25	0.25	0.08	0.31	0.31	0.03	0.20	0.06	0.07	0.22	0.07
Intersection LOS	C											
Intersection V/C	0.722											

Intersection Level Of Service Report
Intersection 7: Wilson Ave & Maryland Ave

Control Type:	Signalized	Delay (sec / veh):	-
Analysis Method:	ICU 1	Level Of Service:	A
Analysis Period:	15 minutes	Volume to Capacity (v/c):	0.594

Intersection Setup

Name	Maryland Ave			Maryland Ave			Wilson Ave			Wilson Ave		
Approach	Northbound			Southbound			Eastbound			Westbound		
Lane Configuration												
Turning Movement	Left	Thru	Right	Left	Thru	Right	Left	Thru	Right	Left	Thru	Right
Lane Width [ft]	12.00	12.00	12.00	12.00	12.00	12.00	12.00	12.00	12.00	12.00	12.00	12.00
No. of Lanes in Pocket	0	0	0	0	0	0	0	0	0	0	0	0
Pocket Length [ft]	100.00	100.00	100.00	100.00	100.00	100.00	100.00	100.00	100.00	100.00	100.00	100.00
Speed [mph]	30.00			30.00			30.00			30.00		
Grade [%]	0.00			0.00			0.00			0.00		
Crosswalk	Yes			Yes			Yes			Yes		

Volumes

Name	Maryland Ave			Maryland Ave			Wilson Ave			Wilson Ave		
Base Volume Input [veh/h]	78	27	84	136	63	75	20	362	41	16	375	49
Base Volume Adjustment Factor	1.0000	1.0000	1.0000	1.0000	1.0000	1.0000	1.0000	1.0000	1.0000	1.0000	1.0000	1.0000
Heavy Vehicles Percentage [%]	2.00	2.00	2.00	2.00	2.00	2.00	2.00	2.00	2.00	2.00	2.00	2.00
Growth Rate	1.05	1.05	1.05	1.05	1.05	1.05	1.05	1.05	1.05	1.05	1.05	1.05
In-Process Volume [veh/h]	5	21	0	1	11	10	15	25	1	0	26	2
Site-Generated Trips [veh/h]	0	0	0	0	0	0	0	0	0	0	0	0
Diverted Trips [veh/h]	0	0	0	0	0	0	0	0	0	0	0	0
Pass-by Trips [veh/h]	0	0	0	0	0	0	0	0	0	0	0	0
Existing Site Adjustment Volume [veh/h]	0	0	0	0	0	0	0	0	0	0	0	0
Other Volume [veh/h]	0	0	0	0	0	0	0	0	0	0	0	0
Total Hourly Volume [veh/h]	87	49	88	144	77	89	36	405	44	17	420	53
Peak Hour Factor	1.0000	1.0000	1.0000	1.0000	1.0000	1.0000	1.0000	1.0000	1.0000	1.0000	1.0000	1.0000
Other Adjustment Factor	1.0000	1.0000	1.0000	1.0000	1.0000	1.0000	1.0000	1.0000	1.0000	1.0000	1.0000	1.0000
Total 15-Minute Volume [veh/h]	22	12	22	36	19	22	9	101	11	4	105	13
Total Analysis Volume [veh/h]	87	49	88	144	77	89	36	405	44	17	420	53
Pedestrian Volume [ped/h]	0			0			0			0		
Bicycle Volume [bicycles/h]	0			0			0			0		

Intersection Settings

Cycle Length [s]	100
Lost time [s]	10.00

Phasing & Timing

Control Type	Permiss	Permiss	Permiss	Permiss	Permiss	Permiss	Permiss	Permiss	Permiss	Permiss	Permiss	Permiss
Signal group	0	1	0	0	1	0	0	1	0	0	1	0
Auxiliary Signal Groups												
Lead / Lag	-	-	-	-	-	-	-	-	-	-	-	-

Movement, Approach, & Intersection Results

V/C, Movement V/C Ratio	0.05	0.09	0.09	0.09	0.10	0.10	0.02	0.28	0.28	0.01	0.30	0.30
Intersection LOS	A											
Intersection V/C	0.594											

Intersection Level Of Service Report
Intersection 8: Wilson Ave & Louise St

Control Type:	Signalized	Delay (sec / veh):	-
Analysis Method:	ICU 1	Level Of Service:	D
Analysis Period:	15 minutes	Volume to Capacity (v/c):	0.866

Intersection Setup

Name	Louise St			Louise St			Wilson Ave			Wilson Ave		
Approach	Northbound			Southbound			Eastbound			Westbound		
Lane Configuration												
Turning Movement	Left	Thru	Right	Left	Thru	Right	Left	Thru	Right	Left	Thru	Right
Lane Width [ft]	12.00	12.00	12.00	12.00	12.00	12.00	12.00	12.00	12.00	12.00	12.00	12.00
No. of Lanes in Pocket	0	0	0	0	0	0	0	0	0	0	0	0
Pocket Length [ft]	100.00	100.00	100.00	100.00	100.00	100.00	100.00	100.00	100.00	100.00	100.00	100.00
Speed [mph]	30.00			30.00			30.00			30.00		
Grade [%]	0.00			0.00			0.00			0.00		
Crosswalk	Yes			Yes			Yes			Yes		

Volumes

Name	Louise St			Louise St			Wilson Ave			Wilson Ave		
Base Volume Input [veh/h]	27	342	81	46	240	37	28	501	99	34	347	41
Base Volume Adjustment Factor	1.0000	1.0000	1.0000	1.0000	1.0000	1.0000	1.0000	1.0000	1.0000	1.0000	1.0000	1.0000
Heavy Vehicles Percentage [%]	2.00	2.00	2.00	2.00	2.00	2.00	2.00	2.00	2.00	2.00	2.00	2.00
Growth Rate	1.04	1.04	1.04	1.04	1.04	1.04	1.04	1.04	1.04	1.04	1.04	1.04
In-Process Volume [veh/h]	12	7	3	0	7	0	0	12	14	2	16	0
Site-Generated Trips [veh/h]	0	0	0	0	0	0	0	0	0	0	0	0
Diverted Trips [veh/h]	0	0	0	0	0	0	0	0	0	0	0	0
Pass-by Trips [veh/h]	0	0	0	0	0	0	0	0	0	0	0	0
Existing Site Adjustment Volume [veh/h]	0	0	0	0	0	0	0	0	0	0	0	0
Other Volume [veh/h]	0	0	0	0	0	0	0	0	0	0	0	0
Total Hourly Volume [veh/h]	40	363	87	48	257	38	29	533	117	37	377	43
Peak Hour Factor	1.0000	1.0000	1.0000	1.0000	1.0000	1.0000	1.0000	1.0000	1.0000	1.0000	1.0000	1.0000
Other Adjustment Factor	1.0000	1.0000	1.0000	1.0000	1.0000	1.0000	1.0000	1.0000	1.0000	1.0000	1.0000	1.0000
Total 15-Minute Volume [veh/h]	10	91	22	12	64	10	7	133	29	9	94	11
Total Analysis Volume [veh/h]	40	363	87	48	257	38	29	533	117	37	377	43
Pedestrian Volume [ped/h]	0			0			0			0		
Bicycle Volume [bicycles/h]	0			0			0			0		

Intersection Settings

Cycle Length [s]	100
Lost time [s]	10.00

Phasing & Timing

Control Type	Permiss	Permiss	Permiss	Permiss	Permiss	Permiss	Permiss	Permiss	Permiss	Permiss	Permiss	Permiss
Signal group	0	1	0	0	1	0	0	1	0	0	1	0
Auxiliary Signal Groups												
Lead / Lag	-	-	-	-	-	-	-	-	-	-	-	-

Movement, Approach, & Intersection Results

V/C, Movement V/C Ratio	0.03	0.31	0.31	0.03	0.21	0.21	0.02	0.41	0.41	0.02	0.26	0.26
Intersection LOS	D											
Intersection V/C	0.866											

Intersection Level Of Service Report
Intersection 9: Wilson Ave & Kenwood St

Control Type:	Signalized	Delay (sec / veh):	-
Analysis Method:	ICU 1	Level Of Service:	B
Analysis Period:	15 minutes	Volume to Capacity (v/c):	0.633

Intersection Setup

Name	Kenwood St			Kenwood St			Wilson Ave			Wilson Ave		
Approach	Northbound			Southbound			Eastbound			Westbound		
Lane Configuration												
Turning Movement	Left	Thru	Right	Left	Thru	Right	Left	Thru	Right	Left	Thru	Right
Lane Width [ft]	12.00	12.00	12.00	12.00	12.00	12.00	12.00	12.00	12.00	12.00	12.00	12.00
No. of Lanes in Pocket	0	0	0	0	0	0	0	0	0	0	0	0
Pocket Length [ft]	100.00	100.00	100.00	100.00	100.00	100.00	100.00	100.00	100.00	100.00	100.00	100.00
Speed [mph]	30.00			30.00			30.00			30.00		
Grade [%]	0.00			0.00			0.00			0.00		
Crosswalk	Yes			Yes			Yes			Yes		

Volumes

Name	Kenwood St			Kenwood St			Wilson Ave			Wilson Ave		
Base Volume Input [veh/h]	17	87	34	21	57	13	44	510	58	24	338	27
Base Volume Adjustment Factor	1.0000	1.0000	1.0000	1.0000	1.0000	1.0000	1.0000	1.0000	1.0000	1.0000	1.0000	1.0000
Heavy Vehicles Percentage [%]	2.00	2.00	2.00	2.00	2.00	2.00	2.00	2.00	2.00	2.00	2.00	2.00
Growth Rate	1.04	1.04	1.04	1.04	1.04	1.04	1.04	1.04	1.04	1.04	1.04	1.04
In-Process Volume [veh/h]	4	0	3	0	0	0	0	6	9	4	14	0
Site-Generated Trips [veh/h]	0	0	0	0	0	0	0	0	0	0	0	0
Diverted Trips [veh/h]	0	0	0	0	0	0	0	0	0	0	0	0
Pass-by Trips [veh/h]	0	0	0	0	0	0	0	0	0	0	0	0
Existing Site Adjustment Volume [veh/h]	0	0	0	0	0	0	0	0	0	0	0	0
Other Volume [veh/h]	0	0	0	0	0	0	0	0	0	0	0	0
Total Hourly Volume [veh/h]	22	90	38	22	59	14	46	536	69	29	366	28
Peak Hour Factor	1.0000	1.0000	1.0000	1.0000	1.0000	1.0000	1.0000	1.0000	1.0000	1.0000	1.0000	1.0000
Other Adjustment Factor	1.0000	1.0000	1.0000	1.0000	1.0000	1.0000	1.0000	1.0000	1.0000	1.0000	1.0000	1.0000
Total 15-Minute Volume [veh/h]	6	23	10	6	15	4	12	134	17	7	92	7
Total Analysis Volume [veh/h]	22	90	38	22	59	14	46	536	69	29	366	28
Pedestrian Volume [ped/h]	0			0			0			0		
Bicycle Volume [bicycles/h]	0			0			0			0		

Intersection Settings

Cycle Length [s]	100
Lost time [s]	10.00

Phasing & Timing

Control Type	Permiss	Permiss	Permiss	Permiss	Permiss	Permiss	Permiss	Permiss	Permiss	Permiss	Permiss	Permiss
Signal group	0	1	0	0	1	0	0	1	0	0	1	0
Auxiliary Signal Groups												
Lead / Lag	-	-	-	-	-	-	-	-	-	-	-	-

Movement, Approach, & Intersection Results

V/C, Movement V/C Ratio	0.01	0.09	0.09	0.01	0.06	0.06	0.03	0.41	0.41	0.02	0.26	0.26
Intersection LOS	B											
Intersection V/C	0.633											

Intersection Level Of Service Report
Intersection 10: Wilson Ave & Jackson St

Control Type:	Signalized	Delay (sec / veh):	-
Analysis Method:	ICU 1	Level Of Service:	C
Analysis Period:	15 minutes	Volume to Capacity (v/c):	0.718

Intersection Setup

Name	Jackson St			Jackson St			Wilson Ave			Wilson Ave		
Approach	Northbound			Southbound			Eastbound			Westbound		
Lane Configuration												
Turning Movement	Left	Thru	Right	Left	Thru	Right	Left	Thru	Right	Left	Thru	Right
Lane Width [ft]	12.00	12.00	12.00	12.00	12.00	12.00	12.00	12.00	12.00	12.00	12.00	12.00
No. of Lanes in Pocket	0	0	0	0	0	0	0	0	0	0	0	0
Pocket Length [ft]	100.00	100.00	100.00	100.00	100.00	100.00	100.00	100.00	100.00	100.00	100.00	100.00
Speed [mph]	30.00			30.00			30.00			30.00		
Grade [%]	0.00			0.00			0.00			0.00		
Crosswalk	Yes			Yes			Yes			Yes		

Volumes

Name	Jackson St			Jackson St			Wilson Ave			Wilson Ave		
Base Volume Input [veh/h]	26	229	59	73	207	28	31	513	32	37	422	86
Base Volume Adjustment Factor	1.0000	1.0000	1.0000	1.0000	1.0000	1.0000	1.0000	1.0000	1.0000	1.0000	1.0000	1.0000
Heavy Vehicles Percentage [%]	2.00	2.00	2.00	2.00	2.00	2.00	2.00	2.00	2.00	2.00	2.00	2.00
Growth Rate	1.04	1.04	1.04	1.04	1.04	1.04	1.04	1.04	1.04	1.04	1.04	1.04
In-Process Volume [veh/h]	0	0	0	0	0	0	0	9	0	0	18	0
Site-Generated Trips [veh/h]	0	0	0	0	0	0	0	0	0	0	0	0
Diverted Trips [veh/h]	0	0	0	0	0	0	0	0	0	0	0	0
Pass-by Trips [veh/h]	0	0	0	0	0	0	0	0	0	0	0	0
Existing Site Adjustment Volume [veh/h]	0	0	0	0	0	0	0	0	0	0	0	0
Other Volume [veh/h]	0	0	0	0	0	0	0	0	0	0	0	0
Total Hourly Volume [veh/h]	27	238	61	76	215	29	32	543	33	38	457	89
Peak Hour Factor	1.0000	1.0000	1.0000	1.0000	1.0000	1.0000	1.0000	1.0000	1.0000	1.0000	1.0000	1.0000
Other Adjustment Factor	1.0000	1.0000	1.0000	1.0000	1.0000	1.0000	1.0000	1.0000	1.0000	1.0000	1.0000	1.0000
Total 15-Minute Volume [veh/h]	7	60	15	19	54	7	8	136	8	10	114	22
Total Analysis Volume [veh/h]	27	238	61	76	215	29	32	543	33	38	457	89
Pedestrian Volume [ped/h]	0			0			0			0		
Bicycle Volume [bicycles/h]	0			0			0			0		

Intersection Settings

Cycle Length [s]	100
Lost time [s]	10.00

Phasing & Timing

Control Type	Permiss	Permiss	Permiss	Permiss	Permiss	Permiss	Permiss	Permiss	Permiss	Permiss	Permiss	Permiss
Signal group	0	1	0	0	1	0	0	1	0	0	1	0
Auxiliary Signal Groups												
Lead / Lag	-	-	-	-	-	-	-	-	-	-	-	-

Movement, Approach, & Intersection Results

V/C, Movement V/C Ratio	0.02	0.19	0.19	0.05	0.15	0.15	0.02	0.36	0.36	0.02	0.34	0.34
Intersection LOS	C											
Intersection V/C	0.718											

Intersection Level Of Service Report
Intersection 11: Wilson Ave & Glendale Ave

Control Type:	Signalized	Delay (sec / veh):	-
Analysis Method:	ICU 1	Level Of Service:	D
Analysis Period:	15 minutes	Volume to Capacity (v/c):	0.808

Intersection Setup

Name							Wilson Ave			Wilson Ave		
Approach	Northbound			Southbound			Eastbound			Westbound		
Lane Configuration												
Turning Movement	Left	Thru	Right	Left	Thru	Right	Left	Thru	Right	Left	Thru	Right
Lane Width [ft]	12.00	12.00	12.00	12.00	12.00	12.00	12.00	12.00	12.00	12.00	12.00	12.00
No. of Lanes in Pocket	0	0	0	0	0	0	0	0	0	0	0	0
Pocket Length [ft]	100.00	100.00	100.00	100.00	100.00	100.00	100.00	100.00	100.00	100.00	100.00	100.00
Speed [mph]	30.00			30.00			30.00			30.00		
Grade [%]	0.00			0.00			0.00			0.00		
Crosswalk	Yes			Yes			Yes			Yes		

Volumes

Name							Wilson Ave			Wilson Ave		
Base Volume Input [veh/h]	93	886	78	167	750	87	204	376	74	56	296	86
Base Volume Adjustment Factor	1.0000	1.0000	1.0000	1.0000	1.0000	1.0000	1.0000	1.0000	1.0000	1.0000	1.0000	1.0000
Heavy Vehicles Percentage [%]	2.00	2.00	2.00	2.00	2.00	2.00	2.00	2.00	2.00	2.00	2.00	2.00
Growth Rate	1.04	1.04	1.04	1.04	1.04	1.04	1.04	1.04	1.04	1.04	1.04	1.04
In-Process Volume [veh/h]	3	12	0	0	8	5	2	6	1	0	10	0
Site-Generated Trips [veh/h]	0	0	0	0	0	0	0	0	0	0	0	0
Diverted Trips [veh/h]	0	0	0	0	0	0	0	0	0	0	0	0
Pass-by Trips [veh/h]	0	0	0	0	0	0	0	0	0	0	0	0
Existing Site Adjustment Volume [veh/h]	0	0	0	0	0	0	0	0	0	0	0	0
Other Volume [veh/h]	0	0	0	0	0	0	0	0	0	0	0	0
Total Hourly Volume [veh/h]	100	933	81	174	788	95	214	397	78	58	318	89
Peak Hour Factor	1.0000	1.0000	1.0000	1.0000	1.0000	1.0000	1.0000	1.0000	1.0000	1.0000	1.0000	1.0000
Other Adjustment Factor	1.0000	1.0000	1.0000	1.0000	1.0000	1.0000	1.0000	1.0000	1.0000	1.0000	1.0000	1.0000
Total 15-Minute Volume [veh/h]	25	233	20	44	197	24	54	99	20	15	80	22
Total Analysis Volume [veh/h]	100	933	81	174	788	95	214	397	78	58	318	89
Pedestrian Volume [ped/h]	0			0			0			0		
Bicycle Volume [bicycles/h]	0			0			0			0		

Intersection Settings

Cycle Length [s]	100
Lost time [s]	10.00

Phasing & Timing

Control Type	Protecte	Permiss	Permiss	Protecte	Permiss	Permiss	Protecte	Permiss	Permiss	Protecte	Permiss	Permiss
Signal group	1	1	0	1	1	0	1	1	0	1	1	0
Auxiliary Signal Groups												
Lead / Lag	Lag	-	-	Lag	-	-	Lag	-	-	Lag	-	-

Movement, Approach, & Intersection Results

V/C, Movement V/C Ratio	0.06	0.21	0.21	0.11	0.25	0.06	0.13	0.25	0.05	0.04	0.25	0.25
Intersection LOS	D											
Intersection V/C	0.808											

Intersection Level Of Service Report
Intersection 12: Broadway & Brand Blvd

Control Type:	Signalized	Delay (sec / veh):	-
Analysis Method:	ICU 1	Level Of Service:	C
Analysis Period:	15 minutes	Volume to Capacity (v/c):	0.765

Intersection Setup

Name	Brand Blvd			Brand Blvd			Broadway			Broadway		
Approach	Northbound			Southbound			Eastbound			Westbound		
Lane Configuration												
Turning Movement	Left	Thru	Right	Left	Thru	Right	Left	Thru	Right	Left	Thru	Right
Lane Width [ft]	12.00	12.00	12.00	12.00	12.00	12.00	12.00	12.00	12.00	12.00	12.00	12.00
No. of Lanes in Pocket	0	0	0	0	0	0	0	0	0	0	0	0
Pocket Length [ft]	100.00	100.00	100.00	100.00	100.00	100.00	100.00	100.00	100.00	100.00	100.00	100.00
Speed [mph]	30.00			30.00			30.00			30.00		
Grade [%]	0.00			0.00			0.00			0.00		
Crosswalk	Yes			Yes			Yes			Yes		

Volumes

Name	Brand Blvd			Brand Blvd			Broadway			Broadway		
Base Volume Input [veh/h]	136	555	125	115	609	140	150	604	73	139	429	139
Base Volume Adjustment Factor	1.0000	1.0000	1.0000	1.0000	1.0000	1.0000	1.0000	1.0000	1.0000	1.0000	1.0000	1.0000
Heavy Vehicles Percentage [%]	2.00	2.00	2.00	2.00	2.00	2.00	2.00	2.00	2.00	2.00	2.00	2.00
Growth Rate	1.05	1.05	1.05	1.05	1.05	1.05	1.05	1.05	1.05	1.05	1.05	1.05
In-Process Volume [veh/h]	10	169	21	7	131	4	10	61	7	25	67	3
Site-Generated Trips [veh/h]	0	0	0	0	0	0	0	0	0	0	0	0
Diverted Trips [veh/h]	0	0	0	0	0	0	0	0	0	0	0	0
Pass-by Trips [veh/h]	0	0	0	0	0	0	0	0	0	0	0	0
Existing Site Adjustment Volume [veh/h]	0	0	0	0	0	0	0	0	0	0	0	0
Other Volume [veh/h]	0	0	0	0	0	0	0	0	0	0	0	0
Total Hourly Volume [veh/h]	153	752	152	128	770	151	168	695	84	171	517	149
Peak Hour Factor	1.0000	1.0000	1.0000	1.0000	1.0000	1.0000	1.0000	1.0000	1.0000	1.0000	1.0000	1.0000
Other Adjustment Factor	1.0000	1.0000	1.0000	1.0000	1.0000	1.0000	1.0000	1.0000	1.0000	1.0000	1.0000	1.0000
Total 15-Minute Volume [veh/h]	38	188	38	32	193	38	42	174	21	43	129	37
Total Analysis Volume [veh/h]	153	752	152	128	770	151	168	695	84	171	517	149
Pedestrian Volume [ped/h]	0			0			0			0		
Bicycle Volume [bicycles/h]	0			0			0			0		

Intersection Settings

Cycle Length [s]	100
Lost time [s]	10.00

Phasing & Timing

Control Type	Protecte	Permiss	Permiss	Protecte	Permiss	Permiss	Protecte	Permiss	Permiss	Protecte	Permiss	Permiss
Signal group	1	1	0	1	1	0	1	1	0	1	1	0
Auxiliary Signal Groups												
Lead / Lag	Lag	-	-	Lag	-	-	Lag	-	-	Lag	-	-

Movement, Approach, & Intersection Results

V/C, Movement V/C Ratio	0.10	0.24	0.10	0.08	0.19	0.19	0.11	0.24	0.24	0.11	0.21	0.21
Intersection LOS	C											
Intersection V/C	0.765											

Intersection Level Of Service Report
Intersection 13: Broadway & Maryland Ave

Control Type:	Signalized	Delay (sec / veh):	-
Analysis Method:	ICU 1	Level Of Service:	A
Analysis Period:	15 minutes	Volume to Capacity (v/c):	0.536

Intersection Setup

Name	Maryland Ave			Maryland Ave			Broadway			Broadway		
Approach	Northbound			Southbound			Eastbound			Westbound		
Lane Configuration												
Turning Movement	Left	Thru	Right	Left	Thru	Right	Left	Thru	Right	Left	Thru	Right
Lane Width [ft]	12.00	12.00	12.00	12.00	12.00	12.00	12.00	12.00	12.00	12.00	12.00	12.00
No. of Lanes in Pocket	0	0	0	0	0	0	0	0	0	0	0	0
Pocket Length [ft]	100.00	100.00	100.00	100.00	100.00	100.00	100.00	100.00	100.00	100.00	100.00	100.00
Speed [mph]	30.00			30.00			30.00			30.00		
Grade [%]	0.00			0.00			0.00			0.00		
Crosswalk	Yes			Yes			Yes			Yes		

Volumes

Name	Maryland Ave			Maryland Ave			Broadway			Broadway		
Base Volume Input [veh/h]	86	13	76	60	16	59	28	696	100	46	541	25
Base Volume Adjustment Factor	1.0000	1.0000	1.0000	1.0000	1.0000	1.0000	1.0000	1.0000	1.0000	1.0000	1.0000	1.0000
Heavy Vehicles Percentage [%]	2.00	2.00	2.00	2.00	2.00	2.00	2.00	2.00	2.00	2.00	2.00	2.00
Growth Rate	1.05	1.05	1.05	1.05	1.05	1.05	1.05	1.05	1.05	1.05	1.05	1.05
In-Process Volume [veh/h]	0	0	0	8	0	4	9	79	0	0	91	17
Site-Generated Trips [veh/h]	0	0	0	0	0	0	0	0	0	0	0	0
Diverted Trips [veh/h]	0	0	0	0	0	0	0	0	0	0	0	0
Pass-by Trips [veh/h]	0	0	0	0	0	0	0	0	0	0	0	0
Existing Site Adjustment Volume [veh/h]	0	0	0	0	0	0	0	0	0	0	0	0
Other Volume [veh/h]	0	0	0	0	0	0	0	0	0	0	0	0
Total Hourly Volume [veh/h]	90	14	80	71	17	66	38	810	105	48	659	43
Peak Hour Factor	1.0000	1.0000	1.0000	1.0000	1.0000	1.0000	1.0000	1.0000	1.0000	1.0000	1.0000	1.0000
Other Adjustment Factor	1.0000	1.0000	1.0000	1.0000	1.0000	1.0000	1.0000	1.0000	1.0000	1.0000	1.0000	1.0000
Total 15-Minute Volume [veh/h]	23	4	20	18	4	17	10	203	26	12	165	11
Total Analysis Volume [veh/h]	90	14	80	71	17	66	38	810	105	48	659	43
Pedestrian Volume [ped/h]	0			0			0			0		
Bicycle Volume [bicycles/h]	0			0			0			0		

Intersection Settings

Cycle Length [s]	100
Lost time [s]	10.00

Phasing & Timing

Control Type	Permiss	Permiss	Permiss	Permiss	Permiss	Permiss	Permiss	Permiss	Permiss	Permiss	Permiss	Permiss
Signal group	0	1	0	0	1	0	0	1	0	0	1	0
Auxiliary Signal Groups												
Lead / Lag	-	-	-	-	-	-	-	-	-	-	-	-

Movement, Approach, & Intersection Results

V/C, Movement V/C Ratio	0.06	0.06	0.06	0.04	0.05	0.05	0.02	0.30	0.30	0.03	0.22	0.22
Intersection LOS	A											
Intersection V/C	0.536											

Intersection Level Of Service Report
Intersection 14: Broadway & Louise St

Control Type:	Signalized	Delay (sec / veh):	-
Analysis Method:	ICU 1	Level Of Service:	B
Analysis Period:	15 minutes	Volume to Capacity (v/c):	0.657

Intersection Setup

Name	Louise St			Louise St			Broadway			Broadway		
Approach	Northbound			Southbound			Eastbound			Westbound		
Lane Configuration												
Turning Movement	Left	Thru	Right	Left	Thru	Right	Left	Thru	Right	Left	Thru	Right
Lane Width [ft]	12.00	12.00	12.00	12.00	12.00	12.00	12.00	12.00	12.00	12.00	12.00	12.00
No. of Lanes in Pocket	0	0	0	0	0	0	0	0	0	0	0	0
Pocket Length [ft]	100.00	100.00	100.00	100.00	100.00	100.00	100.00	100.00	100.00	100.00	100.00	100.00
Speed [mph]	30.00			30.00			30.00			30.00		
Grade [%]	0.00			0.00			0.00			0.00		
Crosswalk	Yes			Yes			Yes			Yes		

Volumes

Name	Louise St			Louise St			Broadway			Broadway		
Base Volume Input [veh/h]	32	259	46	40	261	40	65	691	42	18	554	85
Base Volume Adjustment Factor	1.0000	1.0000	1.0000	1.0000	1.0000	1.0000	1.0000	1.0000	1.0000	1.0000	1.0000	1.0000
Heavy Vehicles Percentage [%]	2.00	2.00	2.00	2.00	2.00	2.00	2.00	2.00	2.00	2.00	2.00	2.00
Growth Rate	1.04	1.04	1.04	1.04	1.04	1.04	1.04	1.04	1.04	1.04	1.04	1.04
In-Process Volume [veh/h]	0	1	0	7	3	14	20	67	0	0	90	8
Site-Generated Trips [veh/h]	0	0	0	0	0	0	0	0	0	0	0	0
Diverted Trips [veh/h]	0	0	0	0	0	0	0	0	0	0	0	0
Pass-by Trips [veh/h]	0	0	0	0	0	0	0	0	0	0	0	0
Existing Site Adjustment Volume [veh/h]	0	0	0	0	0	0	0	0	0	0	0	0
Other Volume [veh/h]	0	0	0	0	0	0	0	0	0	0	0	0
Total Hourly Volume [veh/h]	33	270	48	49	274	56	88	786	44	19	666	96
Peak Hour Factor	1.0000	1.0000	1.0000	1.0000	1.0000	1.0000	1.0000	1.0000	1.0000	1.0000	1.0000	1.0000
Other Adjustment Factor	1.0000	1.0000	1.0000	1.0000	1.0000	1.0000	1.0000	1.0000	1.0000	1.0000	1.0000	1.0000
Total 15-Minute Volume [veh/h]	8	68	12	12	69	14	22	197	11	5	167	24
Total Analysis Volume [veh/h]	33	270	48	49	274	56	88	786	44	19	666	96
Pedestrian Volume [ped/h]	0			0			0			0		
Bicycle Volume [bicycles/h]	0			0			0			0		

Intersection Settings

Cycle Length [s]	100
Lost time [s]	10.00

Phasing & Timing

Control Type	Permiss	Permiss	Permiss	Permiss	Permiss	Permiss	Permiss	Permiss	Permiss	Permiss	Permiss	Permiss
Signal group	0	1	0	0	1	0	0	1	0	0	1	0
Auxiliary Signal Groups												
Lead / Lag	-	-	-	-	-	-	-	-	-	-	-	-

Movement, Approach, & Intersection Results

V/C, Movement V/C Ratio	0.02	0.22	0.22	0.03	0.24	0.24	0.06	0.26	0.26	0.01	0.24	0.24
Intersection LOS	B											
Intersection V/C	0.657											

Intersection Level Of Service Report
Intersection 15: Broadway and Kenwood St

Control Type:	Signalized	Delay (sec / veh):	-
Analysis Method:	ICU 1	Level Of Service:	A
Analysis Period:	15 minutes	Volume to Capacity (v/c):	0.467

Intersection Setup

Name	Kenwood St			Kenwood St			Broadway			Broadway		
Approach	Northbound			Southbound			Eastbound			Westbound		
Lane Configuration												
Turning Movement	Left	Thru	Right	Left	Thru	Right	Left	Thru	Right	Left	Thru	Right
Lane Width [ft]	12.00	12.00	12.00	12.00	12.00	12.00	12.00	12.00	12.00	12.00	12.00	12.00
No. of Lanes in Pocket	0	0	0	0	0	0	0	0	0	0	0	0
Pocket Length [ft]	100.00	100.00	100.00	100.00	100.00	100.00	100.00	100.00	100.00	100.00	100.00	100.00
Speed [mph]	30.00			30.00			30.00			30.00		
Grade [%]	0.00			0.00			0.00			0.00		
Crosswalk	Yes			Yes			Yes			Yes		

Volumes

Name	Kenwood St			Kenwood St			Broadway			Broadway		
Base Volume Input [veh/h]	23	69	26	25	41	48	40	660	18	13	530	32
Base Volume Adjustment Factor	1.0000	1.0000	1.0000	1.0000	1.0000	1.0000	1.0000	1.0000	1.0000	1.0000	1.0000	1.0000
Heavy Vehicles Percentage [%]	2.00	2.00	2.00	2.00	2.00	2.00	2.00	2.00	2.00	2.00	2.00	2.00
Growth Rate	1.04	1.04	1.04	1.04	1.04	1.04	1.04	1.04	1.04	1.04	1.04	1.04
In-Process Volume [veh/h]	4	0	2	4	0	4	9	60	5	4	90	5
Site-Generated Trips [veh/h]	0	0	0	0	0	0	0	0	0	0	0	0
Diverted Trips [veh/h]	0	0	0	0	0	0	0	0	0	0	0	0
Pass-by Trips [veh/h]	0	0	0	0	0	0	0	0	0	0	0	0
Existing Site Adjustment Volume [veh/h]	0	0	0	0	0	0	0	0	0	0	0	0
Other Volume [veh/h]	0	0	0	0	0	0	0	0	0	0	0	0
Total Hourly Volume [veh/h]	28	72	29	30	43	54	51	746	24	18	641	38
Peak Hour Factor	1.0000	1.0000	1.0000	1.0000	1.0000	1.0000	1.0000	1.0000	1.0000	1.0000	1.0000	1.0000
Other Adjustment Factor	1.0000	1.0000	1.0000	1.0000	1.0000	1.0000	1.0000	1.0000	1.0000	1.0000	1.0000	1.0000
Total 15-Minute Volume [veh/h]	7	18	7	8	11	14	13	187	6	5	160	10
Total Analysis Volume [veh/h]	28	72	29	30	43	54	51	746	24	18	641	38
Pedestrian Volume [ped/h]	0			0			0			0		
Bicycle Volume [bicycles/h]	0			0			0			0		

Intersection Settings

Cycle Length [s]	100
Lost time [s]	10.00

Phasing & Timing

Control Type	Permiss	Permiss	Permiss	Permiss	Permiss	Permiss	Permiss	Permiss	Permiss	Permiss	Permiss	Permiss
Signal group	0	1	0	0	1	0	0	1	0	0	1	0
Auxiliary Signal Groups												
Lead / Lag	-	-	-	-	-	-	-	-	-	-	-	-

Movement, Approach, & Intersection Results

V/C, Movement V/C Ratio	0.02	0.08	0.08	0.02	0.08	0.08	0.03	0.26	0.26	0.01	0.22	0.22
Intersection LOS	A											
Intersection V/C	0.467											

Intersection Level Of Service Report
Intersection 16: Broadway & Jackon St

Control Type:	Signalized	Delay (sec / veh):	-
Analysis Method:	ICU 1	Level Of Service:	A
Analysis Period:	15 minutes	Volume to Capacity (v/c):	0.557

Intersection Setup

Name	Jackson St			Jackson St			Broadway			Broadway		
Approach	Northbound			Southbound			Eastbound			Westbound		
Lane Configuration												
Turning Movement	Left	Thru	Right	Left	Thru	Right	Left	Thru	Right	Left	Thru	Right
Lane Width [ft]	12.00	12.00	12.00	12.00	12.00	12.00	12.00	12.00	12.00	12.00	12.00	12.00
No. of Lanes in Pocket	0	0	0	0	0	0	0	0	0	0	0	0
Pocket Length [ft]	100.00	100.00	100.00	100.00	100.00	100.00	100.00	100.00	100.00	100.00	100.00	100.00
Speed [mph]	30.00			30.00			30.00			30.00		
Grade [%]	0.00			0.00			0.00			0.00		
Crosswalk	Yes			Yes			Yes			Yes		

Volumes

Name	Jackson St			Jackson St			Broadway			Broadway		
Base Volume Input [veh/h]	26	168	41	65	141	39	36	639	18	24	531	58
Base Volume Adjustment Factor	1.0000	1.0000	1.0000	1.0000	1.0000	1.0000	1.0000	1.0000	1.0000	1.0000	1.0000	1.0000
Heavy Vehicles Percentage [%]	2.00	2.00	2.00	2.00	2.00	2.00	2.00	2.00	2.00	2.00	2.00	2.00
Growth Rate	1.04	1.04	1.04	1.04	1.04	1.04	1.04	1.04	1.04	1.04	1.04	1.04
In-Process Volume [veh/h]	0	0	0	0	0	0	0	66	0	0	99	0
Site-Generated Trips [veh/h]	0	0	0	0	0	0	0	0	0	0	0	0
Diverted Trips [veh/h]	0	0	0	0	0	0	0	0	0	0	0	0
Pass-by Trips [veh/h]	0	0	0	0	0	0	0	0	0	0	0	0
Existing Site Adjustment Volume [veh/h]	0	0	0	0	0	0	0	0	0	0	0	0
Other Volume [veh/h]	0	0	0	0	0	0	0	0	0	0	0	0
Total Hourly Volume [veh/h]	27	175	43	68	147	41	37	731	19	25	651	60
Peak Hour Factor	1.0000	1.0000	1.0000	1.0000	1.0000	1.0000	1.0000	1.0000	1.0000	1.0000	1.0000	1.0000
Other Adjustment Factor	1.0000	1.0000	1.0000	1.0000	1.0000	1.0000	1.0000	1.0000	1.0000	1.0000	1.0000	1.0000
Total 15-Minute Volume [veh/h]	7	44	11	17	37	10	9	183	5	6	163	15
Total Analysis Volume [veh/h]	27	175	43	68	147	41	37	731	19	25	651	60
Pedestrian Volume [ped/h]	0			0			0			0		
Bicycle Volume [bicycles/h]	0			0			0			0		

Intersection Settings

Cycle Length [s]	100
Lost time [s]	10.00

Phasing & Timing

Control Type	Permiss	Permiss	Permiss	Permiss	Permiss	Permiss	Permiss	Permiss	Permiss	Permiss	Permiss	Permiss
Signal group	0	1	0	0	1	0	0	1	0	0	1	0
Auxiliary Signal Groups												
Lead / Lag	-	-	-	-	-	-	-	-	-	-	-	-

Movement, Approach, & Intersection Results

V/C, Movement V/C Ratio	0.02	0.15	0.15	0.04	0.12	0.12	0.02	0.25	0.25	0.02	0.23	0.23
Intersection LOS	A											
Intersection V/C	0.557											

Intersection Level Of Service Report
Intersection 1: Brand Blvd & California Ave

Control Type:	Signalized	Delay (sec / veh):	-
Analysis Method:	ICU 1	Level Of Service:	C
Analysis Period:	15 minutes	Volume to Capacity (v/c):	0.752

Intersection Setup

Name	Brand Blvd			Brand Blvd			California Ave			Calfornia Ave		
Approach	Northbound			Southbound			Eastbound			Westbound		
Lane Configuration												
Turning Movement	Left	Thru	Right	Left	Thru	Right	Left	Thru	Right	Left	Thru	Right
Lane Width [ft]	12.00	12.00	12.00	12.00	12.00	12.00	12.00	12.00	12.00	12.00	12.00	12.00
No. of Lanes in Pocket	0	0	0	0	0	0	0	0	0	0	0	0
Pocket Length [ft]	100.00	100.00	100.00	100.00	100.00	100.00	100.00	100.00	100.00	100.00	100.00	100.00
Speed [mph]	30.00			30.00			30.00			30.00		
Grade [%]	0.00			0.00			0.00			0.00		
Crosswalk	Yes			Yes			Yes			Yes		

Volumes

Name	Brand Blvd			Brand Blvd			California Ave			Calfornia Ave		
Base Volume Input [veh/h]	62	645	67	68	762	99	47	218	57	42	202	83
Base Volume Adjustment Factor	1.0000	1.0000	1.0000	1.0000	1.0000	1.0000	1.0000	1.0000	1.0000	1.0000	1.0000	1.0000
Heavy Vehicles Percentage [%]	2.00	2.00	2.00	2.00	2.00	2.00	2.00	2.00	2.00	2.00	2.00	2.00
Growth Rate	1.05	1.05	1.05	1.05	1.05	1.05	1.05	1.05	1.05	1.05	1.05	1.05
In-Process Volume [veh/h]	14	154	8	16	151	12	7	12	8	8	19	10
Site-Generated Trips [veh/h]	0	0	0	8	0	0	0	1	0	0	-1	-4
Diverted Trips [veh/h]	0	0	0	0	0	0	0	0	0	0	0	0
Pass-by Trips [veh/h]	0	0	0	0	0	0	0	0	0	0	0	0
Existing Site Adjustment Volume [veh/h]	0	0	0	0	0	0	0	0	0	0	0	0
Other Volume [veh/h]	0	0	0	0	0	0	0	0	0	0	0	0
Total Hourly Volume [veh/h]	79	831	78	95	951	116	56	242	68	52	230	93
Peak Hour Factor	1.0000	1.0000	1.0000	1.0000	1.0000	1.0000	1.0000	1.0000	1.0000	1.0000	1.0000	1.0000
Other Adjustment Factor	1.0000	1.0000	1.0000	1.0000	1.0000	1.0000	1.0000	1.0000	1.0000	1.0000	1.0000	1.0000
Total 15-Minute Volume [veh/h]	20	208	20	24	238	29	14	61	17	13	58	23
Total Analysis Volume [veh/h]	79	831	78	95	951	116	56	242	68	52	230	93
Pedestrian Volume [ped/h]	0			0			0			0		
Bicycle Volume [bicycles/h]	0			0			0			0		

Intersection Settings

Cycle Length [s]	100
Lost time [s]	10.00

Phasing & Timing

Control Type	Protecte	Permiss	Permiss	Protecte	Permiss	Permiss	Permiss	Permiss	Permiss	Permiss	Permiss	Permiss
Signal group	1	1	0	1	1	0	0	1	0	0	1	0
Auxiliary Signal Groups												
Lead / Lag	Lag	-	-	Lag	-	-	-	-	-	-	-	-

Movement, Approach, & Intersection Results

V/C, Movement V/C Ratio	0.05	0.28	0.28	0.06	0.33	0.33	0.04	0.23	0.23	0.03	0.23	0.23
Intersection LOS	C											
Intersection V/C	0.752											

Intersection Level Of Service Report
Intersection 2: California Ave & Maryland Ave

Control Type:	Signalized	Delay (sec / veh):	-
Analysis Method:	ICU 1	Level Of Service:	B
Analysis Period:	15 minutes	Volume to Capacity (v/c):	0.669

Intersection Setup

Name	Maryland Ave			Maryland Ave			Calfornia Ave			California Ave		
Approach	Northbound			Southbound			Eastbound			Westbound		
Lane Configuration												
Turning Movement	Left	Thru	Right	Left	Thru	Right	Left	Thru	Right	Left	Thru	Right
Lane Width [ft]	12.00	12.00	12.00	12.00	12.00	12.00	12.00	12.00	12.00	12.00	12.00	12.00
No. of Lanes in Pocket	0	0	0	0	0	0	0	0	0	0	0	0
Pocket Length [ft]	100.00	100.00	100.00	100.00	100.00	100.00	100.00	100.00	100.00	100.00	100.00	100.00
Speed [mph]	30.00			30.00			30.00			30.00		
Grade [%]	0.00			0.00			0.00			0.00		
Crosswalk	Yes			Yes			Yes			Yes		

Volumes

Name	Maryland Ave			Maryland Ave			Calfornia Ave			California Ave		
Base Volume Input [veh/h]	80	221	47	15	75	33	23	239	50	16	258	47
Base Volume Adjustment Factor	1.0000	1.0000	1.0000	1.0000	1.0000	1.0000	1.0000	1.0000	1.0000	1.0000	1.0000	1.0000
Heavy Vehicles Percentage [%]	2.00	2.00	2.00	2.00	2.00	2.00	2.00	2.00	2.00	2.00	2.00	2.00
Growth Rate	1.05	1.05	1.05	1.05	1.05	1.05	1.05	1.05	1.05	1.05	1.05	1.05
In-Process Volume [veh/h]	20	8	2	0	10	0	0	6	30	4	16	0
Site-Generated Trips [veh/h]	0	0	0	0	0	0	0	9	0	0	-5	0
Diverted Trips [veh/h]	0	0	0	0	0	0	0	0	0	0	0	0
Pass-by Trips [veh/h]	0	0	0	0	0	0	0	0	0	0	0	0
Existing Site Adjustment Volume [veh/h]	0	0	0	0	0	0	0	0	0	0	0	0
Other Volume [veh/h]	0	0	0	0	0	0	0	0	0	0	0	0
Total Hourly Volume [veh/h]	104	240	51	16	89	35	24	266	83	21	282	49
Peak Hour Factor	1.0000	1.0000	1.0000	1.0000	1.0000	1.0000	1.0000	1.0000	1.0000	1.0000	1.0000	1.0000
Other Adjustment Factor	1.0000	1.0000	1.0000	1.0000	1.0000	1.0000	1.0000	1.0000	1.0000	1.0000	1.0000	1.0000
Total 15-Minute Volume [veh/h]	26	60	13	4	22	9	6	67	21	5	71	12
Total Analysis Volume [veh/h]	104	240	51	16	89	35	24	266	83	21	282	49
Pedestrian Volume [ped/h]	0			0			0			0		
Bicycle Volume [bicycles/h]	0			0			0			0		

Intersection Settings

Cycle Length [s]	100
Lost time [s]	10.00

Phasing & Timing

Control Type	Split	Split	Split	Split	Split	Split	Permiss	Permiss	Permiss	Permiss	Permiss	Permiss
Signal group	0	1	0	0	1	0	0	1	0	0	1	0
Auxiliary Signal Groups												
Lead / Lag	-	-	-	-	-	-	-	-	-	-	-	-

Movement, Approach, & Intersection Results

V/C, Movement V/C Ratio	0.07	0.25	0.25	0.01	0.09	0.09	0.02	0.18	0.05	0.01	0.22	0.22
Intersection LOS	B											
Intersection V/C	0.669											

Intersection Level Of Service Report
Intersection 3: California Ave & Louise St

Control Type:	All-way stop	Delay (sec / veh):	42.5
Analysis Method:	HCM 2010	Level Of Service:	E
Analysis Period:	15 minutes	Volume to Capacity (v/c):	0.923

Intersection Setup

Name	Louise St			Louise St			California Ave			California Ave		
Approach	Northbound			Southbound			Eastbound			Westbound		
Lane Configuration												
Turning Movement	Left	Thru	Right	Left	Thru	Right	Left	Thru	Right	Left	Thru	Right
Lane Width [ft]	12.00	12.00	12.00	12.00	12.00	12.00	12.00	12.00	12.00	12.00	12.00	12.00
No. of Lanes in Pocket	0	0	0	0	0	0	0	0	0	0	0	0
Pocket Length [ft]	100.00	100.00	100.00	100.00	100.00	100.00	100.00	100.00	100.00	100.00	100.00	100.00
Speed [mph]	30.00			30.00			30.00			30.00		
Grade [%]	0.00			0.00			0.00			0.00		
Crosswalk	Yes			Yes			Yes			Yes		

Volumes

Name	Louise St			Louise St			California Ave			California Ave		
Base Volume Input [veh/h]	34	266	40	60	244	30	28	311	36	18	217	35
Base Volume Adjustment Factor	1.0000	1.0000	1.0000	1.0000	1.0000	1.0000	1.0000	1.0000	1.0000	1.0000	1.0000	1.0000
Heavy Vehicles Percentage [%]	2.00	2.00	2.00	2.00	2.00	2.00	2.00	2.00	2.00	2.00	2.00	2.00
Growth Rate	1.04	1.04	1.04	1.04	1.04	1.04	1.04	1.04	1.04	1.04	1.04	1.04
In-Process Volume [veh/h]	2	3	2	0	2	0	0	6	2	2	18	0
Site-Generated Trips [veh/h]	0	0	0	0	0	0	0	9	0	0	-5	0
Diverted Trips [veh/h]	0	0	0	0	0	0	0	0	0	0	0	0
Pass-by Trips [veh/h]	0	0	0	0	0	0	0	0	0	0	0	0
Existing Site Adjustment Volume [veh/h]	0	0	0	0	0	0	0	0	0	0	0	0
Other Volume [veh/h]	0	0	0	0	0	0	0	0	0	0	0	0
Total Hourly Volume [veh/h]	37	280	44	62	256	31	29	338	39	21	239	36
Peak Hour Factor	1.0000	1.0000	1.0000	1.0000	1.0000	1.0000	1.0000	1.0000	1.0000	1.0000	1.0000	1.0000
Other Adjustment Factor	1.0000	1.0000	1.0000	1.0000	1.0000	1.0000	1.0000	1.0000	1.0000	1.0000	1.0000	1.0000
Total 15-Minute Volume [veh/h]	9	70	11	16	64	8	7	85	10	5	60	9
Total Analysis Volume [veh/h]	37	280	44	62	256	31	29	338	39	21	239	36
Pedestrian Volume [ped/h]	0			0			0			0		

Intersection Settings

Lanes

Capacity per Entry Lane [veh/h]	431	427	440	417
Degree of Utilization, x	0.84	0.82	0.92	0.71

Movement, Approach, & Intersection Results

95th-Percentile Queue Length [veh]	8.06	7.56	10.39	5.41
95th-Percentile Queue Length [ft]	201.40	189.10	259.84	135.15
Approach Delay [s/veh]	41.77	39.57	54.60	30.13
Approach LOS	E	E	F	D
Intersection Delay [s/veh]	42.48			
Intersection LOS	E			

Intersection Level Of Service Report
Intersection 4: California Ave & Kenwood St

Control Type:	All-way stop	Delay (sec / veh):	13.6
Analysis Method:	HCM 2010	Level Of Service:	B
Analysis Period:	15 minutes	Volume to Capacity (v/c):	0.592

Intersection Setup

Name	Kenwood St			Kenwood St			California Ave			California Ave		
Approach	Northbound			Southbound			Eastbound			Westbound		
Lane Configuration												
Turning Movement	Left	Thru	Right	Left	Thru	Right	Left	Thru	Right	Left	Thru	Right
Lane Width [ft]	12.00	12.00	12.00	12.00	12.00	12.00	12.00	12.00	12.00	12.00	12.00	12.00
No. of Lanes in Pocket	0	0	0	0	0	0	0	0	0	0	0	0
Pocket Length [ft]	100.00	100.00	100.00	100.00	100.00	100.00	100.00	100.00	100.00	100.00	100.00	100.00
Speed [mph]	30.00			30.00			30.00			30.00		
Grade [%]	0.00			0.00			0.00			0.00		
Crosswalk	Yes			Yes			Yes			Yes		

Volumes

Name	Kenwood St			Kenwood St			California Ave			California Ave		
Base Volume Input [veh/h]	40	91	36	10	61	12	18	337	21	9	276	12
Base Volume Adjustment Factor	1.0000	1.0000	1.0000	1.0000	1.0000	1.0000	1.0000	1.0000	1.0000	1.0000	1.0000	1.0000
Heavy Vehicles Percentage [%]	2.00	2.00	2.00	2.00	2.00	2.00	2.00	2.00	2.00	2.00	2.00	2.00
Growth Rate	1.04	1.04	1.04	1.04	1.04	1.04	1.04	1.04	1.04	1.04	1.04	1.04
In-Process Volume [veh/h]	0	0	0	0	0	0	0	8	0	0	20	0
Site-Generated Trips [veh/h]	0	0	0	0	0	0	0	9	0	0	-5	0
Diverted Trips [veh/h]	0	0	0	0	0	0	0	0	0	0	0	0
Pass-by Trips [veh/h]	0	0	0	0	0	0	0	0	0	0	0	0
Existing Site Adjustment Volume [veh/h]	0	0	0	0	0	0	0	0	0	0	0	0
Other Volume [veh/h]	0	0	0	0	0	0	0	0	0	0	0	0
Total Hourly Volume [veh/h]	42	95	37	10	63	12	19	367	22	9	302	12
Peak Hour Factor	1.0000	1.0000	1.0000	1.0000	1.0000	1.0000	1.0000	1.0000	1.0000	1.0000	1.0000	1.0000
Other Adjustment Factor	1.0000	1.0000	1.0000	1.0000	1.0000	1.0000	1.0000	1.0000	1.0000	1.0000	1.0000	1.0000
Total 15-Minute Volume [veh/h]	11	24	9	3	16	3	5	92	6	2	76	3
Total Analysis Volume [veh/h]	42	95	37	10	63	12	19	367	22	9	302	12
Pedestrian Volume [ped/h]	0			0			0			0		

Intersection Settings

Lanes

Capacity per Entry Lane [veh/h]	605	581	690	674
Degree of Utilization, x	0.29	0.15	0.59	0.48

Movement, Approach, & Intersection Results

95th-Percentile Queue Length [veh]	1.19	0.51	3.91	2.61
95th-Percentile Queue Length [ft]	29.67	12.75	97.82	65.24
Approach Delay [s/veh]	11.35	10.26	15.50	13.17
Approach LOS	B	B	C	B
Intersection Delay [s/veh]	13.56			
Intersection LOS	B			

Intersection Level Of Service Report
Intersection 5: California Ave & Jackson St

Control Type:	All-way stop	Delay (sec / veh):	79.3
Analysis Method:	HCM 2010	Level Of Service:	F
Analysis Period:	15 minutes	Volume to Capacity (v/c):	1.089

Intersection Setup

Name	Jackson St			Jackson St			California Ave			California Ave		
Approach	Northbound			Southbound			Eastbound			Westbound		
Lane Configuration												
Turning Movement	Left	Thru	Right	Left	Thru	Right	Left	Thru	Right	Left	Thru	Right
Lane Width [ft]	12.00	12.00	12.00	12.00	12.00	12.00	12.00	12.00	12.00	12.00	12.00	12.00
No. of Lanes in Pocket	0	0	0	0	0	0	0	0	0	0	0	0
Pocket Length [ft]	100.00	100.00	100.00	100.00	100.00	100.00	100.00	100.00	100.00	100.00	100.00	100.00
Speed [mph]	30.00			30.00			30.00			30.00		
Grade [%]	0.00			0.00			0.00			0.00		
Crosswalk	Yes			Yes			Yes			Yes		

Volumes

Name	Jackson St			Jackson St			California Ave			California Ave		
Base Volume Input [veh/h]	23	301	58	62	243	15	19	345	15	18	269	62
Base Volume Adjustment Factor	1.0000	1.0000	1.0000	1.0000	1.0000	1.0000	1.0000	1.0000	1.0000	1.0000	1.0000	1.0000
Heavy Vehicles Percentage [%]	2.00	2.00	2.00	2.00	2.00	2.00	2.00	2.00	2.00	2.00	2.00	2.00
Growth Rate	1.04	1.04	1.04	1.04	1.04	1.04	1.04	1.04	1.04	1.04	1.04	1.04
In-Process Volume [veh/h]	0	0	0	0	0	0	0	8	0	0	20	0
Site-Generated Trips [veh/h]	-5	-4	-1	0	9	0	0	0	9	2	0	0
Diverted Trips [veh/h]	0	0	0	0	0	0	0	0	0	0	0	0
Pass-by Trips [veh/h]	0	0	0	0	0	0	0	0	0	0	0	0
Existing Site Adjustment Volume [veh/h]	0	0	0	0	0	0	0	0	0	0	0	0
Other Volume [veh/h]	0	0	0	0	0	0	0	0	0	0	0	0
Total Hourly Volume [veh/h]	19	309	59	64	262	16	20	367	25	21	300	64
Peak Hour Factor	1.0000	1.0000	1.0000	1.0000	1.0000	1.0000	1.0000	1.0000	1.0000	1.0000	1.0000	1.0000
Other Adjustment Factor	1.0000	1.0000	1.0000	1.0000	1.0000	1.0000	1.0000	1.0000	1.0000	1.0000	1.0000	1.0000
Total 15-Minute Volume [veh/h]	5	77	15	16	66	4	5	92	6	5	75	16
Total Analysis Volume [veh/h]	19	309	59	64	262	16	20	367	25	21	300	64
Pedestrian Volume [ped/h]	0			0			0			0		

Intersection Settings

Lanes

Capacity per Entry Lane [veh/h]	388	376	412	388
Degree of Utilization, x	1.00	0.91	1.09	0.99

Movement, Approach, & Intersection Results

95th-Percentile Queue Length [veh]	11.95	9.41	14.71	11.86
95th-Percentile Queue Length [ft]	298.84	235.21	367.75	296.61
Approach Delay [s/veh]	75.86	58.18	103.68	75.35
Approach LOS	F	F	F	F
Intersection Delay [s/veh]	79.28			
Intersection LOS	F			

Intersection Level Of Service Report
Intersection 6: Wilson Ave & Brand Blvd

Control Type:	Signalized	Delay (sec / veh):	-
Analysis Method:	ICU 1	Level Of Service:	C
Analysis Period:	15 minutes	Volume to Capacity (v/c):	0.721

Intersection Setup

Name	Brand Blvd			Brand Blvd			Wilson Ave			Wilson Ave		
Approach	Northbound			Southbound			Eastbound			Westbound		
Lane Configuration												
Turning Movement	Left	Thru	Right	Left	Thru	Right	Left	Thru	Right	Left	Thru	Right
Lane Width [ft]	12.00	12.00	12.00	12.00	12.00	12.00	12.00	12.00	12.00	12.00	12.00	12.00
No. of Lanes in Pocket	0	0	0	0	0	0	0	0	0	0	0	0
Pocket Length [ft]	100.00	100.00	100.00	100.00	100.00	100.00	100.00	100.00	100.00	100.00	100.00	100.00
Speed [mph]	30.00			30.00			30.00			30.00		
Grade [%]	0.00			0.00			0.00			0.00		
Crosswalk	Yes			Yes			Yes			Yes		

Volumes

Name	Brand Blvd			Brand Blvd			Wilson Ave			Wilson Ave		
Base Volume Input [veh/h]	64	541	51	98	726	74	35	286	79	98	316	94
Base Volume Adjustment Factor	1.0000	1.0000	1.0000	1.0000	1.0000	1.0000	1.0000	1.0000	1.0000	1.0000	1.0000	1.0000
Heavy Vehicles Percentage [%]	2.00	2.00	2.00	2.00	2.00	2.00	2.00	2.00	2.00	2.00	2.00	2.00
Growth Rate	1.05	1.05	1.05	1.05	1.05	1.05	1.05	1.05	1.05	1.05	1.05	1.05
In-Process Volume [veh/h]	11	147	26	22	125	20	16	14	10	7	16	12
Site-Generated Trips [veh/h]	0	0	7	0	0	0	0	2	0	-3	-1	0
Diverted Trips [veh/h]	0	0	0	0	0	0	0	0	0	0	0	0
Pass-by Trips [veh/h]	0	0	0	0	0	0	0	0	0	0	0	0
Existing Site Adjustment Volume [veh/h]	0	0	0	0	0	0	0	0	0	0	0	0
Other Volume [veh/h]	0	0	0	0	0	0	0	0	0	0	0	0
Total Hourly Volume [veh/h]	78	715	87	125	887	98	53	316	93	107	347	111
Peak Hour Factor	1.0000	1.0000	1.0000	1.0000	1.0000	1.0000	1.0000	1.0000	1.0000	1.0000	1.0000	1.0000
Other Adjustment Factor	1.0000	1.0000	1.0000	1.0000	1.0000	1.0000	1.0000	1.0000	1.0000	1.0000	1.0000	1.0000
Total 15-Minute Volume [veh/h]	20	179	22	31	222	25	13	79	23	27	87	28
Total Analysis Volume [veh/h]	78	715	87	125	887	98	53	316	93	107	347	111
Pedestrian Volume [ped/h]	0			0			0			0		
Bicycle Volume [bicycles/h]	0			0			0			0		

Intersection Settings

Cycle Length [s]	100
Lost time [s]	10.00

Phasing & Timing

Control Type	Protecte	Permiss	Permiss	Protecte	Permiss	Permiss	Permiss	Permiss	Permiss	Permiss	Permiss	Permiss
Signal group	1	1	0	1	1	0	0	1	0	0	1	0
Auxiliary Signal Groups												
Lead / Lag	Lag	-	-	Lag	-	-	-	-	-	-	-	-

Movement, Approach, & Intersection Results

V/C, Movement V/C Ratio	0.05	0.25	0.25	0.08	0.31	0.31	0.03	0.20	0.06	0.07	0.22	0.07
Intersection LOS	C											
Intersection V/C	0.721											

Intersection Level Of Service Report
Intersection 7: Wilson Ave & Maryland Ave

Control Type:	Signalized	Delay (sec / veh):	-
Analysis Method:	ICU 1	Level Of Service:	A
Analysis Period:	15 minutes	Volume to Capacity (v/c):	0.591

Intersection Setup

Name	Maryland Ave			Maryland Ave			Wilson Ave			Wilson Ave		
Approach	Northbound			Southbound			Eastbound			Westbound		
Lane Configuration												
Turning Movement	Left	Thru	Right	Left	Thru	Right	Left	Thru	Right	Left	Thru	Right
Lane Width [ft]	12.00	12.00	12.00	12.00	12.00	12.00	12.00	12.00	12.00	12.00	12.00	12.00
No. of Lanes in Pocket	0	0	0	0	0	0	0	0	0	0	0	0
Pocket Length [ft]	100.00	100.00	100.00	100.00	100.00	100.00	100.00	100.00	100.00	100.00	100.00	100.00
Speed [mph]	30.00			30.00			30.00			30.00		
Grade [%]	0.00			0.00			0.00			0.00		
Crosswalk	Yes			Yes			Yes			Yes		

Volumes

Name	Maryland Ave			Maryland Ave			Wilson Ave			Wilson Ave		
Base Volume Input [veh/h]	78	27	84	136	63	75	20	362	41	16	375	49
Base Volume Adjustment Factor	1.0000	1.0000	1.0000	1.0000	1.0000	1.0000	1.0000	1.0000	1.0000	1.0000	1.0000	1.0000
Heavy Vehicles Percentage [%]	2.00	2.00	2.00	2.00	2.00	2.00	2.00	2.00	2.00	2.00	2.00	2.00
Growth Rate	1.05	1.05	1.05	1.05	1.05	1.05	1.05	1.05	1.05	1.05	1.05	1.05
In-Process Volume [veh/h]	5	21	0	1	11	10	15	25	1	0	26	2
Site-Generated Trips [veh/h]	0	0	0	0	0	0	0	9	0	0	-4	0
Diverted Trips [veh/h]	0	0	0	0	0	0	0	0	0	0	0	0
Pass-by Trips [veh/h]	0	0	0	0	0	0	0	0	0	0	0	0
Existing Site Adjustment Volume [veh/h]	0	0	0	0	0	0	0	0	0	0	0	0
Other Volume [veh/h]	0	0	0	0	0	0	0	0	0	0	0	0
Total Hourly Volume [veh/h]	87	49	88	144	77	89	36	414	44	17	416	53
Peak Hour Factor	1.0000	1.0000	1.0000	1.0000	1.0000	1.0000	1.0000	1.0000	1.0000	1.0000	1.0000	1.0000
Other Adjustment Factor	1.0000	1.0000	1.0000	1.0000	1.0000	1.0000	1.0000	1.0000	1.0000	1.0000	1.0000	1.0000
Total 15-Minute Volume [veh/h]	22	12	22	36	19	22	9	104	11	4	104	13
Total Analysis Volume [veh/h]	87	49	88	144	77	89	36	414	44	17	416	53
Pedestrian Volume [ped/h]	0			0			0			0		
Bicycle Volume [bicycles/h]	0			0			0			0		

Intersection Settings

Cycle Length [s]	100
Lost time [s]	10.00

Phasing & Timing

Control Type	Permiss	Permiss	Permiss	Permiss	Permiss	Permiss	Permiss	Permiss	Permiss	Permiss	Permiss	Permiss
Signal group	0	1	0	0	1	0	0	1	0	0	1	0
Auxiliary Signal Groups												
Lead / Lag	-	-	-	-	-	-	-	-	-	-	-	-

Movement, Approach, & Intersection Results

V/C, Movement V/C Ratio	0.05	0.09	0.09	0.09	0.10	0.10	0.02	0.29	0.29	0.01	0.29	0.29
Intersection LOS	A											
Intersection V/C	0.591											

Intersection Level Of Service Report
Intersection 8: Wilson Ave & Louise St

Control Type:	Signalized	Delay (sec / veh):	-
Analysis Method:	ICU 1	Level Of Service:	D
Analysis Period:	15 minutes	Volume to Capacity (v/c):	0.871

Intersection Setup

Name	Louise St			Louise St			Wilson Ave			Wilson Ave		
Approach	Northbound			Southbound			Eastbound			Westbound		
Lane Configuration												
Turning Movement	Left	Thru	Right	Left	Thru	Right	Left	Thru	Right	Left	Thru	Right
Lane Width [ft]	12.00	12.00	12.00	12.00	12.00	12.00	12.00	12.00	12.00	12.00	12.00	12.00
No. of Lanes in Pocket	0	0	0	0	0	0	0	0	0	0	0	0
Pocket Length [ft]	100.00	100.00	100.00	100.00	100.00	100.00	100.00	100.00	100.00	100.00	100.00	100.00
Speed [mph]	30.00			30.00			30.00			30.00		
Grade [%]	0.00			0.00			0.00			0.00		
Crosswalk	Yes			Yes			Yes			Yes		

Volumes

Name	Louise St			Louise St			Wilson Ave			Wilson Ave		
Base Volume Input [veh/h]	27	342	81	46	240	37	28	501	99	34	347	41
Base Volume Adjustment Factor	1.0000	1.0000	1.0000	1.0000	1.0000	1.0000	1.0000	1.0000	1.0000	1.0000	1.0000	1.0000
Heavy Vehicles Percentage [%]	2.00	2.00	2.00	2.00	2.00	2.00	2.00	2.00	2.00	2.00	2.00	2.00
Growth Rate	1.04	1.04	1.04	1.04	1.04	1.04	1.04	1.04	1.04	1.04	1.04	1.04
In-Process Volume [veh/h]	12	7	3	0	7	0	0	12	14	2	16	0
Site-Generated Trips [veh/h]	0	0	0	0	0	0	0	9	0	0	-4	0
Diverted Trips [veh/h]	0	0	0	0	0	0	0	0	0	0	0	0
Pass-by Trips [veh/h]	0	0	0	0	0	0	0	0	0	0	0	0
Existing Site Adjustment Volume [veh/h]	0	0	0	0	0	0	0	0	0	0	0	0
Other Volume [veh/h]	0	0	0	0	0	0	0	0	0	0	0	0
Total Hourly Volume [veh/h]	40	363	87	48	257	38	29	542	117	37	373	43
Peak Hour Factor	1.0000	1.0000	1.0000	1.0000	1.0000	1.0000	1.0000	1.0000	1.0000	1.0000	1.0000	1.0000
Other Adjustment Factor	1.0000	1.0000	1.0000	1.0000	1.0000	1.0000	1.0000	1.0000	1.0000	1.0000	1.0000	1.0000
Total 15-Minute Volume [veh/h]	10	91	22	12	64	10	7	136	29	9	93	11
Total Analysis Volume [veh/h]	40	363	87	48	257	38	29	542	117	37	373	43
Pedestrian Volume [ped/h]	0			0			0			0		
Bicycle Volume [bicycles/h]	0			0			0			0		

Intersection Settings

Cycle Length [s]	100
Lost time [s]	10.00

Phasing & Timing

Control Type	Permiss	Permiss	Permiss	Permiss	Permiss	Permiss	Permiss	Permiss	Permiss	Permiss	Permiss	Permiss
Signal group	0	1	0	0	1	0	0	1	0	0	1	0
Auxiliary Signal Groups												
Lead / Lag	-	-	-	-	-	-	-	-	-	-	-	-

Movement, Approach, & Intersection Results

V/C, Movement V/C Ratio	0.03	0.31	0.31	0.03	0.21	0.21	0.02	0.41	0.41	0.02	0.26	0.26
Intersection LOS	D											
Intersection V/C	0.871											

Intersection Level Of Service Report
Intersection 9: Wilson Ave & Kenwood St

Control Type:	Signalized	Delay (sec / veh):	-
Analysis Method:	ICU 1	Level Of Service:	B
Analysis Period:	15 minutes	Volume to Capacity (v/c):	0.638

Intersection Setup

Name	Kenwood St			Kenwood St			Wilson Ave			Wilson Ave		
Approach	Northbound			Southbound			Eastbound			Westbound		
Lane Configuration												
Turning Movement	Left	Thru	Right	Left	Thru	Right	Left	Thru	Right	Left	Thru	Right
Lane Width [ft]	12.00	12.00	12.00	12.00	12.00	12.00	12.00	12.00	12.00	12.00	12.00	12.00
No. of Lanes in Pocket	0	0	0	0	0	0	0	0	0	0	0	0
Pocket Length [ft]	100.00	100.00	100.00	100.00	100.00	100.00	100.00	100.00	100.00	100.00	100.00	100.00
Speed [mph]	30.00			30.00			30.00			30.00		
Grade [%]	0.00			0.00			0.00			0.00		
Crosswalk	Yes			Yes			Yes			Yes		

Volumes

Name	Kenwood St			Kenwood St			Wilson Ave			Wilson Ave		
Base Volume Input [veh/h]	17	87	34	21	57	13	44	510	58	24	338	27
Base Volume Adjustment Factor	1.0000	1.0000	1.0000	1.0000	1.0000	1.0000	1.0000	1.0000	1.0000	1.0000	1.0000	1.0000
Heavy Vehicles Percentage [%]	2.00	2.00	2.00	2.00	2.00	2.00	2.00	2.00	2.00	2.00	2.00	2.00
Growth Rate	1.04	1.04	1.04	1.04	1.04	1.04	1.04	1.04	1.04	1.04	1.04	1.04
In-Process Volume [veh/h]	4	0	3	0	0	0	0	6	9	4	14	0
Site-Generated Trips [veh/h]	0	0	0	0	0	0	0	9	0	0	-4	0
Diverted Trips [veh/h]	0	0	0	0	0	0	0	0	0	0	0	0
Pass-by Trips [veh/h]	0	0	0	0	0	0	0	0	0	0	0	0
Existing Site Adjustment Volume [veh/h]	0	0	0	0	0	0	0	0	0	0	0	0
Other Volume [veh/h]	0	0	0	0	0	0	0	0	0	0	0	0
Total Hourly Volume [veh/h]	22	90	38	22	59	14	46	545	69	29	362	28
Peak Hour Factor	1.0000	1.0000	1.0000	1.0000	1.0000	1.0000	1.0000	1.0000	1.0000	1.0000	1.0000	1.0000
Other Adjustment Factor	1.0000	1.0000	1.0000	1.0000	1.0000	1.0000	1.0000	1.0000	1.0000	1.0000	1.0000	1.0000
Total 15-Minute Volume [veh/h]	6	23	10	6	15	4	12	136	17	7	91	7
Total Analysis Volume [veh/h]	22	90	38	22	59	14	46	545	69	29	362	28
Pedestrian Volume [ped/h]	0			0			0			0		
Bicycle Volume [bicycles/h]	0			0			0			0		

Intersection Settings

Cycle Length [s]	100
Lost time [s]	10.00

Phasing & Timing

Control Type	Permiss	Permiss	Permiss	Permiss	Permiss	Permiss	Permiss	Permiss	Permiss	Permiss	Permiss	Permiss
Signal group	0	1	0	0	1	0	0	1	0	0	1	0
Auxiliary Signal Groups												
Lead / Lag	-	-	-	-	-	-	-	-	-	-	-	-

Movement, Approach, & Intersection Results

V/C, Movement V/C Ratio	0.01	0.09	0.09	0.01	0.06	0.06	0.03	0.41	0.41	0.02	0.26	0.26
Intersection LOS	B											
Intersection V/C	0.638											

Intersection Level Of Service Report
Intersection 10: Wilson Ave & Jackson St

Control Type:	Signalized	Delay (sec / veh):	-
Analysis Method:	ICU 1	Level Of Service:	C
Analysis Period:	15 minutes	Volume to Capacity (v/c):	0.720

Intersection Setup

Name	Jackson St			Jackson St			Wilson Ave			Wilson Ave		
Approach	Northbound			Southbound			Eastbound			Westbound		
Lane Configuration												
Turning Movement	Left	Thru	Right	Left	Thru	Right	Left	Thru	Right	Left	Thru	Right
Lane Width [ft]	12.00	12.00	12.00	12.00	12.00	12.00	12.00	12.00	12.00	12.00	12.00	12.00
No. of Lanes in Pocket	0	0	0	0	0	0	0	0	0	0	0	0
Pocket Length [ft]	100.00	100.00	100.00	100.00	100.00	100.00	100.00	100.00	100.00	100.00	100.00	100.00
Speed [mph]	30.00			30.00			30.00			30.00		
Grade [%]	0.00			0.00			0.00			0.00		
Crosswalk	Yes			Yes			Yes			Yes		

Volumes

Name	Jackson St			Jackson St			Wilson Ave			Wilson Ave		
Base Volume Input [veh/h]	26	229	59	73	207	28	31	513	32	37	422	86
Base Volume Adjustment Factor	1.0000	1.0000	1.0000	1.0000	1.0000	1.0000	1.0000	1.0000	1.0000	1.0000	1.0000	1.0000
Heavy Vehicles Percentage [%]	2.00	2.00	2.00	2.00	2.00	2.00	2.00	2.00	2.00	2.00	2.00	2.00
Growth Rate	1.04	1.04	1.04	1.04	1.04	1.04	1.04	1.04	1.04	1.04	1.04	1.04
In-Process Volume [veh/h]	0	0	0	0	0	0	0	9	0	0	18	0
Site-Generated Trips [veh/h]	0	7	0	-4	-3	-4	9	0	0	0	0	6
Diverted Trips [veh/h]	0	0	0	0	0	0	0	0	0	0	0	0
Pass-by Trips [veh/h]	0	0	0	0	0	0	0	0	0	0	0	0
Existing Site Adjustment Volume [veh/h]	0	0	0	0	0	0	0	0	0	0	0	0
Other Volume [veh/h]	0	0	0	0	0	0	0	0	0	0	0	0
Total Hourly Volume [veh/h]	27	245	61	72	212	25	41	543	33	38	457	95
Peak Hour Factor	1.0000	1.0000	1.0000	1.0000	1.0000	1.0000	1.0000	1.0000	1.0000	1.0000	1.0000	1.0000
Other Adjustment Factor	1.0000	1.0000	1.0000	1.0000	1.0000	1.0000	1.0000	1.0000	1.0000	1.0000	1.0000	1.0000
Total 15-Minute Volume [veh/h]	7	61	15	18	53	6	10	136	8	10	114	24
Total Analysis Volume [veh/h]	27	245	61	72	212	25	41	543	33	38	457	95
Pedestrian Volume [ped/h]	0			0			0			0		
Bicycle Volume [bicycles/h]	0			0			0			0		

Intersection Settings

Cycle Length [s]	100
Lost time [s]	10.00

Phasing & Timing

Control Type	Permiss	Permiss	Permiss	Permiss	Permiss	Permiss	Permiss	Permiss	Permiss	Permiss	Permiss	Permiss
Signal group	0	1	0	0	1	0	0	1	0	0	1	0
Auxiliary Signal Groups												
Lead / Lag	-	-	-	-	-	-	-	-	-	-	-	-

Movement, Approach, & Intersection Results

V/C, Movement V/C Ratio	0.02	0.19	0.19	0.05	0.15	0.15	0.03	0.36	0.36	0.02	0.35	0.35
Intersection LOS	C											
Intersection V/C	0.720											

Intersection Level Of Service Report
Intersection 11: Wilson Ave & Glendale Ave

Control Type:	Signalized	Delay (sec / veh):	-
Analysis Method:	ICU 1	Level Of Service:	D
Analysis Period:	15 minutes	Volume to Capacity (v/c):	0.811

Intersection Setup

Name							Wilson Ave			Wilson Ave		
Approach	Northbound			Southbound			Eastbound			Westbound		
Lane Configuration												
Turning Movement	Left	Thru	Right	Left	Thru	Right	Left	Thru	Right	Left	Thru	Right
Lane Width [ft]	12.00	12.00	12.00	12.00	12.00	12.00	12.00	12.00	12.00	12.00	12.00	12.00
No. of Lanes in Pocket	0	0	0	0	0	0	0	0	0	0	0	0
Pocket Length [ft]	100.00	100.00	100.00	100.00	100.00	100.00	100.00	100.00	100.00	100.00	100.00	100.00
Speed [mph]	30.00			30.00			30.00			30.00		
Grade [%]	0.00			0.00			0.00			0.00		
Crosswalk	Yes			Yes			Yes			Yes		

Volumes

Name							Wilson Ave			Wilson Ave		
Base Volume Input [veh/h]	93	886	78	167	750	87	204	376	74	56	296	86
Base Volume Adjustment Factor	1.0000	1.0000	1.0000	1.0000	1.0000	1.0000	1.0000	1.0000	1.0000	1.0000	1.0000	1.0000
Heavy Vehicles Percentage [%]	2.00	2.00	2.00	2.00	2.00	2.00	2.00	2.00	2.00	2.00	2.00	2.00
Growth Rate	1.04	1.04	1.04	1.04	1.04	1.04	1.04	1.04	1.04	1.04	1.04	1.04
In-Process Volume [veh/h]	3	12	0	0	8	5	2	6	1	0	10	0
Site-Generated Trips [veh/h]	0	0	0	0	0	1	-1	-3	0	0	5	0
Diverted Trips [veh/h]	0	0	0	0	0	0	0	0	0	0	0	0
Pass-by Trips [veh/h]	0	0	0	0	0	0	0	0	0	0	0	0
Existing Site Adjustment Volume [veh/h]	0	0	0	0	0	0	0	0	0	0	0	0
Other Volume [veh/h]	0	0	0	0	0	0	0	0	0	0	0	0
Total Hourly Volume [veh/h]	100	933	81	174	788	96	213	394	78	58	323	89
Peak Hour Factor	1.0000	1.0000	1.0000	1.0000	1.0000	1.0000	1.0000	1.0000	1.0000	1.0000	1.0000	1.0000
Other Adjustment Factor	1.0000	1.0000	1.0000	1.0000	1.0000	1.0000	1.0000	1.0000	1.0000	1.0000	1.0000	1.0000
Total 15-Minute Volume [veh/h]	25	233	20	44	197	24	53	99	20	15	81	22
Total Analysis Volume [veh/h]	100	933	81	174	788	96	213	394	78	58	323	89
Pedestrian Volume [ped/h]	0			0			0			0		
Bicycle Volume [bicycles/h]	0			0			0			0		

Intersection Settings

Cycle Length [s]	100
Lost time [s]	10.00

Phasing & Timing

Control Type	Protecte	Permiss	Permiss	Protecte	Permiss	Permiss	Protecte	Permiss	Permiss	Protecte	Permiss	Permiss
Signal group	1	1	0	1	1	0	1	1	0	1	1	0
Auxiliary Signal Groups												
Lead / Lag	Lag	-	-	Lag	-	-	Lag	-	-	Lag	-	-

Movement, Approach, & Intersection Results

V/C, Movement V/C Ratio	0.06	0.21	0.21	0.11	0.25	0.06	0.13	0.25	0.05	0.04	0.26	0.26
Intersection LOS	D											
Intersection V/C	0.811											

Intersection Level Of Service Report
Intersection 12: Broadway & Brand Blvd

Control Type:	Signalized	Delay (sec / veh):	-
Analysis Method:	ICU 1	Level Of Service:	C
Analysis Period:	15 minutes	Volume to Capacity (v/c):	0.768

Intersection Setup

Name	Brand Blvd			Brand Blvd			Broadway			Broadway		
Approach	Northbound			Southbound			Eastbound			Westbound		
Lane Configuration												
Turning Movement	Left	Thru	Right	Left	Thru	Right	Left	Thru	Right	Left	Thru	Right
Lane Width [ft]	12.00	12.00	12.00	12.00	12.00	12.00	12.00	12.00	12.00	12.00	12.00	12.00
No. of Lanes in Pocket	0	0	0	0	0	0	0	0	0	0	0	0
Pocket Length [ft]	100.00	100.00	100.00	100.00	100.00	100.00	100.00	100.00	100.00	100.00	100.00	100.00
Speed [mph]	30.00			30.00			30.00			30.00		
Grade [%]	0.00			0.00			0.00			0.00		
Crosswalk	Yes			Yes			Yes			Yes		

Volumes

Name	Brand Blvd			Brand Blvd			Broadway			Broadway		
Base Volume Input [veh/h]	136	555	125	115	609	140	150	604	73	139	429	139
Base Volume Adjustment Factor	1.0000	1.0000	1.0000	1.0000	1.0000	1.0000	1.0000	1.0000	1.0000	1.0000	1.0000	1.0000
Heavy Vehicles Percentage [%]	2.00	2.00	2.00	2.00	2.00	2.00	2.00	2.00	2.00	2.00	2.00	2.00
Growth Rate	1.05	1.05	1.05	1.05	1.05	1.05	1.05	1.05	1.05	1.05	1.05	1.05
In-Process Volume [veh/h]	10	169	21	7	131	4	10	61	7	25	67	3
Site-Generated Trips [veh/h]	0	7	0	0	-3	0	0	3	0	0	-2	0
Diverted Trips [veh/h]	0	0	0	0	0	0	0	0	0	0	0	0
Pass-by Trips [veh/h]	0	0	0	0	0	0	0	0	0	0	0	0
Existing Site Adjustment Volume [veh/h]	0	0	0	0	0	0	0	0	0	0	0	0
Other Volume [veh/h]	0	0	0	0	0	0	0	0	0	0	0	0
Total Hourly Volume [veh/h]	153	759	152	128	767	151	168	698	84	171	515	149
Peak Hour Factor	1.0000	1.0000	1.0000	1.0000	1.0000	1.0000	1.0000	1.0000	1.0000	1.0000	1.0000	1.0000
Other Adjustment Factor	1.0000	1.0000	1.0000	1.0000	1.0000	1.0000	1.0000	1.0000	1.0000	1.0000	1.0000	1.0000
Total 15-Minute Volume [veh/h]	38	190	38	32	192	38	42	175	21	43	129	37
Total Analysis Volume [veh/h]	153	759	152	128	767	151	168	698	84	171	515	149
Pedestrian Volume [ped/h]	0			0			0			0		
Bicycle Volume [bicycles/h]	0			0			0			0		

Intersection Settings

Cycle Length [s]	100
Lost time [s]	10.00

Phasing & Timing

Control Type	Protecte	Permiss	Permiss	Protecte	Permiss	Permiss	Protecte	Permiss	Permiss	Protecte	Permiss	Permiss
Signal group	1	1	0	1	1	0	1	1	0	1	1	0
Auxiliary Signal Groups												
Lead / Lag	Lag	-	-	Lag	-	-	Lag	-	-	Lag	-	-

Movement, Approach, & Intersection Results

V/C, Movement V/C Ratio	0.10	0.24	0.10	0.08	0.19	0.19	0.11	0.24	0.24	0.11	0.21	0.21
Intersection LOS	C											
Intersection V/C	0.768											

Intersection Level Of Service Report
Intersection 13: Broadway & Maryland Ave

Control Type:	Signalized	Delay (sec / veh):	-
Analysis Method:	ICU 1	Level Of Service:	A
Analysis Period:	15 minutes	Volume to Capacity (v/c):	0.537

Intersection Setup

Name	Maryland Ave			Maryland Ave			Broadway			Broadway		
Approach	Northbound			Southbound			Eastbound			Westbound		
Lane Configuration												
Turning Movement	Left	Thru	Right	Left	Thru	Right	Left	Thru	Right	Left	Thru	Right
Lane Width [ft]	12.00	12.00	12.00	12.00	12.00	12.00	12.00	12.00	12.00	12.00	12.00	12.00
No. of Lanes in Pocket	0	0	0	0	0	0	0	0	0	0	0	0
Pocket Length [ft]	100.00	100.00	100.00	100.00	100.00	100.00	100.00	100.00	100.00	100.00	100.00	100.00
Speed [mph]	30.00			30.00			30.00			30.00		
Grade [%]	0.00			0.00			0.00			0.00		
Crosswalk	Yes			Yes			Yes			Yes		

Volumes

Name	Maryland Ave			Maryland Ave			Broadway			Broadway		
Base Volume Input [veh/h]	86	13	76	60	16	59	28	696	100	46	541	25
Base Volume Adjustment Factor	1.0000	1.0000	1.0000	1.0000	1.0000	1.0000	1.0000	1.0000	1.0000	1.0000	1.0000	1.0000
Heavy Vehicles Percentage [%]	2.00	2.00	2.00	2.00	2.00	2.00	2.00	2.00	2.00	2.00	2.00	2.00
Growth Rate	1.05	1.05	1.05	1.05	1.05	1.05	1.05	1.05	1.05	1.05	1.05	1.05
In-Process Volume [veh/h]	0	0	0	8	0	4	9	79	0	0	91	17
Site-Generated Trips [veh/h]	0	0	0	0	0	0	0	3	0	0	-2	0
Diverted Trips [veh/h]	0	0	0	0	0	0	0	0	0	0	0	0
Pass-by Trips [veh/h]	0	0	0	0	0	0	0	0	0	0	0	0
Existing Site Adjustment Volume [veh/h]	0	0	0	0	0	0	0	0	0	0	0	0
Other Volume [veh/h]	0	0	0	0	0	0	0	0	0	0	0	0
Total Hourly Volume [veh/h]	90	14	80	71	17	66	38	813	105	48	657	43
Peak Hour Factor	1.0000	1.0000	1.0000	1.0000	1.0000	1.0000	1.0000	1.0000	1.0000	1.0000	1.0000	1.0000
Other Adjustment Factor	1.0000	1.0000	1.0000	1.0000	1.0000	1.0000	1.0000	1.0000	1.0000	1.0000	1.0000	1.0000
Total 15-Minute Volume [veh/h]	23	4	20	18	4	17	10	203	26	12	164	11
Total Analysis Volume [veh/h]	90	14	80	71	17	66	38	813	105	48	657	43
Pedestrian Volume [ped/h]	0			0			0			0		
Bicycle Volume [bicycles/h]	0			0			0			0		

Intersection Settings

Cycle Length [s]	100
Lost time [s]	10.00

Phasing & Timing

Control Type	Permiss	Permiss	Permiss	Permiss	Permiss	Permiss	Permiss	Permiss	Permiss	Permiss	Permiss	Permiss
Signal group	0	1	0	0	1	0	0	1	0	0	1	0
Auxiliary Signal Groups												
Lead / Lag	-	-	-	-	-	-	-	-	-	-	-	-

Movement, Approach, & Intersection Results

V/C, Movement V/C Ratio	0.06	0.06	0.06	0.04	0.05	0.05	0.02	0.30	0.30	0.03	0.22	0.22
Intersection LOS	A											
Intersection V/C	0.537											

Intersection Level Of Service Report
Intersection 14: Broadway & Louise St

Control Type:	Signalized	Delay (sec / veh):	-
Analysis Method:	ICU 1	Level Of Service:	B
Analysis Period:	15 minutes	Volume to Capacity (v/c):	0.656

Intersection Setup

Name	Louise St			Louise St			Broadway			Broadway		
Approach	Northbound			Southbound			Eastbound			Westbound		
Lane Configuration												
Turning Movement	Left	Thru	Right	Left	Thru	Right	Left	Thru	Right	Left	Thru	Right
Lane Width [ft]	12.00	12.00	12.00	12.00	12.00	12.00	12.00	12.00	12.00	12.00	12.00	12.00
No. of Lanes in Pocket	0	0	0	0	0	0	0	0	0	0	0	0
Pocket Length [ft]	100.00	100.00	100.00	100.00	100.00	100.00	100.00	100.00	100.00	100.00	100.00	100.00
Speed [mph]	30.00			30.00			30.00			30.00		
Grade [%]	0.00			0.00			0.00			0.00		
Crosswalk	Yes			Yes			Yes			Yes		

Volumes

Name	Louise St			Louise St			Broadway			Broadway		
Base Volume Input [veh/h]	32	259	46	40	261	40	65	691	42	18	554	85
Base Volume Adjustment Factor	1.0000	1.0000	1.0000	1.0000	1.0000	1.0000	1.0000	1.0000	1.0000	1.0000	1.0000	1.0000
Heavy Vehicles Percentage [%]	2.00	2.00	2.00	2.00	2.00	2.00	2.00	2.00	2.00	2.00	2.00	2.00
Growth Rate	1.04	1.04	1.04	1.04	1.04	1.04	1.04	1.04	1.04	1.04	1.04	1.04
In-Process Volume [veh/h]	0	1	0	7	3	14	20	67	0	0	90	8
Site-Generated Trips [veh/h]	0	0	0	0	0	0	0	3	0	0	-2	0
Diverted Trips [veh/h]	0	0	0	0	0	0	0	0	0	0	0	0
Pass-by Trips [veh/h]	0	0	0	0	0	0	0	0	0	0	0	0
Existing Site Adjustment Volume [veh/h]	0	0	0	0	0	0	0	0	0	0	0	0
Other Volume [veh/h]	0	0	0	0	0	0	0	0	0	0	0	0
Total Hourly Volume [veh/h]	33	270	48	49	274	56	88	789	44	19	664	96
Peak Hour Factor	1.0000	1.0000	1.0000	1.0000	1.0000	1.0000	1.0000	1.0000	1.0000	1.0000	1.0000	1.0000
Other Adjustment Factor	1.0000	1.0000	1.0000	1.0000	1.0000	1.0000	1.0000	1.0000	1.0000	1.0000	1.0000	1.0000
Total 15-Minute Volume [veh/h]	8	68	12	12	69	14	22	197	11	5	166	24
Total Analysis Volume [veh/h]	33	270	48	49	274	56	88	789	44	19	664	96
Pedestrian Volume [ped/h]	0			0			0			0		
Bicycle Volume [bicycles/h]	0			0			0			0		

Intersection Settings

Cycle Length [s]	100
Lost time [s]	10.00

Phasing & Timing

Control Type	Permiss	Permiss	Permiss	Permiss	Permiss	Permiss	Permiss	Permiss	Permiss	Permiss	Permiss	Permiss
Signal group	0	1	0	0	1	0	0	1	0	0	1	0
Auxiliary Signal Groups												
Lead / Lag	-	-	-	-	-	-	-	-	-	-	-	-

Movement, Approach, & Intersection Results

V/C, Movement V/C Ratio	0.02	0.22	0.22	0.03	0.24	0.24	0.06	0.26	0.26	0.01	0.24	0.24
Intersection LOS	B											
Intersection V/C	0.656											

Intersection Level Of Service Report
Intersection 15: Broadway and Kenwood St

Control Type:	Signalized	Delay (sec / veh):	-
Analysis Method:	ICU 1	Level Of Service:	A
Analysis Period:	15 minutes	Volume to Capacity (v/c):	0.468

Intersection Setup

Name	Kenwood St			Kenwood St			Broadway			Broadway		
Approach	Northbound			Southbound			Eastbound			Westbound		
Lane Configuration												
Turning Movement	Left	Thru	Right	Left	Thru	Right	Left	Thru	Right	Left	Thru	Right
Lane Width [ft]	12.00	12.00	12.00	12.00	12.00	12.00	12.00	12.00	12.00	12.00	12.00	12.00
No. of Lanes in Pocket	0	0	0	0	0	0	0	0	0	0	0	0
Pocket Length [ft]	100.00	100.00	100.00	100.00	100.00	100.00	100.00	100.00	100.00	100.00	100.00	100.00
Speed [mph]	30.00			30.00			30.00			30.00		
Grade [%]	0.00			0.00			0.00			0.00		
Crosswalk	Yes			Yes			Yes			Yes		

Volumes

Name	Kenwood St			Kenwood St			Broadway			Broadway		
Base Volume Input [veh/h]	23	69	26	25	41	48	40	660	18	13	530	32
Base Volume Adjustment Factor	1.0000	1.0000	1.0000	1.0000	1.0000	1.0000	1.0000	1.0000	1.0000	1.0000	1.0000	1.0000
Heavy Vehicles Percentage [%]	2.00	2.00	2.00	2.00	2.00	2.00	2.00	2.00	2.00	2.00	2.00	2.00
Growth Rate	1.04	1.04	1.04	1.04	1.04	1.04	1.04	1.04	1.04	1.04	1.04	1.04
In-Process Volume [veh/h]	4	0	2	4	0	4	9	60	5	4	90	5
Site-Generated Trips [veh/h]	0	0	0	0	0	0	0	3	0	0	-2	0
Diverted Trips [veh/h]	0	0	0	0	0	0	0	0	0	0	0	0
Pass-by Trips [veh/h]	0	0	0	0	0	0	0	0	0	0	0	0
Existing Site Adjustment Volume [veh/h]	0	0	0	0	0	0	0	0	0	0	0	0
Other Volume [veh/h]	0	0	0	0	0	0	0	0	0	0	0	0
Total Hourly Volume [veh/h]	28	72	29	30	43	54	51	749	24	18	639	38
Peak Hour Factor	1.0000	1.0000	1.0000	1.0000	1.0000	1.0000	1.0000	1.0000	1.0000	1.0000	1.0000	1.0000
Other Adjustment Factor	1.0000	1.0000	1.0000	1.0000	1.0000	1.0000	1.0000	1.0000	1.0000	1.0000	1.0000	1.0000
Total 15-Minute Volume [veh/h]	7	18	7	8	11	14	13	187	6	5	160	10
Total Analysis Volume [veh/h]	28	72	29	30	43	54	51	749	24	18	639	38
Pedestrian Volume [ped/h]	0			0			0			0		
Bicycle Volume [bicycles/h]	0			0			0			0		

Intersection Settings

Cycle Length [s]	100
Lost time [s]	10.00

Phasing & Timing

Control Type	Permiss	Permiss	Permiss	Permiss	Permiss	Permiss	Permiss	Permiss	Permiss	Permiss	Permiss	Permiss
Signal group	0	1	0	0	1	0	0	1	0	0	1	0
Auxiliary Signal Groups												
Lead / Lag	-	-	-	-	-	-	-	-	-	-	-	-

Movement, Approach, & Intersection Results

V/C, Movement V/C Ratio	0.02	0.08	0.08	0.02	0.08	0.08	0.03	0.26	0.26	0.01	0.22	0.22
Intersection LOS	A											
Intersection V/C	0.468											

Intersection Level Of Service Report
Intersection 16: Broadway & Jackon St

Control Type:	Signalized	Delay (sec / veh):	-
Analysis Method:	ICU 1	Level Of Service:	A
Analysis Period:	15 minutes	Volume to Capacity (v/c):	0.558

Intersection Setup

Name	Jackson St			Jackson St			Broadway			Broadway		
Approach	Northbound			Southbound			Eastbound			Westbound		
Lane Configuration												
Turning Movement	Left	Thru	Right	Left	Thru	Right	Left	Thru	Right	Left	Thru	Right
Lane Width [ft]	12.00	12.00	12.00	12.00	12.00	12.00	12.00	12.00	12.00	12.00	12.00	12.00
No. of Lanes in Pocket	0	0	0	0	0	0	0	0	0	0	0	0
Pocket Length [ft]	100.00	100.00	100.00	100.00	100.00	100.00	100.00	100.00	100.00	100.00	100.00	100.00
Speed [mph]	30.00			30.00			30.00			30.00		
Grade [%]	0.00			0.00			0.00			0.00		
Crosswalk	Yes			Yes			Yes			Yes		

Volumes

Name	Jackson St			Jackson St			Broadway			Broadway		
Base Volume Input [veh/h]	26	168	41	65	141	39	36	639	18	24	531	58
Base Volume Adjustment Factor	1.0000	1.0000	1.0000	1.0000	1.0000	1.0000	1.0000	1.0000	1.0000	1.0000	1.0000	1.0000
Heavy Vehicles Percentage [%]	2.00	2.00	2.00	2.00	2.00	2.00	2.00	2.00	2.00	2.00	2.00	2.00
Growth Rate	1.04	1.04	1.04	1.04	1.04	1.04	1.04	1.04	1.04	1.04	1.04	1.04
In-Process Volume [veh/h]	0	0	0	0	0	0	0	66	0	0	99	0
Site-Generated Trips [veh/h]	0	0	0	-1	0	-2	3	0	0	0	0	4
Diverted Trips [veh/h]	0	0	0	0	0	0	0	0	0	0	0	0
Pass-by Trips [veh/h]	0	0	0	0	0	0	0	0	0	0	0	0
Existing Site Adjustment Volume [veh/h]	0	0	0	0	0	0	0	0	0	0	0	0
Other Volume [veh/h]	0	0	0	0	0	0	0	0	0	0	0	0
Total Hourly Volume [veh/h]	27	175	43	67	147	39	40	731	19	25	651	64
Peak Hour Factor	1.0000	1.0000	1.0000	1.0000	1.0000	1.0000	1.0000	1.0000	1.0000	1.0000	1.0000	1.0000
Other Adjustment Factor	1.0000	1.0000	1.0000	1.0000	1.0000	1.0000	1.0000	1.0000	1.0000	1.0000	1.0000	1.0000
Total 15-Minute Volume [veh/h]	7	44	11	17	37	10	10	183	5	6	163	16
Total Analysis Volume [veh/h]	27	175	43	67	147	39	40	731	19	25	651	64
Pedestrian Volume [ped/h]	0			0			0			0		
Bicycle Volume [bicycles/h]	0			0			0			0		

Intersection Settings

Cycle Length [s]	100
Lost time [s]	10.00

Phasing & Timing

Control Type	Permiss	Permiss	Permiss	Permiss	Permiss	Permiss	Permiss	Permiss	Permiss	Permiss	Permiss	Permiss
Signal group	0	1	0	0	1	0	0	1	0	0	1	0
Auxiliary Signal Groups												
Lead / Lag	-	-	-	-	-	-	-	-	-	-	-	-

Movement, Approach, & Intersection Results

V/C, Movement V/C Ratio	0.02	0.15	0.15	0.04	0.12	0.12	0.03	0.25	0.25	0.02	0.23	0.23
Intersection LOS	A											
Intersection V/C	0.558											

APPENDIX C

Explanation of Level of Service Categories

Level of Service (LOS) Descriptions[1]

Level of Service	Description	Volume to Capacity (v/c) Ratio	Control Delay Per Vehicle
A	Level of Service A occurs when progression is extremely favorable and vehicles arrive during the green phase. Most vehicles do not stop at all. Short cycle lengths may also contribute to low delay.	0.600 and below	10 sec and below
B	Level of Service B generally occurs with good progression and/or short cycle lengths. More vehicles stop than for Level of Service A, causing higher levels of delay.	0.601 to 0.700	10 to 20 sec
C	Level of Service C generally result from fair progression and/or longer cycle lengths. Individual cycle failures may begin to appear at this level. The number of vehicles stopping is significant at this level although many still pass through the intersection without stopping.	0.701 to 0.800	20 to 35 sec
D	Level of Service D describes a situation in which the influence of congestion becomes more noticeable. Longer delays may result from some combination of unfavorable progression, long cycle lengths, and/or high traffic volumes as compared to the roadway capacity. Many vehicles are required to stop and the number of vehicle that do not have to stop declines. Individual cycle failures are therefore more noticeable.	0.801 to 0.900	35 to 55 sec
E	Level of Service E is considered to be the limit of acceptable conditions. High delay values generally indicate poor progression, long cycle lengths, and high traffic volumes. Individual cycle failures frequently occur.	0.901 to 1.000	55 to 80 sec
F	Level of Service F is generally considered to be unacceptable to most drivers. This condition often occurs with over-saturation, i.e., when traffic arrives at a flow rate that exceeds the capacity of the intersection.	1.001 and above	80 sec and above

[1] Source: Highway Capacity Manual Special Report 209, Transportation Research Board, National Research Council Washington D.C., 2000.

APPENDIX D

ITE Land Use Details

Land Use: 220
Multifamily Housing (Low-Rise)

Description

Low-rise multifamily housing includes apartments, townhouses, and condominiums located within the same building with at least three other dwelling units and that have one or two levels (floors). Multifamily housing (mid-rise) (Land Use 221), multifamily housing (high-rise) (Land Use 222), and off-campus student apartment (Land Use 225) are related land uses.

Additional Data

In prior editions of *Trip Generation Manual*, the low-rise multifamily housing sites were further divided into rental and condominium categories. An investigation of vehicle trip data found no clear differences in trip making patterns between the rental and condominium sites within the ITE database. As more data are compiled for future editions, this land use classification can be reinvestigated.

For the three sites for which both the number of residents and the number of occupied dwelling units were available, there were an average of 2.72 residents per occupied dwelling unit.

For the two sites for which the numbers of both total dwelling units and occupied dwelling units were available, an average of 96.2 percent of the total dwelling units were occupied.

This land use included data from a wide variety of units with different sizes, price ranges, locations, and ages. Consequently, there was a wide variation in trips generated within this category. Other factors, such as geographic location and type of adjacent and nearby development, may also have had an effect on the site trip generation.

Time-of-day distribution data for this land use are presented in Appendix A. For the 10 general urban/suburban sites with data, the overall highest vehicle volumes during the AM and PM on a weekday were counted between 7:15 and 8:15 a.m. and 4:45 and 5:45 p.m., respectively. For the one site with Saturday data, the overall highest vehicle volume was counted between 9:45 and 10:45 a.m. For the one site with Sunday data, the overall highest vehicle volume was counted between 11:45 a.m. and 12:45 p.m.

For the one dense multi-use urban site with 24-hour count data, the overall highest vehicle volumes during the AM and PM on a weekday were counted between 7:00 and 8:00 a.m. and 6:15 and 7:15 p.m., respectively.

For the three sites for which data were provided for both occupied dwelling units and residents, there was an average of 2.72 residents per occupied dwelling unit.

The average numbers of person trips per vehicle trip at the five general urban/suburban sites at which both person trip and vehicle trip data were collected were as follows:

- 1.13 during Weekday, Peak Hour of Adjacent Street Traffic, one hour between 7 and 9 a.m.
- 1.21 during Weekday, Peak Hour of Adjacent Street Traffic, one hour between 4 and 6 p.m.

The sites were surveyed in the 1980s, the 1990s, the 2000s, and the 2010s in British Columbia (CAN), California, District of Columbia, Florida, Georgia, Illinois, Indiana, Maine, Maryland, Minnesota, New Jersey, New York, Ontario, Oregon, Pennsylvania, South Dakota, Tennessee, Texas, Utah, Virginia, and Washington.

It is expected that the number of bedrooms and number of residents are likely correlated to the number of trips generated by a residential site. Many of the studies included in this land use did not indicate the total number of bedrooms. To assist in the future analysis of this land use, it is important that this information be collected and included in trip generation data submissions.

Source Numbers

168, 187, 188, 204, 211, 300, 305, 306, 319, 320, 321, 357, 390, 412, 418, 525, 530, 571, 579, 583, 864, 868, 869, 870, 896, 903, 918, 946, 947, 948, 951

Multifamily Housing (Low-Rise)
(220)

Vehicle Trip Ends vs: **Dwelling Units**
On a: **Weekday**

Setting/Location: **General Urban/Suburban**
Number of Studies: 29
Avg. Num. of Dwelling Units: 168
Directional Distribution: 50% entering, 50% exiting

Vehicle Trip Generation per Dwelling Unit

Average Rate	Range of Rates	Standard Deviation
7.32	4.45 - 10.97	1.31

Data Plot and Equation

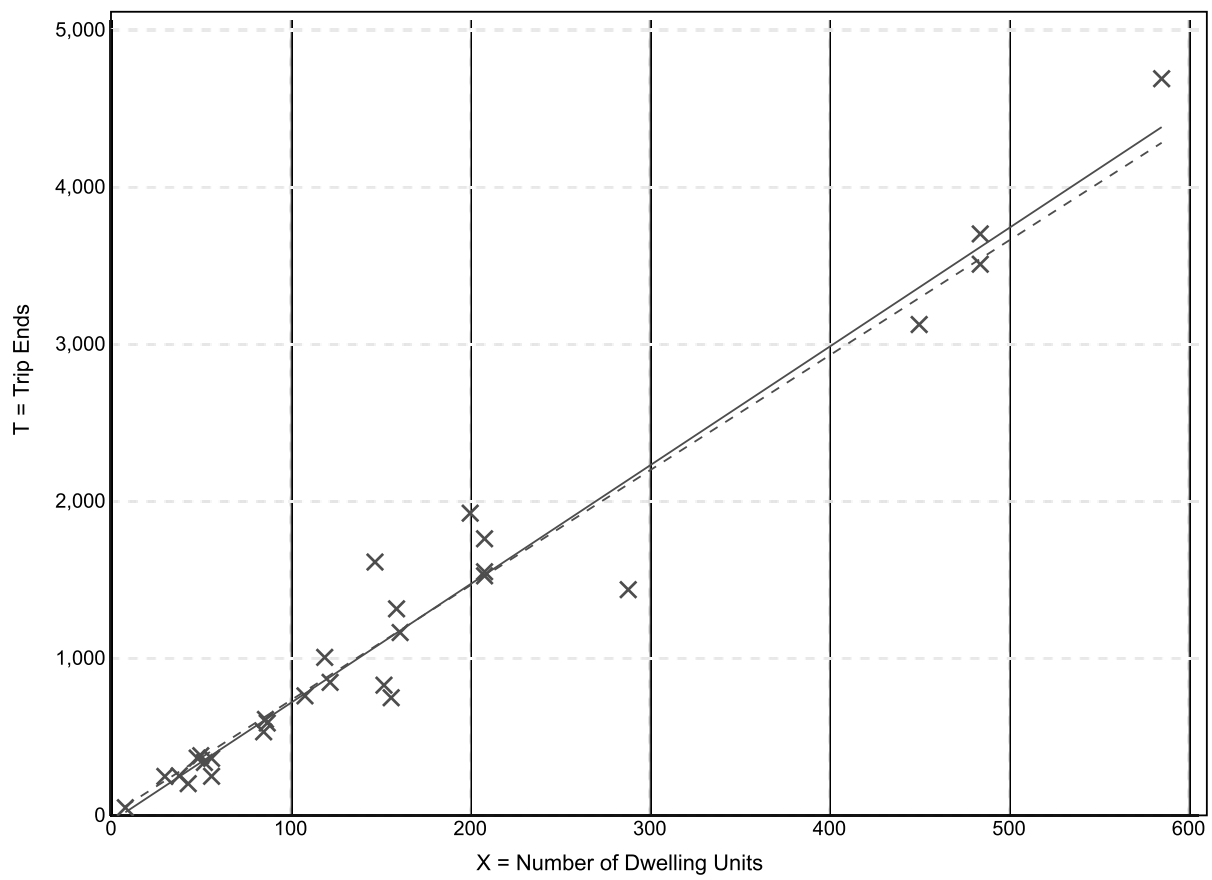

Fitted Curve Equation: T = 7.56(X) - 40.86

R^2= 0.96

Multifamily Housing (Low-Rise)
(220)

Vehicle Trip Ends vs:	**Dwelling Units**
On a:	**Weekday,**
	Peak Hour of Adjacent Street Traffic,
	One Hour Between 7 and 9 a.m.
Setting/Location:	**General Urban/Suburban**
Number of Studies:	42
Avg. Num. of Dwelling Units:	199
Directional Distribution:	23% entering, 77% exiting

Vehicle Trip Generation per Dwelling Unit

Average Rate	Range of Rates	Standard Deviation
0.46	0.18 - 0.74	0.12

Data Plot and Equation

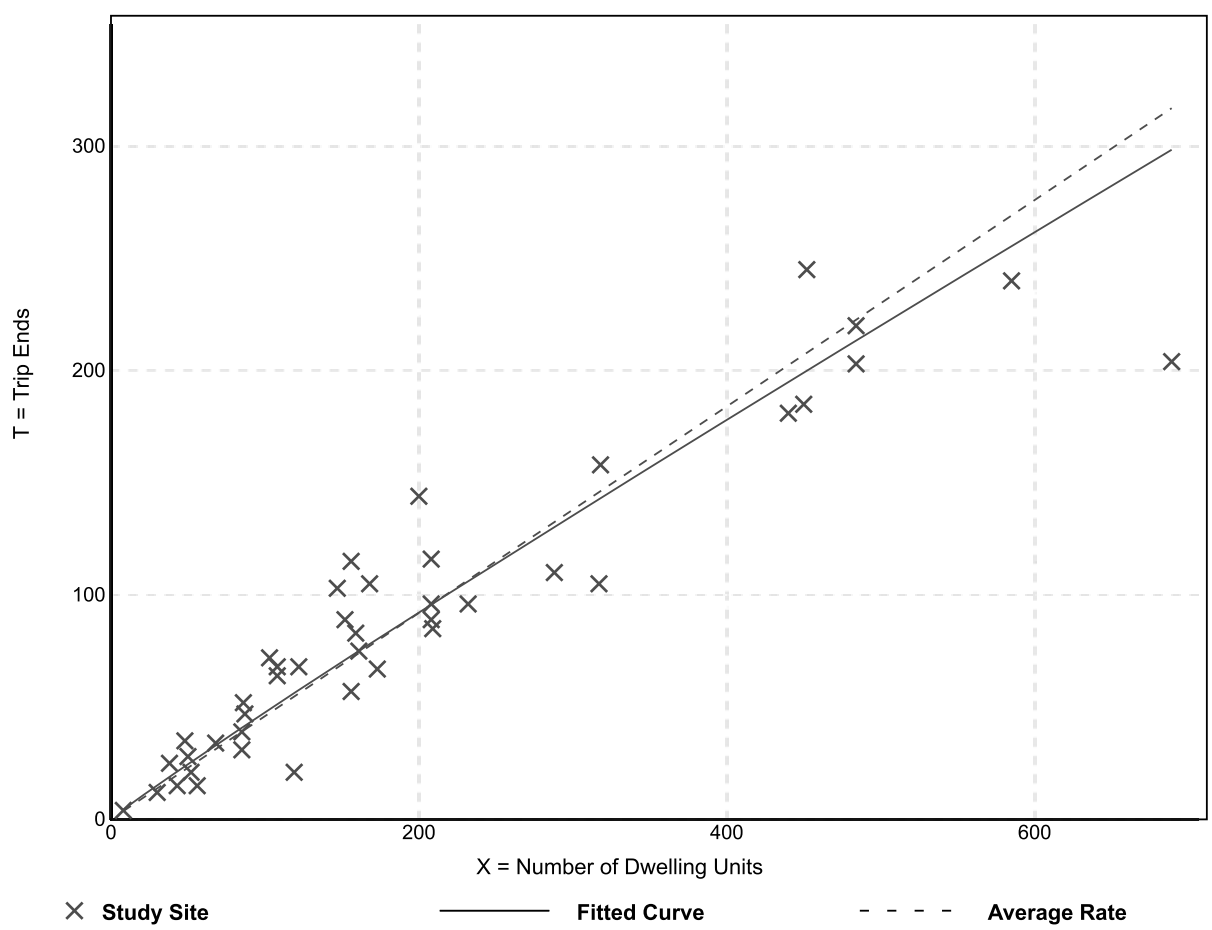

Fitted Curve Equation: Ln(T) = 0.95 Ln(X) - 0.51 **R^2= 0.90**

Multifamily Housing (Low-Rise)
(220)

Vehicle Trip Ends vs:	**Dwelling Units**
On a:	**Weekday,**
	Peak Hour of Adjacent Street Traffic,
	One Hour Between 4 and 6 p.m.
Setting/Location:	**General Urban/Suburban**
Number of Studies:	50
Avg. Num. of Dwelling Units:	187
Directional Distribution:	63% entering, 37% exiting

Vehicle Trip Generation per Dwelling Unit

Average Rate	Range of Rates	Standard Deviation
0.56	0.18 - 1.25	0.16

Data Plot and Equation

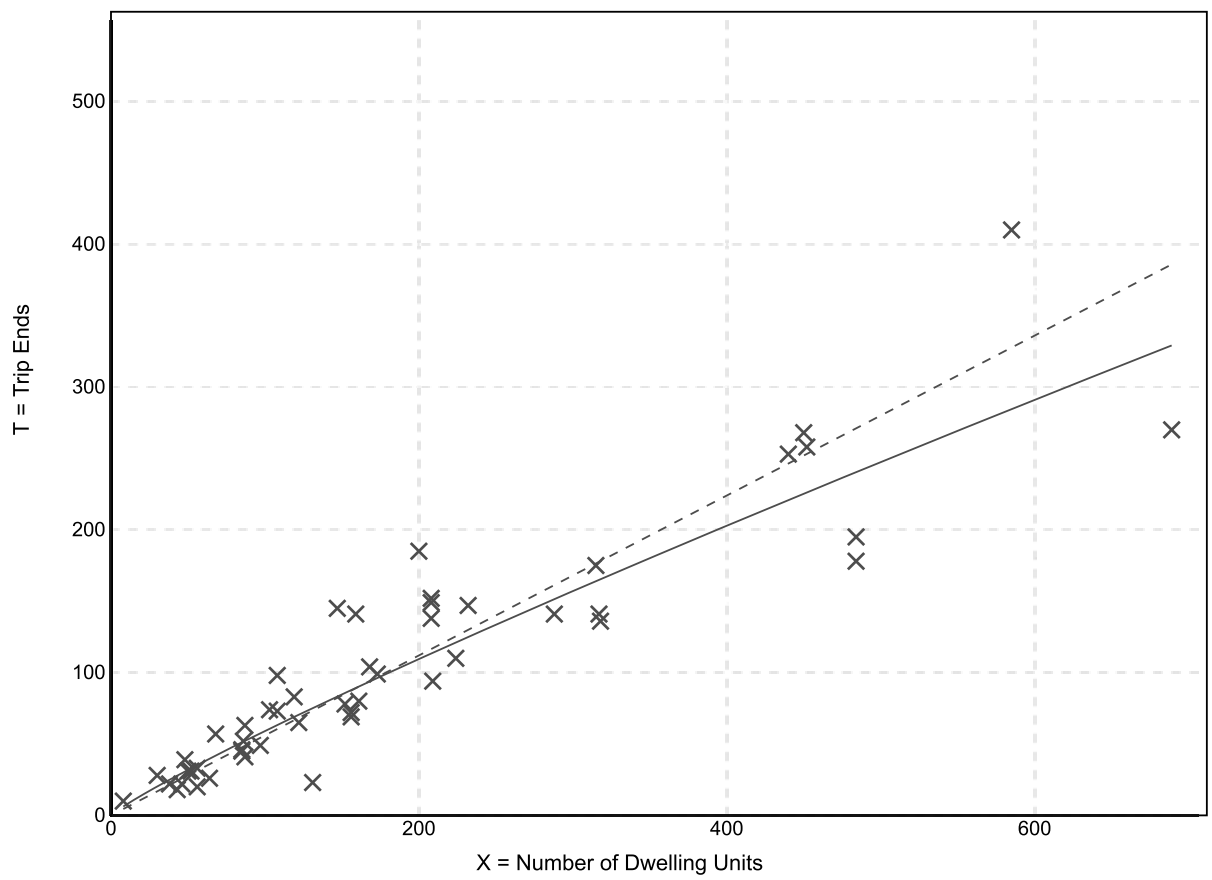

Fitted Curve Equation: Ln(T) = 0.89 Ln(X) - 0.02 **R^2= 0.86**

Land Use: 221
Multifamily Housing (Mid-Rise)

Description

Mid-rise multifamily housing includes apartments, townhouses, and condominiums located within the same building with at least three other dwelling units and that have between three and 10 levels (floors). Multifamily housing (low-rise) (Land Use 220), multifamily housing (high-rise) (Land Use 222), off-campus student apartment (Land Use 225), and mid-rise residential with 1st-floor commercial (Land Use 231) are related land uses.

Additional Data

In prior editions of *Trip Generation Manual*, the mid-rise multifamily housing sites were further divided into rental and condominium categories. An investigation of vehicle trip data found no clear differences in trip making patterns between the rental and condominium sites within the ITE database. As more data are compiled for future editions, this land use classification can be reinvestigated.

For the six sites for which both the number of residents and the number of occupied dwelling units were available, there were an average of 2.46 residents per occupied dwelling unit.

For the five sites for which the numbers of both total dwelling units and occupied dwelling units were available, an average of 95.7 percent of the total dwelling units were occupied.

Time-of-day distribution data for this land use are presented in Appendix A. For the eight general urban/suburban sites with data, the overall highest vehicle volumes during the AM and PM on a weekday were counted between 7:00 and 8:00 a.m. and 4:45 and 5:45 p.m., respectively.

For the four dense multi-use urban sites with 24-hour count data, the overall highest vehicle volumes during the AM and PM on a weekday were counted between 7:15 and 8:15 a.m. and 4:15 and 5:15 p.m., respectively. For the three center city core sites with 24-hour count data, the overall highest vehicle volumes during the AM and PM on a weekday were counted between 6:45 and 7:45 a.m. and 5:00 and 6:00 p.m., respectively.

For the six sites for which data were provided for both occupied dwelling units and residents, there was an average of 2.46 residents per occupied dwelling unit.

For the five sites for which data were provided for both occupied dwelling units and total dwelling units, an average of 95.7 percent of the units were occupied.

The average numbers of person trips per vehicle trip at the five center city core sites at which both person trip and vehicle trip data were collected were as follows:

- 1.84 during Weekday, Peak Hour of Adjacent Street Traffic, one hour between 7 and 9 a.m.
- 1.94 during Weekday, AM Peak Hour of Generator
- 2.07 during Weekday, Peak Hour of Adjacent Street Traffic, one hour between 4 and 6 p.m.
- 2.59 during Weekday, PM Peak Hour of Generator

The average numbers of person trips per vehicle trip at the 32 dense multi-use urban sites at which both person trip and vehicle trip data were collected were as follows:

- 1.90 during Weekday, Peak Hour of Adjacent Street Traffic, one hour between 7 and 9 a.m.
- 1.90 during Weekday, AM Peak Hour of Generator
- 2.00 during Weekday, Peak Hour of Adjacent Street Traffic, one hour between 4 and 6 p.m.
- 2.08 during Weekday, PM Peak Hour of Generator

The average numbers of person trips per vehicle trip at the 13 general urban/suburban sites at which both person trip and vehicle trip data were collected were as follows:

- 1.56 during Weekday, Peak Hour of Adjacent Street Traffic, one hour between 7 and 9 a.m.
- 1.88 during Weekday, AM Peak Hour of Generator
- 1.70 during Weekday, Peak Hour of Adjacent Street Traffic, one hour between 4 and 6 p.m.
- 2.07 during Weekday, PM Peak Hour of Generator

The sites were surveyed in the 1980s, the 1990s, the 2000s, and the 2010s in Alberta (CAN), British Columbia (CAN), California, Delaware, District of Columbia, Florida, Georgia, Illinois, Maryland, Massachusetts, Minnesota, New Hampshire, New Jersey, Ontario, Oregon, Pennsylvania, South Carolina, South Dakota, Tennessee, Utah, Virginia, and Wisconsin.

Source Numbers

168, 188, 204, 305, 306, 321, 357, 390, 436, 525, 530, 579, 638, 818, 857, 866, 901, 904, 910, 912, 918, 934, 936, 939, 944, 947, 948, 949, 959, 963, 964, 966, 967, 969, 970

Multifamily Housing (Mid-Rise)
(221)

Vehicle Trip Ends vs: **Dwelling Units**
On a: **Weekday**

Setting/Location: **General Urban/Suburban**
Number of Studies: 27
Avg. Num. of Dwelling Units: 205
Directional Distribution: 50% entering, 50% exiting

Vehicle Trip Generation per Dwelling Unit

Average Rate	Range of Rates	Standard Deviation
5.44	1.27 - 12.50	2.03

Data Plot and Equation

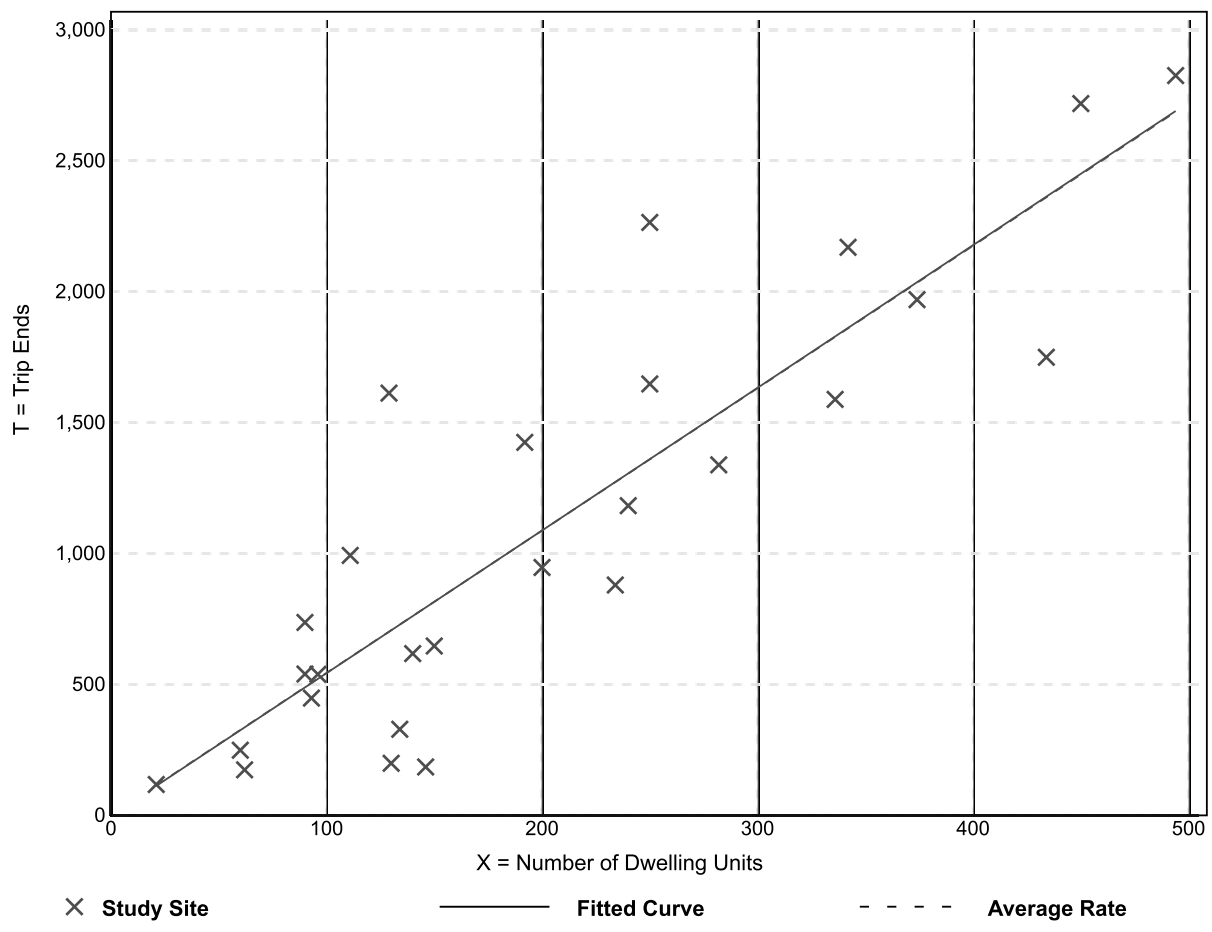

Fitted Curve Equation: T = 5.45(X) - 1.75 **R^2= 0.77**

Multifamily Housing (Mid-Rise)
(221)

Vehicle Trip Ends vs:	**Dwelling Units**
On a:	**Weekday,**
	Peak Hour of Adjacent Street Traffic,
	One Hour Between 7 and 9 a.m.
Setting/Location:	**General Urban/Suburban**
Number of Studies:	53
Avg. Num. of Dwelling Units:	207
Directional Distribution:	26% entering, 74% exiting

Vehicle Trip Generation per Dwelling Unit

Average Rate	Range of Rates	Standard Deviation
0.36	0.06 - 1.61	0.19

Data Plot and Equation

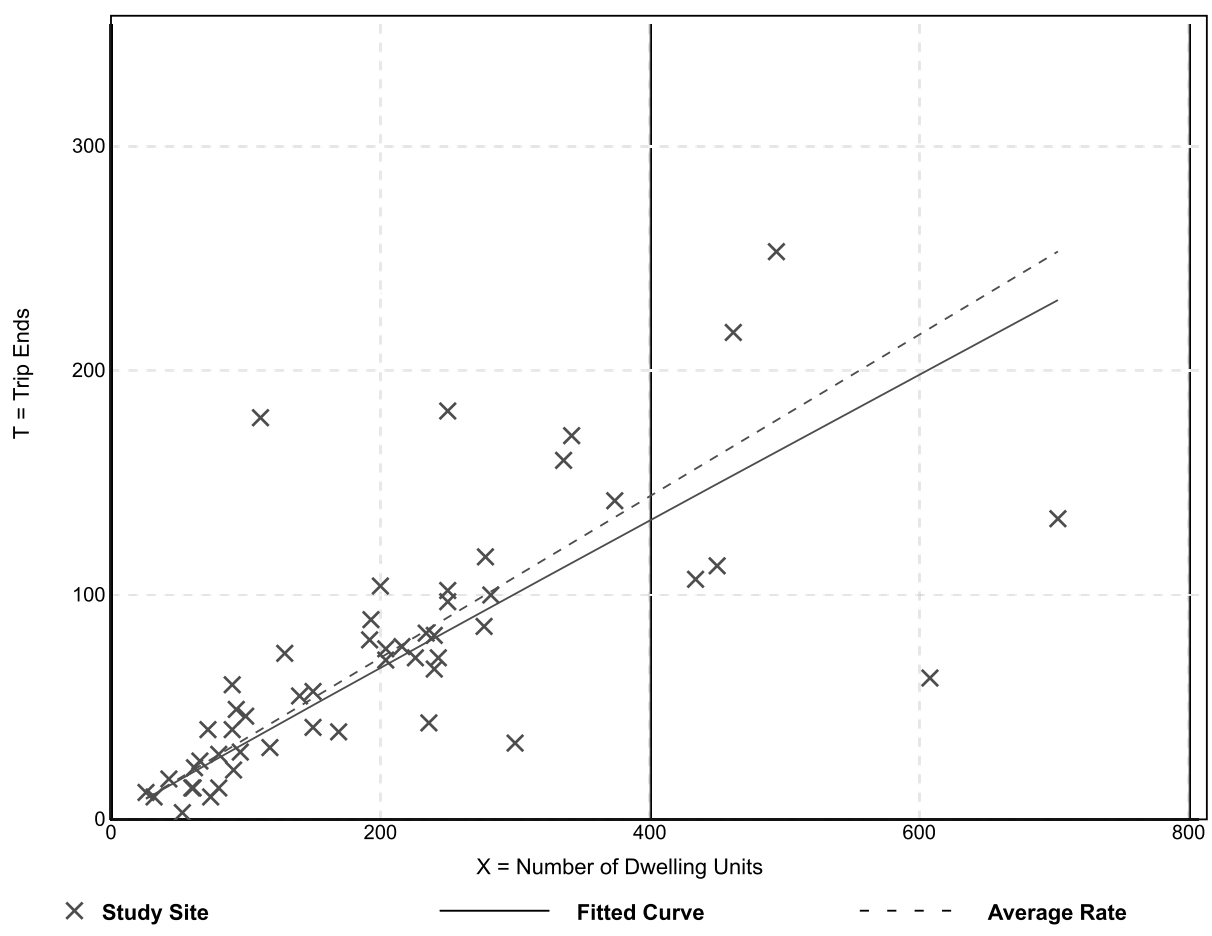

Fitted Curve Equation: Ln(T) = 0.98 Ln(X) - 0.98 **R^2= 0.67**

Multifamily Housing (Mid-Rise)
(221)

Vehicle Trip Ends vs:	**Dwelling Units**
On a:	**Weekday,**
	Peak Hour of Adjacent Street Traffic,
	One Hour Between 4 and 6 p.m.
Setting/Location:	**General Urban/Suburban**
Number of Studies:	60
Avg. Num. of Dwelling Units:	208
Directional Distribution:	61% entering, 39% exiting

Vehicle Trip Generation per Dwelling Unit

Average Rate	Range of Rates	Standard Deviation
0.44	0.15 - 1.11	0.19

Data Plot and Equation

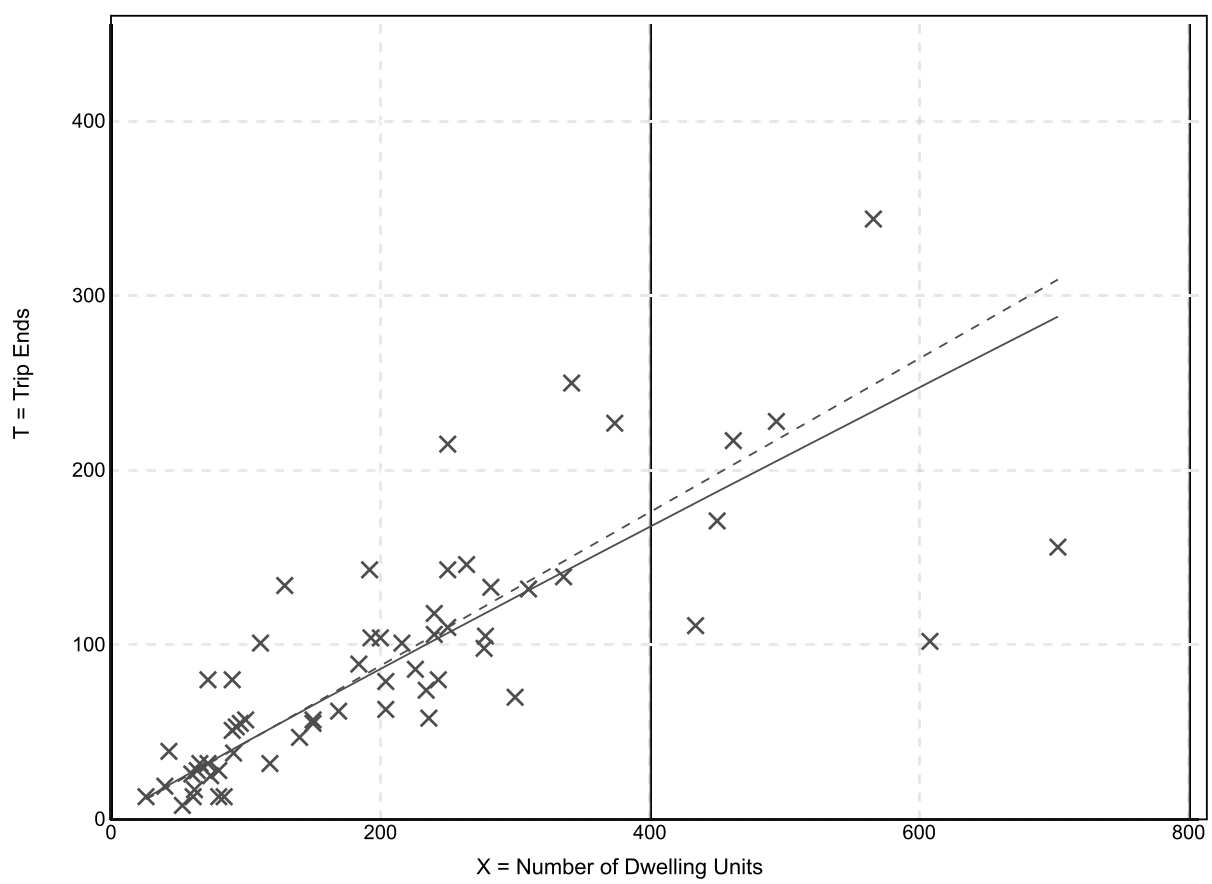

Fitted Curve Equation: Ln(T) = 0.96 Ln(X) - 0.63 **R^2= 0.72**

Land Use: 538
School District Office

Description

A school district office is an administrative office building that provides services and support to parents, students, and the community. School district offices typically offer centralized services for multiple schools in a district including staff training, purchasing, technology services, strategic planning, public information, student transportation, and student assessments.

Additional Data

Time-of-day distribution data for this land use are presented in Appendix A. For the 12 general urban/suburban sites with data, the overall highest vehicle volumes during the AM and PM on a weekday were counted between 7:30 and 8:30 a.m. and 3:45 and 4:45 p.m., respectively.

The sites were surveyed in the 2010s in Texas.

Source Number

889

School District Office
(538)

Vehicle Trip Ends vs: 1000 Sq. Ft. GFA
On a: Weekday

Setting/Location: General Urban/Suburban
Number of Studies: 11
1000 Sq. Ft. GFA: 19
Directional Distribution: 50% entering, 50% exiting

Vehicle Trip Generation per 1000 Sq. Ft. GFA

Average Rate	Range of Rates	Standard Deviation
14.37	4.50 - 19.87	4.42

Data Plot and Equation

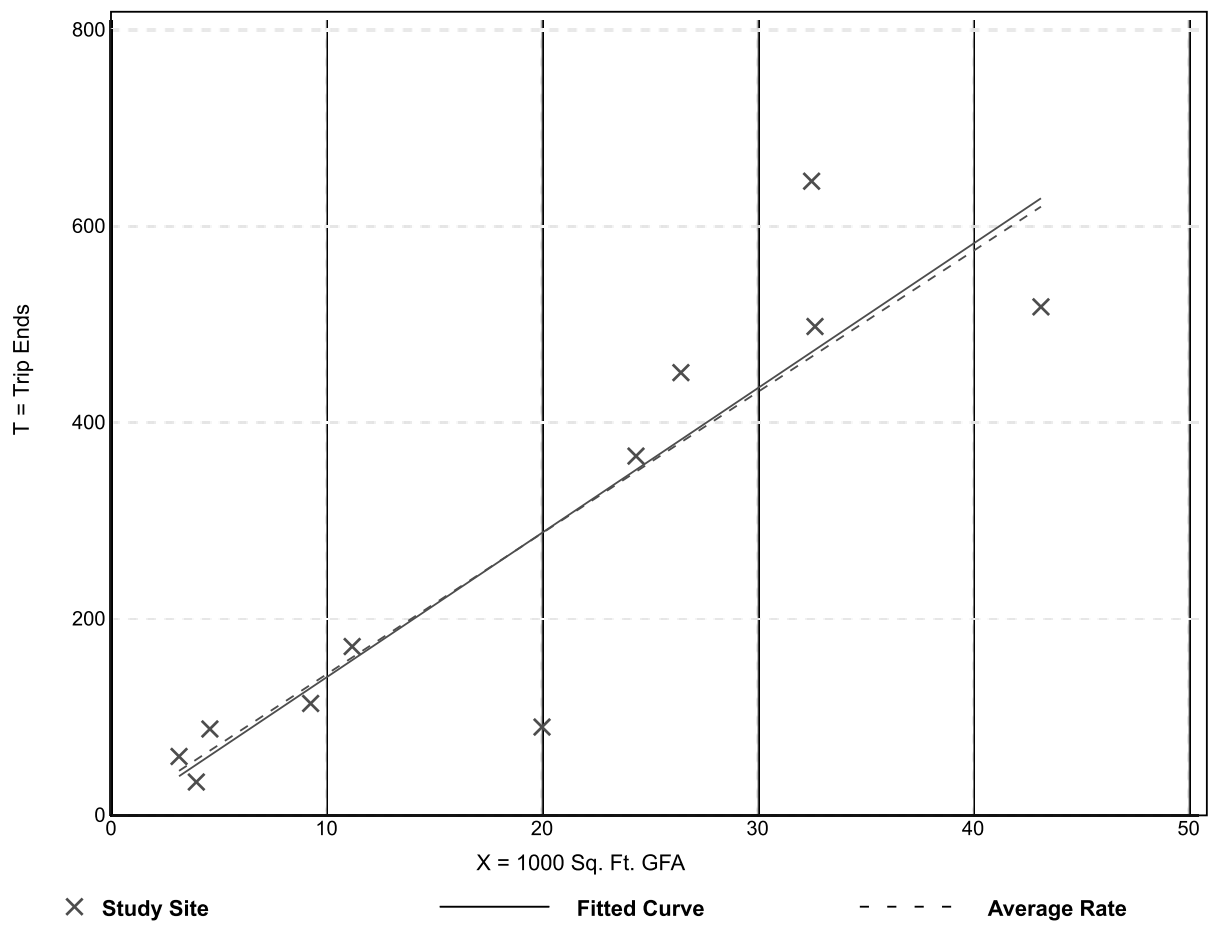

Fitted Curve Equation: T = 14.72(X) - 6.60

R^2= 0.82

School District Office
(538)

Vehicle Trip Ends vs:	**1000 Sq. Ft. GFA**
On a:	**Weekday,**
	Peak Hour of Adjacent Street Traffic,
	One Hour Between 7 and 9 a.m.
Setting/Location:	**General Urban/Suburban**
Number of Studies:	11
1000 Sq. Ft. GFA:	19
Directional Distribution:	76% entering, 24% exiting

Vehicle Trip Generation per 1000 Sq. Ft. GFA

Average Rate	Range of Rates	Standard Deviation
2.36	0.50 - 3.60	0.94

Data Plot and Equation

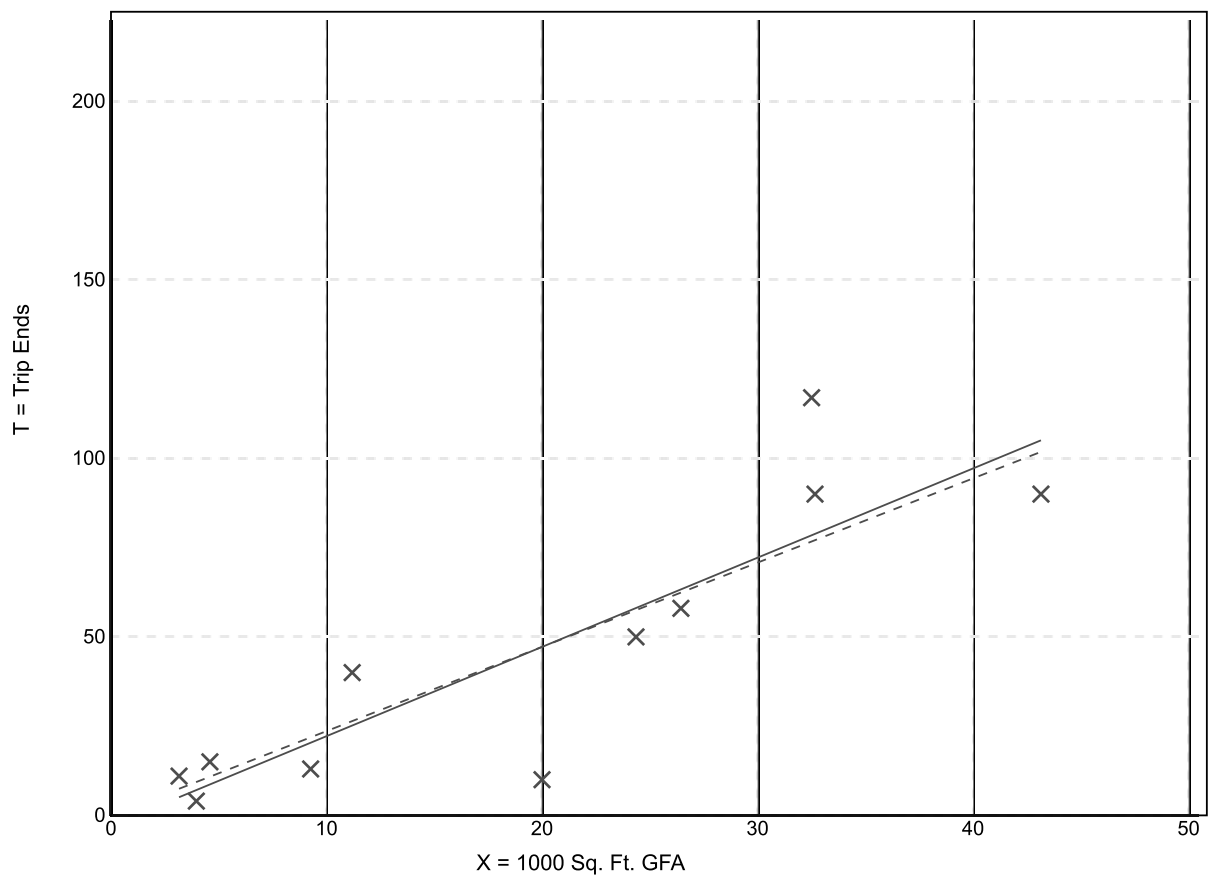

× **Study Site** ——— **Fitted Curve** - - - - **Average Rate**

Fitted Curve Equation: T = 2.50(X) - 2.81 **R^2= 0.76**

School District Office
(538)

Vehicle Trip Ends vs:	**1000 Sq. Ft. GFA**
On a:	**Weekday,**
	Peak Hour of Adjacent Street Traffic,
	One Hour Between 4 and 6 p.m.
Setting/Location:	**General Urban/Suburban**
Number of Studies:	11
1000 Sq. Ft. GFA:	19
Directional Distribution:	17% entering, 83% exiting

Vehicle Trip Generation per 1000 Sq. Ft. GFA

Average Rate	Range of Rates	Standard Deviation
2.04	0.35 - 4.05	1.10

Data Plot and Equation

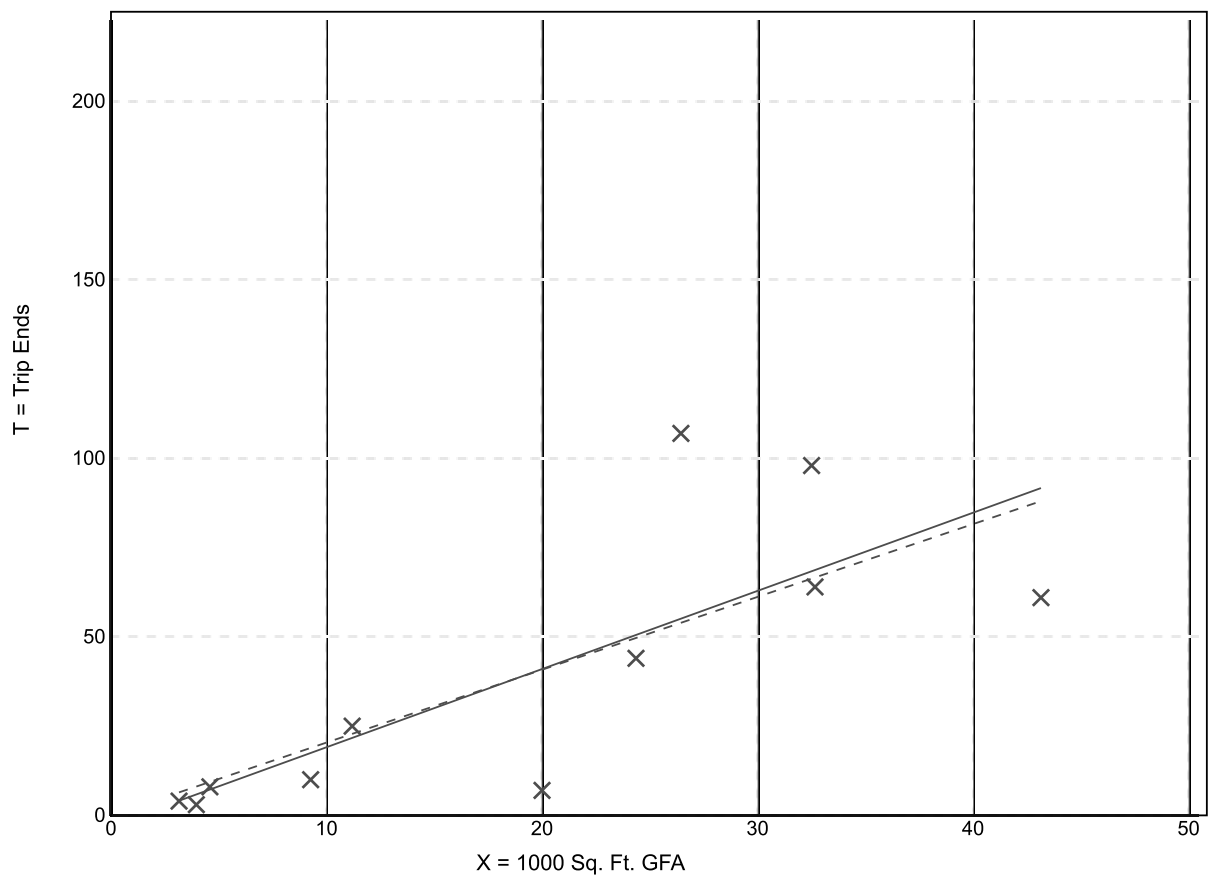

× **Study Site** ——— **Fitted Curve** - - - - **Average Rate**

Fitted Curve Equation: T = 2.19(X) - 2.81 **R^2= 0.61**

APPENDIX E

Mitigated Level of Service Calculations

Intersection Level Of Service Report
Intersection 5: California Ave & Jackson St

Control Type:	Signalized	Delay (sec / veh):	-
Analysis Method:	ICU 1	Level Of Service:	A
Analysis Period:	15 minutes	Volume to Capacity (v/c):	0.583

Intersection Setup

Name	Jackson St			Jackson St			California Ave			California Ave		
Approach	Northbound			Southbound			Eastbound			Westbound		
Lane Configuration												
Turning Movement	Left	Thru	Right	Left	Thru	Right	Left	Thru	Right	Left	Thru	Right
Lane Width [ft]	12.00	12.00	12.00	12.00	12.00	12.00	12.00	12.00	12.00	12.00	12.00	12.00
No. of Lanes in Pocket	0	0	0	0	0	0	0	0	0	0	0	0
Pocket Length [ft]	100.00	100.00	100.00	100.00	100.00	100.00	100.00	100.00	100.00	100.00	100.00	100.00
Speed [mph]	30.00			30.00			30.00			30.00		
Grade [%]	0.00			0.00			0.00			0.00		
Crosswalk	Yes			Yes			Yes			Yes		

Volumes

Name	Jackson St			Jackson St			California Ave			California Ave		
Base Volume Input [veh/h]	21	145	25	48	289	16	10	164	28	47	261	47
Base Volume Adjustment Factor	1.0000	1.0000	1.0000	1.0000	1.0000	1.0000	1.0000	1.0000	1.0000	1.0000	1.0000	1.0000
Heavy Vehicles Percentage [%]	2.00	2.00	2.00	2.00	2.00	2.00	2.00	2.00	2.00	2.00	2.00	2.00
Growth Rate	1.04	1.04	1.04	1.04	1.04	1.04	1.04	1.04	1.04	1.04	1.04	1.04
In-Process Volume [veh/h]	0	0	0	0	0	0	0	21	0	0	5	0
Site-Generated Trips [veh/h]	8	6	2	0	-8	0	0	0	-9	-2	0	0
Diverted Trips [veh/h]	0	0	0	0	0	0	0	0	0	0	0	0
Pass-by Trips [veh/h]	0	0	0	0	0	0	0	0	0	0	0	0
Existing Site Adjustment Volume [veh/h]	0	0	0	0	0	0	0	0	0	0	0	0
Other Volume [veh/h]	0	0	0	0	0	0	0	0	0	0	0	0
Total Hourly Volume [veh/h]	30	157	28	50	293	17	10	192	20	47	276	49
Peak Hour Factor	1.0000	1.0000	1.0000	1.0000	1.0000	1.0000	1.0000	1.0000	1.0000	1.0000	1.0000	1.0000
Other Adjustment Factor	1.0000	1.0000	1.0000	1.0000	1.0000	1.0000	1.0000	1.0000	1.0000	1.0000	1.0000	1.0000
Total 15-Minute Volume [veh/h]	8	39	7	13	73	4	3	48	5	12	69	12
Total Analysis Volume [veh/h]	30	157	28	50	293	17	10	192	20	47	276	49
Pedestrian Volume [ped/h]	0			0			0			0		
Bicycle Volume [bicycles/h]	0			0			0			0		

Intersection Settings

Cycle Length [s]	100
Lost time [s]	10.00

Phasing & Timing

Control Type	Permiss	Permiss	Permiss	Permiss	Permiss	Permiss	Permiss	Permiss	Permiss	Permiss	Permiss	Permiss
Signal group	0	1	0	0	1	0	0	1	0	0	1	0
Auxiliary Signal Groups												
Lead / Lag	-	-	-	-	-	-	-	-	-	-	-	-

Movement, Approach, & Intersection Results

V/C, Movement V/C Ratio	0.02	0.13	0.13	0.03	0.23	0.23	0.01	0.14	0.14	0.03	0.23	0.23
Intersection LOS	A											
Intersection V/C	0.583											

Intersection Level Of Service Report
Intersection 5: California Ave & Jackson St

Control Type:	Signalized	Delay (sec / veh):	-
Analysis Method:	ICU 1	Level Of Service:	B
Analysis Period:	15 minutes	Volume to Capacity (v/c):	0.653

Intersection Setup

Name	Jackson St			Jackson St			California Ave			California Ave		
Approach	Northbound			Southbound			Eastbound			Westbound		
Lane Configuration												
Turning Movement	Left	Thru	Right	Left	Thru	Right	Left	Thru	Right	Left	Thru	Right
Lane Width [ft]	12.00	12.00	12.00	12.00	12.00	12.00	12.00	12.00	12.00	12.00	12.00	12.00
No. of Lanes in Pocket	0	0	0	0	0	0	0	0	0	0	0	0
Pocket Length [ft]	100.00	100.00	100.00	100.00	100.00	100.00	100.00	100.00	100.00	100.00	100.00	100.00
Speed [mph]	30.00			30.00			30.00			30.00		
Grade [%]	0.00			0.00			0.00			0.00		
Crosswalk	Yes			Yes			Yes			Yes		

Volumes

Name	Jackson St			Jackson St			California Ave			California Ave		
Base Volume Input [veh/h]	23	301	58	62	243	15	19	345	15	18	269	62
Base Volume Adjustment Factor	1.0000	1.0000	1.0000	1.0000	1.0000	1.0000	1.0000	1.0000	1.0000	1.0000	1.0000	1.0000
Heavy Vehicles Percentage [%]	2.00	2.00	2.00	2.00	2.00	2.00	2.00	2.00	2.00	2.00	2.00	2.00
Growth Rate	1.04	1.04	1.04	1.04	1.04	1.04	1.04	1.04	1.04	1.04	1.04	1.04
In-Process Volume [veh/h]	0	0	0	0	0	0	0	8	0	0	20	0
Site-Generated Trips [veh/h]	-5	-4	-1	0	9	0	0	0	9	2	0	0
Diverted Trips [veh/h]	0	0	0	0	0	0	0	0	0	0	0	0
Pass-by Trips [veh/h]	0	0	0	0	0	0	0	0	0	0	0	0
Existing Site Adjustment Volume [veh/h]	0	0	0	0	0	0	0	0	0	0	0	0
Other Volume [veh/h]	0	0	0	0	0	0	0	0	0	0	0	0
Total Hourly Volume [veh/h]	19	309	59	64	262	16	20	367	25	21	300	64
Peak Hour Factor	1.0000	1.0000	1.0000	1.0000	1.0000	1.0000	1.0000	1.0000	1.0000	1.0000	1.0000	1.0000
Other Adjustment Factor	1.0000	1.0000	1.0000	1.0000	1.0000	1.0000	1.0000	1.0000	1.0000	1.0000	1.0000	1.0000
Total 15-Minute Volume [veh/h]	5	77	15	16	66	4	5	92	6	5	75	16
Total Analysis Volume [veh/h]	19	309	59	64	262	16	20	367	25	21	300	64
Pedestrian Volume [ped/h]	0			0			0			0		
Bicycle Volume [bicycles/h]	0			0			0			0		

Intersection Settings

Cycle Length [s]	100
Lost time [s]	10.00

Phasing & Timing

Control Type	Permiss	Permiss	Permiss	Permiss	Permiss	Permiss	Permiss	Permiss	Permiss	Permiss	Permiss	Permiss
Signal group	0	1	0	0	1	0	0	1	0	0	1	0
Auxiliary Signal Groups												
Lead / Lag	-	-	-	-	-	-	-	-	-	-	-	-

Movement, Approach, & Intersection Results

V/C, Movement V/C Ratio	0.01	0.24	0.24	0.04	0.21	0.21	0.01	0.26	0.26	0.01	0.24	0.24
Intersection LOS	B											
Intersection V/C	0.653											

APPENDIX F

Traffic Signal Warrant Analysis

Figure 4C-101 (CA). Traffic Signal Warrants Worksheet (Sheet 1 of 5)

COUNT DATE 10/18/17
CALC TA DATE 10/27/17
CHK JB DATE 10/27/17

DIST ____ CO ____ RTE ____ PM ____

Major St: California Ave
Minor St: Jackson St

Critical Approach Speed _____ mph
Critical Approach Speed _____ mph

Speed limit or critical speed on major street traffic > 40 mph..... ☐ or
In built up area of isolated community of < 10,000 population..... ☐ } **RURAL (R)**
☐ **URBAN (U)**

WARRANT 1 - Eight Hour Vehicular Volume **SATISFIED YES ☒ NO ☐**
(Condition A or Condition B or combination of A and B must be satisfied)

Condition A - Minimum Vehicle Volume **100% SATISFIED YES ☒ NO ☐**
80% SATISFIED YES ☒ NO ☐

	MINIMUM REQUIREMENTS (80% SHOWN IN BRACKETS)											
	U	R	U	R								
APPROACH LANES	1		2 or More									
					11:00 AM	12:00 PM	1:00 PM	2:00 PM	3:00 PM	4:00 PM	5:00 PM	6:00 PM
Both Approaches Major Street	500 (400)	350 (280)	600 (480)	420 (336)	531	609	605	587	559	630	667	649
Highest Approach Minor Street	150 (120)	105 (84)	200 (160)	140 (112)	276	293	272	269	300	315	347	288

Hour

Condition B - Interruption of Continuous Traffic **100% SATISFIED YES ☐ NO ☐**
80% SATISFIED YES ☐ NO ☐

	MINIMUM REQUIREMENTS (80% SHOWN IN BRACKETS)											
	U	R	U	R								
APPROACH LANES	1		2 or More									
Both Approaches Major Street	750 (600)	525 (420)	900 (720)	630 (504)								
Highest Approach Minor Street	75 (60)	53 (42)	100 (80)	70 (56)								

Hour

Combination of Conditions A & B **SATISFIED YES ☐ NO ☐**

REQUIREMENT	CONDITION	✓	FULFILLED
TWO CONDITIONS SATISFIED 80%	A. MINIMUM VEHICULAR VOLUME		Yes ☐ No ☐
	AND, B. INTERRUPTION OF CONTINUOUS TRAFFIC		
AND, AN ADEQUATE TRIAL OF OTHER ALTERNATIVES THAT COULD CAUSE LESS DELAY AND INCONVENIENCE TO TRAFFIC HAS FAILED TO SOLVE THE TRAFFIC PROBLEMS			Yes ☐ No ☐

The satisfaction of a traffic signal warrant or warrants shall not in itself require the installation of a traffic control signal.

Figure 4C-101 (CA). Traffic Signal Warrants Worksheet (Sheet 2 of 5)

WARRANT 2 - Four Hour Vehicular Volume **SATISFIED* YES ☒ NO ☐**

Record hourly vehicular volumes for any four hours of an average day.

APPROACH LANES	One	2 or More	12:00 PM	4:00 PM	5:00 PM	6:00 PM / Hour
Both Approaches - Major Street	X		609	630	667	649
Higher Approach - Minor Street	X		293	315	347	288

*All plotted points fall above the applicable curve in Figure 4C-1. (URBAN AREAS)	Yes ☒ No ☐
OR, All plotted points fall above the applicable curve in Figure 4C-2. (RURAL AREAS)	Yes ☐ No ☐

WARRANT 3 - Peak Hour **SATISFIED YES ☐ NO ☐**
(Part A or Part B must be satisfied)

PART A **SATISFIED YES ☐ NO ☐**
(All parts 1, 2, and 3 below must be satisfied for the same one hour, for any four consecutive 15-minute periods)

1. The total delay experienced by traffic on one minor street approach (one direction only) controlled by a STOP sign equals or exceeds four vehicle-hours for a one-lane approach, or five vehicle-hours for a two-lane approach; AND	Yes ☐ No ☐
2. The volume on the same minor street approach (one direction only) equals or exceeds 100 vph for one moving lane of traffic or 150 vph for two moving lanes; AND	Yes ☐ No ☐
3. The total entering volume serviced during the hour equals or exceeds 800 vph for intersections with four or more approaches or 650 vph for intersections with three approaches.	Yes ☐ No ☐

PART B **SATISFIED YES ☐ NO ☐**

APPROACH LANES	One	2 or More	Hour
Both Approaches - Major Street			
Higher Approach - Minor Street			

The plotted point falls above the applicable curve in Figure 4C-3. (URBAN AREAS)	Yes ☐ No ☐
OR, The plotted point falls above the applicable curve in Figure 4C-4. (RURAL AREAS)	Yes ☐ No ☐

The satisfaction of a traffic signal warrant or warrants shall not in itself require the installation of a traffic control signal.