# Appendix E GEOLOGY AND SOILS TECHNICAL REPORTS

## E.1 PHASE I ENVIRONMENTAL SITE ASSESSMENT

# Phase I Environmental Site Assessment
Grayson Power Plant
800 Air Way, Glendale, California 91201

Prepared for:
City of Glendale Water and Power
800 Air Way, Glendale California 91201

Prepared by:
Stantec Consulting Services Inc.
290 Conejo Ridge Avenue
Thousand Oaks, California 91361

Project No.: 2057123300

July 14, 2016

# Sign-off Sheet and Signatures of Environmental Professionals

This document entitled Phase I Environmental Site Assessment, Grayson Power Plant, 800 Air Way, Glendale, California 91201 was prepared by Stantec Consulting Services Inc. (Stantec) for the account of City of Glendale Water and Power. The material in it reflects Stantec's best judgment in light of the information available to it at the time of preparation. Any use which a third party makes of this report, or any reliance on or decisions made based on it, are the responsibilities of such third parties. Stantec accepts no responsibility for damages, if any, suffered by any third party as a result of decisions made or actions based on this report.

All information, conclusions, and recommendations provided by Stantec in this document regarding the Phase I ESA have been prepared under the supervision of and reviewed by the professionals whose signatures appear below.

Author _____
(signature)

**Anuya Sawant, EIT, RMS**
**Project Engineering Specialist**

I declare that, to the best of my professional knowledge and belief, I meet the definition of Environmental Professional as defined in § 312.10 of 40 CFR 312. I have the specific qualifications based on education, training, and experience to assess a property of the nature, history, and setting of the Property. I have developed and performed all the appropriate inquiries in conformance with the standards and practices set forth in 40 CFR Part 312.

Quality Reviewer _____
(signature)

**Scott Edblad, CPESC, CESSWI, QSD/QSP, CAC, LRCST**
**Associate Scientist**

Approved by _____
(signature)

**Steven Brady, C.E.G., C.HG.**
**Senior Principal**

PROFESSIONAL GEOLOGIST
STEVEN C. BRADY
No. 6031
STATE OF CALIFORNIA

## Table of Contents

**ABBREVIATIONS ..... I**
**1.0 SUMMARY ..... 1.1**
**2.0 INTRODUCTION ..... 2.1**
2.1 PROPERTY DESCRIPTION ..... 2.2
2.2 SPECIAL TERMS, CONDITIONS, AND SIGNIFICANT ASSUMPTIONS ..... 2.2
2.3 EXCEPTIONS AND LIMITING CONDITIONS ..... 2.3
2.4 PERSONNEL QUALIFICATIONS ..... 2.4
**3.0 USER-PROVIDED INFORMATION ..... 3.1**
3.1 INFORMATION PROVIDED BY USER ..... 3.1
**4.0 PREVIOUS ENVIRONMENTAL WORK ..... 4.1**
**5.0 RECORDS REVIEW ..... 5.1**
5.1 PHYSICAL SETTING ..... 5.1
5.1.1 Property Topography and Surface Water Flow ..... 5.1
5.1.2 Regional and Property Geology ..... 5.1
5.1.3 Regional and Property Hydrogeology ..... 5.2
5.2 FEDERAL, STATE AND TRIBAL ENVIRONMENTAL RECORDS ..... 5.2
5.2.1 Listings for Property ..... 5.2
5.2.2 Listings for Nearby Sites with Potential to Impact Property ..... 5.7
5.3 LOCAL/REGIONAL ENVIRONMENTAL RECORDS ..... 5.8
5.3.1 California Department of Toxic Substances Control (DTSC) - Chatsworth ..... 5.9
5.3.2 DTSC - Cypress ..... 5.9
5.3.3 County of Los Angeles – Department of Public Works (LA DPW) ..... 5.9
5.3.4 City of Glendale – Building and Planning Department ..... 5.9
5.3.5 Glendale Fire Department ..... 5.9
5.3.6 Regional Water Quality Control Board – Los Angeles (RWQCB-LA) ..... 5.10
5.3.7 Division of Oil, Gas, and Geothermal Resources (DOGGR) ..... 5.10
5.4 HISTORICAL RECORDS REVIEW ..... 5.10
5.4.1 Land Title Records/Deeds ..... 5.10
5.4.2 Aerial Photographs ..... 5.10
5.4.3 City Directories ..... 5.11
5.4.4 Historical Fire Insurance Maps ..... 5.12
5.4.5 Historical Topographic Maps ..... 5.12
5.4.6 Other Historical Sources ..... 5.13
**6.0 SITE RECONNAISSANCE ..... 6.1**
6.1 SITE RECONNAISSANCE METHODOLOGY ..... 6.1
6.2 GENERAL DESCRIPTION ..... 6.1
6.3 HAZARDOUS SUBSTANCES AND PETROLEUM PRODUCTS ..... 6.3
6.4 INTERIOR OBSERVATIONS ..... 6.3
6.5 EXTERIOR OBSERVATIONS ..... 6.4
6.6 UNDERGROUND STORAGE TANKS/STRUCTURES ..... 6.4

6.7 ABOVEGROUND STORAGE TANKS ..... 6.5
6.8 ADJOINING PROPERTIES ..... 6.5
6.8.1 Current Uses of Adjoining Properties ..... 6.5
6.8.2 Observed Evidence of Past Uses of Adjoining Properties ..... 6.5
6.8.3 Pits, Ponds or Lagoons on Adjoining Properties ..... 6.6
6.9 OBSERVED PHYSICAL SETTING ..... 6.6
**7.0 INTERVIEWS ..... 7.1**
**8.0 EVALUATION ..... 8.1**
8.1 FINDINGS AND OPINIONS ..... 8.1
8.2 DATA GAPS ..... 8.2
8.3 CONCLUSIONS ..... 8.2
**9.0 NON-SCOPE CONSIDERATIONS ..... 9.1**
**10.0 REFERENCES ..... 10.1**

## LIST OF FIGURES

Figure 1 Property Location Map
Figure 2 Property Vicinity Map

## LIST OF APPENDICES

APPENDIX A PHOTOGRAPHS OF THE PROPERTY AND VICINITY
APPENDIX B STANTEC RESUMES
APPENDIX C USER PROVIDED RECORDS
APPENDIX D ENVIRONMENTAL AGENCY DATABASE SEARCH REPORT
APPENDIX E HISTORICAL RECORDS
APPENDIX F AGENCY RECORDS
APPENDIX G INTERVIEW FORMS

# Abbreviations

| | |
|---|---|
| AAI | All Appropriate Inquiry |
| ACM | Asbestos containing material |
| AST | Aboveground Storage Tank |
| ASTM | American Society for Testing and Materials |
| BER | Business Environmental Risk |
| CAA | Clean Air Act |
| CERCLA | Comprehensive Environmental Response, Compensation, and Liability Act |
| CFR | Code of Federal Regulation |
| CREC | Controlled Recognized Environmental Conditions |
| CWA | Clean Water Act |
| DTSC | Department of Toxic Substances Control |
| ELUC | Environmental Land Use Control |
| EP | Environmental Professional |
| EPA | Environmental Protection Agency |
| ESA | Environmental Site Assessment |
| FEMA | Federal Emergency Management Agency |
| ft bgs | Feet below ground surface |
| ft msl | Feet above mean sea level |
| HREC | Historical Recognized Environmental Conditions |
| HWMU | Hazardous Waste Management Unit |
| LBP | Lead-based Paint |
| LUST | Leaking Underground Storage Tank |
| MCL | Maximum Contaminant Level |
| MW | Megawatt |
| µg/L | Micrograms per liter |
| mg/kg | Milligrams per kilogram |
| NESHAP | National Emissions Standard for Hazardous Air Pollutants |
| PCBs | Polychlorinated Biphenyls |
| PAHs | Polycyclic Aromatic Hydrocarbons |
| PCE | Tetrachloroethylene |
| RCRA | Resource Conservation and Recovery Act |
| REC | Recognized Environmental Condition |
| RWQCB-LA | Regional Water Quality Control Board – Los Angeles Region |
| SWMU | Solid Waste Management Unit |
| TCE | Trichloroethylene |
| TSCA | Toxic Substance Control Act |
| USDA | United States Department of Agriculture |

| | |
|---|---|
| USGS | United States Geological Survey |
| UST | Underground Storage Tank |
| VEC | Vapor Encroachment Condition |
| VOCs | Volatile Organic Compounds |

# 1.0 SUMMARY

Stantec has completed a Phase I Environmental Site Assessment (ESA) report of the property located at 800 Air Way, Glendale, California 91201 (the "Property"), on behalf of City of Glendale Water and Power (the "Client"). The work was performed according to Stantec's proposal and terms and conditions dated September 17, 2015 and accepted by Client on October 1, 2015. City of Glendale Water and Power (the "User") has been designated as the User of this report.

The Phase I ESA was conducted in conformance with the requirements of American Society for Testing and Materials (ASTM) Designation E 1527-13, except as may have been modified by the scope of work, and terms and conditions, requested by the Client. Any exceptions to, or deletions from, the ASTM practice are described in Sections 2.3 and 8.2.

As part of a proposed repowering project, the City of Glendale, Department of Water and Power plans to demolish the Grayson Power Plant Boiler Building; replace cooling towers 1 through 5 to more efficient models; and replace the generation units between Cooling Tower 1 and 2, designated as Unit 8A, 8B, and 8C. A majority of the buildings located at the Grayson Power Plant, with the exception of Unit 9, a simple cycle peaking plant built in 2003, were completed in or before 1977 and have reached their useful life and need to be replaced with more reliable, efficient, and cleaner units. The repowering of the plant is necessary to meet current and future load as well as supporting the renewable power generation that the City of Glendale is either building or buying. The City of Glendale Department of Water and Power is proposing to replace all the existing generation facilities and their related infrastructure, with the exception of Unit 9, by removing all existing above ground and underground equipment and facilities and building new generation facilities.

The Property consists of approximately 12.40 acres and reportedly operated as a power plant since 1934, prior to which it was reportedly vacant and undeveloped land. Surrounding properties are a mix of commercial and industrial properties. The Property is also reportedly identified as 5750 San Fernando Road and 634 Bekins Way.

The following items of note were identified during this ESA:

- The Property reportedly operated as an electric power plant since 1934;
- A Reverse Osmosis Unit to purify water to be used in the boiler system was observed on the Property during the site reconnaissance. Two sumps are located adjacent to the unit;
- Six air compressors were present on the Property; and
- An aboveground ammonia tank (quantity unknown) and a 1500-gallon sodium hypochlorite tank were also observed on the Property for purification of reclaimed water.

We have performed a Phase I Environmental Site Assessment in conformance with the scope and limitations of ASTM Practice E1527 of the Property. Any exceptions to, or deletions from, this practice are described in Sections 2.3 and 8.2 of this report. This assessment has revealed the following recognized environmental conditions (RECs) in connection with the Property:

SUMMARY
July 14, 2016

- Historical and current presence of three chemical storage areas which stored numerous petroleum hydrocarbons and hazardous chemicals in varying quantities;
- Existence of five cooling towers on the Property since the 1940's;
- Presence of six boilers on the Property;
- Presence of numerous 55-gallon drums and barrels containing lube oil storage in the basement of the Boiler room building. Lube oil for pumps, turbines and air compressors; and synthetic jet engine oil was observed. Most drums were stored on secondary containment which was placed on concrete floor. No spills/leaks were observed;
- Presence of at least seven fuel oil underground storage tanks (USTs) on the Property;
- Presence of former fuel oil and chemical containing aboveground storage tanks (ASTs);
- Historical and current storage of polychlorinated biphenyl (PCB) containing pad and pole mounted transformers on the Property;
- Historical use of a nearby property (1310 Air Way) as an airport; and
- Historical use of adjacent properties as gas stations.

The preceding summary is intended for informational purposes only. Reading of the full body of this report is recommended.

# 2.0 INTRODUCTION

The objective of this Phase I ESA was to perform appropriate inquiry into the past ownership and uses of the Property consistent with good commercial or customary practice as outlined by the ASTM in "Standard Practice for Environmental Site Assessments: Phase I Environmental Site Assessment Process", Designation E1527-13. The purpose of this Phase I ESA was to identify, to the extent feasible, adverse environmental conditions including recognized environmental conditions ("RECs") of the Property.

The ASTM E1527-13 standard indicates that the purpose of the Phase I ESA is to identify RECs, including historical recognized environmental conditions ("HRECs"), and controlled recognized environmental conditions ("CRECs") that may exist at a property. The term "recognized environmental conditions" means the presence or likely presence of any hazardous substances or petroleum products in, on, or at a property:

(1) Due to any release to the environment;

(2) Under conditions indicative of a release to the environment; or

(3) Under conditions that pose a material threat of a future release to the environment.

ASTM defines a "HREC" as a REC that has occurred in connection with the property, but has been addressed to the satisfaction of the applicable regulatory authority and meets unrestricted use criteria established by a regulatory authority, without subjecting the property to any required controls (for example, property use restrictions, activity and use limitations, institutional controls, or engineering controls). Before calling the past release a HREC, the environmental professional must determine whether the past release is a REC when the current Phase I ESA is conducted (for example, if there has been a change in the regulations). If the EP considers the past release to be a REC at the time the Phase I ESA is conducted, the condition shall be included in the conclusions section of the report as a REC.

ASTM defines a "CREC" as a REC resulting from a past release of hazardous substances or petroleum products that has been addressed to the satisfaction of the applicable regulatory authority (for example, as evidenced by the issuance of a no further action letter or equivalent, or meeting risk-based criteria established by regulatory authority), but with hazardous substances or petroleum products allowed to remain in place subject to the implementation of required controls (for example, property use restrictions, activity and use limitations, institutional controls, or engineering controls).

*De minimis* conditions are not RECs. The term includes hazardous substances or petroleum products even under conditions in compliance with laws. As indicated, the term REC does not include de minimis conditions, which generally do not present a material risk to human health and would not likely be subject to enforcement action if brought to the attention of governmental agencies.

This ESA was conducted in accordance with our proposal to City of Glendale Department of Water and Power dated September 17, 2015 and Client's authorization on October 1, 2015. The scope of work conducted during this Phase I ESA consisted of a visual reconnaissance of the Property, interviews with

key individuals, and review of reasonably ascertainable documents. The scope of work did not include an assessment for environmental regulatory compliance of any facility ever operated at the Property (past or present), or sampling and analyzing of environmental media. Stantec was not contracted to perform any independent evaluation of the purchase or lease price of the Property and its relationship to current fair market value. The conclusions presented in this ESA report are professional opinions based on data described herein. The opinions are subject to the limitations described in Section 2.3.

ASTM E1527-13 notes that the availability of record information varies from source to source. The User or Environmental Professional is not obligated to identify, obtain, or review every possible source that might exist with respect to a property. Instead, ASTM identifies record information that is reasonably ascertainable from standard sources. "Reasonably ascertainable" means:

(1) Information that is publicly available;

(2) Information that is obtainable from its source within reasonable time and cost constraints; and

(3) Information that is practicably reviewable.

## 2.1 PROPERTY DESCRIPTION

As part of a repowering project, the City of Glendale, Department of Water and Power plans to demolish the Grayson Power Plant Boiler Building; replace cooling towers 1 through 5 to more efficient models; and replace the generation units between Cooling Tower 1 and 2, designated as Unit 8A, 8B, and 8C. A majority of the buildings located at the Grayson Power Plant, with the exception of Unit 9, a simple cycle peaking plant built in 2003, were completed in or before 1977 and have reached their useful life and need to be replaced with more reliable, efficient, and cleaner units. The repowering of the plant is necessary to meet current and future load as well as supporting the renewable power generation that the City of Glendale is either building or buying. The City of Glendale Department of Water and Power is proposing to replace all the existing generation facilities and their related infrastructure, with the exception of Unit 9, by removing all existing above ground and underground equipment and facilities and building new generation facilities. The Property reportedly operated as a power plant since 1934 and was reportedly vacant and undeveloped land prior to 1934. A Property location map is illustrated on Figure 1. A Property map illustrating the main features of the Property and its vicinity is provided as Figure 2. Photographs taken during the site reconnaissance visit are provided in Appendix A.

## 2.2 SPECIAL TERMS, CONDITIONS, AND SIGNIFICANT ASSUMPTIONS

The possible contaminants of concern considered in this assessment include those hazardous compounds listed under the Comprehensive Environmental Response, Compensation, and Liability Act (CERCLA). Other than adherence to Client specific scope of work requirements, there were no other special terms, conditions, or significant assumptions associated with the Phase I ESA.

## 2.3 EXCEPTIONS AND LIMITING CONDITIONS

This report documents work that was performed in accordance with generally accepted professional standards at the time and location in which the services were provided. No other representations, warranties or guarantees are made concerning the accuracy or completeness of the data or conclusions contained within this report, including no assurance that this work has uncovered all potential and actual liabilities and conditions associated with the identified property.

This report provides an evaluation of selected environmental conditions associated with the identified portion of the property that was assessed at the time the work was conducted and is based on information obtained by and/or provided to Stantec at that time. There are no assurances regarding the accuracy and completeness of this information. All information received from the client or third parties in the preparation of this report has been assumed by Stantec to be correct. Stantec assumes no responsibility for any deficiency or inaccuracy in information received from others.

If a service is not expressly indicated, do not assume it has been provided. If a matter is not addressed, do not assume that any determination has been made by Stantec in regards to it.

Conclusions made within this report consist of Stantec's professional opinion as of the time of the writing of this report, and are based solely on the scope of work described in the report, the limited data available and the results of the work. They are not a certification of the property's environmental condition.

The client did not provide or contract Stantec to provide recorded title records or search results for environmental liens or activity and use limitations encumbering the property or in connection with the Property. These represent data gaps; however, these data gaps are not considered significant. Based on the information obtained during the course of this ESA and general knowledge of development at and near the Property, the absence of this information did not affect the ability of the Environmental Professionals to identify RECs, HRECs, CRECs, or de minimis conditions.

This report relates solely to the specific project for which Stantec was retained and the stated purpose for which this report was prepared and shall not be used or relied upon by the client identified herein for any variation or extension of this project, any other project or any other purpose.

This report has been prepared for the exclusive use of the client identified herein and any use of or reliance on this report by any third party is prohibited, except as may be consented to in writing by Stantec or as required by law. The provision of any such consent is at Stantec's sole and unfettered discretion and will only be authorized pursuant to the conditions of Stantec's standard form reliance letter. Stantec assumes no responsibility for losses, damages, liabilities or claims, howsoever arising, from third party use of this report.

The locations of any utilities, buildings and structures, and property boundaries illustrated in or described within this report, if any, including pole lines, conduits, water mains, sewers and other surface or sub-surface utilities and structures are not guaranteed. Before starting work, the exact location of all such utilities and structures must be confirmed by the client and Stantec assumes no liability resulting from damage to such utilities and structures.

The conclusions are based on the site conditions encountered by Stantec at the time the work was performed. Accordingly, additional studies and actions may be required. As the purpose of this report is to identify selected site conditions which may pose an environmental risk; the identification of non-environmental risks to structures or people on the site is beyond the scope of this assessment. The findings, observations, and conclusions expressed by Stantec in this report are not an opinion concerning the compliance of any past or present owner or operator of the site which is the subject of this report with any Federal, state or local law or regulation.

This report presents professional opinions and findings of a scientific and technical nature. It does not and shall not be construed to offer a legal opinion or representations as to the requirements of, nor compliance with, environmental laws, rules, regulations or policies of Federal, state or local governmental agencies. RECs raised by the report should be reviewed by client legal counsel.

Stantec specifically disclaims any responsibility to update the conclusions in this report if new or different information later becomes available or if the conditions or activities on the property subsequently change.

## 2.4 PERSONNEL QUALIFICATIONS

This Phase I ESA was conducted by, or under the supervision of, an individual that meets the ASTM definition of an Environmental Professional (EP). The credentials of the EP and other key Stantec personnel involved in conducting this Phase I ESA are provided in Appendix B.

# 3.0 USER-PROVIDED INFORMATION

ASTM E1527-13 describes responsibilities of the User to complete certain tasks in connection with the performance of "All Appropriate Inquiries" into the Property. The ASTM standard requires that the Environmental Professional request information from the User on the results of those tasks because that information can assist in the identification of RECs, CRECs, HRECs, or de minimis conditions in connection with the Property. Towards that end, Stantec requested that the User provide the following documents and information:

| Description of Information | Provided (Yes / No) | Description and/or Key Findings |
|---|---|---|
| User Questionnaire/Interview/Information | Yes | The User provided access to the Property. The User also provided information on the generation units present at the Property. More information is provided in Section 3.1. |
| Environmental Liens or Activity Use Limitations | No | The user reportedly does not possess any of these documents. |
| Previous Environmental Permits or Reports Provided by User | No | The user reportedly does not possess any of these documents. |
| Purpose of the Phase I ESA | Yes | As part of the proposed repowering project, the City of Glendale, Department of Water and Power plans to demolish the Grayson Power Plant Boiler Building; replace cooling towers 1 through 5 to more efficient models; and replace the generation units between Cooling Tower 1 and 2 designated as Unit 8A, 8B, and 8C. |

## 3.1 INFORMATION PROVIDED BY USER

The User provided information of all the generation units present at the Property as of October 8, 2015. The information is tabulated below:

| Unit | Status | Capacity (MW) | Comment | Start Date | ETR* Date |
|---|---|---|---|---|---|
| Unit 1 | Unavailable | 0 | #1 Unit offline 1140 hrs. 9/24/15. Still on test mode. | Sep 24, 2015 11:40 | Oct 9, 2015 18:00 |
| Unit 2 | On Line | 1 | -- | Apr 9, 2015 11:26 | -- |

| | | | | | |
|---|---|---|---|---|---|
| Unit 3 | Hot Stand-By | 10 | Capacity restricted to 10 MW's, no Large F.D. Fan | Sep 25, 2015 12:00 | -- |
| Unit 4 | Unavailable | 0 | Boiler retube | Apr 13, 2015 0:00 | Jun 1, 2016 18:00 |
| Unit 5 | On Line | 40 | -- | Sep 3, 2015 12:03 | -- |
| Unit 8A | Hot Stand-By | 34 | 0800- #8A Unit emergency only restriction lifted, unit available in hot standby status | Oct 8, 2015 8:00 | -- |
| Unit 8B and 8C | Hot Stand-By | 68 | -- | Sep 26, 2015 21:25 | -- |
| Unit 9 | Hot Stand-by | 48 | -- | Oct 5, 2015 15:15 | -- |

**Notes:**
*ETR date: Estimated time of Return/Repair Date
F.D. Fan: Boiler fan
MW: Megawatt
Hot Stand-By: additional capacity available to start immediately but not running

The User provided information is included in Appendix C.

# 4.0 PREVIOUS ENVIRONMENTAL WORK

Since the operation of the Property as a power plant in 1934, numerous site investigations have been conducted as reported in prior environmental reports, which were obtained from Regulatory Agency Records (Regional Water Quality Control Board – Los Angeles Region {RWQCB-LA} and the Department of Toxic Substances Control {DTSC}). Since the 1970s, the Property has been under the oversight of the RWQCB-LA for assessment of impacts to soil and groundwater.

Findings from these documents are summarized below:

- **THE PROPERTY:**
  - The Property reportedly underwent modifications from 1938-1958 and during the late 1970s. The Property was issued RWQCB permits in 1972 and 1974 for reuse and discharge of cooling water (DTSC, 1984).
  - The Property reportedly stored polychlorinated biphenyl (PCB) contaminated capacitors on a temporary basis during 1979 to 1983. These capacitors were periodically disposed of in compliance with the State of California regulations, and "extremely hazardous waste disposal permits" were issued (DTSC, 1984).
  - A water softening plant located near Cooling Tower 1 was removed and replaced between 1950 and 1960. It included one concrete brine tank, one concrete softening tank, one concrete salt pit, three water tanks and four "softening plant" tanks (Environmental Audit, 1994).
  - An incident occurred in approximately 1982-1984 in which an insulator blew out in one of the transformers located in the switch yard, causing the breaker to explode, resulting in release of mineral oil (not containing PCBs) to the immediate area of the transformer location (Environmental Audit, 1994).
  - An oil spill of unrecorded volume occurred in 1991 near Cooling Tower 1.

- **USTs AND ASTs:**

  Former tank farms 6 and 7 (consisting of 6 USTs storing fuel oil) located adjacent to Cooling Tower 5 and former tank farm 8 (consisting of five USTs storing fuel oil), located adjacent to Cooling Tower 2 were permanently closed in 1990. As of 1991, six day tanks storing fuel oil, two aboveground caustic storage tanks, and two aboveground sulfuric acid tanks were present throughout the Property and south of the Property (Background Memo, 1991). Review of groundwater well sample data indicated that impacts of petroleum-based hydrocarbons were detected in Bunker # 9 which is south of the

Verdugo Wash and not part of the Property at present (Leak Detection and Tank Monitoring Report, 1990).

- **SOIL:**

  Over the years, soil samples have been collected throughout the Property at various locations including former tank farm 6 (6a, 6b, 6c), 7 (7a, 7b, 7c), 8 (8a, 8b, 8c, 8d, 8e) and former tank farm 9 (not part of existing Property); day tanks 1, 2, 3; former fuel tank 5; and south of the Property also known as Verdugo Wash area. A directive from RWQCB – LA dated June 30, 2010 stated No Further Action for hexavalent chromium (maximum detected concentration – 2.03 mg/kg) in soil at the Property (RWQCB-LA, 2010). Other onsite contaminants of concern included 1,1-dichloroethylene, tetrachloroethylene (PCE), trichloroethylene (TCE), and total recoverable petroleum hydrocarbons (Addendum to Subsurface soil and Hydrogeologic Investigation, 1994).

- **SOIL VAPOR:**

  Approximately 130 soil vapor samples were collected throughout the Property in 1995 to identify potential source of TCE concentrations in groundwater and soil vapor. The highest TCE concentration detected was 103.5 micrograms per liter – volume (µg/L-volume). The results indicated that TCE in soil gas was derived from off-gassing of TCE in the groundwater (Soil Vapor Assessment and Groundwater Sampling, 1995);

- **GROUNDWATER**

  Groundwater monitoring wells MW-1 through MW-6 were installed in November 1989; MW-7 was installed in March 1990; MW-8 through MW-12 were installed in December 1993 and MW-13 was installed in May 1994. Two production water wells are also present on the Property and were installed in the 1940s and 1950s respectively. These production wells are used as a backup condensation water source for the power plant's boiler cooling operations (Environmental Audit, 1994). Approximately 30 groundwater samples were collected throughout the Property in 1995 to identify potential source of TCE concentrations in groundwater. The highest TCE concentration detected was 3,000 µg/L (Soil Vapor Assessment and Groundwater Sampling, 1995). A directive from RWQCB – LA dated June 30, 2010 stated groundwater concentration of hexavalent chromium (maximum concentration detected: 0.145 mg/L) exceeded its Maximum Contaminant Level (MCL) of 0.1 mg/L; RWQCB-LA directed that additional groundwater monitoring was required (RWQCB letter, 2010). Other onsite contaminants of concern included 1,1-dichloroethylene, 1,1-dichloroethane, PCE, 1,1,1-trichloroethane, TCE, and total recoverable petroleum hydrocarbons (Addendum to Subsurface soil and Hydrogeologic Investigation, 1994). In response to a letter from the RWQCB-LA, dated June 3, 1992, the City of Glendale initiated a quarterly groundwater monitoring program starting the first quarter of 1993. In 1997, the RWQCB-LA reduced the quarterly groundwater monitoring event to a semi-annual event (Site Quarterly Report, 1997).

- **HAZMAT USE AND STORAGE AREA:**

Since 1934, various hazardous chemicals have been present on the Property for use at the power plant. The following information on these chemicals was obtained from the 'Chemical Storage and Use Questionnaire' of the RWQCB-LA:

Diesel booster – metal pressurized cans
Oil Treatment – plastic bottles
Car shampoo – plastic bottles
Fast break – metal pressurized cans
Utility cleaner – plastic bottles
Multipurpose cleaner – plastic bottles
Utility degreaser – plastic bottles
Brake cleaner – metal pressurized cans
Cleaner – plastic bottles
Engine starter – metal pressurized cans
Loctite super glue – plastic bottle
Fuel oil – 5,000 gallon UST
Vehicle Fuel – 20,000 gallon UST
Brake Fluid – 5 gallon metal cans
Diesel fuel – 10,000 gallon UST
Automotive coolant – 12 gallon plastic bottles
Scotch Kote electric coating – metal pressurized cans
Transformer Oil – 2,000 gallon UST
Degreaser – 55 gallon barrel
Coolant additive – 55 gallon barrel
Electrical insulin resin – boxes
Duct seal compound – bags
Silicone grease – plastic tubes
Epoxy adhesive – metal cans
Silica Gel – 6 gallon metal cans
Aluminum powder – bags
Aluminum alloy – plastic bag
Flux – plastic bottles
Spray flux – metal pressurized cans
Welding solvent – metal cans
Soldering paste – plastic bottle/tube
Solder – metal cans
Lubricant – plastic bottles
Household oil – metal cans
Graphite powder – plastic tubes
Fiberglass wax – Metal cans
Pipe joint compound – metal cans
Saniflush – 12 ounce cans
Ignition sealer – metal pressurized cans
PVC cement – metal cans
Sulfur hexafluoride – metal pressurized tank
Windshield washer fluid – plastic bottles
Oil additive – plastic bottles
Universal gear lube – 90 gallon barrels

Armorall – 35 gallon barrel
Hydraulic oil – 110 gallon barrel
Motor oil – 165 gallon barrel
Tire lube – 5 gallon plastic bucket/ metal cans
Testing gas – pressurized metal can
Carburetor dip – metal bucket
Vehicle detergent – plastic bottle
Sheeting agent – plastic bottle
Hand cleaner – plastic bottle
Fire retardant – fire extinguisher
Solvent – metal cans
Universal cement – metal cans
Liquid buffer – metal cans
Lacquer thinner – metal cans
Transmission fluid – 110 gallon barrel
Hydraulic oil – 110 gallon barrel
Crankcase oil – 55 gallon barrel
Motor oil – 165 gallon barrel
Spray Galvanize – metal pressurized cans
Silicon gasket – plastic bottles
Battery acid – 50 gallon automotive batteries
Jack oil – plastic bottles
Aluminum solder – metal cans
Ignition sealer – metal pressurized cans
Brakleen – metal pressurized cans
Chain lube – metal pressurized cans
White grease – plastic bottles
Safety paint – metal cans
Propane – 1,500 gallon AST
Spray paint – metal pressurized cans
Welding gas – metal pressurized tanks
Ethyl alcohol – 25 gallon metal cans
Toluene – 10 gallon metal pressurized cans
Butyl acetate – metal cans
Antifreeze – 100 gallons plastic disposable tanks
Gasoline – 28,000 gallon UST
PCBs – 1,000 plus gallons in transformers
Phosphinate/phosphonate - 500 gallon AST
Liquid alum – 4,000 gallon AST
Primer # 2 – 2 gallon metal cans
Alumnapoxy 75A1 component B – 7 gallon cans

All chemicals were reportedly stored indoors, covered, on concrete surface, and with sealed containers.

# 5.0 RECORDS REVIEW

The objective of consulting historical sources of information is to develop the history of the Property and surrounding area, in order to evaluate if past uses may have resulted in RECs. Physical setting records are evaluated to determine if the physical setting may have contributed to adverse environmental conditions in connection with the Property. During the review of historical records, Stantec attempted to identify uses of the Property from the present to the first developed use of the Property. Stantec's research included the reasonably ascertainable and useful records described in this section.

## 5.1 PHYSICAL SETTING

A summary of the physical setting of the Property is provided in the table below with additional details in the following subsections

| | |
|---|---|
| Topography: | Section 5, Township 1N, and Range 13W. Burbank 7.5 Minute topographic quadrangle. General topographic gradient is southwest. |
| Soil/Bedrock Data: | Boring logs obtained from prior assessments at the Property stated that soils consist predominantly of discontinuous lenses of silt, sandy silt, and gravel. |
| Estimated Depth to Groundwater/<br>Estimated Direction of Gradient: | Depth to groundwater at the Property has been reported to be at approximately 37 feet below ground surface (feet bgs; see Section 5.1.3). Groundwater flow direction for the Property was reported to be southwest. |
| *Note: Site-specific groundwater direction and depth can only be determined by conducting site-specific testing, which Stantec has not conducted.* | |

### 5.1.1 Property Topography and Surface Water Flow

The Property is located at an elevation of approximately 467 feet above mean sea level (ft msl). Based on the topography and existing surface conditions, general surface water flow is to the southwest.

### 5.1.2 Regional and Property Geology

The Property is located in the southeastern end of the San Fernando Valley Basin. The Basin consists of Quaternary alluvial valley fill with a maximum depth of approximately 1,000 feet. Alluvial deposits which comprise the eastern portion of the basin consist almost entirely of detrital material derived from the crystalline basement complex of the San Gabriel Mountains. These sediments contain a majority of sand and gravel interbedded with silt and clay.

Based on soil samples collected during prior site assessment activities on the Property, soils consisted predominantly of silt, sandy silt and gravel with silt to a depth of approximately 35 feet; gravel and gravel with sand interlayered with silty sand from approximately 35-60 feet.

### 5.1.3 Regional and Property Hydrogeology

Hydrologically, the Property is located in the southeastern portion of the San Fernando Valley Basin, an area of the basin which is characterized by high soil permeability and groundwater production. Groundwater is generally confined within the basin with depth to groundwater approximately 40 – 200 feet. The general direction of groundwater flow is southwesterly from the recharge areas on the alluvial fans along the edges of the valley fill toward the basin outlet area at the Los Angeles River Narrows.

Previous groundwater monitoring events conducted at the Property reported the depth to water as approximately 37 feet bgs.

## 5.2 FEDERAL, STATE AND TRIBAL ENVIRONMENTAL RECORDS

A regulatory agency database search report was obtained from Environmental Data Resources Inc. (EDR), a third-party environmental database search firm. A complete copy of the database search report, including the date the report was prepared, the date the information was last updated, and the definition of databases searched, is provided in Appendix D.

Stantec evaluated the information listed within the database relative to potential impact to the Property, assessing the potential for impacts based in part on the physical setting. As part of this process, inferences have been made regarding the likely groundwater flow direction at or near the Property. As described in 5.1.3, the inferred shallow groundwater flow direction is likely to be southwest. Observations about the Property and surrounding properties made during the Property reconnaissance are provided in more detail in section 5.

### 5.2.1 Listings for Property

The Property was identified in seventeen of the environmental databases searched (as three addresses: 800 Air Way, 5750 San Fernando Road and 634 Bekins Way), including: CERC-NFRAP, RCRA-SQG, ENVIROSTOR, HIST UST, CHMIRS, NPDES, RMP, SWEEPS UST, CA FID UST, EMI, LA Co. Site Mitigation, HAZNET, US AIRS, HIST UST, HAZNET, LOS ANGELES CO. HMS, RGA LUST, RMP, FINDS, SLIC, WIP, WDS, HIST CORTESE and LUST databases. The EDR Radius Map Report is included in Appendix D.

<u>CERC-NFRAP</u>

The Property was not qualified for the National Priority List based on the information reported during the preliminary assessment conducted in 1984.

<u>RCRA-SQG</u>

The Property is listed in the database under the name *City of Glendale*. The City reportedly generated ignitable waste, corrosive waste, arsenic, mercury and PCE (December 2002). No violations were reported.

ENVIROSTOR

The Property is listed in the database under the name *City of Glendale Grayson Power Plant* with polychlorinated biphenyls (PCBs) as the potential contaminant of concern and onsite storage of PCB transformers.

Historical UST

The Property is listed on the State historical database under the name *City of Glendale Grayson Power Plant* and in 1959 reportedly maintained three 10,000-gallon fuel USTs and one 1,000-gallon waste oil UST. The Property is also listed on the State historical database under the name *Grayson Power Plant* and reportedly maintained one 909,000-gallon fuel tank installed in 1940, one 913,500-gallon fuel tank installed in 1947, one 907,500-gallon fuel tank installed in 1953, one fuel tank of unknown capacity installed in 1959, three 40,000-gallon diesel tanks installed in 1971, three 40,000-gallon diesel tanks installed in 1973, five 32,500-gallon diesel tanks installed in 1977 and one 2,590,000-gallon diesel tank installed in 1977.

CHMIRS

The Property is listed in the database under the name *City of Glendale Grayson Power Plant* and in 1998 reportedly had an overfill incident in one of the storage tanks and 10 gallons of fuel oil was released to the storm drains and into the Los Angeles River, but was reported to be contained.

NPDES

The Property is listed in the database under the name *City of Glendale Grayson Power Plant* and is reported to be an industrial facility with an active NPDES permit as of June 2015, with stormwater discharge in the Los Angeles River.

RMP

The Property is listed in the database under the name *City of Glendale Grayson Power Plant* and is reported to possess a Risk Management Plan for onsite activities. The Property is also listed in the database under the name *GWP Utility Operations Center Storage*.

SWEEPS UST

The Property is listed in the database under the name *Glendale City, Public Service*, and reported: ten active 40,000-gallon fuel tanks and unknown number of 1,000-gallon diesel tanks; and with four active 1,000-gallon waste oil tanks and unknown number of active 10,000-gallon fuel tanks.

The Property is also listed in the database under the name *Glen City, Glendale Water and Power,* and reported: seven active 40,000-gallon fuel tanks.

The Property is also listed in the database under the name *Grayson Power Plant* and reported: four active 32,500-gallon diesel tanks.

The Property is also listed in the database under the name *Grayson Power Plant Larry Moorehouse* and reported: four active 1,000-gallon waste oil tanks and unknown number of active 10,000-gallon fuel tanks.

CA FID UST

The Property is listed in the database under the name *Glendale City, Public Service* as an active facility with Facility ID number 19001552.

The Property is also listed in the database under the name *Grayson Power Plant* as an active facility with Facility ID number 19010743.

The Property is also listed in the database under the name *Grayson Power Plant Larry Moorehouse* as an active facility with Facility ID number 19056738.

EMI

The Property is listed in the database under the name *Glendale City, Public Service* as a facility emitting 2 tons per year of total organic hydrocarbon gases, 2 tons per year of reactive organic gases and 7 tons per year of carbon monoxide emissions in 1993 and 1995; 68 tons per year of total organic hydrocarbon gases, 19 tons per year of reactive organic gases, 33 tons per year of carbon monoxide emissions, 80 tons per year of oxides of nitrogen, 2 tons per year of oxides of sulfur, 4 tons per year of particulate matter, 4 tons per year of particulate matter 10 micrometers and smaller in 1997, 1999, 2000; 79 tons per year of total organic hydrocarbon gases, 20 tons per year of reactive organic gases, 33 tons per year of carbon monoxide emissions, 80 tons per year of oxides of nitrogen, 2 tons per year of oxides of sulfur, 4 tons per year of particulate matter, 4 tons per year of particulate matter 10 micrometers and smaller in 1998; 454 tons per year of total organic hydrocarbon gases, 59 tons per year of reactive organic gases, 131 tons per year of carbon monoxide emissions, 341 tons per year of oxides of nitrogen, 2 tons per year of oxides of sulfur, 19 tons per year of particulate matter, 19 tons per year of particulate matter 10 micrometers and smaller in 2001; 61 tons per year of total organic hydrocarbon gases, 15 tons per year of reactive organic gases, 37 tons per year of carbon monoxide emissions, 34 tons per year of oxides of nitrogen, 3 tons per year of oxides of sulfur, 16 tons per year of particulate matter, 15 tons per year of particulate matter 10 micrometers and smaller in 2009; 31 tons per year of total organic hydrocarbon gases, 11 tons per year of reactive organic gases, 60.5 tons per year of carbon monoxide emissions, 40 tons per year of oxides of nitrogen, 2.6 tons per year of oxides of sulfur, 37 tons per year of particulate matter, 32 tons per year of particulate matter 10 micrometers and smaller in 2010; and 40 tons per year of total organic hydrocarbon gases, 11 tons per year of reactive organic gases, 54 tons per year of carbon monoxide emissions, 36 tons per year of oxides of nitrogen, 3 tons per year of oxides of sulfur, 34 tons per year of particulate matter, 29 tons per year of particulate matter 10 micrometers and smaller in 2011.

The Property is also listed in the database under the name *Glendale City, Glendale Water & Power* as a facility emitting 26 tons per year of total organic hydrocarbon gases, 12 tons per year of reactive organic gases, 22 tons per year of carbon monoxide emissions, 32 tons per year of oxides of nitrogen, 1.3 tons per year of oxides of sulfur, 3.18 tons per year of particulate matter, 3.15 tons per year of particulate matter 10 micrometers and smaller in 2006 and 2007; 32 tons per year of total organic hydrocarbon gases, 13 tons per year of reactive organic gases, 29 tons per year of carbon monoxide emissions, 37 tons per year of oxides of nitrogen, 1.4 tons per year of oxides of sulfur, 3.5 tons per year of particulate matter, 3.5 tons per year of particulate matter 10 micrometers and smaller in 2008; and 80 tons per year of total organic hydrocarbon gases, 15 tons per year of reactive organic gases, 62 tons per year of carbon monoxide emissions, 37 tons

per year of oxides of nitrogen, 2.9 tons per year of oxides of sulfur, 36 tons per year of particulate matter, 31 tons per year of particulate matter 10 micrometers and smaller in 2012.

The Property is also listed in the database under the name *Grayson Power Plant* as a facility emitting 18 tons per year of total organic hydrocarbon gases, 5 tons per year of reactive organic gases, 35 tons per year of carbon monoxide emissions, 323 tons per year of oxides of nitrogen, 3 tons per year of oxides of sulfur, 6 tons per year of particulate matter, 5 tons per year of particulate matter 10 micrometers and smaller in 1987; 22 tons per year of total organic hydrocarbon gases, 7 tons per year of reactive organic gases, 46 tons per year of carbon monoxide emissions, 310 tons per year of oxides of nitrogen, 5 tons per year of oxides of sulfur, 6 tons per year of particulate matter, 6 tons per year of particulate matter 10 micrometers and smaller in 1990; 49 tons per year of total organic hydrocarbon gases, 16 tons per year of reactive organic gases, 26 tons per year of carbon monoxide emissions, 116 tons per year of oxides of nitrogen, 1 ton per year of oxides of sulfur, 4 tons per year of particulate matter, 4 tons per year of particulate matter 10 micrometers and smaller in 1993 and 1995; 98 tons per year of total organic hydrocarbon gases, 20 tons per year of reactive organic gases, 27 tons per year of carbon monoxide emissions, 109 tons per year of oxides of nitrogen, 2 tons per year of oxides of sulfur, 4 tons per year of particulate matter, 4 tons per year of particulate matter 10 micrometers and smaller in 1996; and 12 tons per year of total organic hydrocarbon gases, 7 tons per year of reactive organic gases, 22 tons per year of carbon monoxide emissions, 39 tons per year of oxides of nitrogen, 1.4 tons per year of oxides of sulfur, 3.4 tons per year of particulate matter, 3.34 tons per year of particulate matter 10 micrometers and smaller in 2005.

<u>LA Co. Site Mitigation</u>

The Property is listed in the database under the name *Glendale City, Public Service*. No other information was reported.

<u>HAZNET</u>

The Property is listed in the database under the name *Los Angeles County Sanitation Districts* and in 1996 was reported to recycle 2.74 tons, transfer 37 tons of household waste, and dispose 8.5 tons of household waste and was also reported to transfer 5.85 tons of waste oil and mixed oil.

The Property is also listed in the database under the name *Glendale City Of* and in 2013 was reported to store, bulk, transfer offsite 20.84, 0.1, 1.6 and 0.075 tons of unknown waste and was also reported to dispose 0.2 tons of unknown waste by fuel blending prior to energy recovery at another site.

<u>US AIRS</u>

The Property is listed in the database under the name *Glendale City, Public Service – Grayson Pwr*. The Property was reported in the air program 'State Implementation Plan for National Primary and Secondary Ambient Air Quality Standards and Title V permits.

<u>LOS ANGELES CO. HMS</u>

The Property is listed in the database under the name *Glendale City, Glendale Water & Power* with two permits (1833T and 4815T) with status 'Removed'.

RGA LUST

The Property is listed in the database under the name *Grayson Power Plant* and according to the records reportedly contained unknown number of leaking USTs from 1993 through 1998.

FINDS

The Property is listed in the database under the name *GWP Utility Operations Center Storage* with Registry ID number 110013829330.

SLIC

The Property is listed in the database under the name *Grayson Power Plant* with Global ID number SL603798950. The Property obtained the 'Completed – Case Closed' status on June 29, 2011 from the RWQCB – LA Region.

WIP

The Property is listed in the database under the name *Grayson Power Plant* with File number 109.0756 and file status 'Backlog'.

LUST

The Property is listed in the database under the name *Grayson Power Plant* with the Global ID number T0603700174 as a LUST Cleanup Site with reported leak in 1988 and case closure in 1997.

The Property is also listed in the database under the name *Grayson Power Plant* with the Global ID number T0603702041 as a LUST Cleanup Site for a release of heating oil/fuel oil to soil. The status with the lead regulatory agency, RWQCB LA Region, is listed as Completed – Case Closed as of July 23, 1996.

HISTORICAL CORTESE

The Property is listed in the database under the name *Grayson Power Plant* with regulatory identification number 109.0756.

The Property is also listed in the database under the name *Grayson Power Plant* with regulatory identification number 912030016.

WDS

The Property is listed in the database under the name *Grayson Power Plant* with facility ID 4 191001606 and status as 'Active – Any facility with a continuous or seasonal discharge that is under Waste Discharge Requirements'. The Property is reported to be a minor threat to water quality if violations occur.

The use and storage of petroleum hydrocarbons and hazardous materials on the Property is considered a recognized environmental condition (REC). The Property was under the oversight of the Regional Water Quality Control Board – Los Angeles for assessment.

### 5.2.2 Listings for Nearby Sites with Potential to Impact Property

Stantec assessed data presented in the environmental agency database search report to evaluate the potential for conditions to pose a REC, CREC, or HREC for the Property.

Based on this evaluation, the following individual facilities were identified as the most likely potential sources of impact to the Property. The basis for why each of the following listed databases creates a REC for the property is also provided.

| Listed Facility Name/Address | Database Listing | Distance/Direction from Property | REC? (YES / NO) |
|---|---|---|---|
| Hall's Bob Union Service;<br>5744 San Fernando Road | EDR US Hist Auto Stat | 0.029 miles/ 155 feet<br>East<br>Higher elevation | Yes |
| This adjacent site was listed in the database as a gas station in 1945, 9155, 1957, 1960, 1964, 1967 and 1972. Although no leaks or violations were reported, due to the site's proximity and historical use as a gas station, it is considered a REC. | | | |
| 99174; T C Gulf Service<br>5700 San Fernando Road | HIST UST | 0.030 miles/ 159 feet<br>East southeast<br>Higher elevation | Yes |
| The site was listed as a gas station in 1955, 1957, 1964, 1965, 1967, 1968, 1970, 1972, 1973 and 1977. The HIST UST database reported that the site maintained a 5,000 and two 10,000-gallons product tank and a 1,000-gallon waste oil tank in 1968. No leaks or violations were reported.<br><br>Due to the site's proximity and historical use as a gas station, it is considered a REC. | | | |
| Bargin Gas; Former Emilio's Auto /Apex Auto; Highland ARCO; Emilio's Gulf Service<br>5800 San Fernando Road | SWEEPS UST<br>Los Angeles Co. HMS<br>LUST<br>WIP<br>HIST CORTESE<br>HIST UST | 0.030 miles/ 159 feet<br>East southeast<br>Higher elevation | Yes |
| The site was listed as a facility which stored four USTs in 1991. The site was also listed as a LUST Cleanup site with status 'Preliminary site assessment workplan submitted' as of 4/1/2000 with soil as the affected media and gasoline as the contaminant of concern. The site eventually received closure on 6/7/2000. The site also reportedly maintained five USTs in 1984. The site operated as a gas station in 1970, 1971, 1972, 1999, and 2001 through 2012. Due to the release, this site also meets the definition of a potential Vapor Encroachment Condition (VEC) as defined by ASTM E2600-10, and is considered a REC due to proximity and historic use as a gas station and an auto repair. | | | |
| Grand Central Air Terminal/Airport<br>1101 Air Way/1310 Air Way | SWF/LF<br>FUDS | 0.626 miles/3307 feet<br>Northwest<br>Higher Elevation | Yes |
| The site, comprised of approximately 189 acres, was listed as a former airport (Grand Central Airport) which operated from the 1920s through the 1950s. Between January 1942 and May 1943, the airport was acquired for use by the military as a training facility and a subsidiary airport.<br>At the time of the site visit, majority of the site was primarily owned by Disney and Glenair manufacturing. The site | | | |

| Listed Facility Name/Address | Database Listing | Distance/Direction from Property | REC? (YES / NO) |
|---|---|---|---|
| is currently located within the boundaries of the San Fernando Valley NPL Site, Glendale Operable Unit (San Fernando Superfund Site Area 2). Contamination at the Glendale Operable Unit consists of chlorinated solvents, namely TCE and PCE in groundwater.<br><br>Environmental impacts at airports may occur as a result of fuel storage, stormwater runoff and drainage systems, fuel hydrant systems, fuel transport and refueling, atmospheric deposition, electrical substations, and storage of chemical products by airport owners or tenants. The contaminants of concern may primarily include perfluorochemicals, benzene and TCE. Therefore, due to the site's proximity to the Property and its historical use as an airport, it is considered a REC. | | | |

The remaining listings in the database search report provided in Appendix D do not constitute a potential REC for the property.

## 5.3 LOCAL/REGIONAL ENVIRONMENTAL RECORDS

Stantec checked the following sources to obtain information pertaining to Property use and/or indications of RECs in connection with the Property:

### 5.3.1 California Department of Toxic Substances Control (DTSC) - Chatsworth

| Agency Name<br>Contact Information | Finding |
|---|---|
| Glen Castillo<br>DTSC Chatsworth<br>818-717-6521<br>Response Date: October 28, 2015 | DTSC Chatsworth reported that they possessed records for the Property. Further information is included in Section 4.0. |

### 5.3.2 DTSC - Cypress

| Agency Name, Contact Information | Findings |
|---|---|
| Jone Barrio<br>DTSC Cypress<br>714-484-5336<br>Response date: October 28, 2015 | DTSC Cypress reported that they did not find any records for the Property or the sites in the vicinity of the Property. |

### 5.3.3 County of Los Angeles – Department of Public Works (LA DPW)

| Agency Name, Contact Information | Findings |
|---|---|
| LA DPW<br>Fax: 626-458-3517 | LA DPW directed Stantec to www.ladpw.org/epd/cleanla/OpenFileReview.aspx to access their public records. The online research suggested that LA DPW does not have records related to industrial waste/underground storage tanks/stormwater for the Property. |

### 5.3.4 City of Glendale – Building and Planning Department

| Agency Name, Contact Information | Findings |
|---|---|
| Glendale City Clerk<br>Fax: 818-241-5386 | The City of Glendale requested that other sources of information be used for this report. |

### 5.3.5 Glendale Fire Department

| Agency Name, Contact Information | Findings |
|---|---|
| Glendale Fire Department<br>Fax: 818-241-5386 | The City of Glendale requested that other sources of information be used for this report. |

### 5.3.6 Regional Water Quality Control Board – Los Angeles (RWQCB-LA)

| Agency Name, Contact Information | Findings |
|---|---|
| Laura Gallardo<br>RWQCB - LA<br>Rb4-publicrecords@waterboards.ca.gov<br>Response Date: October 26, 2015 | RWQCB-LA reported that they possessed records for the Property. Further information is included in Section 4.0. |

### 5.3.7 Division of Oil, Gas, and Geothermal Resources (DOGGR)

| Agency Name, Contact Information | Findings |
|---|---|
| DOGGR<br>http://www.conservation.ca.gov/dog/Pages/Wellfinder.aspx | Oil wells were not reported on the Property or in the vicinity of the Property. |

## 5.4 HISTORICAL RECORDS REVIEW

### 5.4.1 Land Title Records/Deeds

Land title records and deeds were not provided by the User, and public records were not searched by Stantec.

### 5.4.2 Aerial Photographs

Stantec reviewed historical aerial photographs provided by EDR. The general type of activity on a property and land use changes can often be discerned from the type and layout of structures visible in the photographs. However, specific elements of a facility's operation usually cannot be discerned from aerial photographs alone. The following table summarizes Stantec's observations of the reviewed historical aerial photographs.

| Year | Scale | Observations, Property and Adjoining Properties |
|---|---|---|
| 1928 | 1"=500' | The Property appears vacant and undeveloped. Adjacent sites surrounding the Property also appear vacant. Los Angeles River appears west of the Property. |
| 1938 | 1"=500' | Multiple structures appear on the Property. The former Grand Central Airport (1310 Air Way) appears further north of the Property. Nearby properties to the east appear residential. |
| 1940 | 1"=500' | The Property appears to be partly constructed similar to the current configuration. Multiple rail spurs appear on the Property. Cooling towers, some aboveground tanks and portions of the boiler and turbine room are also observed in the photograph. The Los Angeles River appears to be constructed with a concrete channel. More development appears east of the Property. |
| 1952 | 1"=500' | Two cooling towers, two generation units and a rectangular building appear south of the Property. The switch rack appears in the southeastern corner of the Property. Some rectangular sections appear north of the Property. A |

| Year | Scale | Observations, Property and Adjoining Properties |
|---|---|---|
| | | residential development appears west of the Property, following the Los Angeles River. |
| 1964 | 1”=500’ | Five cooling towers, the power plant building, generation units, switch rack, and two rectangular and an “L” shaped structure appear on the Property. A rail spur also appears on the Property. Multiple structures (commercial) appear north and south of the Property. The airport and the residential development no longer appear to the further north and further west of the Property. |
| 1977 | 1”=500’ | Three additional rectangular structures, possibly parking structures appear north of the Property. An AST, possibly a fuel oil tank appears south of the Property. The 134 Freeway also appears to be constructed. |
| 1979 | 1”=500’ | No significant changes in the Property or the vicinity of the Property since the 1977 aerial photograph. |
| 1981 | 1”=500’ | No significant changes in the Property or the vicinity of the Property since the 1979 aerial photograph. |
| 1989 | 1”=500’ | No significant changes in the Property or the vicinity of the Property since the 1981 aerial photograph. |
| 1994 | 1”=500’ | No significant changes in the Property or the vicinity of the Property since the 1989 aerial photograph. |
| 2002 | 1”=500’ | No significant changes in the Property or the vicinity of the Property since the 1994 aerial photograph. |
| 2005 | 1”=500’ | No significant changes in the Property or the vicinity of the Property since the 2002 aerial photograph. |
| 2009 | 1”=500’ | No significant changes in the Property or the vicinity of the Property since the 2005 aerial photograph. |
| 2010 | 1”=500’ | No significant changes in the Property or the vicinity of the Property since the 2009 aerial photograph. |
| 2012 | 1”=500’ | No significant changes in the Property or the vicinity of the Property since the 2010 aerial photograph. |

Name of aerial photograph source: The EDR Aerial Photo Decade Package

### 5.4.3 City Directories

Stantec retained a third party to research available reverse city directories for the Property, in approximately five year intervals. The following is a general summary of Stantec’s review of the city directory listings:

| Subject/Adjoining Property | Year | Listed Occupants |
|---|---|---|
| Property – 800 Air Way | 1970<br>1967<br>1962 | Glendale City of Steam Plant Glendale<br>City of Glendale Corporate Yard<br>Glendale City of Steam Plant |
| Adjoining Properties | 1951 - 2013 | Various commercial/industrial listings |

Name of city directories and source: The EDR City Directory Abstract

### 5.4.4 Historical Fire Insurance Maps

Fire insurance maps were developed for use by insurance companies to depict facilities, properties, and their uses for many locations throughout the United States. These maps provide information on the history of prior land use are useful in assessing whether there may be potential environmental contamination on or near the Property. These maps, which have been periodically updated since the late 19th century, often provide valuable insight into historical Property uses.

Stantec contracted with a third party to search for copies of historical fire insurance maps covering the subject and immediately adjacent properties. The Sanborn® Map Search Report is presented in Appendix E.

| Year | Occupant of Property/Adjoining Properties; Indications of Hazardous Substance or Petroleum Usage |
|---|---|
| 1950 | Two cooling towers, boiler room, control room, turbine room, oil tank and a Switch and Transfer Yard were observed in the southern portion of the Property. The remaining portion of the Property appears vacant. Kellogg Avenue appears to the north, San Fernando Road appears to the east and Los Angeles River appears to the west. A rail spur appears to be bifurcating off from the rail lines and terminating by the Turbine Room for offloading of oil. The Property is titled as City of Glendale Steam Plant in this map. Gas station and a car wash appear on 5720 San Fernando Road, east of the Property. |
| 1965 | Five cooling towers, numerous fuel oil tanks, turbine rooms, boiler rooms, concentrated oil reservoirs, switch and transfer yard, auto repair and a machine shop, and truck parking appear on the Property. The bifurcating rail spur appears to be an oil unloading spur track. Former Fuel Tank no. 5 appears south of the Property. The surrounding properties appear a mix of commercial and light industrial properties. |

Name of maps and source: The EDR Certified Sanborn® Map Report

### 5.4.5 Historical Topographic Maps

Stantec reviewed historical topographic maps to help identify past Property usage and areas of potential environmental concern.

The United States Geological Survey (USGS) 7.5-Minute Topographic Map of Burbank Quadrangle (scale 1:24,000) was reviewed to identify local and regional physiographic features in the vicinity of the Property (see Figure 1). Based on our review of this data, the Property is located at an elevation of approximately 467 ft msl and the general topographic gradient is to the southwest.

During the review of the topographic maps, the Property appeared to be operating as a power plant between 1929 and 1953. An airport (Grand Central Airport) only appeared in the 1953 topographic map. Copies of the historical maps are provided in Appendix E. The following table summarizes the maps reviewed and our observations.

| Year | Scale | Observations, Property and Adjoining Properties |
|---|---|---|
| 1896 | 1:62,500 | No details regarding specific development of the Property were observed. No |

| Year | Scale | Observations, Property and Adjoining Properties |
|---|---|---|
| 1900 | 1:62,500 | structures or indicators of potential RECs for the Property were depicted on the maps. |
| 1901 | 1:250,000 | |
| 1902 | 1:62,500 | |
| 1920 | 1:62,500 | |
| 1928 | 1:24,000 | |
| 1953 | 1:24,000 | The Property is indicated as a power plant with three rectangular structures. A Standard gauge railroad, single track appears on the Property. the former Grand Central Airport (1310 Air Way) appears north of the Property. Los Angeles River appears west of the Property beyond which is the Rodger Young Village. |
| 1966 | 1:24,000 | The Property is indicated as a power plant with multiple structures. The airport does not appear to the north of the Property. The Rodger Young Village does not appear west of the Property. The 134 Freeway appears to be under construction. |
| 1972 Photorevised from 1966 | 1:24,000 | More structures appear on the Property (including aboveground Fuel Oil Tank # 5). The 134 Freeway appears to be constructed. |
| 1994 Photorevised from 1966 | 1:24,000 | No significant changes in the Property or the vicinity of the Property since the 1972 topographic map. |

Name of maps and source: The EDR Historical Topographic Map Report

### 5.4.6 Other Historical Sources

No other historical sources were researched.

# 6.0 SITE RECONNAISSANCE

A visit to the Property and its vicinity was conducted by Ms. Anuya Sawant on October 12, 2015 and July 6, 2016. During the first Property visit, Stantec was accompanied by Mr. Chris Reha, the Power Plant Shift Supervisor. Figure 2 provides information about the Property and adjoining properties and the location of potential areas of environmental concern. Photographs collected during the Property visits are included in Appendix A.

## 6.1 SITE RECONNAISSANCE METHODOLOGY

The Site reconnaissance focused on observation of current conditions and observable indications of past uses and conditions that may indicate the presence of a REC. The Property reconnaissance was conducted on foot and Stantec utilized the following methodology to observe the Property:

- Traverse the outer Property boundary.
- Traverse transects across the Property.
- Traverse the periphery of all structures on the Property.
- Visually observe accessible interior areas expected to be used by occupants or the public, maintenance and repair areas, utility areas, and a representative sample of occupied spaces.

Weather conditions during the visits to the Property were clear and sunny. There were no weather related Property access restrictions encountered during the reconnaissance visits.

## 6.2 GENERAL DESCRIPTION

| | |
|---|---|
| **Property and Area Description:** | The Property is located in an urban development. Surrounding properties include combination of commercial and industrial properties. |
| **Property Operations:** | The Property operates as an electric power plant. |
| **Structures, Roads, Other Improvements:** | The Property consists of the following buildings/structures:<br>Cooling Tower 1, 2, 3, 4 and 5<br>Three chemical storage areas<br>Reverse Osmosis unit<br>Demineralized treatment water<br>Boiler Room Building<br>Switch Rack<br>Department of Public Works garage<br>Superintendent Building, offices, lunch rooms<br>Five turbine rooms<br>Maintenance building<br>Two Carports |
| **Property Size (acres):** | 12.40 |

| | |
|---|---|
| **Estimated % of Property Covered by Buildings and/or Pavement:** | 80 |
| **Observed Current Property Use/Operations:** | Electric Power Plant |
| **Observed Evidence of Past Property Use(s):** | Electric Power Plant |
| **Sewage Disposal Method:** | City of Glendale |
| **Potable Water Source:** | Glendale Water and Power |
| **Electric Utility:** | Glendale Water and Power |

The Boiler building consisted of 6 floors, a basement and a mezzanine floor. At the time of site visit, following operations took place on these floors:

Basement: Storage area for lube oil used for pumps, turbines and air compressors, and for synthetic jet engine oil. The oil was stored in 55-gallon drums/barrels. Drums containing oil soaked absorbers, a boiler feed pump, a condensate pump and a designated citrus waste area (citrus waste converted to biogas). The drums were placed on secondary containment on concrete floor. No major spill/leak was observed. All drums appeared labeled. Two machine shops were also observed in the basement.

Mezzanine floor: Switch gear rooms, piping, storage of miscellaneous parts of various equipments and storage area for various unused equipments.

Floor 1: Boilers, burners, electrical panels and an office. Mr. Reha informed Stantec that there were a total of six boilers of which three were operational at that time and the other three have been shut down since the 1990's. Floor 1 also provides access to the Turbine room and cyclops crane. Mr. Reha informed Stantec that there were a total of five turbines of which two were temporarily shut down. A spill kit was observed near the boilers.

Floor 2: Office space.

Floor 3: Laboratory and conference room. The laboratory, used to test the reclaimed water, appeared to be in good condition.

Floor 4: Floor 4 provided access to the boilers. Also observed on this floor were feed water lines and soot blowers.

Floor 5: Deaerating tank system (DAS) and access to boilers. Some soot blowers observed (a soot blower is a device for removing the soot that is deposited on the furnace tubes of a boiler during combustion).

Floor 6: This floor consist of more soot blowers and an access to the boilers. Also observed was a door which led to the fire escape staircase.

## 6.3 HAZARDOUS SUBSTANCES AND PETROLEUM PRODUCTS

The following table summarizes Stantec's observations during the Property reconnaissance.

| Observations | Description/Location |
|---|---|
| **Hazardous Substances and Petroleum Products as Defined by CERCLA 42 U.S.C. § 9601(14):** | Several brake fluids, gear oils, heavy duty cleaner degreaser, wheel greaser, coolants, hydraulic oils, paints, and other hazardous substances were stored on the Property in Chemical Storage Area in varying quantities. |
| **Drums (≥ 5 gallons):** | Numerous 55-gallon drums/barrels were observed in the lube oil storage area in the basement of boiler building. Lube oil for pumps, turbines and air compressors; and synthetic jet engine oil observed. Most drums were placed on secondary containment and the surface of the ground was concrete. No spill observed. |
| **Strong, Pungent, or Noxious Odors:** | None detected. |
| **Pools of Liquid:** | Water basins at the bottom of the cooling towers 1 through 5 contain reclaimed water. |
| **Unidentified Substance Containers:** | None observed. |
| **PCB-Containing Equipment:** | Since the Property was an operating power plant, numerous transformers (pad and pole mounted) were stored along the eastern boundary of the Property. Mr. Reha reported that although a large number of the transformers were non-PCB, some may contain PCBs. |
| **Other Observed Evidence of Hazardous Substances or Petroleum Products:** | Numerous batteries were stored in the boiler room building. A laboratory present on the third floor of the boiler room building, stored lab supplies and chemicals required to test the reclaim water. |

No major changes were observed during the review of hazardous substances and petroleum products at the site on the July 6th 2016 site visit.

## 6.4 INTERIOR OBSERVATIONS

Stantec made the following observations during the Property reconnaissance of the building interiors at the Property and/or identified the following information during the interview or records review portions of the assessment:

| Observations | Description |
|---|---|
| **Heating/Cooling Method:** | Heating and cooling methods appeared to be provided by Heating, ventilation, and air condition units in the power plant building. No previous methods were reported or identified. |
| **Surface Stains or Corrosion:** | No major surface stains or corrosion observed. |
| **Floor Drains and Sumps:** | None observed. |

| Observations | Description |
|---|---|
| **Other Interior Observations:** | Numerous batteries were stored in the boiler room building. |

Due to site access restrictions, site walk through the interior of the Power Plant building was not conducted during the second site visit on July 6th 2016.

## 6.5 EXTERIOR OBSERVATIONS

Stantec made the following observations during the site reconnaissance of exterior areas of the Property and/or identified the following information during the interview or records review portions of the assessment:

| Observations | Description |
|---|---|
| **On-site Pits, Ponds, or Lagoons:** | None observed. |
| **Stained Soil or Pavement:** | No major staining observed. Cracks were observed on the pavement throughout the Property. |
| **Stressed Vegetation:** | None observed. |
| **Waste Streams and Waste Collection Areas:** | Designated temporary waste storage area was observed in the southern portion of the Property. No spills/ leaks were observed. |
| **Solid Waste Disposal:** | No areas indicative of solid waste disposal were observed. |
| **Potential Areas of Fill Placement:** | No mounds, piles or depressions suggesting the placement of fill material were observed on the Property. |
| **Wastewater:** | Wastewater is purified and discharged in the Los Angeles River. The Property has an active Waste Discharge Requirement (WDR) Permit. |
| **Stormwater:** | Stormwater drains were observed at various locations throughout the Property discharges to the Los Angeles River. The Property conducts frequent Stormwater monitoring. |
| **Wells:** | Five monitoring wells and one production well were observed. |
| **Septic Systems:** | No visible evidence of the existence of a septic system was observed. |
| **Other Exterior Observations:** | None observed. |

No major changes at the site were observed during the July 6th 2016 site visit.

## 6.6 UNDERGROUND STORAGE TANKS/STRUCTURES

| | |
|---|---|
| **Existing USTs:** | At least seven USTs were observed on the Property:<br>UST 1 for Cooling Tower 1 – Capacity: 908,964 gallons. Contents: No. 6 fuel oil. Construction: Concrete<br>UST 2 for Cooling Tower 2 – Capacity: 916,398 gallons. Contents: No. 6 fuel oil. Construction: Concrete<br>UST 3 for Cooling Tower 3 – Capacity: 907,578 gallons. Contents: No. 6 fuel oil. Construction: Concrete<br>UST 4 for Cooling Tower 4 – Capacity: 1,214,682 gallons. Contents: No. 6 fuel oil. Construction: Concrete<br>Three USTs adjacent to the Department of Public Works garage were being used at the fueling |

| | |
|---|---|
| | island. Contents, construction and capacity unknown. |
| **Former USTs:** | Prior reports state presence of the following former USTs at the Property:<br>Eleven USTs containing No. 2 fuel oil were present on the Property. Some of these were removed, some have been capped and sealed in-place in 1990. |
| **Other Underground Structures:** | Sumps observed and reported by Mr. Reha at various locations throughout the Property. |

## 6.7 ABOVEGROUND STORAGE TANKS

| | |
|---|---|
| **Existing ASTs:** | Following above ground tanks were observed:<br>Sodium Hypochlorite tank<br>Reverse osmosis tank<br>Ammonia tanks<br>Demineralized Water Tanks<br>Distilled water tanks<br>Acid tanks<br>Propane tank |
| **Former ASTs:** | Prior reports state presence of the following former ASTs at the Property:<br>Six fuel oil day tanks |

## 6.8 ADJOINING PROPERTIES

### 6.8.1 Current Uses of Adjoining Properties

As viewed from the Property and/or from public rights-of-way, Stantec made the following observations about use and activities on adjoining properties:

| | |
|---|---|
| **NORTH** | Power Plant warehouse, parking, receiving station followed by Flower Street. |
| **SOUTH** | Verdugo Wash followed by Fairmont Avenue on ramp towards 134 Freeway. |
| **EAST** | Railroad tracks owned by the Southern California Regional Rail Authority followed by San Fernando Road. |
| **WEST** | Fairmont Avenue followed by Los Angeles River. |

### 6.8.2 Observed Evidence of Past Uses of Adjoining Properties

Observations of adjoining properties providing indications of past use and activities, if any, are described below.

| | |
|---|---|
| **NORTH** | None observed. |
| **SOUTH** | None observed. |

| | |
|---|---|
| **EAST** | None observed. |
| **WEST** | None observed. |

### 6.8.3 Pits, Ponds or Lagoons on Adjoining Properties

As viewed from the Property and/or from public rights-of-way, Stantec made the following observations about the presence of pits, ponds and lagoons on adjoining properties:

| | |
|---|---|
| **NORTH** | None observed. |
| **SOUTH** | None observed. |
| **EAST** | None observed. |
| **WEST** | None observed. |

## 6.9 OBSERVED PHYSICAL SETTING

| | |
|---|---|
| **Topography of the Property and Surrounding Area:** | The Property and surrounding areas have a general topographic gradient of southwest. |

# 7.0 INTERVIEWS

Stantec conducted interviews with the following individuals:

| Name and contact information | Relationship to Property | Key findings: |
|---|---|---|
| Camilo Ruiz<br><br>Chris Reha | Senior Mechanical Engineer<br><br>Shift Supervisor | A completed Owner Questionnaire was not provided to Stantec at the time of submission of this report. During site reconnaissance, Mr. Reha accompanied Stantec personnel and provided information to the best of his knowledge. |

# 8.0 EVALUATION

This section provides a summary overview of or Findings, Opinions, and Conclusions.

## 8.1 FINDINGS AND OPINIONS

Information gathered from interviews, reviews of existing data review, and a property inspection was evaluated to determine if RECs are present in connection with the Property. Based on this information, Stantec made the following findings and developed the following opinions.

Finding 1: At least seven fuel oil USTs are maintained onsite and eleven USTs have been abandoned in the past. The Property also used to maintain fuel oil ASTs.

Opinion 1: Historical and current presence of fuel USTs and ASTs on the Property and at the overall power plant facility, is considered a REC.

Finding 2: Being a power plant, the Property has been storing PCB containing pad and pole mounted transformers onsite.

Opinion 2: Historical and current presence of numerous PCB containing transformers on the Property is considered a REC.

Finding 3: Adjacent properties (5720 San Fernando Road, 5700 San Fernando Road, and 5800 San Fernando Road) operated as gas stations in the past.

Opinion 3: The historical use of adjacent properties as gas stations, one of which meets the definition of a potential VEC as defined by ASTM E 2600-10, is considered a REC.

Finding 4: The boiler building has a lube oil storage area and there are three chemical storage areas on the Property storing miscellaneous chemicals and fuel oil in varying quantities.

Opinion 4: The historical and current storage of hazardous chemicals and fuel oil on the Property is considered a REC.

Finding 5: Use of the nearby property (1310 Air Way) as an airport from the 1920s to the 1950s.

Opinion 5: Due to the proximity and historical use of the nearby property as an airport, it is considered a REC to the Property.

## 8.2 DATA GAPS

The federal AAI rule [40 CFR 312.10(a)] and ASTM E1527-13 identify a "data gap" as the lack or inability to obtain information required by the standards and practices of the rule despite good faith efforts by the Environmental Professional or the User.

Any data gaps resulting from the Phase I ESA described in this report are listed and discussed below.

| Gap | Discussion |
|---|---|
| **Deletions or Exceptions From Scope of Work Referenced in Section 1.4:** | None. |
| **Weather-Related Restrictions To Site Reconnaissance:** | None. |
| **Facility Access Restrictions to Site Reconnaissance:** | None. |
| **Other Site Reconnaissance Restrictions:** | None. |
| **Data Gaps From Environmental Records Review:** | None. |
| **Data Gaps From Historical Records Review:** | None. |
| **Data Gaps From Interviews:** | Yes. A completed Owner Questionnaire was not provided by the Property Owner representative to Stantec at the time of submission of this report. During site reconnaissance, the Shift Supervisor, Mr. Reha, accompanied Stantec personnel and provided information to the best of his knowledge. |
| **Other Data Gaps:** | None. |

## 8.3 CONCLUSIONS

Stantec has completed a Phase I ESA report of the property located at 800 Air Way, Glendale, California 91201 (the "Property"), on behalf of City of Glendale Water and Power (the "Client"). The work was performed according to Stantec's proposal and terms and conditions dated September 17, 2015 and accepted by Client on October 1, 2015. City of Glendale Water and Power (the "User") has been designated as the User of this report.

The Phase I ESA was conducted in conformance with the requirements of ASTM Designation E 1527-13, except as may have been modified by the scope of work, and terms and conditions, requested by the Client. Any exceptions to, or deletions from, the ASTM practice are described in Sections 2.3 and 8.2.

As part of a proposed repowering project, the City of Glendale, Department of Water and Power plans to demolish the Grayson Power Plant Boiler Building; replace cooling towers 1 through 5 to more efficient models; and replace the generation units between Cooling Tower 1 and 2, designated as Unit 8A, 8B, and 8C. A majority of the buildings located at the Grayson Power Plant, with the exception of Unit 9, a simple

cycle peaking plant built in 2003, were completed in or before 1977 and have reached their useful life and need to be replaced with more reliable, efficient, and cleaner units. The repowering of the plant is necessary to meet current and future load as well as supporting the renewable power generation that the City of Glendale is either building or buying. The City of Glendale Department of Water and Power is proposing to replace all the existing generation facilities and their related infrastructure, with the exception of Unit 9, by removing all existing above ground and underground equipment and facilities and building new generation facilities.

The Property consists of approximately 12.40 acres and reportedly operated as a power plant since 1934, prior to which it was reportedly vacant and undeveloped land. Surrounding properties are a mix of commercial and industrial properties. The Property is also reportedly identified as 5750 San Fernando Road and 634 Bekins Way.

The following items of note were identified during this ESA:

- The Property reportedly operated as an electric power plant since 1934;
- A Reverse Osmosis Unit to purify water to be used in the boiler system was observed on the Property during the site reconnaissance. Two sumps are located adjacent to the unit;
- Six air compressors were present on the Property; and
- An aboveground ammonia tank (quantity unknown) and a 1500-gallon sodium hypochlorite tank were also observed on the Property for purification of reclaimed water.

We have performed a Phase I Environmental Site Assessment in conformance with the scope and limitations of ASTM Practice E1527 of the Property. Any exceptions to, or deletions from, this practice are described in Sections 2.3 and 8.2 of this report. This assessment has revealed the following RECs in connection with the Property:

- Historical and current presence of three chemical storage areas which stored numerous petroleum hydrocarbons and hazardous chemicals in varying quantities;
- Existence of five cooling towers on the Property since the 1940's;
- Presence of six boilers on the Property;
- Presence of numerous 55-gallon drums and barrels containing lube oil storage in the basement of the Boiler room building. Lube oil for pumps, turbines and air compressors; and synthetic jet engine oil was observed. Most drums were stored on secondary containment which was placed on concrete floor. No spills/leaks were observed;
- Presence of at least seven fuel oil underground storage tanks (USTs) on the Property;
- Presence of former fuel oil and chemical containing aboveground storage tanks (ASTs);
- Historical and current storage of polychlorinated biphenyl (PCB) containing pad and pole mounted transformers on the Property;
- Historical use of a nearby property (1310 Air Way) as an airport; and
- Historical use of adjacent properties as gas stations.

# 9.0 NON-SCOPE CONSIDERATIONS

No ASTM E1527-13 non-scope services were performed as part of this Phase I ESA with the following exceptions:

## 9.1 LEAD-BASED PAINT

Concern for lead-based paint (LBP) is primarily related to residential structures. The EPA's Final Rule on Disclosure of Lead-Based Paint in Housing (40 CFR Part 745) defines LBP as paint or other surface coatings that contain lead equal to or in excess of 1.0 milligram per square centimeter or 0.5 percent by weight.

The risk of lead toxicity in LBP varies based upon the condition of the paint and the year of its application. The U.S. Department of Housing and Urban Development (HUD) has identified the following risk factors:

- The age of the dwelling as follows: maximum risk is from paint applied before 1950.
- There is severe risk from paint applied before 1960.
- There is moderate risk from deteriorated paint applied before 1970.
- There is slight risk from the paint that is intact but applied before 1977.
- The condition of the painted surfaces.
- The presence of children and certain types of households in the building.
- Previously reported cases of lead poisoning in the building or area.

| Construction Date | Residential (Yes/No) | Observed Condition of Painted Surfaces |
|---|---|---|
| 1941 (reported) | No | Due to the age of the building, further assessment of LBP issues was considered warranted in support of Property renovation. Samples of suspect LBP were collected for laboratory analysis of lead and will be submitted to the Client in a separate report. |

## 9.2 ASBESTOS

Asbestos can be found in many applications, including sprayed-on or blanket-type insulation, pipe wraps, mastics, floor and ceiling tiles, wallboard, mortar, roofing materials, and a variety of other materials commonly used in construction. The greatest asbestos-related human health risks are associated with friable asbestos, which is ACM that can be reduced to powder by hand pressure. Friable asbestos can become airborne and be inhaled, and has been associated with specific types of respiratory disease. The manufacturing and use of asbestos in most building products was curtailed during the late 1970s. Stantec makes no warranty as to the possible existence or absence of inaccessible materials or to their evaluation with respect to asbestos content.

Samples of suspect ACM were collected for laboratory analysis of asbestos and will be submitted to the Client in a separate report.

## 9.3 INDOOR AIR QUALITY

No issues regarding air quality were noted during site reconnaissance.

## 9.4 RADON

Radon is a colorless, tasteless radioactive gas with an EPA-specified action level of 4.0 PicoCuries per liter of air (pCi/L) for residential properties. Radon gas has a very short half-life of 3.8 days. The health risk potential of radon is primarily associated with its rate of accumulation within confined areas near or in the ground, such as basements, where vapors can readily transfer to indoor air from the ground through foundation cracks or other pathways. Large, adequately ventilated rooms generally present limited risk for radon exposure. The radon concentrations in buildings and homes depend on many factors, including soil types, temperature, barometric pressure, and building construction (EPA, 1993).

Stantec reviewed regional data published by the EPA (http://www.epa.gov/radon/zonemap.html) on average indoor radon concentrations in the vicinity of the Property.

| **EPA Radon Zones (w/Average Measured Indoor Radon concentrations)** | | |
|---|---|---|
| Zone 1 – High (>4.0 pCi/L) | Zone 2 – Moderate (2 to 4 pCi/L) | Zone 3 – Low (<2 pCi/L) |
| | | |
| **Normally-occupied sub grade areas (i.e. basement apartments, offices, stores, etc.)?** | | |
| The Property consists of a six story building with one basement and one mezzanine floor used for storing steam turbines, and variable sized drums containing waste oil, fuel oil. | | |

The Property is located in Zone 2 and is considered to have moderate potential for radon. To determine Property-specific radon levels a radon survey would have to be conducted.

## 9.5 FLOOD ZONES

According to the Physical Setting summary portion of the EDR report, the Property is not located within a 500-year or 100-year flood plain. The nearest Surface Water is the Los Angeles River, located west of the Property.

## 9.6 WETLANDS

Wetlands cannot be definitively identified through visual observation alone. Defensible wetland delineations require taxonomic classification of property vegetation, an investigation into the surface and subsurface hydrology of the property, and identification of hydric soils. This level of delineation is outside of the scope or work for this assessment. However, EDR database reported wetland area to the west of the Property, adjacent to the Los Angeles River. Information from these sources is summarized below.

| | |
|---|---|
| **Potential Wetlands Observed on Property:** | None Observed |
| **New Development Planned for Property:** | Yes |

### Wetland Inventory Maps

| | |
|---|---|
| **Map Quadrangle Name** | Burbank |
| **Wetlands Depicted on Property:** | None depicted |
| **Wetlands Depicted on Adjoining Properties** | Yes |

### Soil Survey Data

| | |
|---|---|
| **Soil Survey Report Name and Date:** | STATSGO: State Soil Geographic Database |
| **Hydric Soils Depicted in Property Vicinity:** | None Depicted |

Based on the above documents and the field observations, a wetland does not appear to be present at the Property but is present adjacent to the Property.

## 9.7 PESTICIDES

No documentation of commercial on-site use of agricultural chemicals (e.g., pesticides, insecticides, fertilizers or herbicides) was discovered during this ESA. Stantec did not identify any apparent agricultural chemical processing areas, such as crop dusting airfields, bulk mixing areas; or repacking, transfer, or agricultural chemical storage areas in the aerial photographs that were reviewed during this ESA.

## 9.8 DRY-CLEANING OPERATIONS

No existing dry-cleaning operations were observed at the Property. The historical records review did not list former dry-cleaning operations on the Property.

# 10.0 REFERENCES

American Society for Testing and Materials, Standard Practice for Environmental Site Assessments: Phase 1 Environmental Site Assessment Process, Designation: E 1527-13, November 2013.

American Society for Testing and Materials (ASTM), 2010, Standard Guide for Vapor Encroachment Screening on Property Involved in Real Estate Transactions, Designation E 2600-10, June 1.

Brown and Caldwell, 1993-1996, Site Quarterly Report – Grayson Power Plant.

California Department of Conservation Division of Mines and Geology (CDCDMG), 1986, Geomorphic Provinces and Some Principal Faults of California, May.

California Department of Health Services (DHS), 1990, California Statewide Radon Survey, May.

California Department of Water Resources (DWR), 2004, California's Groundwater Bulletin 118, South Coast Hydrologic Region, Coastal Plain of Los Angeles Groundwater Basin, Central Subbasin, updated February 24.

California Regional Water Quality Control Board -Los Angeles Region, 1991, Background Memo, January 18.

California Regional Water Quality Control Board -Los Angeles Region, 1990 – 1997, Chemical Storage Questionnaire.

California Regional Water Quality Control Board -Los Angeles Region, 2010, Response to Technical Report Pursuant to California Water Code Section 13267 Order for Grayson Power Plant, June 30.

Converse Consultants , 2010, Technical Report on Soil and Groundwater Site Assessment of Metals including Hexavalent Chromium at Grayson Power Plant, March 10.

Department of Toxic Substances Control, 1984, Preliminary Assessment Summary – Grayson Power Plant, May.

ENSR Corporation, 1990, Grayson Power Plant, Leak Detection and Tank Monitoring Report, March.

Fugro Consultants, 1994, Environmental Audit – City of Glendale Grayson Power Plant, January 28.

Fugro Consultants, 1994, Addendum to Subsurface Soils and Hydrogeologic Investigation Grayson Power Plant, June.

U.S. Environmental Protection Agency (EPA), 2005, All Appropriate Inquiry Final Rule

U. S. Environmental Protection Agency (EPA), 1993, USEPA Map of Radon Zones Throughout United States, Document No. EPA-402-R-93-071Prior reports

**Websites:**

http://www.cdph.ca.gov/healthinfo/environhealth/Documents/Radon/CaliforniaRadonDatabase.pdf

http://www.dfg.ca.gov/bdb/html/cnddb.html

http://www.dtsc.ca.gov/HazardousWaste/Deeds/Shipley.cfm

REFERENCES
July 14, 2016

http://www.epa.gov/enviro/

http://GeoTracker.swrcb.ca.gov/

http://hwts.dtsc.ca.gov/report_list.cfm

http://www.maps.assessor.laccounty.gov/mapping/vieer.asp

http://maps.conservation.ca.gov/doms/doms-app.html

http://www.nrc.uscg.mil/pls/htmldb/f?p=109:1:587700253356660

http://www.water.ca.gov/groundwater/bulletin118/gwbasin_maps_description.cfm

# FIGURES

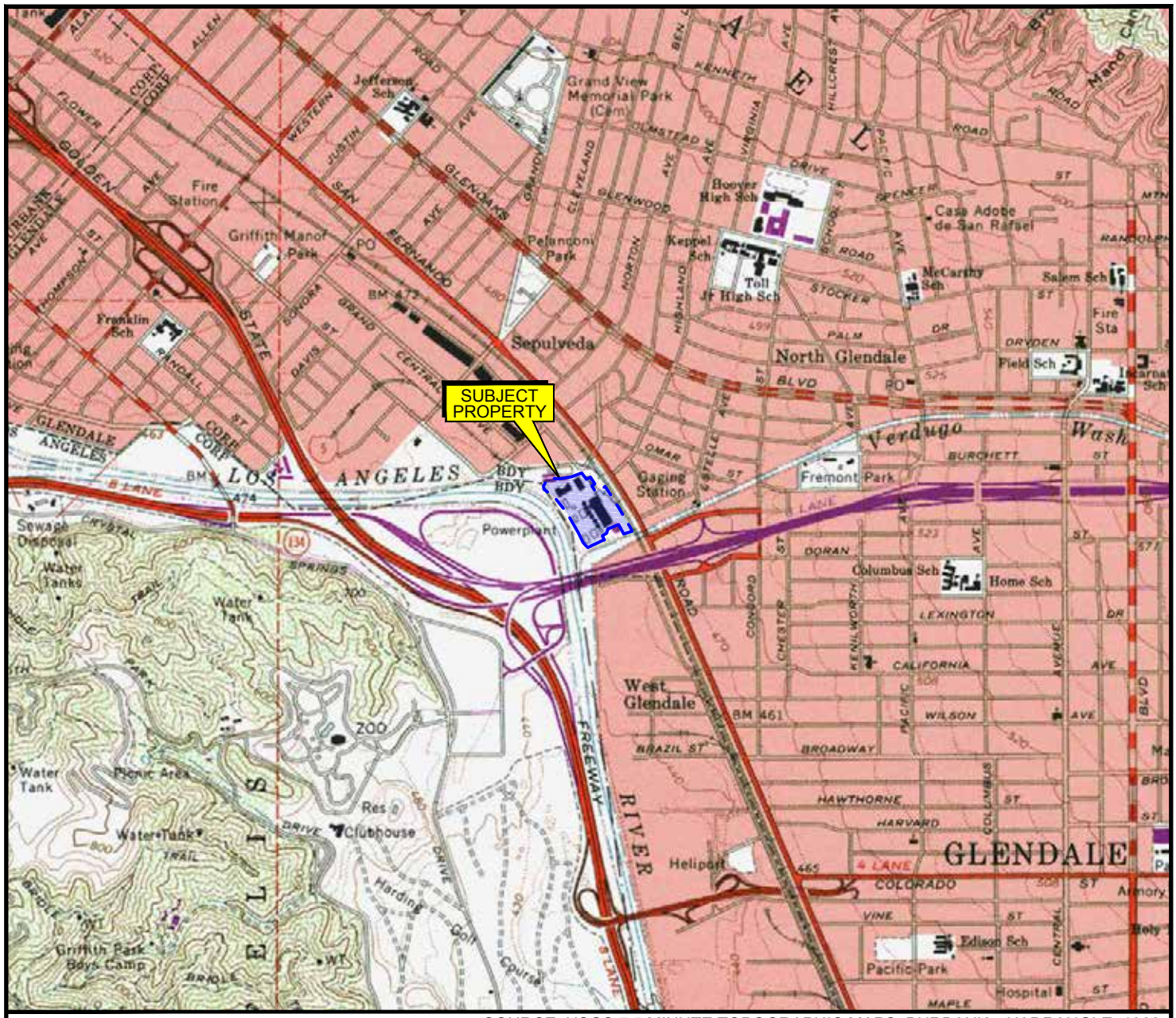


SOURCE: USGS 7.5 MINUTE TOPOGRAPHIC MAPS, BURBANK QUADRANGLE, 1966
PHOTOREVISED, 1994

N

0 2000 4000

APPROXIMATE SCALE (FEET)

Stantec
290 Conejo Ridge Avenue
Thousand Oaks, CA 91361
PHONE: (805) 230-1266 FAX: (805) 230-1277

| FOR: | | | FIGURE: |
|---|---|---|---|
| Grayson Power Plant<br>Phase 1 ESA<br>800 Air Way<br>Signal Hill, CA 90755 | | SITE LOCATION MAP | 1 |
| JOB NUMBER: 2057123300.M800-5G | DRAWN BY: R. Roman | CHECKED BY: A. Sawant | APPROVED BY: C. Haase | DATE: 12/17/15 |

FILEPATH:E:\2057\active\2057123300\05_report\deliv\cad\figures\20151217_pho_gpp_esa.dwg TRoman Dec 18, 2015 at 11:08 Layout: F1

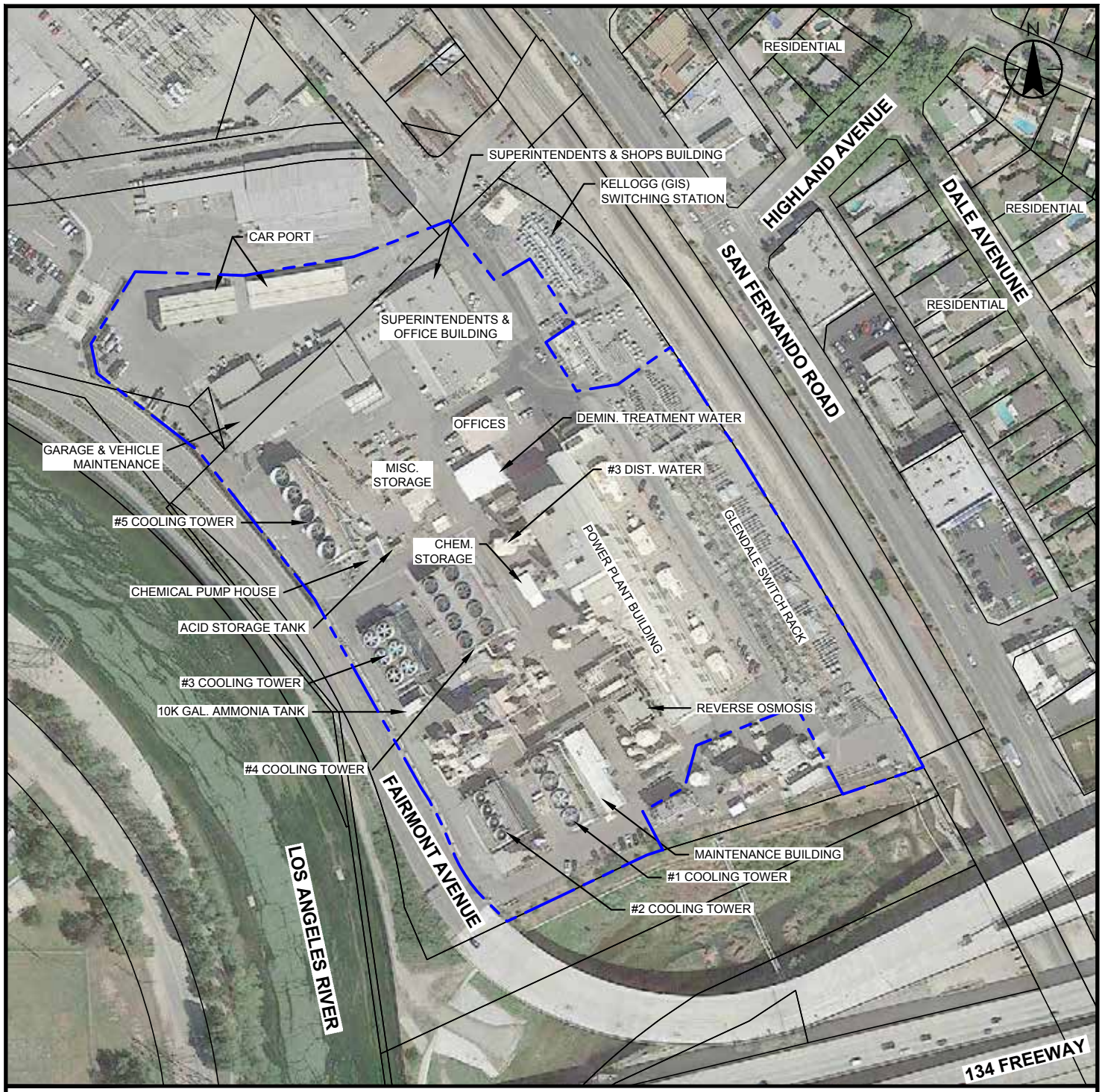


## LEGEND

APPROXIMATE SUBJECT PROPERTY LINE

## NOTES:

1. MAP REFERENCES; GOOGLE EARTH PRO AERIAL IMAGE, DATED APRIL 23, 2014. GLENDALE WATER AND POWER, FACILITIES SITE PLAN, SHEET NO. 1, 6095-A, DATED SEPTEMBER 11, 2008.
2. COORDINATE SYSTEM; NAD 83 CALIFORNIA STATE PLANES, ZONE 5 (FT.). NOT A SURVEYED MAP, SITE FEATURES AND LOCATIONS ARE APPROXIMATE.

0 200 400

APPROXIMATE SCALE (FEET)

Stantec
290 Conejo Ridge Avenue
Thousand Oaks, CA 91361
PHONE: (805) 230-1266 FAX: (805) 230-1277

FOR:
Grayson Power Plant
Phase 1 ESA
800 Air Way
Signal Hill, CA 90755

SITE VICINICTY MAP

FIGURE: 2

| JOB NUMBER: | DRAWN BY: | CHECKED BY: | APPROVED BY: | DATE: |
|---|---|---|---|---|
| 2057123300.M800-5G | R. Roman | A. Sawant | C. Haase | 12/17/15 |

FILEPATH:E:\2057\active\2057123300\05_report\deliv\cad\figures\20151217_pho_gpp_esa.dwg TRoman Dec 18, 2015 at 11:10 Layout: F2

# Appendix A
# PHOTOGRAPHS OF THE PROPERTY AND VICINITY

# STANTEC CONSULTING
# PHOTOGRAPHIC RECORD

| | | | |
|---|---|---|---|
| **Client:** | City of Glendale Water and Power | **Job Number:** | 2057123300 |
| **Subject Name:** | Grayson Power Plant | **Location:** | 800 Air Way, Glendale, CA 91201 |
| **Photographer:** | A. Sawant | **Date:** | 12-Oct-2015 |

**Photograph No. 1**

View of the boiler feed pump located in the basement in the Power plant building

**Photograph No. 2**

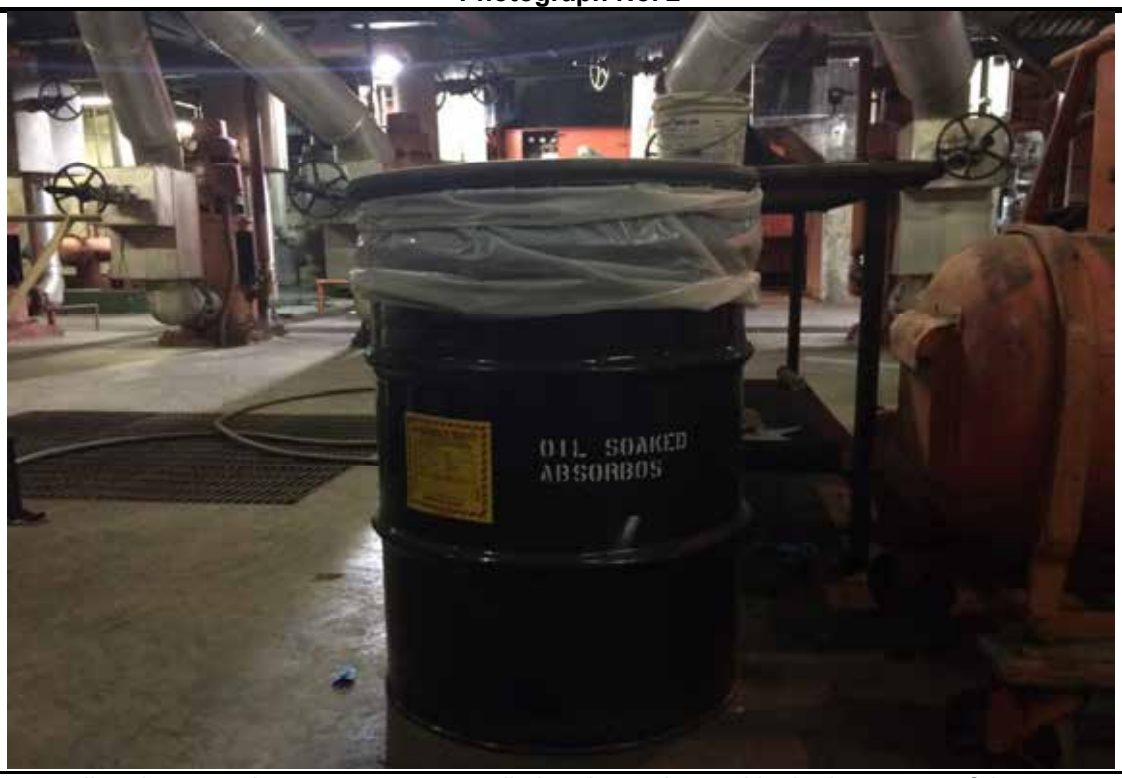


View of the 55-gallon drum used to temporary store oil absorbers - located in the basement of the power palnt building

# STANTEC CONSULTING
# PHOTOGRAPHIC RECORD

| | | | |
|---|---|---|---|
| **Client:** | City of Glendale Water and Power | **Job Number:** | 2057123300 |
| **Subject Name:** | Grayson Power Plant | **Location:** | 800 Air Way, Glendale, CA 91201 |
| **Photographer:** | A. Sawant | **Date:** | 12-Oct-2015 |

**Photograph No. 3**

View of the storage room located on mezzanine floor - power plant building

**Photograph No. 4**

View of room on the mezzanine floor - power plant building

# STANTEC CONSULTING
# PHOTOGRAPHIC RECORD

| | | | |
|---|---|---|---|
| **Client:** | City of Glendale Water and Power | **Job Number:** | 2057123300 |
| **Subject Name:** | Grayson Power Plant | **Location:** | 800 Air Way, Glendale, CA 91201 |
| **Photographer:** | A. Sawant | **Date:** | 12-Oct-2015 |

**Photograph No. 5**

View of Floor 1 - power plant building

**Photograph No. 6**

View of the cyclops crance located on the exterior of power plant building and can be accessed from Floor 1 of the

# STANTEC CONSULTING
# PHOTOGRAPHIC RECORD

| | | | |
|---|---|---|---|
| **Client:** | City of Glendale Water and Power | **Job Number:** | 2057123300 |
| **Subject Name:** | Grayson Power Plant | **Location:** | 800 Air Way, Glendale, CA 91201 |
| **Photographer:** | A. Sawant | **Date:** | 12-Oct-2015 |

**Photograph No. 7**

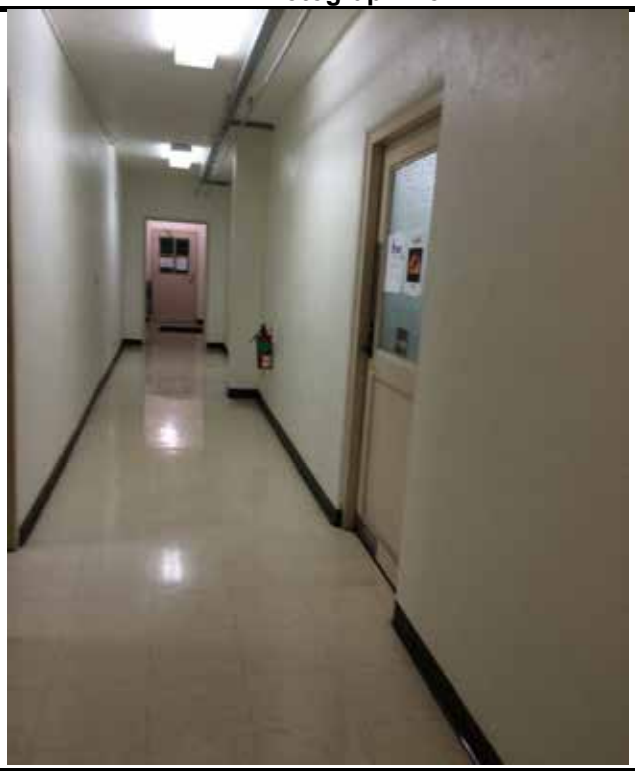

View of Floor 2 of the power plant building - office space

**Photograph No. 8**

View of the laboratory located on Floor 3 - power plant building

# STANTEC CONSULTING
# PHOTOGRAPHIC RECORD

| | | | |
|---|---|---|---|
| **Client:** | City of Glendale Water and Power | **Job Number:** | 2057123300 |
| **Subject Name:** | Grayson Power Plant | **Location:** | 800 Air Way, Glendale, CA 91201 |
| **Photographer:** | A. Sawant | **Date:** | 12-Oct-2015 |

**Photograph No. 9**

View of the soot blower located on various floors throughout the power plant building.

**Photograph No. 10**

View of the access to the boilers - access provided on Floor 4, 5 and 6 of the power plant building.

# STANTEC CONSULTING
# PHOTOGRAPHIC RECORD

| | | | |
|---|---|---|---|
| **Client:** | City of Glendale Water and Power | **Job Number:** | 2057123300 |
| **Subject Name:** | Grayson Power Plant | **Location:** | 800 Air Way, Glendale, CA 91201 |
| **Photographer:** | A. Sawant | **Date:** | 12-Oct-2015 |

**Photograph No. 11**

View from the power plant building to the access to the generation units

**Photograph No. 12**

View of the deaeration tnak system - floor 5 of the power plant building

# STANTEC CONSULTING
# PHOTOGRAPHIC RECORD

| | | | |
|---|---|---|---|
| **Client:** | City of Glendale Water and Power | **Job Number:** | 2057123300 |
| **Subject Name:** | Grayson Power Plant | **Location:** | 800 Air Way, Glendale, CA 91201 |
| **Photographer:** | A. Sawant | **Date:** | 12-Oct-2015 |

**Photograph No. 13**

View of one of the chemical storage areas and an outler to an underground storage tank.

**Photograph No. 14**

View of Cooling Tower 1

# STANTEC CONSULTING
# PHOTOGRAPHIC RECORD

| | | | |
|---|---|---|---|
| **Client:** | City of Glendale Water and Power | **Job Number:** | 2057123300 |
| **Subject Name:** | Grayson Power Plant | **Location:** | 800 Air Way, Glendale, CA 91201 |
| **Photographer:** | A. Sawant | **Date:** | 12-Oct-2015 |

**Photograph No. 15**

View of the Sodium hypochlorite aboveground tank located adjacent to one of the cooling towers.

**Photograph No. 16**

View of the generation unit located in the southern portion of the Property.

# STANTEC CONSULTING
# PHOTOGRAPHIC RECORD

| | | | |
|---|---|---|---|
| **Client:** | City of Glendale Water and Power | **Job Number:** | 2057123300 |
| **Subject Name:** | Grayson Power Plant | **Location:** | 800 Air Way, Glendale, CA 91201 |
| **Photographer:** | A. Sawant | **Date:** | 12-Oct-2015 |

**Photograph No. 17**

View of the Demineralized tank located on the Property.

**Photograph No. 18**

View of a syntheic jet engine oil storage drum with secondary containment located on the Property.

# STANTEC CONSULTING
# PHOTOGRAPHIC RECORD

| | | | |
|---|---|---|---|
| **Client:** | City of Glendale Water and Power | **Job Number:** | 2057123300 |
| **Subject Name:** | Grayson Power Plant | **Location:** | 800 Air Way, Glendale, CA 91201 |
| **Photographer:** | A. Sawant | **Date:** | 12-Oct-2015 |

**Photograph No. 19**

View of the chemical storage area - note the 55-gallon drums placed on secondary containment

**Photograph No. 20**

View of the chemical storage area - note the 55-gallon drum and 5-gallon buckets placed on secondary containment

# STANTEC CONSULTING
# PHOTOGRAPHIC RECORD

| | | | |
|---|---|---|---|
| **Client:** | City of Glendale Water and Power | **Job Number:** | 2057123300 |
| **Subject Name:** | Grayson Power Plant | **Location:** | 800 Air Way, Glendale, CA 91201 |
| **Photographer:** | A. Sawant | **Date:** | 12-Oct-2015 |

**Photograph No. 21**

View of the transformers (pole mount type) located on the east portion of the Property

**Photograph No. 22**

View of the transformers (pad mount type) located on the east portion of the Property

# STANTEC CONSULTING
# PHOTOGRAPHIC RECORD

| | | | |
|---|---|---|---|
| **Client:** | City of Glendale Water and Power | **Job Number:** | 2057123300 |
| **Subject Name:** | Grayson Power Plant | **Location:** | 800 Air Way, Glendale, CA 91201 |
| **Photographer:** | A. Sawant | **Date:** | 12-Oct-2015 |

**Photograph No. 23**

View of the Property vicinity - 134 Freeway located south of the Property

# Appendix B
# STANTEC RESUMES

# Anuya Sawant

Engineering Project Specialist

Anuya has four years of experience in the environmental industry, including project and task management; environmental site assessments; hazardous material assessments; remedial investigations; remedial evaluations and installations; soil, soil vapor, and air sampling; water sampling (wastewater, groundwater, and surface water); National Environmental Policy Act (NEPA)/California Environmental Quality Act (CEQA); Phase I and Phase II environmental assessment and remediations; and workplans, proposals, and reports. Her remediation background includes operating soil vapor extraction (SVE) with granular activated carbon; thermal catalytic oxidizer; and ozone sparge systems designed to target petroleum hydrocarbon and volatile organic compound impacts to groundwater, subsurface soil, and soil vapor. Anuya's site assessment background includes drilling, well abandonment and redevelopment, soil and water sampling, soil vapor sampling and indoor air/intrusion (Summa canisters and tedlars), excavations, underground storage tank (UST) removals, and installing groundwater and soil vapor wells. Her regulatory compliance and NEPA/CEQA document preparation includes evaluating air quality, greenhouse gas emissions, traffic/transportation, energy, utilities, and recreational project impacts. Anuya has technical knowledge of quantifying emissions for linear (i.e. pipelines and roadways) projects using CalEEMod emission model, as well as the USEPA statistical analysis software, ProUCL that is used to compute rigorous statistics to help make accurate decisions at a polluted site.

## EDUCATION

BS, Civil Engineering, University of Mumbai, Mumbai, India, 2008

BS, Environmental Engineering, Old Dominion University, Norfolk, Virginia, 2010

OSHA 40-Hour Health & Safety Certification HAZWOPER Standard 29 CFR 1910.120(e), Philadelphia, Pennsylvania, 2010

OSHA 8-Hour Supervisor Health & Safety Certification HAZWOPER Standard, 29 CFR 1910.120, Thousand Oaks, California, 2011

CPR/AED/First Aid, Thousand Oaks, California, 2012

OSHA 8-Hour Refresher Course Health & Safety Certification HAZWOPER Standard, 29 CFR 1910.120, Thousand Oaks, California, 2014

CPR/AED/First Aid Refresher Course, Thousand Oaks, California, 2013

## MEMBERSHIPS

Member, American Society of Civil Engineers

## PROJECT EXPERIENCE

**Environmental Site Assessments Phase I, II, III**

Limited Visual Site Investigation, Phase I and II Environmental Site Assessments, Los Angeles, Riverside, Orange, and Ventura Counties, California (Project Engineer)

*Anuya performed a limited visual site investigation, Phase I and II Environmental Site Assessments and site characterization assessments for several clients, including medical groups, major retail tire facilities, residential developers, commercial developers, and banks. Properties included multi-story occupied and vacant buildings, vacant lots, industrial and residential properties, and automotive maintenance facilities.*

**Environmental Site Remediation**

Soil, Soil Vapor, and Groundwater Remediation, Los Angeles and Orange Counties, CA (Project Engineer)

*Anuya helped with permitting and operation and maintenance of soil vapor extraction, air sparge, and ozone injection systems to remediate impacted soil, soil vapor, and groundwater for property development companies (commercial) and an Orange County city. Sites included volatile organic compounds, chlorinated solvents, and hydrocarbon impacts.*

** denotes projects completed with other firms*

# Anuya Sawant

Engineering Project Specialist

Soil, Soil Vapor, and Groundwater Remediation Systems Operations and Maintenance, Los Angeles and Orange Counties, CA (Staff Engineer)
*Anuya conducted operation and maintenance activities on soil vapor extraction and ozone injection systems. She conducted daily/weekly field monitoring, air sampling, and monthly data collection to maintain air quality permits compliance.*

California Department of Transportation (Caltrans), Los Angeles and Ventura Counties, California (Project Engineer)
*Anuya performed soil sampling at various locations, including Lebec and Ojai maintenance yards and I-101 freeway in Ventura and Los Angeles Counties. She evaluated the soil for total petroleum hydrocarbons, volatile organic compounds, and metals.*

Former Retail Petroleum Station Assessment and Remediation, Yorba Linda, California (Staff Engineer)
*Anuya is currently helping manage permitting, installation, and operation and maintenance of a soil vapor extraction and ozone sparge remediation system to redevelop a former retail petroleum station. The site is impacted with petroleum hydrocarbons and volatile organic compounds in subsurface soils, soil vapor, and groundwater. She is documenting weekly operation and maintaining thermal catalytic oxidizer granular activated carbon SVE and ozone sparge remediation system; permitting (City of Yorba Linda, WDR, and Air Quality Management District); collecting monthly soil vapor samples; collecting quarterly groundwater samples; and preparing quarterly groundwater and operation and maintenance reports and yearly progress reports submitted to the Orange County Health Care Agency and the City of Yorba Linda.*

Soil and Soil Vapor Remediation, Harbor City, California (Staff Engineer)
*Anuya conducted weekly operation and maintenance of the soil vapor extraction system and collected soil vapor samples at a dry cleaner facility. The site consisted of volatile organic compounds, chlorinated solvents, and hydrocarbon-impacted properties. Anuya prepared quarterly operation and maintenance reports.*

Target Store Assessment and Remediation, Anaheim, California (Staff Engineer)
*Anuya helped technically execute the remediation of a multi-million dollar project at a former Target Store facility. Source areas included an automotive service station and dry cleaner business that formerly operated at the property. Remediation activities included underground storage tank removal, soil excavation, and soil vapor extraction. Anuya composed quarterly groundwater and operation and maintenance reports; conducted weekly/daily operation and maintenance of the soil vapor extraction system with carbon vessels; and collected soil vapor samples monthly. This site received a no further action letter and was closed by the lead regulatory agency.*

**Oil & Gas**

Vinvale Terminal Groundwater Monitoring and Remediation, Southgate, California (Project Engineer)
*The project site is one of the largest fueling distribution terminals on the west coast with daily simultaneous operations. Anuya participates in the groundwater monitoring and sampling activities on a quarterly basis.*

Positional Letter Report, Tesoro (Former BP ARCO) Line 216, Inglewood, California (Project Engineer)
*Anuya helped prepare a Positional Letter Report that recommended an approach, strategy, and response to a letter issued by the Los Angeles Regional Water Quality Control Board. The letter addressed environmental conditions reportedly identified along the Natural Gas Pipeline 216, located on Hollywood Park Racecourse in Inglewood, California.*

Air Quality Study, Vintage Development Project, Kern County, California (Project Engineer)
*Anuya helped prepare a Positional Letter Report that recommended an approach, strategy, and response to a letter issued by the Los Angeles Regional Water Quality Control Board. The letter addressed environmental conditions reportedly identified along the Natural Gas Pipeline 216, located on Hollywood Park Racecourse in Inglewood, California.*

** denotes projects completed with other firms*

# Anuya Sawant

Engineering Project Specialist

Tesoro (Former BP ARCO) Gas Station Workplan Reports (Project Engineer)

*Anuya prepared workplans and well abandonment reports for various gas station sites to expedite the remediation process and proceed towards closure.*

Underground Storage Tank Removal, Tesoro Refining and Marketing, Marina Del Ray, Newbury Park, Long Beach, and Santa Barbara, California (Staff Engineer)

*Anuya provided technical support and field support to remove and excavate an underground storage tanks at various Tesoro service stations in Marina Del Rey, Newbury Park, Long Beach, and Santa Barbara. The project removed the tank, monitored air quality in accordance with Rule 1166 Air Monitoring, collected a soil sample during UST removal/upgrades, segregated impacted soil, and backfilled the excavation pit.*

**Baseline Studies**

Chevron-Branded Facility, Bakersfield, California (Project Engineer)

*Anuya prepared a Baseline Site Summary Report for a Chevron-Branded Facility. She prepared the summary in accordance with established Chevron Environmental Management Company (CEMC) guidelines for Property Transfer: Health, Environmental, and Safety Due Diligence Guidelines for Property Transfer for Service Stations.*

Occidental of Elk Hills Carbon Dioxide Enhanced Oil Recovery and Sequestration Project, Kern Counties, California (Engineering Associate)

*Anuya helped repair an equivalent document to an Environmental Impact Report with several technical studies to construct and operate a carbon dioxide ($CO_2$) enhanced oil recovery (EOR) system at a 48,000-acre active oil field. The environmental document met the content and format requirements of the California Energy Commission, Department of Oil Gas and Geothermal Resources; and Kern County Planning and Community Development Department. Anuya evaluated potential environmental impacts created by the construction and operation of the $CO_2$ EOR system (specifically for population), and if warranted, provided mitigation measures to address identified impacts.*

**Multi-Unit / Family Residential**

ProUCL software for statistical calculations and analysis to support Expert Report, Los Angeles, California (Project Engineer)

*As part of statistical calculations, Anuya evaluated the analytical data to establish the type of distributional assumptions that best fit the data. To make this determination, Anuya utilized the ProUCL 5.0 software program provided by the USEPA and provided the upper confidence limit of the mean to help determine contribution of the site and the neighboring site to toxic metals contamination. The program allowed normality or lognormality data testing using the Shapiro-Wilk W test.*

** denotes projects completed with other firms*

# Scott E. Edblad CPESC, CESSWI, QSD/QSP, CSST, LRCST

Associate Scientist

Scott has over 11 years of environmental consulting experience throughout the US Southwest, including Arizona, Hawaii, and New Mexico. He specializes in environmental consulting services for commercial and industrial clients. The service areas in which he focuses include storm water management/compliance, property transaction due diligence, environmental site assessments, hazardous materials assessments, subsurface investigations, remedial investigations, and regulatory compliance. Scott has managed numerous Phase I ESAs, subsurface investigations, and hazardous material assessments on properties ranging from small commercial facilities to large operating oil fields. He has also participated on CEQA regulated projects and biological surveys. Scott has conducted health and safety oversight in extreme cold weather conditions, as part of an incident command team, during an emergency oil spill response in North Dakota.

Scott is a Certified Professional in Erosion and Sediment Control (CPESC); a Certified Erosion, Sediment and Storm Water Inspector (CESSWI); and a Qualified SWPPP Developer (QSD) / Qualified SWPPP Practitioner (QSP) with storm water quality experience on projects throughout Southern California. In addition, Scott is a Certified Site Surveillance Technician (CSST) and Lead Related Construction Sampling Technician (LRCST) with asbestos and lead assessment experience on projects in Arizona, California, and New Mexico.

## EDUCATION

BS, Soil Science, California Polytechnic State University, San Luis Obispo, California, 2002

## CERTIFICATIONS & TRAINING

40-Hour Health & Safety Certification (HAZWOPER Standard 29 CFR 1910.120), Allan Hancock College, Santa Maria, California, 2000

Initial Training, Adult CPR, San Luis Obispo, California, 2003

8-Hour OSHA Supervisor Training Certificatioin, Thousand Oaks, California, 2004

8-Hour OSHA Confined Space Entry, Thousand Oaks, California, 2004

South Coast Air Basin Fugitive Dust Control Class SC05-02-1537, Diamond Bar, California, 2005

Hydrogen Sulfide Awareness for Exposures in Oil & Gas Production Fields and Industrial Facilities, Camarillo, California, 2006

8-Hour Competent Person Training in Trench and Excavation Safety, Santa Maria, California, 2007

Blunt-Nosed Leopard Lizard (BNLL) Level II Researcher, California Department of Fish and Game-San Joaquin Valley Southern Sierra Region, San Joaquin Valley, California, 2012

Asbestos Building Inspector Refresher #CA-015-06, State of California Division of Occupational Safety and Health, Anaheim, California, 2013

Asbestos Contractor/Supervisor Refresher #CA-015-04, State of California Division of Occupational Safety and Health, Anaheim, California, 2014

8-Hour OSHA HAZWOPER Refresher (29 CFR 1910.120), (puresafetysupport@support.ul.com), Thousand Oaks, California, 2014

API Work Safe Training, Key #37143746, Thousand Oaks, California, 2014

DOT/Hazmat Employee with Packaging Course, 49 CFR 172.704, DOT HM-181 and HM-232, Thousand Oaks, California, 2014

Title 22 California-Hazardous Waste Generator, Title 22 66256.16, Thousand Oaks, California, 2014

Scissor and Boom Lift Occupational Safety and Health Administration Certification and Operation, Canoga Park, California, 2014

** denotes projects completed with other firms*

# Scott E. Edblad CPESC, CESSWI, QSD/QSP, CSST, LRCST

Associate Scientist

CPR/AED - Adult, American Red Cross, Thousand Oaks, California, 2013

## REGISTRATIONS

Site Surveillance Technician #13-5159, State of California Division of Occupational Safety and Health

Lead Related Construction Sampling Technician #26434, California Department of Public Health

Qualified Stormwater Pollution Prevention Plan Practitioner (QSP) #24260, California Stormwater Quality Association

Qualified Stormwater Pollution Prevention Plan Developer (QSD) #24260, California Stormwater Quality Association

Certified Erosion, Sediment and Storm Water Inspector #3272, EnviroCert International, Inc.

Certified Professional in Erosion and Sediment Control #6930, EnviroCert International, Inc.

Asbestos Building Inspector #CA-015-06, State of California Division of Occupational Safety and Health

Asbestos Contractor/Supervisor #CA15-04, State of California Division of Occupational Safety and Health

## AWARDS

2005 Innovation Award, Kerr-McGee Rancho San Francisco Incentive Agreement, ENSR International

2002 Logan Carter Award, Cal Poly San Luis Obispo

## PROJECT EXPERIENCE

**Biological Monitoring**

Elk Hills Oil Field Blunt-Nosed Leopard Lizard (BNLL) Surveys, Kern County, California (Associate Scientist)

*Scott conducted Blunt-Nosed Leopard Lizard (BNLL) surveys (under protocol developed by the San Joaquin Valley Southern Sierra Region [SJVSSR] of the California Department of Fish and Game [DFG] with input from the United States Fish and Wildlife Service, the Bureau of Land Management and various species experts) on several sections of the Elk Hills Oil Field in an unincorporated area of Kern County, California. Scott obtained the status of Level II Researcher by demonstrating the ability to distinguish BNLL from other common lizard species that may inhabit the area (with at least one confirmed field sighting as defined by the DFG and submission to the California Natural Diversity Database) and participating in at least 50 survey days for BNLL. These surveys also included the identification and GPS mapping of other protected, endangered, or animal species associated with BNLL habitat.*

**Emergency Planning / Response**

Emergency Oil Spill Response, Bakken Field, McKenzie County, North Dakota (Associate Scientist)

*Scott conducted health and safety oversight, as part of an incident command team, during an emergency oil spill response in an unincorporated area of McKenzie County, North Dakota. Health and safety oversight included on-site observation of oil impacted snow collection and melt operations in extreme cold weather conditions (temperatures below negative 30 degrees Fahrenheit and wind chill below negative 50 degrees Fahrenheit).*

**Environmental Site Assessments Phase I, II, III**

City of Tustin Phase I and II ESA, Industrial Facility, Tustin, California (Associate Scientist)

*Scott conducted Phase I and II ESAs under the ASTM E1527-05 Standard on a 148,993-square-foot former office building located on 6.5-acres in the City of Tustin. An adjacent property had a DTSC Corrective Action Consent Agreement to address residual contamination left in place. Indoor and outdoor ambient air, soil, and soil vapor samples were collected to evaluate potential subsurface impacts related to the residual contamination left in place. The ESAs were completed as part of the client's environmental due diligence prior to a property transaction.*

** denotes projects completed with other firms*

# Scott E. Edblad CPESC, CESSWI, QSD/QSP, CSST, LRCST

Associate Scientist

Environmental Facility Entrance Assessment (FEA), Commercial Building, La Puente, California (Associate Scientist)
*Scott conducted an FEA under the ASTM E1527-05 Standard on a 4,000-square-foot vacant retail space in a shopping center plaza located in the City of La Puente, in Los Angeles County. The FEA was completed as part of the client's environmental due diligence prior to leasing a property.*

City of Thousand Oaks Phase I ESA, Industrial Facility, Thousand Oaks, California (Associate Scientist)
*Scott conducted a Phase I under the ASTM E1527-05 and E2247-08 (rural property) Standards on 11,431-square-foot vacant commercial building. The ESA was completed as part of the client's environmental due diligence prior to a property transaction.*

Phase I ESA, Undeveloped Land, Hesperia, California (Associate Scientist)
*Scott conducted two Phase I's under the ASTM E1527-05 and E2247-08 (rural property) Standards on approximately 142--acres of undeveloped land that was being utilized as a open space in the city of Hesperia, in San Bernardino County. The ESA was completed as part of the client's environmental due diligence prior to a property transaction.*

City of Ventura Phase I ESA, Undeveloped Land, Ventura, California (Associate Scientist)
*Scott conducted a Phase I under the ASTM E1527-05 and E2247-08 (rural property) Standards on 123 acres of undeveloped land that was being utilized for agriculture located in an unincorporated area of the City of Buenaventura (Ventura). The ESA was completed as part of the client's environmental due diligence prior to a property transaction.*

Environmental Facility Entrance Assessment (FEA), Office Facility, Lancaster, California (Associate Scientist)
*Scott conducted an FEA under the ASTM E1527-05 Standard on an 11,780-square-foot office space on the fourth floor of a four-story hospital building used for medical and administrative purposes. The FEA was completed as part of the client's environmental due diligence prior to leasing a property.*

Phase I ESA, Industrial Facility, North Hollywood, California (Associate Scientist)
*Scott conducted a Phase I under the ASTM E1527-05 Standard on a clinical diagnostic laboratory that consisted of a 120,000 and 100,000-square-foot medical laboratory building located on a Superfund Site. The ESA was completed as part of the client's environmental due diligence prior to a property transaction.*

City of Caliente Phase I ESA, Undeveloped Land, Caliente, California (Associate Scientist)
*Scott conducted a Phase I under the ASTM E1527-05 and E2247-08 (rural property) Standards on 7,300 acres of undeveloped land that was being utilized as a cattle ranch located in the unincorporated town in Kern County. The ESA was completed as part of the client's environmental due diligence prior to a property transaction.*

Phase I ESA,Two Vacant Parcels, Lancaster, California (Associate Scientist)
*Scott conducted a Phase I under the ASTM E1527-05 Standard on two 10-acre vacant parcels of land. The ESA was completed as part of the client's environmental due diligence prior to a property transaction.*

Medical Laboratory Phase I ESA, Portland, Oregon (Associate Scientist)
*Scott conducted a Phase I under the ASTM E1527-05 Standard on a 100,00- square-foot regional medical laboratory. The ESA was completed as part of the client's environmental due diligence prior to a property transaction.*

Phase I ESA, Vacant Land, Sacramento, California (Associate Scientist)
*Scott conducted a Phase I under the ASTM E1527-05 Standard on 12.24-acres of vacant parcels that were partially being utilized as a storage yard for the construction of a hotel. The ESA was completed as part of the client's environmental due diligence prior to a property transaction.*

Phase I ESA, Undeveloped Land, Kapolei, Hawaii (Associate Scientist)
*Scott conducted a Phase I under the ASTM E1527-05 Standard on 5.3 acres of undeveloped land that was partially being utilized as a storage yard for a newly constructed paved road and judiciary complex. The ESA was completed as part of the client's environmental due diligence prior to a property transaction.*

** denotes projects completed with other firms*

# Scott E. Edblad CPESC, CESSWI, QSD/QSP, CSST, LRCST

Associate Scientist

Phase I ESA, Vacant Land, Los Angeles, California (Associate Scientist)

*Scott conducted a Phase I under the ASTM E1527-05 Standard on a 14,500-square-foot vacant parcel that was partially being utilized as a storage yard for the construction of a three-level parking garage. The ESA was completed as part of the client's environmental due diligence prior to a property transaction.*

Phase I ESA, Vacant Land, Sisquoc, California (Associate Scientist)

*Scott conducted a Phase I under the ASTM E1527-05 Standard on a 5.5-acre vacant parcel of land located in an unincorporated area of the City of Santa Maria. The ESA was completed as part of the client's environmental due diligence prior to a property transaction.*

Phase I ESA Update, Manufacturing and Distribution Warehouse, Los Angeles, California (Associate Scientist)

*Scott conducted a Phase I ESA Update under the ASTM E1527-05 Standard on an 82,500-square-foot apparel manufacturing and distribution warehouse. This Phase I ESA Update was completed in conjunction with a prior Phase I and Phase II ESA as part of the owner's environmental due diligence prior to a property transaction.*

Phase I ESA, Industrial Facility, Los Angeles, California (Associate Scientist)

*Scott conducted a Phase I under the ASTM E1527-05 Standard on a 6.2-acre industrial property specializing in the design, engineering, fabricating, and machining of complex, high-precision, close-tolerance parts, assemblies, and tooling for international aerospace, defense, high tech research, and commercial sectors. The facility consisted of 300,000 square feet of temperature and environmentally controlled facilities. The ESA was completed as part of the client's environmental due diligence prior to a property transaction.*

Phase I ESA, Industrial Facility, Oxnard, California (Associate Scientist)

*Scott conducted a Phase I under the ASTM E1527-05 Standard on an industrial property specializing in large scale digital printing. Due to the property transaction timeline constraints, he completed the ESA within a two week time period. The project was completed within the property transaction schedule and on budget. The ESA was completed as part of the client's environmental due diligence prior to a property transaction.*

**Hazardous Materials Management**

Asbestos Surveys, Multiple Sites, United States - Arizona, California, New Mexico (Associate Scientist)

*Scott worked under the direction of a Certified Asbestos Consultant in conducting asbestos surveys on commercial and industrial buildings, including visual inspection for representative homogeneous areas of suspect asbestos-containing materials. This also included collecting bulk samples of suspect asbestos-containing materials and submitting the bulk samples under chain of custody to certified laboratories for analysis.*

Asbestos Abatement Oversight and Air Clearance Sampling, Multiple Sites, California (Associate Scientist)

*Scott worked under the direction of a Certified Asbestos Consultant in conducting visual inspection of the removal of asbestos-containing material during asbestos abatement activities. This included collecting air borne fiber samples in cartridges during and after abatement activities and submitting them under chain of custody to certified laboratories for analysis, per ASTM E 2356 Standard Practice on Comprehensive Building Asbestos Surveys.*

Lead-Based Paint, Surveys, Multiple Sites (Associate Scientist)

*Scott worked under the direction of a Lead Inspector / Risk Assessor in conducting lead-based paint surveys on commercial and industrial buildings up 160,000 square feet in size. This included collecting bulk samples of paint found in fair or poor condition and submitting the bulk samples under chain of custody to certified laboratories for analysis.*

** denotes projects completed with other firms*

# Scott E. Edblad CPESC, CESSWI, QSD/QSP, CSST, LRCST

Associate Scientist

### Polychlorinated Biphenyl Caulking Surveys, Multiple Sites, California (Associate Scientist)

*Scott conducted polychlorinated biphenyl (PCM) caulking surveys on commercial and industrial buildings. This included collecting bulk samples of caulking and submitting the bulk samples under chain of custody to certified laboratories for analysis.*

### Radionuclide Impact Assessment, Simi Valley, California (Associate Scientist)

*Scott assisted with a radionuclide assessment for strontium-90 (90Sr) and cesium-137 (137Cs) in surface soil under the ASTM C998-05 Standard on 2,800 acres of steep mountainous terrain. The assessment was conducted with respect to the California Land Reuse and Revitalization Act (CLRRA) between the DTSC and client. His tasks included soil sampling (including replicate samples for the DTSC), trenching with a backhoe, documenting all survey activities and observations in a controlled logbook, and packaging and shipping to an analytical laboratory in a manner that met all chain-of-custody requirements.*

### PCE and Petroleum Hydrocarbon Impact Assessment, Anaheim, California (Associate Scientist)

*Scott conducted drilling activities using continuous core, modified California split spoon, Simulprobe, and GeoProbe sampling techniques. Simulprobe assessment activities included soil sampling and classification, soil vapor sampling, groundwater sampling, and soil vapor well installation to assess onsite PCE, petroleum hydrocarbon, and VOC impacts. Geoprobe assessment activities included using a limited access rig to assess PCE impacts within the facility building. Hollow stem auger and percussion hammer drilling methods were utilized in the characterization activities. Other onsite activities included field management of drilling and onsite laboratory subcontractors, EnCore® and summa canister sampling procedures, and boring log completion.*

### Operations and Maintenance - Groundwater Treatment and Air Stripping Facility*, Newbury Park, California (Environmental Specialist)

*Scott was responsible for remediation system operations of a Groundwater Extraction and Treatment (GET) system at the former metal plating facility. GET system consists of eight extraction wells, chemical dosing, bag filtration, micro filtration, and an air stripping tower for treatment of volatile organic compounds (VOCs) and hexavalent chromium. His responsibilities included routine and non-routine maintenance consisting of troubleshooting of system performance and failure. This included pump malfunctions, chromium analyzer and blower maintenance, chemical mixing adjustments, micro filtration cleaning and maintenance, system optimization, data management, and routine performance reporting. Scott's job duties were performed in Level B personal protective equipment, which includes a full-face respirator and liquid resistant protective suit.*

### Asbestos Containing Materials, California (Staff Scientist)

*Scott assisted in asbestos containing material (ACM) assessment. Mapped and photographed potential ACM samples from various locations in and around client buildings.*

**Healthcare**

### Healthcare Property Assessments (Associate Scientist)

*Scott managed Phase I ESAs under the ASTM E1527-13 Standard for three major healthcare facilities in Orange County, California. One facility included escort through high security wings for mentally ill patients and maximum security inmates. All three assessments were completed simultaneously ahead of schedule and under budget.*

** denotes projects completed with other firms*

# Scott E. Edblad CPESC, CESSWI, QSD/QSP, CSST, LRCST

Associate Scientist

Healthcare Provider Property Transfer and Development (Associate Scientist)

*Scott has served on a team to provide consulting services to a healthcare provider throughout California, Hawaii, and the Pacific Northwest. These investigations have included numerous Phase I ESAs under the ASTM E1527-05 and -13 Standards and have involved drilling and sampling of soil, soil vapor, and groundwater utilizing various techniques; installation and sampling of monitoring wells; location of contaminant sources; evaluation of facility usage, and Risk Assessments to document protection of human health for facility users and construction workers. Remediation of soil, soil vapor, and groundwater were performed, including UST removal, contaminated soil removal and treatment, and evaluation of best available technologies for remedial actions.*

**Oil & Gas**

Confidential Client, California Environmental Quality Act (CEQA) Regulated Environmental Assessment, Richmond, California (Associate Scientist)

*Scott participated on a CEQA regulated environmental assessment for the excavation and transport of petroleum hydrocarbon impacted soil at an equipment lay-down yard and terminal located in the City of Richmond, California. He evaluated potential environmental impacts created by the excavation and transport of petroleum hydrocarbon impacted soil and, if warranted, provided mitigation measures to address identified impacts.*

California Environmental Quality Act (CEQA) Regulated Supplemental Environmental Assessment, Active Oil Field, Kern County, California (Associate Scientist)

*Scott conducted field surveys and participated on a CEQA regulated supplemental environmental assessment for the construction and operation of a carbon dioxide ($CO_2$) enhanced oil recovery (EOR) system at a 48,000-acre active oil field located in Kern County. He evaluated potential environmental impacts created by the construction and operation of the $CO_2$ EOR system, and if warranted provided mitigation measures to address identified impacts.*

Former Retail Petroleum Station Assessment and Remediation, Yorba Linda, California (Associate Scientist)

*Scott conducted drilling activities using continuous core, and modified California split spoon sampling techniques. Assessment activities included soil sampling and classification, and ozone sparge well installation to assess and remediate onsite petroleum hydrocarbon and VOC impacts. Hollow stem auger and percussion hammer drilling methods were utilized in the characterization activities. Other onsite activities included field management of drilling subcontractor, boring log completion, and ozone sparge well development.*

Site Assessment, Murrieta Retail Service Station, Murrieta, California (Associate Scientist)

*Scott prepared a work plan and site assessment report pursuant to Riverside County Department of Environmental Health directive letters. He proposed the locations of soil borings to define the lateral and vertical extent of soil contamination and determine possible impacts to groundwater based on diesel impacts identified during spill bucket replacement activities at a service station located.*

Agricultural Onsite Oil Sump Removal Management*, California (Environmental Specialist)

*Scott directed excavation activities in agricultural fields on behalf of Anadarko Petroleum, at the Donovan, Bradley, and Giacomini Leases in Santa Maria, California. Managed the onsite compliance of an Air Pollution Control District (APCD) air monitoring plan including record management, reporting, and agency/land owner interaction. Created, implemented, and managed an onsite storm water pollution prevention plan. Conducted PetroFLAG soil analysis during the excavation of over 25,000 cubic yards of hydrocarbon-impacted soil. Assisted in the development of air monitoring and site closure reports.*

** denotes projects completed with other firms*

# Scott E. Edblad CPESC, CESSWI, QSD/QSP, CSST, LRCST

Associate Scientist

### Residential Onsite Oil Sump Removal Management*, California (Environmental Specialist)

*Scott directed excavation activities in a residential neighborhood at the Twitchell Lease in Santa Maria, California. These excavation activities included shoring installation, the operation of a dewatering system, and agency/public interaction. Reviewed historical documents and conducted field assessments to determine the location and extent of hydrocarbon impacts associated with past oil field activities. Maintained field records and prepared a site closure report.*

### Onsite Oil Field Restoration Management*, California (Environmental Specialist)

*Scott directed excavation activities at the Rancho San Francisco and Ferguson Leases in Newhall, California. He managed the onsite compliance of a Rule 1166 air monitoring plan and Rule 403 fugitive dust mitigation plan including record management, reporting, and agency interaction. Scott promoted and increased onsite health and safety awareness, practices, and behaviors. He assisted in acquiring a contract with a waste hauling company, as well as coordinating with a receiving landfill for the implementation of a cost savings program. Scott assisted in creating, maintaining, and the onsite management of a storm water pollution prevention plan. He conducted PetroFLAG soil analysis during the excavation of more than 350,000 cubic yards of hydrocarbon-impacted soil. Additionally, he collected soil, air, and groundwater samples for hazardous properties analysis.*

### UST Removal and Excavations, California (Staff Scientist)

*Scott managed field activities for UST removal/upgrades and tank pit over excavation at service stations in California. His responsibilities included agency air quality monitoring, and soil sample collection during UST removal/upgrades and tank pit over excavation at service stations in California.*

### Air Quality Monitoring, California (Staff Scientist)

*Scott monitored air quality, in accordance with Rule 1166 Air Monitoring, and collected soil samples during the removal/upgrade of petroleum product lines and dispensing systems at various retail petroluem stations in California. Onsite activities included field management of construction contractor and agency interaction.*

### Various Petroleum Clients, Drilling Activities*, California (Staff Scientist)

*Scott conducted drilling activities at numerous sites using continuous core, modified California split spoon, and GeoProbe sampling techniques. The project included health and safety monitoring during soil sampling and classification, groundwater monitoring and vapor extraction well installation, and groundwater well development. Hollow stem auger and percussion hammer drilling methods were utilized in the characterization activities. Other onsite activities included field management of drilling subcontractor, EnCore® sampling procedures, soil and decontamination water drum inventory, and boring log completion.*

### Groundwater Remediation, California (Staff Scientist)

*Scott operated and maintained groundwater remediation systems based on biological activated carbon, high vacuum vapor/water extraction, air stripping, pumping, air sparging technology, and oxygen releasing compounds. He collected depth to groundwater measurements, dissolved oxygen readings, transducer readings, pressure and flow measurements, and made system adjustments necessary to maintain optimum air flow and distribution of oxygen in the subsurface.*

### Soil Vapor Extraction Systems, California (Staff Scientist)

*Scott operated and maintained soil vapor extraction systems (including Baker, King Buck, and Solleco) at LUFT sites located in Monterey, Santa Barbara, and San Luis Obispo Counties. He conducted field monitoring, air sampling, and data collection necessary to maintain compliance with air quality permits. Additionally, Scott obtained measurements of system performance and made field adjustments to optimize hydrocarbon recovery.*

### Retail Petroleum Stations Assessment and Remediation (Project Manager)

*Mr. Edblad managed numerous projects that involved assessment and remediation of petroleum releases at retail petroleum stations. His tasks included the collection of soil, soil vapor, and groundwater samples during assessments; UST removal activities; and after releases had been discovered, corrective action plan preparation, periodic agency reporting, and remediation oversight. Remediation methods included soil vapor extraction (SVE) with enhancement variations such as air sparge (AS) and biogac, total fluids extraction, oxygen releasing compounds, and excavation.*

** denotes projects completed with other firms*

# Scott E. Edblad CPESC, CESSWI, QSD/QSP, CSST, LRCST

Associate Scientist

**Roadways**

Caltrans Aerially Deposited Lead (ADL) Survey, Caltrans District 7, California (Associate Scientist)

*Scott served as part of a soil sampling team tasked with the mapping, collection, processing, and logging of multiple soil samples collected along 10 miles of the 210 freeway. The scope of the investigation included collecting 144 samples from 62 borings and analysis for total lead, with additional analysis of soluble lead by Cal WET, TCLP and Cal WET DI. The data was statically analyzed to optimize reuse on site and included designation of areas as Y-1, Y-2, and contractor release materials along the right of way.*

Caltrans Aerially Deposited Lead Survey, Caltrans District 7, California (Associate Scientist)

*Scott served as part of a soil sampling team tasked with the mapping, collection, processing, and logging of multiple soil samples collected along 34 miles of the 101 freeway conducted as three separate phased projects. The scope of the investigation included collecting 192 samples from 108 borings and analysis for total lead, with additional analysis of soluble lead by Cal WET, TCLP, and Cal WET DI. The data was analyzed to optimize reuse on site and included designation of areas as Y-1, Y-2, and contractor release materials along the right of way.*

Asbestos Survey, Caltrans District 7, California (Associate Scientist)

*Scott worked under the direction of a Certified Asbestos Consultant in conducting asbestos surveys on freeway bridges and overpasses along the 10 and 101 Freeways in the Los Angeles area. These included visual inspection for representative homogeneous areas of suspect asbestos-containing materials. This also included collecting bulk samples of suspect asbestos-containing materials and submitting the bulk samples under chain of custody to certified laboratories for analysis.*

**Stormwater Pollution Prevention Plans**

Plains All American Pipeline Company, Osito Canyon Retaining Wall Structure, Line 63 Re-Rout and Posey Canyon, Angeles National Forest, California (Associate Scientist)

*Scott prepared SWPPPs for three projects involving the relocation of multiple miles of crude oil pipeline in the Angeles National Forest that were threatened by erosion leading to the potential for landslide. SWPPPS were developed under the requirements of the California State Water Resources Control Board Order 2009-0009-DWQ, NPDES General Permit No. CAS000002 for Stormwater Discharge Associated with Construction and Land Disturbing Activities. The NDPES General permit requires submittal of Permit Registration Documents (PRDs), including Notice of Intent (NOI), Risk Assessment, SWPPP, monitoring data, Annual Report, and Notice of Termination (NOT) to the State Water Board via the Stormwater Multi Application and Report Tracking System (SMARTS) generated during these projects.*
*Risk levels, based on project duration, location, proximity to impaired receiving waters, and soil conditions, for these projects were determined to be Linear Underground/Overhead Projects (LUP) Type 1 and 2, which require sampling and analysis of stormwater run-on, runoff, and discharges to receiving water for pH, turbidity, and other chemicals of concern. Best management practices (BMPs) included waste management and material pollution control, erosion and sediment controls, tracking controls, good housekeeping, preventive maintenance, and stabilization measures were specified for project areas with the potential for erosion due to rain events during construction. Training was provided to on-site field staff regarding monitoring and sampling requirements and reported numeric action level (NAL) exceedances to develop corrective actions.*

Erosion Control Plan (ECP) Plains All American Pipeline Company, Osito Canyon Retaining Wall Structure, Line 63 Re-Route and Posey Canyon, Angeles National Forest, California (Associate Scientist)

*Scott prepared an ECP for a project involving the assessment and relocation of multiple miles of crude oil pipeline in the Angeles National Forest that were threatened by erosion leading to the potential for landslide. The ECP was developed as part of the requirements of an Environmental Assessment (EA) as part of a United States Forest Service (USFS) 299 Permit. BMPs including silt fence, fiber rolls, gravel bags, and woodstraw® were specified for project areas with the potential for erosion due to rain events during construction.*

** denotes projects completed with other firms*

# Scott E. Edblad CPESC, CESSWI, QSD/QSP, CSST, LRCST

Associate Scientist

**Spill Prevention Control and Countermeasure Plans**

Caltrans District 8 Spill Prevention Control and Countermeasure Plans, San Bernardino County, Riverside County, California (Associate Scientist)

*Scott prepared updated SPCC Plans for 10 Caltrans Maintenance Facilities in San Bernardino and Riverside Counties. Plans were prepared in accordance with the requirements of 40 CFR 112, with recommendations of the EPA's August 2013 Guidance Document for Regional SPCC Inspectors, including the document format, incorporated into each plan. Scott documented oil storage tanks, including oil-filled equipment and 55-gallon drums on a facility drawing and prepared the SPCC Plans for each facility. Non-compliances with SPCC requirements at the time of the inspection were documented in the final plans. Plans included recommendations for compliance with containment and tank inspection requirements. All 10 SPCC plans were delivered with a three (3) month period from project initiation, within the contracted budget.*

** denotes projects completed with other firms*

# Scott E. Edblad CPESC, CESSWI, QSD/QSP, CSST, LRCST

Associate Scientist

## PUBLICATIONS

Soil Survey for the Future Adelaida HMR Vineyards (Senior Project 01-1314). *Thesis (B.S.), California Polytechnic State university, San Luis Obispo*, 2001.

# Steven Brady PG, CEG, CHG

Managing Principal Hydrogeologist Technical Intro

With more than 30 years experience in environmental consulting, engineering, and construction fields, Steve has been involved with all aspects of regional and site-specific environmental investigations throughout the southwestern US, including CERCLA/SARA, RCRA, NEPA, and CEQA regulated projects. His experience includes remedial investigations/feasibility studies; risk assessments; soil, soil vapor, and groundwater assessments; contaminant fate and transport determinations; and contaminant delineation and treatment or removal. Other activities include watershed and wetlands investigations; siting investigations; forensic chemical investigations; and investigations using various investigative techniques.

Steve has worked with a range of commercial and industrial client sectors, with focus on construction related projects. His experience includes military/aerospace; semiconductor manufacturers; transportation (rail & vehicle); healthcare; petroleum (upstream, midstream, and downstream); property management, investment, development; and legal clients.

Steve conducts independent and peer review of documents for Quality Assurance/Quality Review requirements. QA/QC review is performed for a variety of client projects, including due diligence; soil, soil vapor, and groundwater assessments; compliance; O&M and remedial projects; and CEQA/NEPA projects. His experience with contaminants includes petroleum hydrocarbons; volatile organic compounds; semi-volatiles organics (including pesticides and PCBs); metals; radionuclides; and others.

Steve has participated as an expert for the California Board of Geology for determination of pass point criteria for multiple certifications.

## EDUCATION

BA, Architecture, University of North Carolina, Charlotte, North Carolina, 1979

MS, Geology, Arizona State University, Tempe, Arizona, 1988

8-Hour Health & Safety Annual Certification Update, OSHA, Los Angeles, California, 2014

8-Hour Supervisor's Certification, OSHA, Los Angeles, California, 1990

40-Hour Health & Safety Certification (29 CFR 1910.120), OSHA, Los Angeles, California, 1989

## REGISTRATIONS

Registered Geologist #50057, State of Arizona

Certified Hydrogeologist #542, State of California

Certified Engineering Geologist #2000, State of California

Professional Geologist #6031, State of California

## MEMBERSHIPS

Member, Association of Water Agencies of Ventura County

Member, Geological Society of America

## PROJECT EXPERIENCE

**Aboveground and Underground Storage Tank Management**

Underground Storage Tank Program Management for Major Oil Company Portfolios, Various Locations, California, Arizona, Nevada (Portfolio Manager)

*Steve managed regional portfolios of site assessment and remediation projects at gasoline-dispensing facilities across the southwestern US. He was responsible for planning and implementing projects involving UST system closure, site assessment, remediation system design, construction management, operation-and-maintenance, and risk-based corrective action analysis. Tasks included collection of soil, soil vapor, and groundwater samples during assessments, UST removal activities, and after releases have been discovered, corrective action plan preparation, agency liaison, negotiations, and reporting, and remediation oversight.*

** denotes projects completed with other firms*

*The sites were located in a variety of geologic terrains ranging from fractured bedrock to alluvium, and the depth to groundwater ranged from a few feet to several hundred feet. Contaminants typically included separate-phase hydrocarbons (SPH) and dissolved-phase motor fuel constituents. Remediation technologies used to clean up the various leaking UST sites included excavation, ozone sparging, air sparging, biosparging, soil vapor extraction, bioventing, groundwater pump-and-treat, dual phase extraction, high vacuum dual phase extraction, and aboveground bioreactors (to treat higher concentration liquid effluent).*

**Agriculture**

Agriculture Site Assessment, Monitoring, and Remedial Activities*, Santa Barbara, California (Project Manager)

*Steve served as the project manager for the soil and groundwater site assessment, quarterly groundwater monitoring, and oversight of remedial activities at an agricultural site. The site encompasses more than 60 acres, with approximately 20 acres within the coastal zone of Santa Barbara. In addition to releases from pesticide and chemical storage areas, diesel boilers, and fuel tanks, large portions of the site consisted of undocumented landfills. An assessment of soil and groundwater was performed for the site, and the extent of both soil and groundwater contamination due to releases of fuels and chemicals was determined. Calculations of groundwater gradient and rates of contaminant flow in the subsurface were performed. Remedial action plans were developed and implemented to remove landfills from the site.*

Agricultural Packing Plant SWPPP Development and Compliance Project* (Project Manager)

*As project manager, Steve was responsible for site facility audits to evaluate potential discharge locations, development of best management practices recommendations, and development of a Storm Water Pollution Prevention Plan for submission to the lead regulatory agency.*

**Airports & Aviation**

John Wayne Airport Soils and Groundwater Investigation* (Project Geologist)

*Steve conducted characterization, delineation, and remediation of hydrocarbon and volatile organic contaminated soils and groundwater at Orange County's John Wayne Airport. Duties included development of site-specific work plans and health and safety plans; permitting, drilling and sampling soil borings; installation of groundwater monitoring wells; installation, maintenance, and monitoring of a groundwater treatment system; compilation and analysis of analytical results; and preparation of monthly and quarterly reports.*

Norton Air Force Base Remedial Investigation*

*Steve served as project manager for a fast-track remedial investigation supporting RCRA closure of Norton Air Force Base NPL site in San Bernardino, California. Initial tasks consisted of assessment and demolition of two hazardous material storage facility areas at the Base. Part of the DRMO, these two storage facilities received all hazardous materials generated at the Base. A site-specific Work Plan, Chemical Data Quality Management Plan, and Health and Safety Plan were developed and approved by the U.S. Army Corps of Engineers, U.S. Air Force, and the California EPA. Field activities consisted of wipe sampling of facility surfaces prior to demolition, demolition and salvage of building materials, drilling 33 subsurface borings, and collecting concrete core, asphalt, and subsurface materials to assess conditions at the site. Demolition of the buildings was completed in one day and salvage operations were performed concurrent with the site assessment. A report was developed detailing activities and recommendations, and Certification of Closure was performed as a final task.*

March Air Force Base Site 17 Engineering Evaluation/Cost Analysis* (Deputy Project Manager)

*Steve served as deputy project manager for an Engineering Evaluation/Cost Analysis (EE/CA) for remedial actions at March Air Force Base Site 17, an abandoned pool which was backfilled with hazardous waste. Duties consisted of research, analysis, and generation of a report which includes development of scope and schedule for removal action objectives adhering to statutory limits for removal actions; identification and analysis of removal action alternatives, including effectiveness, implementability, and cost; comparative analysis of remedial alternatives; and recommendations for removal actions.*

** denotes projects completed with other firms*

# Steven Brady PG, CEG, CHG

Managing Principal Hydrogeologist Technical Intro

### Edwards Air Force Base and Phillips Laboratory Closure* (Project Manager)

*Steve managed an expedited remedial investigation under the Installation Restoration Program for closure of Edwards Air Force Base, Phillips Laboratory OU4, Sites 7 and 167, the 48 acre beryllium storage and test firing range for the Phillips Laboratory. Site 7 was used to stockpile beryllium-contaminated soils after explosions destroyed buildings on the Site. Site 167 received beryllium fallout from test firings of rocket engines. Duties included development of the work, sampling and analysis, and Health and Safety Plans, which were reviewed and approved by the U.S. Army, the U.S. Air Force, and the U.S. EPA.*

### March Air Force Base, Hawes Site Closure*, San Bernardino County, California (Project Manager)

*Steve managed a remedial investigation under the Installation Restoration Program for closure and property transfer of March Air Force Base, Hawes Site in San Bernardino County, California. The Hawes Site consists of a former auxiliary airport and radio tower, and encompasses approximately 305 acres of federally endangered species habitat. Initial duties included an endangered species survey of the Site, development of an endangered species Conservation Plan, and a geophysical survey of the Site. The Conservation Plan was reviewed and approved by the U.S. Fish and Wildlife Service. Site specific Work Plans, Sampling and Analysis Plans, and Health and Safety Plans were then developed for the Site and approved by the U.S. Army Corps of Engineers, the U.S. Air Force, the U.S. EPA, the California EPA, and the Regional Water Quality Control Board. The planning documents detailed protection of endangered species and assessment of potential contamination and closure of fuel and waste oil USTs, removal of septic tanks and leach fields, removal of underground tanks, geophysical logging and closure of the onsite water supply well, removal of numerous utility vaults, demolition and removal of a storage building, removal of scrap and debris from the Site, and asbestos abatement of the bunker and bunker area.*

### Brownfield Investment Property Fast-Track Investigation*, Santa Monica, California (Project Manager)

*Steve served as project manager for a fast-track investigation on a Brownfield investment property that was formerly a portion of the original McDonnell Douglas Aircraft manufacturing facility in Santa Monica. Work plans were developed and approved by the client, property owner, and lender. Soil gas surveys and soil sampling assessments were performed to characterize the nature, levels, and potential sources of contamination at the site. The entire project was completed within three weeks and recommendations were provided to the client aimed at limiting future liability. Negotiation support was provided to assist in obtaining funding.*

### Former Military/Aerospace Manufacturer Remedial Oversight* (Project Manager)

*Steve performed remedial oversight at a former military/aerospace manufacturer in Santa Ana, California. Extensive quantities of chlorinated solvents, metals, and fuels were released into subsurface soils and groundwater by a past military/aerospace tenant. Numerous remedial actions have been performed at the site. A summary report was developed detailing the nature and levels of contamination in the soil and groundwater aquifers, a summary of the prior assessments and remedial activities performed at the site, an opinion regarding the extent of contamination in the subsurface and different water-bearing zones, and an opinion regarding the adequacy of the former tenants proposed assessment and remedial activities. Assistance with negotiations with the tenant and the RWQCB regarding site remediation was provided.*

### Municipal Airports Fast-Track Compliance Audits and Evaluations, Various Locations (Project Manager)

*Steve served as project manager for the fast-track compliance audits and historical evaluations of seven municipal airports in Southern California, Washington, and Pennsylvania. The project involved agency file and database research, historical document research, and site facility audits to determine compliance status with appropriate regulations, as well as generation of summary reports aimed at limiting future liability for the new operators at the airports.*

** denotes projects completed with other firms*

# Steven Brady PG, CEG, CHG

Managing Principal Hydrogeologist Technical Intro

**Condition Assessments**

Cave Creek Groundwater Mapping and Siting* (Project Manager)

*Steve conducted mapping and siting of multiple groundwater production wells in Arizona for an assured water supply for the City of Cave Creek and in support of a proposed golf course and country club development. Well locations were selected and logging and evaluation of test boring conducted to more than 1,000-foot bgs. Screen depths were selected for the wells and oversight of well construction was completed.*

Seismograph Station Siting* (Project Manager)

*Steve conducted siting of multiple Seismograph Station arrays to locate significant, active fault segments in Central and Southern California meeting specific lithological criteria. The seismograph arrays were designed to obtain near-field seismic effects. The project involved review of numerous geologic and geotechnical reports, evaluation of data from existing seismograph arrays, field mapping and site reconnaissance, contact with property owners to obtain lease permits, and generation of a report detailing conclusions and recommendations.*

Pacific Palisades Landslide and Contamination Investigation*, Los Angeles, California (Project Manager)

*Steve served as the project manager for the geohydrologic and environmental portions of an investigation to evaluate landslide potential and potential soil and groundwater contamination for a proposed force main line in the Pacific Palisades for the City of Los Angeles, Geotechnical Services Division. Numerous ancient and historic landslides occur in the Pacific Palisades, many of which have activated due to the presence of high groundwater. The study required review and compilation of prior geotechnical and environmental data; geologic field mapping and surveying; geotechnical and environmental drilling, sampling, and chemical and physical analysis of soil and groundwater; review of historical and site-specific oblique, vertical, and infrared aerial photographs; data compilation and analysis; determination of groundwater sources; and map and report preparation with evaluation of alternatives and recommendations.*

Methane and Leachate Collection Systems Investigation* (Project Manager)

*An investigation of the methane and leachate collection systems operational at a golf and country club, on the site of a former landfill in the Santa Monica Mountains, was performed. An extensive review of available landfill and facility construction and monitoring data was conducted, as well as research on documentation available from the RWQCB, the Department of Fish & Game, and the US Army Corps of Engineers. Site and facility audits were performed to evaluate the present condition of the methane, gas condensate, and leachate collection systems. Conclusions and opinions were provided to the client concerning the operation, maintenance, and adequacy of the collection systems. Mitigative measures were recommended to the client aimed at limiting offsite migration of methane and improving water quality downgradient from the landfill.*

UK and US Golf Course UST Compliance* (Project Manager)

*Steve served as project manager for a compliance status summary of the underground storage tanks at 250 client-owned golf courses throughout the UK and US. The project involved review of tank data from the various courses and management/oversight of the development of a database that contained pertinent details including quantity of USTs and aboveground storage tanks, installation dates, and other tank/tank appurtenance information. The database allowed for searches and sorting to determine compliance with the US-EPA UST compliance deadline.*

** denotes projects completed with other firms*

# Steven Brady PG, CEG, CHG

Managing Principal Hydrogeologist Technical Intro

**Environmental Site Assessments Phase I, II, III**

Phase I ESAs and Liability Evaluation, Confidential Client, Multiple Foundries, Southern California

*Steve was part of the Stantec team that completed concurrent Phase I ESAs and an overall evaluation of potential pollution liability for multiple foundries. The projects were completed during a business purchase transaction whereby the properties and their associated environmental liability would become the responsibility of the new land owner. At the time of evaluation, the foundry sites were each in various stages of environmental assessment and remediation, and under regulatory oversight by the Los Angeles Regional Water Quality Control Board (LARWQCB). The liability evaluations consisted of assessing the potential remaining environmental assessment and remediation that may be required by the LARWQCB, and development of potential costs associated with obtaining regulatory closure. Potential future environmental liabilities associated with purchasing the impacting properties and the foundry business operations were also included as they might pertain to the purchase of the business and its assets/liabilities. Because the projects were completed during the pre-transaction due diligence period, the projects were coordinated and completed within an expedited timeframe by a team of Stantec professionals across multiple offices.*

Healthcare and/or Environmental Site Assessment Phase I, II, III, Various Locations, California, Oregon, and Washington (Project Manager)

*Steve managed numerous Phase 1, Phase II, and remedial projects associated with property transfer and development for a major health care provider throughout California and the Pacific Northwest. Numerous specialized assessments have been conducted for various existing or planned hospitals, medical office buildings, and support facilities. These investigations have involved drilling and sampling of soil, soil vapor, and groundwater utilizing various techniques; installation and sampling of monitoring wells and calculated rates and direction of groundwater flow; location of contaminant sources; evaluation of facility usage, and Risk Assessments to document protection of human health for facility users and construction workers. Remediation of soil, soil vapor and groundwater have been performed, including underground storage tank removal, contaminated soil removal and treatment, and evaluation of best available technologies for remedial actions. Project support has involved negotiations with regulatory agencies, legal counsel, and property owners.*

Retail Tire Facility and/or Environmental Site Assessment Phase I, II, III (Project Manager)

*Steve served as Project Manager for numerous combined Phase I and Phase II environmental site assessments, groundwater monitoring, remedial actions, and reporting projects for a major retail tire facility. Projects generally included assessing the extent of contamination associated with hydraulic lifts, USTs, and other activities associated with operating a tire replacement facility, as well as remediating the extent of assessed contamination and negotiating cleanup levels with the local enforcement agencies.*

Multiple Combined Phase I and II ESAs (Project Manager)

*Steve served as Project Manager for numerous combined Phase I and Phase II environmental site assessments, groundwater monitoring, remedial actions, and reporting projects for a major retail tire facility. Projects generally included assessing the extent of contamination associated with hydraulic lifts, USTs, and other activities associated with operating a tire replacement facility, as well as remediating the extent of assessed contamination and negotiating cleanup levels with the local enforcement agencies.*

Seven Oaks Dam Mitigation Property Environmental Assessment*, Redlands, California (Project Manager)

*Steve served as the project manager for an environmental assessment of the 64-acre Seven Oaks Dam Mitigation property in the Santa Ana River Flood Channel, Redlands. The project consisted of a Phase I level site assessment and soil gas survey. The project involved research, historic air photo analysis, site reconnaissance and mapping, installation of soil gas monitoring wells, soil-gas sampling for volatile organics, data compilation and analysis, and preparation of a report detailing activities and conclusions.*

** denotes projects completed with other firms*

# Steven Brady PG, CEG, CHG

Managing Principal Hydrogeologist Technical Intro

### Nike Site Environmental Assessment and Closure*, Puente Hills, California (Project Manager)

*Steve served as the project manager for an environmental assessment aimed at gaining site closure for a 55-acre Nike missile battery located in the Puente Hills of Los Angeles County. The site consisted of three areas on two separated ridge tops; the administration area and launch area (also known as the Lower Site) were on one of the ridge tops, and the control area (also known as the Upper Site) was located on an adjacent ridge top. The Nike Site contained aboveground and underground storage tanks, a vehicle maintenance shop, underground missile storage and launch facilities, aboveground missile assembly, fueling, and testing facilities, surveillance facilities, barracks, and an underground network of tunnels. Duties consisted of research, negotiations with the Cal-EPA, development of Work Plans and Health and Safety Plans, geophysical and radiation surveys, drilling and sampling soil and bedrock, and sampling for asbestos containing building materials. Reports were developed detailing options and recommendations for property transfer of a complex military site.*

### Los Angeles and Ventura Counties Property Investigations and Transfers (Project Manager)

*Steve served as project manager for commercial and industrial property transfers and litigation support in Los Angeles and Ventura Counties. Numerous specialized assessments have been conducted for various financial institutions. These investigations have involved drilling and sampling of soil and groundwater utilizing geoprobe, hydropunch, hollowstem auger, and other techniques; installation and sampling of monitoring wells and calculated rates and direction of groundwater flow; location of contaminant sources; and evaluation of facility usage, and Risk Assessments. Remediation of soils and groundwater have been performed, including underground storage tank removal, contaminated soil removal and treatment, and evaluation of best available technologies for remedial actions. Project support has involved negotiations with regulatory agencies, legal counsel, and property owners.*

### Telecommunication Property Site Assessment*, Santa Barbara, California (Project Manager)

*Steve performed a subsurface soil and groundwater site assessment of a telecommunication property in Santa Barbara. Adjacent properties had released PCE and TCE into the subsurface soils and groundwater, but contamination at the site appeared disconnected from the larger plume originating offsite. A work plan and health and safety plan were developed and approved by the client and their corporate counsel. Multiple continuous-cored geoprobe borings were drilled and soil, soil vapor, and groundwater samples collected. Through analysis of the lithology, it was shown that the subsurface consisted of an ancient nearshore, lagoonal environment transected by stream channels. Two separated plumes were shown to occur at the site, with the larger plume derived from an offsite source and the smaller plume originating from onsite operations. A health-based risk assessment was performed for the property to determining appropriate cleanup levels.*

### Metal Stamping and Forming Facilities Property Transfer (Project Manager)

*Steve served as project manager in support of property transfer of three metal stamping and forming facilities. Two of the sites were listed as potential contributors to the contamination in the San Gabriel Valley groundwater, with the third listed by the U.S. EPA as within the top 16 contributors to the groundwater contamination in the Baldwin Park Operable Unit (OU). Research was performed on the individual sites and their contribution to the San Gabriel Groundwater Basin contamination; on the nature and extent of contamination in the San Gabriel Valley Groundwater Basin; on the locations and calculated contributions to the contamination in the Baldwin Park OU from other known PRPs; and on the water delivery and remediation plans for the different San Gabriel Valley OUs, and in particular, in the Baldwin Park OU. Opinions were generated regarding potential future liability for ownership of each facility, and an evaluation of the sources of contamination found in the Baldwin Park OU was developed. Determinations of legal implications and calculations of environmental liability were performed, and a range of anticipated costs associated with ownership of the properties were presented. Results were used in negotiations for the properties. Facility audits were performed at each site, with recommendations provided for equipment and process upgrades, which were aimed at limiting future releases and overall liability.*

** denotes projects completed with other firms*

# Steven Brady PG, CEG, CHG

Managing Principal Hydrogeologist Technical Intro

Ventura County Phase I and II Site Assessments (Project Manager)

*Steve managed multiple Phase 1 and 2 site assessments for coastal properties in Ventura County consisting of a power generating facility tank farm, hazardous materials storage area, agricultural, and degraded wetland areas to be acquired and restored to wetland conditions. The projects included research; soil, surface water, and groundwater sampling; assistance in property acquisition negotiations; and providing engineering geologic, hydrogeologic, and environmental and risk-based opinions ,and recommendations aimed at facilitating the property acquisition while limiting liability to the State of California. Participation on the project included oversight during tank farm and hazardous material storage area decommissioning and property restoration.*

**Environmental Site Remediation**

South Gate Tank farm Closure Reports (Project Manager)

*Steve developed remedial closure reports for a multiple-owner tank farm in the City of South Gate. To facilitate development of the property, the tank farm was split into four separate parcels. Remediation of the soils was performed, with impacted soils exceeding cleanup levels excavated and transported offsite, impacted soils within cleanup levels inhumed into a constructed soil repository, and clean soils reused during regrading activities. The project was estimated by prior consultants to cost more than $9 million to complete; however, the project was finished on an expedited basis and received RWQCB closure for approximately $1 million, a considerable savings to the client. Additionally, development of the property was performed on a parcel-by-parcel basis, allowing the City's contractor to begin development in a timely manner.*

**Healthcare**

Confidential - Former NASA Industrial Facility, Hospital and MOB Redevelopment, Downey, California (Project Manager)

*Steve was the project manager for a combined environmental and geotechnical evaluation of a former NASA industrial plant demolition and redevelopment as a hospital and medical office building complex. The NASA facility was utilized for Gemini, Apollo, and Space Shuttle testing, and included an airfield, hazardous material storage, and cryogenic and physical testing areas. The project involved historical research to locate former hazardous material usage and storage areas; drilling and sampling of soil, soil vapor, and groundwater to evaluate impacts; combining the geotechnical and environmental sampling for efficiency and cost savings; development of assessment and health risk (PEA) reports for submission to the DTSC; asbestos and hazardous material abatement reports for use for demolition purposes; geotechnical reports for site grading, foundation, pile, liner design, and backfill requirements; construction oversight; and participation with client legal counsel in negotiations with state regulatory agencies.*

**Justice**

INS Border Patrol Stations Remedial Investigations* (Project Manager)

*Steve served as the project manager for remedial investigations at the INS Border Patrol Stations in Campo and Calexico, California. Leaking underground fuel tanks had released significant quantities of gasoline into the subsurface and groundwater at each site. Unique, complex geohydrologic conditions occur in the subsurface, with groundwater contamination at the Campo site largely following an ancient buried river channel, but overflowing the subsurface "paleo-banks" during winter high water conditions. Groundwater contamination at the Calexico site occurred within interspersed sand lenses of a thick clayey (nearshore lacustrine) formation 10 feet below ground surface, and extends under a residential area. A geoprobe sampling device and onsite mobile laboratory was used to define the aerial extent of the groundwater plumes, and groundwater monitoring wells were installed for confirmation sampling and to determine groundwater gradient. Site specific Work Plans, Sampling and Analysis Plans, Health and Safety Plans, and reports detailing conclusions and recommendations were developed and approved by the U.S. Army Corps of Engineers for each major phase of the project. Negotiations with the lead regulatory agencies were performed on behalf of the INS.*

** denotes projects completed with other firms*

# Steven Brady PG, CEG, CHG

Managing Principal Hydrogeologist Technical Intro

**Marine & Port Facilities**

Port of Los Angeles As-Needed Environmental Services* (Project Manager)

*Steve served as project manager for as-needed environmental services for the Port of Los Angeles. Duties included review and compilation of data from numerous prior reports into summary reports; and environmental drilling, sampling, and monitoring well installations at the proposed Terminal Island Container Transfer Facility (TICTF) to determine if contaminated soil occurred at hazardous levels, and the levels of volatile organic and metals contamination in the groundwater. A report detailing conclusions and recommendations was generated for the TICTF site. An additional study was performed at the Proposed Dry Bulk Handling facility to assess hydrocarbon and volatile organic contamination.*

Los Angeles Harbor Department's Henry Ford Bridge Replacement Project* (Project Manager)

*Steve served as project manager for a geologic, hydrologic, and contamination report for input to an EIR/EIS for the proposed Los Angeles Harbor Department's Henry Ford Bridge replacement project at the Port of Los Angeles. Duties included review of existing geologic, hydrologic, environmental data, and historical aerial photos; data compilation; seismic analysis; identification of impacts to the environment, workers, and the project; evaluation of mitigative measures; and report preparation.*

Todd Pacific Shipyard Groundwater Investigation, Los Angeles, California (Field Manager and Technical Reviewer)

*Steve served as field manager and technical reviewer for a soil and groundwater investigation at the Todd Pacific Shipyard at the Port of Los Angeles. The Shipyard was a 109-acre ship-building and repair facility at the Port. Responsibilities included management of the field sampling program at potential contamination sources such as machine pit, sumps, clarifiers, and dry wells in the maintenance/manufacturing buildings; drilling of shallow borings with limited access rigs at the targeted source areas; and collection of numerous groundwater samples at locations where suspected groundwater contamination might exist. In addition, quality control review of the reports developed for fire department and RWQCB compliance was also conducted.*

**Mixed-Use**

Port of San Diego Rohr Facility, Chula Vista, California

*Steve was responsible for a detailed subsurface assessment of the Rohr facility. The intent of the assessment was to evaluate the 40-acre former aircraft part manufacturing facility for acquisition by the Port of San Diego for redevelopment into a business park and entertainment complex. The assessment identified the presence of soil, soil vapor, and groundwater impacts by petroleum hydrocarbons, VOCs, heavy metals, PCBs, and semi-volatile organic compounds. He utilized many sampling techniques to assess the limits and concentrations of contaminants in the subsurface. Ultimately, the team was able to develop a cost estimate for potential remedial action cost associated to corrective action to allow redevelopment.*

**Oil & Gas**

Retail Petroleum Stations Assessment and Remediation (Project Manager)

*Steve managed numerous projects that involved assessment and remediation of petroleum releases at retail petroleum stations. Tasks included collection of soil, soil vapor, and groundwater samples during assessments, UST removal activities, and after releases have been discovered, corrective action plan preparation, periodic agency reporting, and remediation oversight. Remedial actions have included SVE with enhancement variations such as AS and biogac, total fluids extraction, oxygen releasing compounds, and excavation.*

Ventura County Oil Fields* (Project Manager)

*Steve prepared permit applications, FESOP reporting forms, Storm Water Pollution Prevention Plans, Storm Water Monitoring Plans, and Notices of Intent for two oil fields in Ventura County. The plans involved documenting past releases, mitigative measures to control future releases, details of sampling methodology and timing of sampling events, and development of summary tables and forms for field personnel to use as documentation for sampling during storm events.*

** denotes projects completed with other firms*

# Steven Brady PG, CEG, CHG

Managing Principal Hydrogeologist Technical Intro

**Power Transmission & Distribution**

PG&E Former G Street Substation, Fresno, California, Fresno, California

*Steve was part of a team in conjunction with the DTSC to oversee investigation and cleanup, with the ultimate goal of certifying the site for unrestricted use. He completed a Preliminary Endangerment Assessment (PEA) that included a human health risk assessment (HHRA) and development of site-specific cleanup goals for constituents of concern. Following review of the PEA and feedback from DTSC, cleanup goals for lead, arsenic, PCBs, benzo(a)pyrene, and petroleum hydrocarbons in soil were approved by DTSC. We prepared a Removal Action Work (RAW) plan that recommended site-wide excavation of soils to approximately 1.5 feet to meet the cleanup goals. The DTSC approved the RAW and the excavation was completed in June 2009. During the remediation phase, he worked closely with DTSC staff to respond to changing field conditions. The remedial action was approved by DTSC in January 2010, and the site was certified for unrestricted use.*

**Retail / Commercial**

Dry Cleaning Facility Assessment and Audit* (Project Manager)

*Steve served as project manager for the soil and groundwater assessment, facility audit, and oversight of remedial activities at an active dry cleaning facility. Releases of PCE from older dry cleaning equipment and drum storage locations were investigated and the extent of both soil and groundwater contamination due to the releases was determined. Groundwater samples were also collected from perched zones and from below the groundwater table using a hydropunch sampling tool. Calculations of attenuation factors and PCE cleanup levels were performed using the LA RWQCB's Interim Guidance for VOC Impacted Sites.*

**Roadways**

Cajalco Transportation Corridor EIR Investigation* (Project Geologist)

*Steve developed the geologic portion of an EIR investigation for the proposed Cajalco Transportation Corridor. Duties included review of existing geologic and geotechnical information; review of historical and project specific vertical stereographic photographs; geologic field reconnaissance; slope stability and seismic considerations; identification of impacts and evaluation of mitigative measures; and preparation and submittal of a report and maps presenting geologic units, existing landslides, and potential constraints. In addition, preliminary environmental data was compiled and provided to the design team for evaluation of the different corridor segments.*

California SR125 Corridor Site Investigation and Assessment* (Project Manager)

*Steve served as project manager for a geologic/geotechnical investigation and hazardous materials assessment for the California SR 125 Corridor. The purpose of the study was to provide geologic, geotechnical, and environmental input for an EIR/EIS document consistent with Caltrans requirements to the engineering team evaluating the various alignment alternatives. The project included an environmental assessment, geologic reconnaissance, and seismic analysis of the alignment and alternatives. A contingency plan was developed for managing hazardous materials during road construction.*

Foothill Transportation Corridor Geotechnical Investigation*, Orange County, California (Project Geologist)

*Steve performed geologic portions of a geotechnical investigation for the proposed Foothill Transportation Corridor through in Orange County. The investigation provided geotechnical design criteria for proposed bridges, highway embankments, and appurtenant structures. Duties included coordination of services, supervision of geologic field and trench mapping, down-hole logging of borings to 175 feet below ground surface, determination of groundwater depth and gradient, compilation of data and maps, and report preparation.*

** denotes projects completed with other firms*

# Steven Brady PG, CEG, CHG

Managing Principal Hydrogeologist Technical Intro

**Transit**

San Diego Mission Valley Commuter Rail Alignments and Alternatives Site Assessments* (Project Manager)

*Steve served as project manager for Site Assessments on the San Diego Mission Valley East and Mission Valley West commuter rail alignments and alternatives. Duties included development of Phase I alignment reports for the projects, including detailed environmental evaluation of alternatives with recommendations, and liaison with MTDB real estate and geotechnical design staff and local regulatory agencies. Each report involved research and government/regulatory database searches, historic air photo analysis, site reconnaissance, property owner interviews, generation of alignment maps indicating problematic areas, and detailed conclusions and recommendations. Additional assignments for the MTDB included peer review of other consultant's work and management of construction monitoring services for the MTDB's Cuyamaca Street Improvements project.*

Los Angeles County Metropolitan Transportation Authority (MTA) Environmental Services* (In-House Project Manager)

*Steve served as the in-house project manager for MTA environmental services. He provided coordination and management of due diligence activities for the Phase I, II, and III site assessments on SPTCo, AT&SF, UPRR, and adjacent properties, as well as individual and multiple parcel acquisitions. Duties consisted of generation of RFP scope-of-work and engineer's estimates for environmental and hydrogeologic investigations; evaluation of consultants reports and raw data; recommendations concerning liability and effects of soil and groundwater contamination on the proposed and ongoing rail line, station, and tunneling projects; recommendations for remedial actions/mitigative measures for each project; liaison with MTA Staff and legal council; and negotiations with property owners and regulatory agencies to set project cleanup criteria for contaminated sites. A commendation was received from the MTA for the work performed on this contract. Steve also managed site assessments on more than 300 miles of MTA corridor right-of-way, as well as performed specialized assessments for individual parcels. Conclusions and recommendations provided were used for property negotiations. In addition, Steve was the response team manager for MTA Real Estate and METROLINK division of the MTA.*

Monitoring Well Abandonment and Closure Activities – Moorpark Maintenance Facility, Ventura County, California (Project Manager and Director)

*Steve managed and directed monitoring well abandonment and closure activities for the Caltrans Moorpark Maintenance Facility located in Ventura County. Seven onsite groundwater monitoring wells were abandoned in accordance with State of California Water Well Standards (Bulletins 74-81 and 74-90), by over-drilling with a hollow-stem auger to approximately 50 feet below ground surface and backfilling the boreholes with a cement/bentonite grout mixture. Following the completion of abandonment activities, he coordinated waste removal activities. All waste was properly disposed/recycled in accordance with all applicable Federal, State, and local regulations. Upon completion of all field activities, Steve prepared and submitted a Well Destruction Report to the Ventura County Department of Public Works Water Resources Division and the Los Angeles Regional Water Quality Control Board. Agency closure from the Ventura County Environmental Health Division was received for the Moorpark Maintenance Facility.*

Groundwater Monitoring, Abandonment, and Closure Activities - Big Sycamore Maintenance Facility, Ventura County, California (Project Manager and Director)

*Steve managed and directed semiannual groundwater sampling and reporting for the Caltrans Big Sycamore Maintenance Facility located in Ventura County. Groundwater sampling and reporting were required to maintain compliance with Ventura County Environmental Health Division (VCEHD) mandates. Prior to the commencement of field activities, he reviewed the County-approved Work Plan, prepared a Site-Specific Health and Safety Plan for groundwater monitoring activities, retained a Caltrans-approved and CDOHS-accredited analytical laboratory, and provided notification to the VCEHD inspector at least 48 hours in advance of each sampling event. Upon completion of each groundwater monitoring event, Steve prepared and submitted a Groundwater Monitoring Report to the VCEHD. Based on favorable results from groundwater monitoring activities, VCEHD recommended site closure to the Los Angeles Regional Water Quality Control Board.*

** denotes projects completed with other firms*

*Additionally, Steve conducted monitoring well abandonment and closure activities for the Caltrans Big Sycamore Maintenance Facility. Eight onsite groundwater monitoring wells were abandoned in accordance with State of California Water Well Standards by over-drilling with a hollow-stem auger to approximately 35 feet below ground surface and backfilling the boreholes with a cement/bentonite grout mixture. Following the completion of abandonment activities, he coordinated waste removal activities. All waste was properly disposed/recycled in accordance with all applicable Federal, State, and local regulations.*

### Groundwater Monitoring – Ojai Maintenance Facility, Ventura County, California (Project Manager and Director)

*Steve managed and directed semiannual groundwater sampling and reporting for the Caltrans Ojai Maintenance Facility located in Ventura County. Groundwater sampling and reporting were required to maintain compliance with Ventura County Environmental Health Division (VCEHD) mandates. The groundwater monitoring activities were completed in accordance with the requirements of the Ventura County Leaking Underground Fuel Tank (LUFT) Guidance Manual (Fourth Edition, April 2001). Following the completion of sampling activities Steve coordinated waste removal activities. All waste was properly disposed/recycled in accordance with all applicable Federal, State, and local regulations. Upon completion of each groundwater monitoring event, he prepared and submitted a Groundwater Monitoring Report to the VCEHD.*

### Groundwater Monitoring and Assessment Activities – Ventura Maintenance Facility, Ventura, California (Project Manager and Director)

*Steve managed and directed semiannual groundwater sampling and reporting for the Caltrans Ventura Maintenance Facility located in Ventura County. Groundwater sampling and reporting were required to maintain compliance with Ventura County Environmental Health Division (VCEHD) mandates. Prior to the commencement of field activities, he reviewed the County-approved work plan, prepared a Site-Specific Health and Safety Plan for groundwater monitoring activities, retained a Caltrans-approved and CDOHS-accredited analytical laboratory, and provided notification to the inspector 48 hours in advance of each sampling event. Upon completion of each groundwater monitoring event, Steve prepared and submitted a Groundwater Monitoring Report to the VCEHD.*

*Additional assessment required by the VCEHD included evaluation of soil and groundwater to evaluate whether released had also occurred from the waste oil tank. The scope of work was developed for the advancement of eight soil borings around the waste oil tank. Upon completion of all field activities, prepared and submitted a Waste Oil Tank Area Assessment Report to the VCEHD*

### Limited Site Investigation and Reporting – Altadena and Newhall Maintenance Facilities, Los Angeles County, California (Project Manager)

*Steve managed implementation of a limited site investigation and reporting project for the Caltrans Altadena and Newhall Maintenance Facilities for the evaluation of potential impacts near the former USTs. These investigations were conducted in order to maintain compliance with County of Los Angeles Department of Public Works mandates. Steve was liaison with the lead regulatory agency, oversaw field activities and prepared Subsurface Investigation reports documenting field procedures, evaluating analytical results, and recommending no further action (NFA) status from the Los Angeles County Department of Public Works.*

**Transit-Oriented Development**

### Limited Site Investigation and Reporting - Altadena and Newhall Maintenance Facilities, Los Angeles County, California (Project Manager)

*Steve managed implementation of a limited site investigation and reporting project for the Caltrans Altadena and Newhall Maintenance Facilities for the evaluation of potential impacts near the former USTs. These investigations were conducted in order to maintain compliance with County of Los Angeles Department of Public Works mandates. Steve was liaison with the lead regulatory agency, oversaw field activities and prepared Subsurface Investigation reports documenting field procedures, evaluating analytical results, and recommending no further action (NFA) status from the Los Angeles County Department of Public Works.*

** denotes projects completed with other firms*

# Steven Brady PG, CEG, CHG

Managing Principal Hydrogeologist Technical Intro

**Water**

Santa Clara River Watershed Hydrogeologic and Hydrologic Evaluation*

*Steve served as a member of the project team evaluating the hydrogeologic and hydrologic conditions within portions of the Santa Clara River watershed. An extensive water budget analysis was performed on individual watersheds and contributory streams to the eastern groundwater basin, as well as for the entire groundwater basin, of the Santa Clara River, to estimate volumes of available water at any portion of the Basin.*

Calleguas Creek Watershed Management Planning Habitat and Recreation and Water Quality Subcommittees (Geologic and Hydrogeologic Engineer)

*Steve participated as a member of the Calleguas Creek Watershed Management Planning Habitat and Recreation and Water Quality Subcommittees.He provided engineering geologic and hydrogeologic opinions and recommendations to the committees aimed at consensus for management and obtainment of numerous conflicting goals of the various stakeholders. Additionally, he served on the Calleguas Creek wetlands restoration team for the California Coastal Conservancy identifying wetlands restoration candidates in the watershed.*

Calleguas Creek/Ormond Beach Wetlands, Oxnard, California (Project Manager)

*Steve managed multiple site assessments and risk evaluations for the acquisition of coastal and proposed wetland restoration properties in Ventura County. Properties included tank farms, hazmat storage areas, degraded wetlands, and agricultural land. Projects included oversight of tank farm decommissioning, remedial cost estimates and recommendations.*

** denotes projects completed with other firms*

# Appendix C
# USER PROVIDED RECORDS

## Grayson Unit Status

As Of : Oct 8, 2015 8:15

**Unit 1** **Unavailable**
Capacity : 0
Comment : #1 Unit offline 1140 hrs. 9/24/15. Still on test mode.
Start Date : Sep 24, 2015 11:40
ETR Date : Oct 9, 2015 18:00

**Unit 2** **On Line**
Capacity : 1
Comment :
Start Date : Apr 9, 2015 11:26
ETR Date :

**Unit 3** **Hot Stand-By**
Capacity : 10
Comment : Capacity restricted to 10 MW's, no Large F.D. Fan.
Start Date : Sep 25, 2015 12:00
ETR Date :

**Unit 4** **Unavailable**
Capacity : 0
Comment : Boiler retube
Start Date : Apr 13, 2015 0:00
ETR Date : Jun 1, 2016 18:00

**Unit 5** **On Line**
Capacity : 40
Comment :
Start Date : Sep 3, 2015 12:03
ETR Date :

**Unit 8A** **Hot Stand-By**
Capacity : 34
Comment : 0800- #8A Unit emergency only restriction lifted, unit available in hot standby status.
Start Date : Oct 8, 2015 8:00
ETR Date :

**Unit 8BC** **Hot Stand-By**
Capacity : 68
Comment :
Start Date : Sep 26, 2015 21:25
ETR Date :

**Unit 9** **Hot Stand-By**
Capacity : 48
Comment :
Start Date : Oct 5, 2015 15:15
ETR Date :

# Appendix D
# ENVIRONMENTAL AGENCY DATABASE SEARCH REPORT

**800 Air Way**
800 Air Way
Glendale, CA 91201

Inquiry Number: 4655459.2s
June 23, 2016

# The EDR Radius Map™ Report with GeoCheck®

6 Armstrong Road, 4th floor
Shelton, CT 06484
Toll Free: 800.352.0050
www.edrnet.com

# TABLE OF CONTENTS


| SECTION | PAGE |
|---|---|
| Executive Summary | ES1 |
| Overview Map | 2 |
| Detail Map | 3 |
| Map Findings Summary | 4 |
| Map Findings | 8 |
| Orphan Summary | 327 |
| Government Records Searched/Data Currency Tracking | GR-1 |

## GEOCHECK ADDENDUM

| | |
|---|---|
| Physical Setting Source Addendum | A-1 |
| Physical Setting Source Summary | A-2 |
| Physical Setting Source Map | A-8 |
| Physical Setting Source Map Findings | A-9 |
| Physical Setting Source Records Searched | PSGR-1 |


***Thank you for your business.***
Please contact EDR at 1-800-352-0050
with any questions or comments.


**Disclaimer - Copyright and Trademark Notice**

This Report contains certain information obtained from a variety of public and other sources reasonably available to Environmental Data Resources, Inc. It cannot be concluded from this Report that coverage information for the target and surrounding properties does not exist from other sources. **NO WARRANTY EXPRESSED OR IMPLIED, IS MADE WHATSOEVER IN CONNECTION WITH THIS REPORT. ENVIRONMENTAL DATA RESOURCES, INC. SPECIFICALLY DISCLAIMS THE MAKING OF ANY SUCH WARRANTIES, INCLUDING WITHOUT LIMITATION, MERCHANTABILITY OR FITNESS FOR A PARTICULAR USE OR PURPOSE. ALL RISK IS ASSUMED BY THE USER. IN NO EVENT SHALL ENVIRONMENTAL DATA RESOURCES, INC. BE LIABLE TO ANYONE, WHETHER ARISING OUT OF ERRORS OR OMISSIONS, NEGLIGENCE, ACCIDENT OR ANY OTHER CAUSE, FOR ANY LOSS OF DAMAGE, INCLUDING, WITHOUT LIMITATION, SPECIAL, INCIDENTAL, CONSEQUENTIAL, OR EXEMPLARY DAMAGES. ANY LIABILITY ON THE PART OF ENVIRONMENTAL DATA RESOURCES, INC. IS STRICTLY LIMITED TO A REFUND OF THE AMOUNT PAID FOR THIS REPORT.** Purchaser accepts this Report "AS IS". Any analyses, estimates, ratings, environmental risk levels or risk codes provided in this Report are provided for illustrative purposes only, and are not intended to provide, nor should they be interpreted as providing any facts regarding, or prediction or forecast of, any environmental risk for any property. Only a Phase I Environmental Site Assessment performed by an environmental professional can provide information regarding the environmental risk for any property. Additionally, the information provided in this Report is not to be construed as legal advice.

Copyright 2016 by Environmental Data Resources, Inc. All rights reserved. Reproduction in any media or format, in whole or in part, of any report or map of Environmental Data Resources, Inc., or its affiliates, is prohibited without prior written permission.

EDR and its logos (including Sanborn and Sanborn Map) are trademarks of Environmental Data Resources, Inc. or its affiliates. All other trademarks used herein are the property of their respective owners.

# EXECUTIVE SUMMARY

A search of available environmental records was conducted by Environmental Data Resources, Inc (EDR). The report was designed to assist parties seeking to meet the search requirements of EPA's Standards and Practices for All Appropriate Inquiries (40 CFR Part 312), the ASTM Standard Practice for Environmental Site Assessments (E 1527-13) or custom requirements developed for the evaluation of environmental risk associated with a parcel of real estate.

**TARGET PROPERTY INFORMATION**

**ADDRESS**

800 AIR WAY
GLENDALE, CA 91201

**COORDINATES**

| | |
|---|---|
| Latitude (North): | 34.1555360 - 34˚ 9' 19.92'' |
| Longitude (West): | 118.2780930 - 118˚ 16' 41.13'' |
| Universal Tranverse Mercator: | Zone 11 |
| UTM X (Meters): | 382180.1 |
| UTM Y (Meters): | 3779944.8 |
| Elevation: | 468 ft. above sea level |

**USGS TOPOGRAPHIC MAP ASSOCIATED WITH TARGET PROPERTY**

| | |
|---|---|
| Target Property Map: | 5630791 BURBANK, CA |
| Version Date: | 2012 |

**AERIAL PHOTOGRAPHY IN THIS REPORT**

| | |
|---|---|
| Portions of Photo from: | 20140515 |
| Source: | USDA |

## MAPPED SITES SUMMARY

Target Property Address:
800 AIR WAY
GLENDALE, CA 91201

Click on Map ID to see full detail.

| MAP ID | SITE NAME | ADDRESS | DATABASE ACRONYMS | RELATIVE ELEVATION | DIST (ft. & mi.) DIRECTION |
|---|---|---|---|---|---|
| A1 | GRAYSON POWER PLANT | 800 AIR WAY | RMP | | TP |
| A2 | GLENDALE PUBLIC SERV | 800 AIR WAY | ENVIROSTOR, HIST UST, CHMIRS, NPDES | | TP |
| A3 | GWP UTILITY OPERATIO | 800 AIR WAY | RMP | | TP |
| A4 | | 800 AIRWAYS ST. | CHMIRS | | TP |
| A5 | GLENDALE CITY,PUBLIC | 800 AIR WAY | US AIRS | | TP |
| A6 | LOS ANGELES COUNTY S | 800 AIR WAY | HAZNET | | TP |
| A7 | GRAYSON POWER PLANT | 800 AIRWAY | SLIC, SWEEPS UST, CA FID UST, EMI, WIP | | TP |
| A8 | GLENDALE CITY, PUBLI | 800 AIR WAY | SWEEPS UST, CA FID UST, EMI | | TP |
| A9 | GRAYSON POWER PLANT | 800 AIR WAY | HIST UST | | TP |
| A10 | GLENDALE CITY OF PUB | 800 AIRWAY ST | HAZNET | | TP |
| A11 | GRAYSON POWER PLANT | 800 AIR WAY | RGA LUST | | TP |
| A12 | GWP UTILITY OPERATIO | 800 AIR WAY | FINDS, ECHO | | TP |
| A13 | GLENDALE CITY, GLEND | 800 AIR WAY | SWEEPS UST, EMI, LOS ANGELES CO. HMS | | TP |
| A14 | GRAYSON POWER PLANT | 800 AIR WY | RGA LUST | | TP |
| A15 | CITY OF GLENDALE | 800 AIRWAY ST | SEMS-ARCHIVE, RCRA-SQG | | TP |
| Reg | SAN FERNANDO VALLEY | CRYSTAL SPRINGS WELL | NPL, SEMS, US ENG CONTROLS, ENVIROSTOR, HIST... | Same | 1 ft. |
| B16 | KELLOGG AVENUE DUMP- | 630 KELLOGG AVENUE | WMUDS/SWAT | Higher | 16, 0.003, NNW |
| B17 | GRAYSON POWER PLANT | 634 BEKINS | SWEEPS UST, CA FID UST | Higher | 70, 0.013, NNW |
| B18 | GLENDALE CITY, PUBLI | 634 BEKINS WAY | LUST, EMI, HIST CORTESE, WDS | Higher | 70, 0.013, NNW |
| B19 | GLENDALE ENVELOPE IN | 807 AIRWAY | WIP | Lower | 90, 0.017, NNW |
| B20 | | 811 AIR WAY | EDR Hist Auto | Lower | 112, 0.021, NNW |
| B21 | M & R MACHINE | 811 AIR WAY | RCRA-SQG, FINDS, ECHO | Lower | 112, 0.021, NNW |
| B22 | M & R MACHINE INC. | 811 AIRWAY | WIP | Lower | 112, 0.021, NNW |
| 23 | LUIGI' POTTERY & GAR | 5630 SAN FERNANDO RD | WIP | Lower | 155, 0.029, ESE |
| C24 | T C GULF SERVICE | 5700 SAN FERNANDO | EDR Hist Auto | Higher | 164, 0.031, ENE |
| C25 | 99174 | 5700 SAN FERNANDO RD | HIST UST | Higher | 164, 0.031, ENE |
| C26 | KING FISH AUTO LAUND | 5720 SAN FERNANDO | EDR Hist Auto | Higher | 169, 0.032, NE |
| C27 | GALLERIA CAR WASH | 5720 SAN FERNANDO RD | WIP | Higher | 169, 0.032, NE |
| D28 | HALL S UNION SERVICE | 5744 SAN FERNANDO | EDR Hist Auto | Higher | 174, 0.033, NNE |
| D29 | GRAYSON POWER PLANT | 5750 SAN FERNANDO RD | LUST, HIST CORTESE | Higher | 193, 0.037, NNE |
| D30 | BARGAIN GAS | 5800 SAN FERNANDO RD | HIST UST | Higher | 268, 0.051, North |
| D31 | HIGHLAND ARCO | 5800 SAN FERNANDO | LUST, HIST CORTESE | Higher | 268, 0.051, North |
| D32 | EMILIO S GULF SERVIC | 5800 SAN FERNANDO | EDR Hist Auto | Higher | 268, 0.051, North |
| D33 | FORMER EMILIO'S AUTO | 5800 SAN FERNANDO RD | LUST, WIP | Higher | 268, 0.051, North |
| D34 | BARGIN GAS | 5800 SAN FERNANDO RD | SWEEPS UST, LOS ANGELES CO. HMS | Higher | 268, 0.051, North |
| E35 | ARMSTRONG GARDEN CEN | 5816 SAN FERNANDO RD | SLIC, ENF, WIP | Higher | 285, 0.054, North |
| 36 | AUDERCO CARPET | 847 AIRWAY | ENF, WIP | Lower | 310, 0.059, NNW |
| E37 | JAMES R. TIPPS | 5830 SAN FERNANDO RD | WIP | Higher | 371, 0.070, North |
| E38 | | 5830 SAN FERNANDO R | EDR Hist Auto | Higher | 371, 0.070, North |

MAPPED SITES SUMMARY

Target Property Address:
800 AIR WAY
GLENDALE, CA 91201

Click on Map ID to see full detail.

| MAP ID | SITE NAME | ADDRESS | DATABASE ACRONYMS | RELATIVE ELEVATION | DIST (ft. & mi.) DIRECTION |
|---|---|---|---|---|---|
| F39 | CONTEMPORARY COMPUTE | 5838 SAN FERNANDO RD | WIP | Higher | 447, 0.085, North |
| F40 | CONTEMPORAY COMPUTER | 5838 SAN FERNANDO RD | WIP | Higher | 447, 0.085, North |
| F41 | MD PRINTING (FORMERL | 5838 SAN FERNANDO RD | WIP | Higher | 447, 0.085, North |
| F42 | LOVE GIFT INTER LTD/ | 5838 SAN FERNANDO RD | WIP | Higher | 447, 0.085, North |
| F43 | R-SQUARED SCAN SYSTE | 5838 SAN FERNANDO RD | WIP | Higher | 447, 0.085, North |
| E44 | GLENDALE TRANSMISSIO | 5832 SAN FERNANDO | EDR Hist Auto | Higher | 462, 0.087, North |
| E45 | TRI-STAR MOTORS | 5832 SAN FERNANDO RD | WIP | Higher | 462, 0.087, North |
| G46 | GLENDALE ENV MGNT CT | 780 FLOWER ST | RCRA-SQG, CDL, FINDS, HAZNET, HWT, ECHO | Lower | 487, 0.092, NW |
| F47 | ANGELUS PET HOSPITAL | 5846 SAN FERNANDO RD | WIP | Higher | 498, 0.094, NNW |
| G48 | THE BEKINS CO. | 777 S FLOWER ST | WIP | Lower | 539, 0.102, NW |
| G49 | PRUDENTIAL INSURANCE | 900 GRAND CENTRAL AV | WIP | Lower | 543, 0.103, NW |
| F50 | KIEV RADIO 870 AM | 5900 SAN FERNANDO RD | WIP | Higher | 572, 0.108, NNW |
| H51 | | 4552 DORAN ST | EDR Hist Auto | Lower | 608, 0.115, SSE |
| H52 | | 4550 DORAN ST | EDR Hist Auto | Lower | 609, 0.115, SSE |
| I53 | PACIFIC PLASTICS DES | 911 AIRWAY | WIP | Lower | 747, 0.141, NNW |
| I54 | SPERRY ELECTRIC INC | 915 AIR WAY | HIST UST | Lower | 773, 0.146, NNW |
| I55 | MONTEREY TOW SERVICE | 915 AIRWAY | WIP | Lower | 773, 0.146, NNW |
| I56 | MONTEREY TOW | 915 AIR WY | LUST | Lower | 773, 0.146, NNW |
| I57 | MONTEREY TOW | 915 AIR WY | LUST, HIST CORTESE | Lower | 773, 0.146, NNW |
| I58 | GLENAIR, INC. | 920 AIR WAY | SLIC | Lower | 774, 0.147, NW |
| I59 | GLENAIR INC. | 920 AIRWAY | WIP | Lower | 774, 0.147, NW |
| J60 | CENTRAL SCREEN CO. | 5914 SAN FERNANDO RD | WIP | Higher | 790, 0.150, NNW |
| K61 | MOULDER BROS | 955 W DORAN ST | HIST UST | Higher | 811, 0.154, SE |
| I62 | GLENAIR INC. | 930 AIRWAY | WIP | Lower | 826, 0.156, NW |
| K63 | CALTRANS DORAN ST | 943 DORAN ST | RCRA-SQG, FINDS, ECHO | Higher | 826, 0.156, SE |
| K64 | CITY OF GLENDALE WAS | 976 W DORAN ST | SWEEPS UST, HIST UST | Higher | 826, 0.156, SE |
| L65 | SOUTH COAST FIBERS I | 5487 W SAN FERNANDO | SWRCY | Lower | 850, 0.161, SSE |
| L66 | SOUTH COAST RECYCLIN | 4560 DORAN ST | WDS, WIP | Lower | 850, 0.161, SSE |
| L67 | AAA PAPER STOCK COMP | 5487 SAN FERNANDO RD | SWEEPS UST, CA FID UST | Lower | 850, 0.161, SSE |
| L68 | AAA PAPER STOCK COMP | 4560 DORAN ST | SWEEPS UST, CA FID UST, EMI | Lower | 850, 0.161, SSE |
| L69 | AMERICAN RECLAMATION | 4560 DORAN ST | SWF/LF | Lower | 850, 0.161, SSE |
| L70 | SELLARS PRODUCTS, IN | 4520 W DORAN ST | WIP | Lower | 850, 0.161, SSE |
| L71 | SOUTH COAST RECYCLIN | 5487 W SAN FERNANDO | WIP | Lower | 850, 0.161, SSE |
| L72 | SOUTH COAST RECYCLIN | 4560 DORAN ST | SWF/LF, LUST, LOS ANGELES CO. HMS, NPDES, LA Co.... | Lower | 850, 0.161, SSE |
| K73 | MOULDER BROTHERS | 905 W DORAN STREET | HIST UST | Higher | 880, 0.167, SE |
| M74 | HARRINGTON TOOLS | 5420-5440A-C WEST SA | SEMS, PRP | Lower | 884, 0.167, SE |
| M75 | L & W TRANSMISSIONS | 5440 W SAN FERNANDO | WIP | Lower | 884, 0.167, SE |
| M76 | ACTION FORKLIFT SERV | 5440 W SAN FERNANDO | WIP | Lower | 884, 0.167, SE |
| M77 | SUNLAND CHEMICAL & R | 5440 SAN FERNANDO RD | SWEEPS UST, CA FID UST, RCRA NonGen / NLR, HAZNET | Lower | 884, 0.167, SE |

MAPPED SITES SUMMARY

Target Property Address:
800 AIR WAY
GLENDALE, CA 91201

Click on Map ID to see full detail.

| MAP ID | SITE NAME | ADDRESS | DATABASE ACRONYMS | RELATIVE ELEVATION | DIST (ft. & mi.) DIRECTION |
|---|---|---|---|---|---|
| M78 | GLENDALE CARBURETORS | 5440 W SAN FERNANDO | WIP | Lower | 884, 0.167, SE |
| M79 | SUNLAND CHEMICAL AND | 5447 SAN FERNANDO RD | HIST UST, CHMIRS, WDS, WIP | Lower | 884, 0.167, SE |
| M80 | SHIRMAR TRUCKING | 5440 SAN FERNANDO RD | RCRA NonGen / NLR, FINDS, ECHO | Lower | 884, 0.167, SE |
| M81 | SUNLAND CHEMICAL | 5440A-C W SAN FERNAN | SEMS, PRP | Lower | 884, 0.167, SE |
| M82 | MTA VERMICULITE RAIL | 5440 W SAN FERNANDO | SEMS, PRP, LEAD SMELTERS | Lower | 884, 0.167, SE |
| I83 | DRAWSTRINGS | 933 AIRWAY | WIP | Lower | 896, 0.170, NNW |
| I84 | GLENAIR INC | 944 AIRWAY | CHMIRS, WIP | Lower | 899, 0.170, NW |
| M85 | JOE OF CALIFORNIA, I | 5476 W SAN FERNANDO | WIP | Lower | 905, 0.171, SE |
| J86 | CALIF. ELECTRICAL SE | 5924 SAN FERNANDO RD | WIP | Higher | 906, 0.172, NNW |
| J87 | ASSOCIATED INSTRUMEN | 5930 SAN FERNANDO RD | WIP | Higher | 918, 0.174, NNW |
| J88 | WALNUT CABINET SHOP | 5932 SAN FERNANDO RD | WIP | Higher | 921, 0.174, NNW |
| K89 | DAYHAN ELECTRONICS | 5524 SAN FERNANDO RD | WIP | Higher | 929, 0.176, SE |
| I90 | THE J P WEAVER CO | 941 AIRWAY | WIP | Lower | 950, 0.180, NNW |
| M91 | AIRCO ENGINEERING, I | 5471 W SAN FERNANDO | SWEEPS UST, CA FID UST, WIP | Lower | 957, 0.181, SSE |
| M92 | SEAVAN TRUCK LINES | 5470 W SAN FERNANDO | WIP | Lower | 957, 0.181, SE |
| M93 | RIO COFFEE | 5469 W SAN FERNANDO | WIP | Lower | 973, 0.184, SSE |
| I94 | LASER MARK-IT | 945 AIRWAY | WIP | Lower | 978, 0.185, NNW |
| M95 | UNK | 5467 W SAN FERNANDO | SWEEPS UST, CA FID UST, WDS | Lower | 990, 0.188, SSE |
| 96 | SOUTHERN CALIFORNIA | 805 FAIRMONT AVE | RCRA-SQG | Higher | 992, 0.188, East |
| N97 | ECONOMY PACKAGING | 907 FLOWER ST | HIST UST | Lower | 1005, 0.190, WNW |
| N98 | TONYS EXPRESS INC | 907 FLOWER ST | HIST UST | Lower | 1005, 0.190, WNW |
| J99 | UNITED BODY SHOP | 5938 SAN FERNANDO RD | EMI, WIP | Higher | 1014, 0.192, NNW |
| O100 | DIGITAL PRESS | 951 AIR WAY | WIP | Lower | 1018, 0.193, NW |
| K101 | GENERAL AIRCRAFT CO. | 5514 SAN FERNANDO RD | WIP | Higher | 1026, 0.194, SE |
| P102 | SUNLAND, INC./MACDER | 5439 SAN FERNANDO RO | SEMS-ARCHIVE, CORRACTS, RCRA-SQG, ENVIROSTOR, HIST | Lower | 1079, 0.204, SSE |
| P103 | MACDERMID, INC. | 5439 SAN FERNANDO RD | WIP | Lower | 1079, 0.204, SSE |
| Q104 | R. A. FISCHER | 517 COMMERCIAL ST | WIP | Higher | 1108, 0.210, SE |
| Q105 | DAYHAN ELECTRONICS | 5524 W SAN FERNANDO | WIP | Higher | 1123, 0.213, SE |
| R106 | GREY-HOUND BUS | 6000 SAN FERNANDO RD | WIP | Higher | 1133, 0.215, NNW |
| S107 | CALTRANS | 1011 GRAND CENTRAL A | WIP | Lower | 1155, 0.219, NW |
| M108 | SUNLAND CHEMICAL | 5447 WEST SAN FERNAN | ENVIROSTOR, VCP | Lower | 1159, 0.220, SSE |
| S109 | AGFA CORPORATION | 1014 GRAND CENTRAL A | RCRA NonGen / NLR, FINDS, ECHO | Lower | 1174, 0.222, NW |
| S110 | METACOMET INC | 1014 GRAND CENTRAL A | EMI, WIP | Lower | 1174, 0.222, NW |
| R111 | ONTARIO REFRIGERATIO | 6002 SAN FERNANDO RD | WIP | Higher | 1190, 0.225, NNW |
| T112 | COLLISON | 5500 SAN FERNANDO RD | LA Co. Site Mitigation, WIP | Higher | 1193, 0.226, SE |
| Q113 | SOUND CONTROL | 526 COMMERCIAL ST | WIP | Higher | 1198, 0.227, ESE |
| O114 | INDO-EUROPEAN FOODS, | 1000 AIRWAY | ENF, WIP | Higher | 1199, 0.227, NW |
| Q115 | KENNEDY HYDRAULICS | 521 COMMERCIAL ST | SWEEPS UST, HIST UST, LOS ANGELES CO. HMS | Higher | 1205, 0.228, SE |
| Q116 | CARL J KENNEDY CO, I | 521 COMMERCIAL ST | RCRA-SQG, FINDS, ECHO | Higher | 1205, 0.228, SE |

MAPPED SITES SUMMARY

Target Property Address:
800 AIR WAY
GLENDALE, CA 91201

Click on Map ID to see full detail.

| MAP ID | SITE NAME | ADDRESS | DATABASE ACRONYMS | RELATIVE ELEVATION | DIST (ft. & mi.) DIRECTION |
|---|---|---|---|---|---|
| R117 | EASTERN CONTRACTORS, | 6004 SAN FERNANDO RD | WIP | Higher | 1208, 0.229, NNW |
| T118 | SUNLAND CHEMICAL AND | 5440 SAN FERNANDO RD | HIST UST, HAZNET | Lower | 1214, 0.230, SSE |
| N119 | L. A. WATER & POWER | 1000 S FLOWER ST | WIP | Lower | 1222, 0.231, WNW |
| N120 | GLENDALE WATER & POW | 1000 FLOWER ST | HIST UST, HAZNET | Lower | 1222, 0.231, WNW |
| R121 | PACIFIC RIM ADMINIST | 6006 SAN FERNANDO RD | WIP | Higher | 1227, 0.232, NNW |
| R122 | MASTERS CONTRACTING | 6006 SAN FERNANDO RD | WIP | Higher | 1227, 0.232, NNW |
| R123 | GEORGE HOPKINS CONST | 6006 SAN FERNANDO RD | SWEEPS UST, LOS ANGELES CO. HMS | Higher | 1227, 0.232, NNW |
| R124 | MR FENCE INC | 6006 SAN FERNANDO RD | HIST UST | Higher | 1227, 0.232, NNW |
| S125 | DELSEN TESTING LABOR | 1024 GRAND CENTRAL A | SLIC, ENF, HAZNET, WIP | Lower | 1230, 0.233, NW |
| S126 | PRUDENTIAL INSURANCE | 1025 GRAND CENTRAL A | WIP | Lower | 1233, 0.234, NW |
| R127 | VIDEO CENTER | 6008 SAN FERNANDO RD | WIP | Higher | 1245, 0.236, NNW |
| Q128 | MAT SOURCE | 516 COMMERCIAL ST | WIP | Higher | 1262, 0.239, SE |
| R129 | M & M SHOP | 6010 SAN FERNANDO RD | WIP | Higher | 1263, 0.239, NNW |
| Q130 | FABRIC FLAMEPROOFING | 835 MILFORD ST | RCRA-SQG | Higher | 1272, 0.241, SE |
| Q131 | FABRIC FLAMEPROOFING | 835 W MILFORD ST | WIP | Higher | 1272, 0.241, SE |
| U132 | ACTIVE SUPPLY CO. | 5433 SAN FERNANDO RO | RCRA-LQG | Lower | 1277, 0.242, SSE |
| U133 | ACTIVE WINDOW PRODUC | 5431 W SAN FERNANDO | WIP | Lower | 1294, 0.245, SSE |
| T134 | PRODUCTS RESEARCH & | 5430 SAN FERNANDO | HIST CORTESE | Lower | 1300, 0.246, SSE |
| V135 | HOWARD DEVELOPEMENT | 800 W DORAN ST | SWEEPS UST, LOS ANGELES CO. HMS | Higher | 1301, 0.246, ESE |
| V136 | VIVA CONCEPTS LLC | 800 W DORAN ST | HIST UST, HAZNET | Higher | 1301, 0.246, ESE |
| V137 | TITLE LAND COMPANY | 800 W DORAN ST | WIP | Higher | 1301, 0.246, ESE |
| 138 | BEZJIAN | 1020 AIRWAY | WIP | Higher | 1310, 0.248, NW |
| 139 | ALANDALE INS. AGENCY | 750 FAIRMONT AVE | WIP | Higher | 1311, 0.248, East |
| 140 | J.J. CHEROKEE | 815 W MILFORD ST | SLIC, WIP | Higher | 1490, 0.282, SE |
| 141 | STATE GUARD AIR FIEL | | ENVIROSTOR | Lower | 1513, 0.287, WSW |
| 142 | HYBRID SYSEMS (FORME | 6040 SAN FERNANDO RD | SLIC, WIP | Higher | 1534, 0.291, NNW |
| W143 | E.L. FLEMMING DUMP | 5431 SAN FERNANDO RD | SWF/LF | Higher | 1576, 0.298, SE |
| W144 | PRC-DESOTO INTERNATI | 5430 SAN FERNANDO RO | ENF, LOS ANGELES CO. HMS, Notify 65, WIP | Higher | 1741, 0.330, SE |
| W145 | PRODUCTS RESEARCH & | 5430 SAN FERNANDO RD | LUST, SLIC | Higher | 1741, 0.330, SE |
| W146 | PRC-DESOTO INTERNATI | 5430-5454 SAN FERNAN | SEMS | Higher | 1741, 0.330, SE |
| 147 | WALT DISNEY COMPANY | 1100 GRAND CENTRAL A | SLIC, WIP | Lower | 1748, 0.331, NW |
| X148 | MOBIL #18-GGL | 900 GLENOAKS BLVD W | LUST | Higher | 1780, 0.337, NNE |
| X149 | MOBIL #18-GGL | 900 GLENOAKS | HIST CORTESE | Higher | 1780, 0.337, NNE |
| 150 | SEPULVEDA ANG - SEPU | | LUST, MCS | Higher | 1930, 0.366, NNW |
| Y151 | PACER | 5341 W. SAN FERNANDO | SLIC | Lower | 2002, 0.379, SSE |
| Y152 | ADMIRAL CONTROLS INC | 4516 CUTTER ST | SEMS-ARCHIVE, RCRA NonGen / NLR, FINDS, WIP, ECHO | Lower | 2060, 0.390, SSE |
| 153 | GRAND CENTRAL AIRPOR | 1101 AIR WAY | SWF/LF | Higher | 2068, 0.392, NW |
| Z154 | GLENDALE FEDERAL BAN | 1100 FRANCES CT. | SLIC, WIP | Lower | 2147, 0.407, WNW |
| Z155 | APPLIED GRAPHICS | 601 RODIER DR | SLIC, RCRA NonGen / NLR, FINDS, EMI, HAZNET, WIP,... | Lower | 2341, 0.443, WNW |

## MAPPED SITES SUMMARY

Target Property Address:
800 AIR WAY
GLENDALE, CA 91201

Click on Map ID to see full detail.

| MAP ID | SITE NAME | ADDRESS | DATABASE ACRONYMS | RELATIVE ELEVATION | DIST (ft. & mi.) DIRECTION |
|---|---|---|---|---|---|
| 156 | M&T CHEM/FURANE PROD | 4600 SPERRY ST | SEMS-ARCHIVE | Lower | 2376, 0.450, SSE |
| 157 | WALT DISNEY COMPANY | 530 RODIER DR. | SLIC | Lower | 2423, 0.459, WNW |
| 158 | SOCAL GAS | 4555 SPERRY ST. | SLIC, HIST UST | Lower | 2450, 0.464, SSE |
| 159 | KEN'S BROACHING | 747 SALEM ST. | SLIC, WIP | Higher | 2628, 0.498, SE |
| AA160 | BRAZIL STREET DEPOT | | ENVIROSTOR | Lower | 3010, 0.570, SSE |
| AA161 | LA DIST MAINT YARD | | ENVIROSTOR | Lower | 3106, 0.588, SSE |
| 162 | GRAND CENTRAL AIR TE | | FUDS | Higher | 3307, 0.626, NW |
| AB163 | DRILUBE COMPANY | 723 WEST BROADWAY | ENVIROSTOR | Higher | 3431, 0.650, SE |
| AB164 | DRILUBE CO | 711 W. BROADWAY | SEMS-ARCHIVE, RCRA-SQG, ENVIROSTOR, SLIC, ICIS,... | Higher | 3512, 0.665, SE |
| AB165 | KEN'S BROACHING | 702 WEST BROADWAY | ENVIROSTOR | Higher | 3577, 0.677, SE |
| AC166 | MEPCO CENTRALAB INC. | 4561 COLORADO BLVD. | RCRA-SQG, ENVIROSTOR, LUST, SWEEPS UST, HIST UST,.. | Lower | 4078, 0.772, SSE |
| AC167 | CENTRALAB | 4561 COLORADO BLVD. | CHMIRS, CA BOND EXP. PLAN | Lower | 4078, 0.772, SSE |
| 168 | GCG CORP. | 608 RUBERTA AV | ENVIROSTOR, SLIC, EMI, ENF, NPDES | Higher | 4432, 0.839, WNW |
| AD169 | KINNER MOTORS | | FUDS | Higher | 4916, 0.931, SSE |
| AD170 | KINNER MOTORS | | ENVIROSTOR, Cortese | Higher | 4931, 0.934, SSE |
| AE171 | AIR PRODUCTS & CHEMI | 6505 SAN FERNANDO RO | ENVIROSTOR | Higher | 4980, 0.943, NW |
| AE172 | CINOVATION STUDIOS I | 6527 SAN FERNANDO RD | ENVIROSTOR, VCP, HIST UST, HAZNET | Higher | 5248, 0.994, NW |

# EXECUTIVE SUMMARY

**TARGET PROPERTY SEARCH RESULTS**

The target property was identified in the following records. For more information on this property see page 8 of the attached EDR Radius Map report:

| Site | Database(s) | EPA ID |
|---|---|---|
| GRAYSON POWER PLANT<br>800 AIR WAY<br>GLENDALE, CA 91201 | RMP | N/A |
| GLENDALE PUBLIC SERV<br>800 AIR WAY<br>GLENDALE, CA 91201 | ENVIROSTOR<br>Facility Id: 19490185<br>Status: Refer: Other Agency<br><br>HIST UST<br>Facility Id: 00000020659<br><br>CHMIRS<br>OES Incident Number: 8-4155<br><br>NPDES<br>Facility Status: Active | N/A |
| GWP UTILITY OPERATIO<br>800 AIR WAY<br>GLENDALE, CA 91201 | RMP | N/A |
| 800 AIRWAYS ST.<br>800 AIRWAYS ST.<br>GLENDALE, CA | CHMIRS<br>OES Incident Number: 6-6843 | N/A |
| GLENDALE CITY,PUBLIC<br>800 AIR WAY<br>GLENDALE, CA 91201 | US AIRS<br>EPA plant ID:: 110013829330 | N/A |
| LOS ANGELES COUNTY S<br>800 AIR WAY<br>GLENDALE, CA 91201 | HAZNET<br>GEPAID: CAH777000751 | N/A |
| GRAYSON POWER PLANT<br>800 AIRWAY<br>GLENDALE, CA 91201 | SLIC<br>Facility Status: Completed - Case Closed<br>Global Id: SL603798950<br><br>SWEEPS UST<br>Status: A<br>Tank Status: A<br>Comp Number: 1<br><br>CA FID UST<br>Facility Id: 19010743 | N/A |

| | | |
|---|---|---|
| | Status: A<br>EMI<br>Facility Id: 24957<br>WIP<br>Facility Status: Backlog | |
| GLENDALE CITY, PUBLI<br>800 AIR WAY<br>GLENDALE, CA 91201 | SWEEPS UST<br>Status: A<br>Tank Status: A<br>Comp Number: 10433<br>Comp Number: 11620<br>CA FID UST<br>Facility Id: 19001552<br>Status: A<br>EMI<br>Facility Id: 800327<br>Facility Id: 24957 | N/A |
| GRAYSON POWER PLANT<br>800 AIR WAY<br>GLENDALE, CA 91201 | HIST UST<br>Facility Id: 00000020660 | N/A |
| GLENDALE CITY OF PUB<br>800 AIRWAY ST<br>GLENDALE, CA 91201 | HAZNET<br>GEPAID: CAD980735864 | N/A |
| GRAYSON POWER PLANT<br>800 AIR WAY<br>GLENDALE, CA | RGA LUST | N/A |
| GWP UTILITY OPERATIO<br>800 AIR WAY<br>GLENDALE, CA 91201 | FINDS<br>Registry ID:: 110013829330<br>ECHO | N/A |
| GLENDALE CITY, GLEND<br>800 AIR WAY<br>GLENDALE, CA 91201 | SWEEPS UST<br>Status: A<br>Comp Number: 13086<br>EMI<br>Facility Id: 800327<br>LOS ANGELES CO. HMS<br>Facility ID: 010504-010433<br>Facility ID: 010504-013086 | N/A |
| GRAYSON POWER PLANT<br>800 AIR WY<br>GLENDALE, CA | RGA LUST | N/A |

# EXECUTIVE SUMMARY

CITY OF GLENDALE
800 AIRWAY ST
GLENDALE, CA 91201

SEMS-ARCHIVE
Site ID: 0901992
EPA Id: CAD980735864

RCRA-SQG
EPA ID:: CAD980735864

CAD980735864

**DATABASES WITH NO MAPPED SITES**

No mapped sites were found in EDR's search of available ("reasonably ascertainable ") government records either on the target property or within the search radius around the target property for the following databases:

**STANDARD ENVIRONMENTAL RECORDS**

***Federal NPL site list***

Proposed NPL..... Proposed National Priority List Sites
NPL LIENS..... Federal Superfund Liens

***Federal Delisted NPL site list***

Delisted NPL..... National Priority List Deletions

***Federal CERCLIS list***

FEDERAL FACILITY..... Federal Facility Site Information listing

***Federal RCRA non-CORRACTS TSD facilities list***

RCRA-TSDF..... RCRA - Treatment, Storage and Disposal

***Federal RCRA generators list***

RCRA-CESQG..... RCRA - Conditionally Exempt Small Quantity Generator

***Federal institutional controls / engineering controls registries***

LUCIS..... Land Use Control Information System
US INST CONTROL..... Sites with Institutional Controls

***Federal ERNS list***

ERNS..... Emergency Response Notification System

***State- and tribal - equivalent NPL***

RESPONSE..... State Response Sites

***State and tribal leaking storage tank lists***

INDIAN LUST..... Leaking Underground Storage Tanks on Indian Land

# EXECUTIVE SUMMARY

***State and tribal registered storage tank lists***

FEMA UST..... Underground Storage Tank Listing
UST..... Active UST Facilities
AST..... Aboveground Petroleum Storage Tank Facilities
INDIAN UST..... Underground Storage Tanks on Indian Land

***State and tribal voluntary cleanup sites***

INDIAN VCP..... Voluntary Cleanup Priority Listing

***State and tribal Brownfields sites***

BROWNFIELDS..... Considered Brownfieds Sites Listing

**ADDITIONAL ENVIRONMENTAL RECORDS**

***Local Brownfield lists***

US BROWNFIELDS..... A Listing of Brownfields Sites

***Local Lists of Landfill / Solid Waste Disposal Sites***

HAULERS..... Registered Waste Tire Haulers Listing
INDIAN ODI..... Report on the Status of Open Dumps on Indian Lands
DEBRIS REGION 9..... Torres Martinez Reservation Illegal Dump Site Locations
ODI..... Open Dump Inventory

***Local Lists of Hazardous waste / Contaminated Sites***

US HIST CDL..... Delisted National Clandestine Laboratory Register
AOCONCERN..... San Gabriel Valley Areas of Concern
SCH..... School Property Evaluation Program
CDL..... Clandestine Drug Labs
Toxic Pits..... Toxic Pits Cleanup Act Sites
US CDL..... National Clandestine Laboratory Register

***Local Land Records***

LIENS..... Environmental Liens Listing
LIENS 2..... CERCLA Lien Information
DEED..... Deed Restriction Listing

***Records of Emergency Release Reports***

HMIRS..... Hazardous Materials Information Reporting System
LDS..... Land Disposal Sites Listing
MCS..... Military Cleanup Sites Listing
SPILLS 90..... SPILLS 90 data from FirstSearch

***Other Ascertainable Records***

DOD..... Department of Defense Sites

| | |
|---|---|
| SCRD DRYCLEANERS | State Coalition for Remediation of Drycleaners Listing |
| US FIN ASSUR | Financial Assurance Information |
| EPA WATCH LIST | EPA WATCH LIST |
| 2020 COR ACTION | 2020 Corrective Action Program List |
| TSCA | Toxic Substances Control Act |
| TRIS | Toxic Chemical Release Inventory System |
| SSTS | Section 7 Tracking Systems |
| RAATS | RCRA Administrative Action Tracking System |
| PRP | Potentially Responsible Parties |
| PADS | PCB Activity Database System |
| ICIS | Integrated Compliance Information System |
| FTTS | FIFRA/ TSCA Tracking System - FIFRA (Federal Insecticide, Fungicide, & Rodenticide Act)/TSCA (Toxic Substances Control Act) |
| MLTS | Material Licensing Tracking System |
| COAL ASH DOE | Steam-Electric Plant Operation Data |
| COAL ASH EPA | Coal Combustion Residues Surface Impoundments List |
| PCB TRANSFORMER | PCB Transformer Registration Database |
| RADINFO | Radiation Information Database |
| HIST FTTS | FIFRA/TSCA Tracking System Administrative Case Listing |
| DOT OPS | Incident and Accident Data |
| CONSENT | Superfund (CERCLA) Consent Decrees |
| INDIAN RESERV | Indian Reservations |
| FUSRAP | Formerly Utilized Sites Remedial Action Program |
| UMTRA | Uranium Mill Tailings Sites |
| LEAD SMELTERS | Lead Smelter Sites |
| US MINES | Mines Master Index File |
| UXO | Unexploded Ordnance Sites |
| DOCKET HWC | Hazardous Waste Compliance Docket Listing |
| CUPA Listings | CUPA Resources List |
| DRYCLEANERS | Cleaner Facilities |
| ENF | Enforcement Action Listing |
| Financial Assurance | Financial Assurance Information Listing |
| MINES | Mines Site Location Listing |
| MWMP | Medical Waste Management Program Listing |
| PEST LIC | Pesticide Regulation Licenses Listing |
| PROC | Certified Processors Database |
| LA Co. Site Mitigation | Site Mitigation List |
| UIC | UIC Listing |
| WASTEWATER PITS | Oil Wastewater Pits Listing |
| WDS | Waste Discharge System |
| FUELS PROGRAM | EPA Fuels Program Registered Listing |

**EDR HIGH RISK HISTORICAL RECORDS**

***EDR Exclusive Records***

| | |
|---|---|
| EDR MGP | EDR Proprietary Manufactured Gas Plants |
| EDR Hist Cleaner | EDR Exclusive Historic Dry Cleaners |

**EDR RECOVERED GOVERNMENT ARCHIVES**

***Exclusive Recovered Govt. Archives***

| | |
|---|---|
| RGA LF | Recovered Government Archive Solid Waste Facilities List |

# EXECUTIVE SUMMARY

**SURROUNDING SITES: SEARCH RESULTS**

Surrounding sites were identified in the following databases.

Elevations have been determined from the USGS Digital Elevation Model and should be evaluated on a relative (not an absolute) basis. Relative elevation information between sites of close proximity should be field verified. Sites with an elevation equal to or higher than the target property have been differentiated below from sites with an elevation lower than the target property.
Page numbers and map identification numbers refer to the EDR Radius Map report where detailed data on individual sites can be reviewed.

Sites listed in ***bold italics*** are in multiple databases.

Unmappable (orphan) sites are not considered in the foregoing analysis.

**STANDARD ENVIRONMENTAL RECORDS**

### *Federal NPL site list*

NPL: Also known as Superfund, the National Priority List database is a subset of CERCLIS and identifies over 1,200 sites for priority cleanup under the Superfund program. The source of this database is the U.S. EPA.

A review of the NPL list, as provided by EDR, and dated 03/07/2016 has revealed that there is 1 NPL site within approximately 1 mile of the target property.

| Equal/Higher Elevation | Address | Direction / Distance | Map ID | Page |
|---|---|---|---|---|
| ***SAN FERNANDO VALLEY*** | ***CRYSTAL SPRINGS WELL*** | ***0 - 1/8 (0.000 mi.)*** | ***0*** | ***71*** |

### *Federal CERCLIS list*

SEMS: SEMS (Superfund Enterprise Management System) tracks hazardous waste sites, potentially hazardous waste sites, and remedial activities performed in support of EPA's Superfund Program across the United States. The list was formerly know as CERCLIS, renamed to SEMS by the EPA in 2015. The list contains data on potentially hazardous waste sites that have been reported to the USEPA by states, municipalities, private companies and private persons, pursuant to Section 103 of the Comprehensive Environmental Response, Compensation, and Liability Act (CERCLA). This dataset also contains sites which are either proposed to or on the National Priorities List (NPL) and the sites which are in the screening and assessment phase for possible inclusion on the NPL.

A review of the SEMS list, as provided by EDR, and dated 03/07/2016 has revealed that there are 5 SEMS sites within approximately 0.5 miles of the target property.

| Equal/Higher Elevation | Address | Direction / Distance | Map ID | Page |
|---|---|---|---|---|
| ***SAN FERNANDO VALLEY*** | ***CRYSTAL SPRINGS WELL*** | ***0 - 1/8 (0.000 mi.)*** | ***0*** | ***71*** |
| PRC-DESOTO INTERNATI | 5430-5454 SAN FERNAN | SE 1/4 - 1/2 (0.330 mi.) | W146 | 254 |

| Lower Elevation | Address | Direction / Distance | Map ID | Page |
|---|---|---|---|---|
| ***HARRINGTON TOOLS*** | ***5420-5440A-C WEST SA*** | ***SE 1/8 - 1/4 (0.167 mi.)*** | ***M74*** | ***178*** |
| ***SUNLAND CHEMICAL*** | ***5440A-C W SAN FERNAN*** | ***SE 1/8 - 1/4 (0.167 mi.)*** | ***M81*** | ***190*** |
| ***MTA VERMICULITE RAIL*** | ***5440 W SAN FERNANDO*** | ***SE 1/8 - 1/4 (0.167 mi.)*** | ***M82*** | ***192*** |

# EXECUTIVE SUMMARY

### *Federal CERCLIS NFRAP site list*

SEMS-ARCHIVE: SEMS-ARCHIVE (Superfund Enterprise Management System Archive) tracks sites that have no further interest under the Federal Superfund Program based on available information. The list was formerly known as the CERCLIS-NFRAP, renamed to SEMS ARCHIVE by the EPA in 2015. EPA may perform a minimal level of assessment work at a site while it is archived if site conditions change and/or new information becomes available. Archived sites have been removed and archived from the inventory of SEMS sites. Archived status indicates that, to the best of EPA's knowledge, assessment at a site has been completed and that EPA has determined no further steps will be taken to list the site on the National Priorities List (NPL), unless information indicates this decision was not appropriate or other considerations require a recommendation for listing at a later time. The decision does not necessarily mean that there is no hazard associated with a given site; it only means that. based upon available information, the location is not judged to be potential NPL site.

A review of the SEMS-ARCHIVE list, as provided by EDR, and dated 03/07/2016 has revealed that there are 3 SEMS-ARCHIVE sites within approximately 0.5 miles of the target property.

| Lower Elevation | Address | Direction / Distance | Map ID | Page |
|---|---|---|---|---|
| ***SUNLAND, INC./MACDER*** | ***5439 SAN FERNANDO RO*** | ***SSE 1/8 - 1/4 (0.204 mi.)*** | ***P102*** | ***207*** |
| ***ADMIRAL CONTROLS INC*** | ***4516 CUTTER ST*** | ***SSE 1/4 - 1/2 (0.390 mi.)*** | ***Y152*** | ***266*** |
| M&T CHEM/FURANE PROD | 4600 SPERRY ST | SSE 1/4 - 1/2 (0.450 mi.) | 156 | 273 |

### *Federal RCRA CORRACTS facilities list*

CORRACTS: CORRACTS is a list of handlers with RCRA Corrective Action Activity. This report shows which nationally-defined corrective action core events have occurred for every handler that has had corrective action activity.

A review of the CORRACTS list, as provided by EDR, and dated 12/09/2015 has revealed that there is 1 CORRACTS site within approximately 1 mile of the target property.

| Lower Elevation | Address | Direction / Distance | Map ID | Page |
|---|---|---|---|---|
| ***SUNLAND, INC./MACDER*** | ***5439 SAN FERNANDO RO*** | ***SSE 1/8 - 1/4 (0.204 mi.)*** | ***P102*** | ***207*** |

### *Federal RCRA generators list*

RCRA-LQG: RCRAInfo is EPA's comprehensive information system, providing access to data supporting the Resource Conservation and Recovery Act (RCRA) of 1976 and the Hazardous and Solid Waste Amendments (HSWA) of 1984. The database includes selective information on sites which generate, transport, store, treat and/or dispose of hazardous waste as defined by the Resource Conservation and Recovery Act (RCRA). Large quantity generators (LQGs) generate over 1,000 kilograms (kg) of hazardous waste, or over 1 kg of acutely hazardous waste per month.

A review of the RCRA-LQG list, as provided by EDR, and dated 12/09/2015 has revealed that there is 1 RCRA-LQG site within approximately 0.25 miles of the target property.

| Lower Elevation | Address | Direction / Distance | Map ID | Page |
|---|---|---|---|---|
| ACTIVE SUPPLY CO. | 5433 SAN FERNANDO RO | SSE 1/8 - 1/4 (0.242 mi.) | U132 | 239 |

# EXECUTIVE SUMMARY

RCRA-SQG: RCRAInfo is EPA's comprehensive information system, providing access to data supporting the Resource Conservation and Recovery Act (RCRA) of 1976 and the Hazardous and Solid Waste Amendments (HSWA) of 1984. The database includes selective information on sites which generate, transport, store, treat and/or dispose of hazardous waste as defined by the Resource Conservation and Recovery Act (RCRA). Small quantity generators (SQGs) generate between 100 kg and 1,000 kg of hazardous waste per month.

A review of the RCRA-SQG list, as provided by EDR, and dated 12/09/2015 has revealed that there are 7 RCRA-SQG sites within approximately 0.25 miles of the target property.

| Equal/Higher Elevation | Address | Direction / Distance | Map ID | Page |
|---|---|---|---|---|
| ***CALTRANS DORAN ST*** | ***943 DORAN ST*** | ***SE 1/8 - 1/4 (0.156 mi.)*** | ***K63*** | ***163*** |
| SOUTHERN CALIFORNIA | 805 FAIRMONT AVE | E 1/8 - 1/4 (0.188 mi.) | 96 | 201 |
| ***CARL J KENNEDY CO, I*** | ***521 COMMERCIAL ST*** | ***SE 1/8 - 1/4 (0.228 mi.)*** | ***Q116*** | ***225*** |
| FABRIC FLAMEPROOFING | 835 MILFORD ST | SE 1/8 - 1/4 (0.241 mi.) | Q130 | 237 |

| Lower Elevation | Address | Direction / Distance | Map ID | Page |
|---|---|---|---|---|
| ***M & R MACHINE*** | ***811 AIR WAY*** | ***NNW 0 - 1/8 (0.021 mi.)*** | ***B21*** | ***129*** |
| ***GLENDALE ENV MGNT CT*** | ***780 FLOWER ST*** | ***NW 0 - 1/8 (0.092 mi.)*** | ***G46*** | ***152*** |
| ***SUNLAND, INC./MACDER*** | ***5439 SAN FERNANDO RO*** | ***SSE 1/8 - 1/4 (0.204 mi.)*** | ***P102*** | ***207*** |

### *Federal institutional controls / engineering controls registries*

US ENG CONTROLS: A listing of sites with engineering controls in place.

A review of the US ENG CONTROLS list, as provided by EDR, and dated 09/10/2015 has revealed that there is 1 US ENG CONTROLS site within approximately 0.5 miles of the target property.

| Equal/Higher Elevation | Address | Direction / Distance | Map ID | Page |
|---|---|---|---|---|
| ***SAN FERNANDO VALLEY*** | ***CRYSTAL SPRINGS WELL*** | ***0 - 1/8 (0.000 mi.)*** | ***0*** | ***71*** |

### *State- and tribal - equivalent CERCLIS*

ENVIROSTOR: The Department of Toxic Substances Control's (DTSC's) Site Mitigation and Brownfields Reuse Program's (SMBRP's) EnviroStor database identifes sites that have known contamination or sites for which there may be reasons to investigate further. The database includes the following site types: Federal Superfund sites (National Priorities List (NPL)); State Response, including Military Facilities and State Superfund; Voluntary Cleanup; and School sites. EnviroStor provides similar information to the information that was available in CalSites, and provides additional site information, including, but not limited to, identification of formerly-contaminated properties that have been released for reuse, properties where environmental deed restrictions have been recorded to prevent inappropriate land uses, and risk characterization information that is used to assess potential impacts to public health and the environment at contaminated sites.

A review of the ENVIROSTOR list, as provided by EDR, and dated 05/02/2016 has revealed that there are 14 ENVIROSTOR sites within approximately 1 mile of the target property.

| Equal/Higher Elevation | Address | Direction / Distance | Map ID | Page |
|---|---|---|---|---|
| ***SAN FERNANDO VALLEY*** | ***CRYSTAL SPRINGS WELL*** | ***0 - 1/8 (0.000 mi.)*** | ***0*** | ***71*** |
| Facility Id: 19990012 | | | | |

| | | | | |
|---|---|---|---|---|
| Status: Active | | | | |
| DRILUBE COMPANY<br>Facility Id: 19290258<br>Status: Refer: RWQCB | 723 WEST BROADWAY | SE 1/2 - 1 (0.650 mi.) | AB163 | 280 |
| ***DRILUBE CO***<br>Facility Id: 71002199<br>Status: Refer: Other Agency | ***711 W. BROADWAY*** | ***SE 1/2 - 1 (0.665 mi.)*** | ***AB164*** | ***281*** |
| KEN'S BROACHING<br>Facility Id: 19350447<br>Status: No Further Action | 702 WEST BROADWAY | SE 1/2 - 1 (0.677 mi.) | AB165 | 297 |
| ***GCG CORP.***<br>Facility Id: 71002489<br>Status: Refer: Other Agency | ***608 RUBERTA AV*** | ***WNW 1/2 - 1 (0.839 mi.)*** | ***168*** | ***312*** |
| ***KINNER MOTORS***<br>Facility Id: 80000163<br>Status: Active | | ***SSE 1/2 - 1 (0.934 mi.)*** | ***AD170*** | ***319*** |
| AIR PRODUCTS & CHEMI<br>Facility Id: 19281065<br>Status: No Further Action | 6505 SAN FERNANDO RO | NW 1/2 - 1 (0.943 mi.) | AE171 | 320 |
| ***CINOVATION STUDIOS I***<br>Facility Id: 60002252<br>Status: Active | ***6527 SAN FERNANDO RD*** | ***NW 1/2 - 1 (0.994 mi.)*** | ***AE172*** | ***322*** |

| Lower Elevation | Address | Direction / Distance | Map ID | Page |
|---|---|---|---|---|
| ***SUNLAND, INC./MACDER***<br>Facility Id: 80001650<br>Status: * Inactive | ***5439 SAN FERNANDO RO*** | ***SSE 1/8 - 1/4 (0.204 mi.)*** | ***P102*** | ***207*** |
| ***SUNLAND CHEMICAL***<br>Facility Id: 60002197<br>Status: Active | ***5447 WEST SAN FERNAN*** | ***SSE 1/8 - 1/4 (0.220 mi.)*** | ***M108*** | ***216*** |
| STATE GUARD AIR FIEL<br>Facility Id: 80000865<br>Status: Inactive - Needs Evaluation | | WSW 1/4 - 1/2 (0.287 mi.) | 141 | 244 |
| BRAZIL STREET DEPOT<br>Facility Id: 80000715<br>Status: No Further Action | | SSE 1/2 - 1 (0.570 mi.) | AA160 | 277 |
| LA DIST MAINT YARD<br>Facility Id: 80000287<br>Status: Inactive - Needs Evaluation | | SSE 1/2 - 1 (0.588 mi.) | AA161 | 278 |
| ***MEPCO CENTRALAB INC.***<br>Facility Id: 19360522<br>Status: Refer: RWQCB | ***4561 COLORADO BLVD.*** | ***SSE 1/2 - 1 (0.772 mi.)*** | ***AC166*** | ***299*** |

# EXECUTIVE SUMMARY

***State and tribal landfill and/or solid waste disposal site lists***

SWF/LF: The Solid Waste Facilities/Landfill Sites records typically contain an inventory of solid waste disposal facilities or landfills in a particular state. The data come from the Integrated Waste Management Board's Solid Waste Information System (SWIS) database.

A review of the SWF/LF list, as provided by EDR, and dated 05/16/2016 has revealed that there are 4 SWF/LF sites within approximately 0.5 miles of the target property.

| Equal/Higher Elevation | Address | Direction / Distance | Map ID | Page |
|---|---|---|---|---|
| E.L. FLEMMING DUMP<br>Facility ID: 19-AR-5041 | 5431 SAN FERNANDO RD | SE 1/4 - 1/2 (0.298 mi.) | W143 | 246 |
| GRAND CENTRAL AIRPOR<br>Site ID: 1951<br>Status: Closed | 1101 AIR WAY | NW 1/4 - 1/2 (0.392 mi.) | 153 | 269 |

| Lower Elevation | Address | Direction / Distance | Map ID | Page |
|---|---|---|---|---|
| AMERICAN RECLAMATION<br>Facility ID: 19-AR-1241<br>Facility ID: 19-AR-1242<br>Site ID: 2644<br>Site ID: 2771<br>Status: Active<br>Operational Status: Active<br>Regulation Status: Permitted | 4560 DORAN ST | SSE 1/8 - 1/4 (0.161 mi.) | L69 | 169 |
| ***SOUTH COAST RECYCLIN***<br>Site ID: 309<br>Status: Active | ***4560 DORAN ST*** | ***SSE 1/8 - 1/4 (0.161 mi.)*** | ***L72*** | ***173*** |

***State and tribal leaking storage tank lists***

LUST: The Leaking Underground Storage Tank Incident Reports contain an inventory of reported leaking underground storage tank incidents. The data come from the State Water Resources Control Board Leaking Underground Storage Tank Information System.

A review of the LUST list, as provided by EDR, and dated 03/14/2016 has revealed that there are 10 LUST sites within approximately 0.5 miles of the target property.

| Equal/Higher Elevation | Address | Direction / Distance | Map ID | Page |
|---|---|---|---|---|
| ***GLENDALE CITY, PUBLI***<br>Facility Id: 109.0756<br>Status: Case Closed<br>Global ID: T0603700174 | ***634 BEKINS WAY*** | ***NNW 0 - 1/8 (0.013 mi.)*** | ***B18*** | ***125*** |
| ***GRAYSON POWER PLANT***<br>Status: Completed - Case Closed<br>Facility Id: 912030016<br>Status: Case Closed<br>Global Id: T0603702041<br>Global ID: T0603702041 | ***5750 SAN FERNANDO RD*** | ***NNE 0 - 1/8 (0.037 mi.)*** | ***D29*** | ***135*** |
| ***HIGHLAND ARCO*** | ***5800 SAN FERNANDO*** | ***N 0 - 1/8 (0.051 mi.)*** | ***D31*** | ***139*** |

| | | | | |
|---|---|---|---|---|
| Status: Completed - Case Closed<br>Global Id: T0603702040 | | | | |
| ***FORMER EMILIO'S AUTO***<br>Facility Id: 912020034<br>Status: Preliminary site assessment workplan submitted<br>Global ID: T0603702040 | ***5800 SAN FERNANDO RD*** | ***N 0 - 1/8 (0.051 mi.)*** | ***D33*** | ***142*** |
| ***PRODUCTS RESEARCH &***<br>Status: Completed - Case Closed<br>Facility Id: R-10470<br>Status: Leak being confirmed<br>Global Id: T0603704937<br>Global ID: T0603704937 | ***5430 SAN FERNANDO RD*** | ***SE 1/4 - 1/2 (0.330 mi.)*** | ***W145*** | ***250*** |
| MOBIL #18-GGL<br>Status: Completed - Case Closed<br>Facility Id: 912020025<br>Status: Pollution Characterization<br>Global Id: T0603702039<br>Global ID: T0603702039 | 900 GLENOAKS BLVD W | NNE 1/4 - 1/2 (0.337 mi.) | X148 | 257 |
| ***SEPULVEDA ANG - SEPU***<br>Status: Remedial action (cleanup) Underway<br>Global ID: T0603743904 | | ***NNW 1/4 - 1/2 (0.366 mi.)*** | ***150*** | ***264*** |

| Lower Elevation | Address | Direction / Distance | Map ID | Page |
|---|---|---|---|---|
| MONTEREY TOW<br>Facility Id: 109.0728<br>Status: Case Closed<br>Global ID: T0603700173 | 915 AIR WY | NNW 1/8 - 1/4 (0.146 mi.) | I56 | 159 |
| ***MONTEREY TOW***<br>Status: Completed - Case Closed<br>Global Id: T0603700173 | ***915 AIR WY*** | ***NNW 1/8 - 1/4 (0.146 mi.)*** | ***I57*** | ***160*** |
| ***SOUTH COAST RECYCLIN***<br>Status: Completed - Case Closed<br>Global Id: T10000003378 | ***4560 DORAN ST*** | ***SSE 1/8 - 1/4 (0.161 mi.)*** | ***L72*** | ***173*** |

SLIC: SLIC Region comes from the California Regional Water Quality Control Board.

A review of the SLIC list, as provided by EDR, and dated 03/14/2016 has revealed that there are 13 SLIC sites within approximately 0.5 miles of the target property.

| Equal/Higher Elevation | Address | Direction / Distance | Map ID | Page |
|---|---|---|---|---|
| ***ARMSTRONG GARDEN CEN***<br>Facility Status: Completed - Case Closed<br>Global Id: SL603798926 | ***5816 SAN FERNANDO RD*** | ***N 0 - 1/8 (0.054 mi.)*** | ***E35*** | ***145*** |
| ***J.J. CHEROKEE***<br>Facility Status: Completed - Case Closed<br>Global Id: T10000004771 | ***815 W MILFORD ST*** | ***SE 1/4 - 1/2 (0.282 mi.)*** | ***140*** | ***244*** |
| ***HYBRID SYSEMS (FORME***<br>Facility Status: Completed - Case Closed<br>Global Id: SL603798924 | ***6040 SAN FERNANDO RD*** | ***NNW 1/4 - 1/2 (0.291 mi.)*** | ***142*** | ***245*** |
| ***PRODUCTS RESEARCH &*** | ***5430 SAN FERNANDO RD*** | ***SE 1/4 - 1/2 (0.330 mi.)*** | ***W145*** | ***250*** |

| | | | | |
|---|---|---|---|---|
| Facility Status: Open - Remediation<br>Global Id: SL603799127 | | | | |
| ***KEN'S BROACHING***<br>Facility Status: Open - Inactive<br>Global Id: SL603799110 | ***747 SALEM ST.*** | ***SE 1/4 - 1/2 (0.498 mi.)*** | ***159*** | ***276*** |

| Lower Elevation | Address | Direction / Distance | Map ID | Page |
|---|---|---|---|---|
| GLENAIR, INC.<br>Facility Status: Completed - Case Closed<br>Global Id: T10000006454 | 920 AIR WAY | NW 1/8 - 1/4 (0.147 mi.) | I58 | 161 |
| ***DELSEN TESTING LABOR***<br>Facility Status: Completed - Case Closed<br>Global Id: SL603798949 | ***1024 GRAND CENTRAL A*** | ***NW 1/8 - 1/4 (0.233 mi.)*** | ***S125*** | ***231*** |
| ***WALT DISNEY COMPANY***<br>Facility Status: Completed - Case Closed<br>Global Id: SL603798948 | ***1100 GRAND CENTRAL A*** | ***NW 1/4 - 1/2 (0.331 mi.)*** | ***147*** | ***256*** |
| PACER<br>Facility Status: Completed - Case Closed<br>Global Id: SL603799124 | 5341 W. SAN FERNANDO | SSE 1/4 - 1/2 (0.379 mi.) | Y151 | 266 |
| ***GLENDALE FEDERAL BAN***<br>Facility Status: Completed - Case Closed<br>Global Id: SL603798946 | ***1100 FRANCES CT.*** | ***WNW 1/4 - 1/2 (0.407 mi.)*** | ***Z154*** | ***269*** |
| ***APPLIED GRAPHICS***<br>Facility Status: Completed - Case Closed<br>Global Id: SL603798945 | ***601 RODIER DR*** | ***WNW 1/4 - 1/2 (0.443 mi.)*** | ***Z155*** | ***270*** |
| WALT DISNEY COMPANY<br>Facility Status: Completed - Case Closed<br>Global Id: SL603798947 | 530 RODIER DR. | WNW 1/4 - 1/2 (0.459 mi.) | 157 | 274 |
| ***SOCAL GAS***<br>Facility Status: Completed - Case Closed<br>Global Id: SL603799113 | ***4555 SPERRY ST.*** | ***SSE 1/4 - 1/2 (0.464 mi.)*** | ***158*** | ***275*** |

***State and tribal voluntary cleanup sites***

VCP: Contains low threat level properties with either confirmed or unconfirmed releases and the project proponents have request that DTSC oversee investigation and/or cleanup activities and have agreed to provide coverage for DTSC's costs.

A review of the VCP list, as provided by EDR, and dated 05/02/2016 has revealed that there is 1 VCP site within approximately 0.5 miles of the target property.

| Lower Elevation | Address | Direction / Distance | Map ID | Page |
|---|---|---|---|---|
| ***SUNLAND CHEMICAL***<br>Status: Active<br>Facility Id: 60002197 | ***5447 WEST SAN FERNAN*** | ***SSE 1/8 - 1/4 (0.220 mi.)*** | ***M108*** | ***216*** |

# EXECUTIVE SUMMARY

## ADDITIONAL ENVIRONMENTAL RECORDS

### *Local Lists of Landfill / Solid Waste Disposal Sites*

WMUDS/SWAT: The Waste Management Unit Database System is used for program tracking and inventory of waste management units. The source is the State Water Resources Control Board.

A review of the WMUDS/SWAT list, as provided by EDR, and dated 04/01/2000 has revealed that there is 1 WMUDS/SWAT site within approximately 0.5 miles of the target property.

| Equal/Higher Elevation | Address | Direction / Distance | Map ID | Page |
|---|---|---|---|---|
| KELLOGG AVENUE DUMP- | 630 KELLOGG AVENUE | NNW 0 - 1/8 (0.003 mi.) | B16 | 123 |

SWRCY: A listing of recycling facilities in California.

A review of the SWRCY list, as provided by EDR, and dated 03/15/2016 has revealed that there is 1 SWRCY site within approximately 0.5 miles of the target property.

| Lower Elevation | Address | Direction / Distance | Map ID | Page |
|---|---|---|---|---|
| SOUTH COAST FIBERS I<br>Cert Id: RC13141 | 5487 W SAN FERNANDO | SSE 1/8 - 1/4 (0.161 mi.) | L65 | 166 |

### *Local Lists of Hazardous waste / Contaminated Sites*

HIST Cal-Sites: Formerly known as ASPIS, this database contains both known and potential hazardous substance sites. The source is the California Department of Toxic Substance Control. No longer updated by the state agency. It has been replaced by ENVIROSTOR.

A review of the HIST Cal-Sites list, as provided by EDR, and dated 08/08/2005 has revealed that there is 1 HIST Cal-Sites site within approximately 1 mile of the target property.

| Equal/Higher Elevation | Address | Direction / Distance | Map ID | Page |
|---|---|---|---|---|
| ***SAN FERNANDO VALLEY*** | ***CRYSTAL SPRINGS WELL*** | ***0 - 1/8 (0.000 mi.)*** | ***0*** | ***71*** |

### *Local Lists of Registered Storage Tanks*

SWEEPS UST: Statewide Environmental Evaluation and Planning System. This underground storage tank listing was updated and maintained by a company contacted by the SWRCB in the early 1990's. The listing is no longer updated or maintained. The local agency is the contact for more information on a site on the SWEEPS list.

A review of the SWEEPS UST list, as provided by EDR, and dated 06/01/1994 has revealed that there are 11 SWEEPS UST sites within approximately 0.25 miles of the target property.

| Equal/Higher Elevation | Address | Direction / Distance | Map ID | Page |
|---|---|---|---|---|
| ***GRAYSON POWER PLANT*** | ***634 BEKINS*** | ***NNW 0 - 1/8 (0.013 mi.)*** | ***B17*** | ***124*** |

| | | | | |
|---|---|---|---|---|
| Status: A<br>Tank Status: A<br>Comp Number: 11621 | | | | |
| ***BARGIN GAS***<br>Status: A<br>Tank Status: A<br>Comp Number: 12625 | ***5800 SAN FERNANDO RD*** | ***N 0 - 1/8 (0.051 mi.)*** | ***D34*** | ***143*** |
| ***CITY OF GLENDALE WAS***<br>Status: A<br>Tank Status: A<br>Comp Number: 10434 | ***976 W DORAN ST*** | ***SE 1/8 - 1/4 (0.156 mi.)*** | ***K64*** | ***165*** |
| ***KENNEDY HYDRAULICS***<br>Status: A<br>Comp Number: 12275 | ***521 COMMERCIAL ST*** | ***SE 1/8 - 1/4 (0.228 mi.)*** | ***Q115*** | ***223*** |
| ***GEORGE HOPKINS CONST***<br>Status: A<br>Comp Number: 10648 | ***6006 SAN FERNANDO RD*** | ***NNW 1/8 - 1/4 (0.232 mi.)*** | ***R123*** | ***230*** |
| ***HOWARD DEVELOPEMENT***<br>Status: A<br>Comp Number: 12276 | ***800 W DORAN ST*** | ***ESE 1/8 - 1/4 (0.246 mi.)*** | ***V135*** | ***241*** |

| Lower Elevation | Address | Direction / Distance | Map ID | Page |
|---|---|---|---|---|
| ***AAA PAPER STOCK COMP***<br>Status: A<br>Comp Number: 4817 | ***5487 SAN FERNANDO RD*** | ***SSE 1/8 - 1/4 (0.161 mi.)*** | ***L67*** | ***168*** |
| ***AAA PAPER STOCK COMP***<br>Comp Number: 4811 | ***4560 DORAN ST*** | ***SSE 1/8 - 1/4 (0.161 mi.)*** | ***L68*** | ***168*** |
| ***SUNLAND CHEMICAL & R***<br>Comp Number: 1351 | ***5440 SAN FERNANDO RD*** | ***SE 1/8 - 1/4 (0.167 mi.)*** | ***M77*** | ***182*** |
| ***AIRCO ENGINEERING, I***<br>Comp Number: 4827 | ***5471 W SAN FERNANDO*** | ***SSE 1/8 - 1/4 (0.181 mi.)*** | ***M91*** | ***198*** |
| ***UNK***<br>Comp Number: 7842 | ***5467 W SAN FERNANDO*** | ***SSE 1/8 - 1/4 (0.188 mi.)*** | ***M95*** | ***199*** |

HIST UST: Historical UST Registered Database.

A review of the HIST UST list, as provided by EDR, and dated 10/15/1990 has revealed that there are 15 HIST UST sites within approximately 0.25 miles of the target property.

| Equal/Higher Elevation | Address | Direction / Distance | Map ID | Page |
|---|---|---|---|---|
| 99174<br>Facility Id: 00000063190 | 5700 SAN FERNANDO RD | ENE 0 - 1/8 (0.031 mi.) | C25 | 133 |
| BARGAIN GAS<br>Facility Id: 00000016930 | 5800 SAN FERNANDO RD | N 0 - 1/8 (0.051 mi.) | D30 | 138 |
| MOULDER BROS<br>Facility Id: 00000020976 | 955 W DORAN ST | SE 1/8 - 1/4 (0.154 mi.) | K61 | 162 |
| ***CITY OF GLENDALE WAS*** | ***976 W DORAN ST*** | ***SE 1/8 - 1/4 (0.156 mi.)*** | ***K64*** | ***165*** |

| | | | | |
|---|---|---|---|---|
| Facility Id: 00000034266 | | | | |
| MOULDER BROTHERS<br>Facility Id: 00000055676 | 905 W DORAN STREET | SE 1/8 - 1/4 (0.167 mi.) | K73 | 178 |
| ***KENNEDY HYDRAULICS***<br>Facility Id: 00000050747<br>Facility Id: 00000064456 | ***521 COMMERCIAL ST*** | ***SE 1/8 - 1/4 (0.228 mi.)*** | ***Q115*** | ***223*** |
| MR FENCE INC<br>Facility Id: 00000005033 | 6006 SAN FERNANDO RD | NNW 1/8 - 1/4 (0.232 mi.) | R124 | 230 |
| ***VIVA CONCEPTS LLC*** | ***800 W DORAN ST*** | ***ESE 1/8 - 1/4 (0.246 mi.)*** | ***V136*** | ***242*** |

| Lower Elevation | Address | Direction / Distance | Map ID | Page |
|---|---|---|---|---|
| SPERRY ELECTRIC INC<br>Facility Id: 00000003020 | 915 AIR WAY | NNW 1/8 - 1/4 (0.146 mi.) | I54 | 158 |
| ***SUNLAND CHEMICAL AND*** | ***5447 SAN FERNANDO RD*** | ***SE 1/8 - 1/4 (0.167 mi.)*** | ***M79*** | ***186*** |
| ECONOMY PACKAGING<br>Facility Id: 00000064449<br>Facility Id: 00000001825 | 907 FLOWER ST | WNW 1/8 - 1/4 (0.190 mi.) | N97 | 202 |
| TONYS EXPRESS INC<br>Facility Id: 00000003674 | 907 FLOWER ST | WNW 1/8 - 1/4 (0.190 mi.) | N98 | 205 |
| ***SUNLAND, INC./MACDER*** | ***5439 SAN FERNANDO RO*** | ***SSE 1/8 - 1/4 (0.204 mi.)*** | ***P102*** | ***207*** |
| ***SUNLAND CHEMICAL AND*** | ***5440 SAN FERNANDO RD*** | ***SSE 1/8 - 1/4 (0.230 mi.)*** | ***T118*** | ***227*** |
| ***GLENDALE WATER & POW*** | ***1000 FLOWER ST*** | ***WNW 1/8 - 1/4 (0.231 mi.)*** | ***N120*** | ***228*** |

CA FID UST: The Facility Inventory Database contains active and inactive underground storage tank locations. The source is the State Water Resource Control Board.

A review of the CA FID UST list, as provided by EDR, and dated 10/31/1994 has revealed that there are 6 CA FID UST sites within approximately 0.25 miles of the target property.

| Equal/Higher Elevation | Address | Direction / Distance | Map ID | Page |
|---|---|---|---|---|
| ***GRAYSON POWER PLANT***<br>Facility Id: 19056738<br>Status: A | ***634 BEKINS*** | ***NNW 0 - 1/8 (0.013 mi.)*** | ***B17*** | ***124*** |

| Lower Elevation | Address | Direction / Distance | Map ID | Page |
|---|---|---|---|---|
| ***AAA PAPER STOCK COMP***<br>Facility Id: 19055896<br>Status: A | ***5487 SAN FERNANDO RD*** | ***SSE 1/8 - 1/4 (0.161 mi.)*** | ***L67*** | ***168*** |
| ***AAA PAPER STOCK COMP***<br>Facility Id: 19025549<br>Status: I | ***4560 DORAN ST*** | ***SSE 1/8 - 1/4 (0.161 mi.)*** | ***L68*** | ***168*** |
| ***SUNLAND CHEMICAL & R***<br>Facility Id: 19028213<br>Status: I | ***5440 SAN FERNANDO RD*** | ***SE 1/8 - 1/4 (0.167 mi.)*** | ***M77*** | ***182*** |
| ***AIRCO ENGINEERING, I***<br>Facility Id: 19004828<br>Status: A | ***5471 W SAN FERNANDO*** | ***SSE 1/8 - 1/4 (0.181 mi.)*** | ***M91*** | ***198*** |
| ***UNK*** | ***5467 W SAN FERNANDO*** | ***SSE 1/8 - 1/4 (0.188 mi.)*** | ***M95*** | ***199*** |

# EXECUTIVE SUMMARY

Facility Id: 19054667
Status: I

***Other Ascertainable Records***

RCRA NonGen / NLR: RCRAInfo is EPA's comprehensive information system, providing access to data supporting the Resource Conservation and Recovery Act (RCRA) of 1976 and the Hazardous and Solid Waste Amendments (HSWA) of 1984. The database includes selective information on sites which generate, transport, store, treat and/or dispose of hazardous waste as defined by the Resource Conservation and Recovery Act (RCRA). Non-Generators do not presently generate hazardous waste.

A review of the RCRA NonGen / NLR list, as provided by EDR, and dated 12/09/2015 has revealed that there are 3 RCRA NonGen / NLR sites within approximately 0.25 miles of the target property.

| Lower Elevation | Address | Direction / Distance | Map ID | Page |
|---|---|---|---|---|
| ***SUNLAND CHEMICAL & R*** | ***5440 SAN FERNANDO RD*** | ***SE 1/8 - 1/4 (0.167 mi.)*** | ***M77*** | ***182*** |
| ***SHIRMAR TRUCKING*** | ***5440 SAN FERNANDO RD*** | ***SE 1/8 - 1/4 (0.167 mi.)*** | ***M80*** | ***188*** |
| ***AGFA CORPORATION*** | ***1014 GRAND CENTRAL A*** | ***NW 1/8 - 1/4 (0.222 mi.)*** | ***S109*** | ***219*** |

FUDS: The Listing includes locations of Formerly Used Defense Sites Properties where the US Army Corps Of Engineers is actively working or will take necessary cleanup actions.

A review of the FUDS list, as provided by EDR, and dated 01/31/2015 has revealed that there are 2 FUDS sites within approximately 1 mile of the target property.

| Equal/Higher Elevation | Address | Direction / Distance | Map ID | Page |
|---|---|---|---|---|
| GRAND CENTRAL AIR TE | | NW 1/2 - 1 (0.626 mi.) | 162 | 279 |
| KINNER MOTORS | | SSE 1/2 - 1 (0.931 mi.) | AD169 | 318 |

ROD: Record of Decision. ROD documents mandate a permanent remedy at an NPL (Superfund) site containing technical and health information to aid the cleanup.

A review of the ROD list, as provided by EDR, and dated 11/25/2013 has revealed that there is 1 ROD site within approximately 1 mile of the target property.

| Equal/Higher Elevation | Address | Direction / Distance | Map ID | Page |
|---|---|---|---|---|
| ***SAN FERNANDO VALLEY*** | ***CRYSTAL SPRINGS WELL*** | ***0 - 1/8 (0.000 mi.)*** | ***0*** | ***71*** |

CA BOND EXP. PLAN: Department of Health Services developed a site-specific expenditure plan as the basis for an appropriation of Hazardous Substance Cleanup Bond Act funds. It is not updated.

A review of the CA BOND EXP. PLAN list, as provided by EDR, and dated 01/01/1989 has revealed that there is 1 CA BOND EXP. PLAN site within approximately 1 mile of the target property.

| Lower Elevation | Address | Direction / Distance | Map ID | Page |
|---|---|---|---|---|
| ***CENTRALAB*** | ***4561 COLORADO BLVD.*** | ***SSE 1/2 - 1 (0.772 mi.)*** | ***AC167*** | ***310*** |

# EXECUTIVE SUMMARY

Cortese: The sites for the list are designated by the State Water Resource Control Board (LUST), the Integrated Waste Board (SWF/LS), and the Department of Toxic Substances Control (Cal-Sites).

A review of the Cortese list, as provided by EDR, and dated 03/28/2016 has revealed that there is 1 Cortese site within approximately 0.5 miles of the target property.

| Equal/Higher Elevation | Address | Direction / Distance | Map ID | Page |
|---|---|---|---|---|
| ***SAN FERNANDO VALLEY***<br>Envirostor Id: 19990012<br>Cleanup Status: ACTIVE | ***CRYSTAL SPRINGS WELL*** | ***0 - 1/8 (0.000 mi.)*** | ***0*** | ***71*** |

HIST CORTESE: The sites for the list are designated by the State Water Resource Control Board [LUST], the Integrated Waste Board [SWF/LS], and the Department of Toxic Substances Control [CALSITES]. This listing is no longer updated by the state agency.

A review of the HIST CORTESE list, as provided by EDR, and dated 04/01/2001 has revealed that there are 6 HIST CORTESE sites within approximately 0.5 miles of the target property.

| Equal/Higher Elevation | Address | Direction / Distance | Map ID | Page |
|---|---|---|---|---|
| ***GLENDALE CITY, PUBLI***<br>Reg Id: 109.0756 | ***634 BEKINS WAY*** | ***NNW 0 - 1/8 (0.013 mi.)*** | ***B18*** | ***125*** |
| ***GRAYSON POWER PLANT***<br>Reg Id: 912030016 | ***5750 SAN FERNANDO RD*** | ***NNE 0 - 1/8 (0.037 mi.)*** | ***D29*** | ***135*** |
| ***HIGHLAND ARCO***<br>Reg Id: 912020034 | ***5800 SAN FERNANDO*** | ***N 0 - 1/8 (0.051 mi.)*** | ***D31*** | ***139*** |
| MOBIL #18-GGL<br>Reg Id: 912020025 | 900 GLENOAKS | NNE 1/4 - 1/2 (0.337 mi.) | X149 | 264 |

| Lower Elevation | Address | Direction / Distance | Map ID | Page |
|---|---|---|---|---|
| ***MONTEREY TOW***<br>Reg Id: 109.0728 | ***915 AIR WY*** | ***NNW 1/8 - 1/4 (0.146 mi.)*** | ***I57*** | ***160*** |
| PRODUCTS RESEARCH &<br>Reg Id: R-10470 | 5430 SAN FERNANDO | SSE 1/8 - 1/4 (0.246 mi.) | T134 | 241 |

HWP: Detailed information on permitted hazardous waste facilities and corrective action ("cleanups") tracked in EnviroStor.

A review of the HWP list, as provided by EDR, and dated 02/22/2016 has revealed that there is 1 HWP site within approximately 1 mile of the target property.

| Lower Elevation | Address | Direction / Distance | Map ID | Page |
|---|---|---|---|---|
| ***SUNLAND, INC./MACDER***<br>EPA Id: CAD010707222<br>Cleanup Status: KNOWN GENERATORS | ***5439 SAN FERNANDO RO*** | ***SSE 1/8 - 1/4 (0.204 mi.)*** | ***P102*** | ***207*** |

# EXECUTIVE SUMMARY

HWT: A listing of hazardous waste transporters. In California, unless specifically exempted, it is unlawful for any person to transport hazardous wastes unless the person holds a valid registration issued by DTSC. A hazardous waste transporter registration is valid for one year and is assigned a unique registration number.

A review of the HWT list, as provided by EDR, and dated 04/11/2016 has revealed that there is 1 HWT site within approximately 0.25 miles of the target property.

| Lower Elevation | Address | Direction / Distance | Map ID | Page |
|---|---|---|---|---|
| ***GLENDALE ENV MGNT CT***<br>Reg Num: 2655 | ***780 FLOWER ST*** | ***NW 0 - 1/8 (0.092 mi.)*** | ***G46*** | ***152*** |

Notify 65: Listings of all Proposition 65 incidents reported to counties by the State Water Resources Control Board and the Regional Water Quality Control Board. This database is no longer updated by the reporting agency.

A review of the Notify 65 list, as provided by EDR, and dated 09/10/2015 has revealed that there is 1 Notify 65 site within approximately 1 mile of the target property.

| Equal/Higher Elevation | Address | Direction / Distance | Map ID | Page |
|---|---|---|---|---|
| ***PRC-DESOTO INTERNATI*** | ***5430 SAN FERNANDO RO*** | ***SE 1/4 - 1/2 (0.330 mi.)*** | ***W144*** | ***247*** |

WIP: Well Investigation Program case in the San Gabriel and San Fernando Valley area.

A review of the WIP list, as provided by EDR, and dated 07/03/2009 has revealed that there are 69 WIP sites within approximately 0.25 miles of the target property.

| Equal/Higher Elevation | Address | Direction / Distance | Map ID | Page |
|---|---|---|---|---|
| GALLERIA CAR WASH<br>Facility Status: Historical | 5720 SAN FERNANDO RD | NE 0 - 1/8 (0.032 mi.) | C27 | 134 |
| ***FORMER EMILIO'S AUTO***<br>Facility Status: Historical | ***5800 SAN FERNANDO RD*** | ***N 0 - 1/8 (0.051 mi.)*** | ***D33*** | ***142*** |
| ***ARMSTRONG GARDEN CEN***<br>Facility Status: Backlog | ***5816 SAN FERNANDO RD*** | ***N 0 - 1/8 (0.054 mi.)*** | ***E35*** | ***145*** |
| JAMES R. TIPPS<br>Facility Status: Historical | 5830 SAN FERNANDO RD | N 0 - 1/8 (0.070 mi.) | E37 | 149 |
| CONTEMPORARY COMPUTE<br>Facility Status: Historical | 5838 SAN FERNANDO RD | N 0 - 1/8 (0.085 mi.) | F39 | 150 |
| CONTEMPORAY COMPUTER<br>Facility Status: Historical | 5838 SAN FERNANDO RD | N 0 - 1/8 (0.085 mi.) | F40 | 150 |
| MD PRINTING (FORMERL<br>Facility Status: Historical | 5838 SAN FERNANDO RD | N 0 - 1/8 (0.085 mi.) | F41 | 150 |
| LOVE GIFT INTER LTD/<br>Facility Status: Historical | 5838 SAN FERNANDO RD | N 0 - 1/8 (0.085 mi.) | F42 | 150 |
| R-SQUARED SCAN SYSTE<br>Facility Status: Historical | 5838 SAN FERNANDO RD | N 0 - 1/8 (0.085 mi.) | F43 | 151 |
| TRI-STAR MOTORS<br>Facility Status: Historical | 5832 SAN FERNANDO RD | N 0 - 1/8 (0.087 mi.) | E45 | 152 |
| ANGELUS PET HOSPITAL | 5846 SAN FERNANDO RD | NNW 0 - 1/8 (0.094 mi.) | F47 | 156 |

| | | | | |
|---|---|---|---|---|
| Facility Status: Historical | | | | |
| KIEV RADIO 870 AM<br>Facility Status: Historical | 5900 SAN FERNANDO RD | NNW 0 - 1/8 (0.108 mi.) | F50 | 157 |
| CENTRAL SCREEN CO.<br>Facility Status: Historical | 5914 SAN FERNANDO RD | NNW 1/8 - 1/4 (0.150 mi.) | J60 | 162 |
| CALIF. ELECTRICAL SE<br>Facility Status: Historical | 5924 SAN FERNANDO RD | NNW 1/8 - 1/4 (0.172 mi.) | J86 | 196 |
| ASSOCIATED INSTRUMEN<br>Facility Status: Historical | 5930 SAN FERNANDO RD | NNW 1/8 - 1/4 (0.174 mi.) | J87 | 197 |
| WALNUT CABINET SHOP<br>Facility Status: Historical | 5932 SAN FERNANDO RD | NNW 1/8 - 1/4 (0.174 mi.) | J88 | 197 |
| DAYHAN ELECTRONICS<br>Facility Status: Historical | 5524 SAN FERNANDO RD | SE 1/8 - 1/4 (0.176 mi.) | K89 | 197 |
| ***UNITED BODY SHOP***<br>Facility Status: Historical | ***5938 SAN FERNANDO RD*** | ***NNW 1/8 - 1/4 (0.192 mi.)*** | ***J99*** | ***205*** |
| GENERAL AIRCRAFT CO.<br>Facility Status: Historical | 5514 SAN FERNANDO RD | SE 1/8 - 1/4 (0.194 mi.) | K101 | 207 |
| R. A. FISCHER<br>Facility Status: Historical | 517 COMMERCIAL ST | SE 1/8 - 1/4 (0.210 mi.) | Q104 | 215 |
| DAYHAN ELECTRONICS<br>Facility Status: Historical | 5524 W SAN FERNANDO | SE 1/8 - 1/4 (0.213 mi.) | Q105 | 215 |
| GREY-HOUND BUS<br>Facility Status: Historical | 6000 SAN FERNANDO RD | NNW 1/8 - 1/4 (0.215 mi.) | R106 | 216 |
| ONTARIO REFRIGERATIO<br>Facility Status: Historical | 6002 SAN FERNANDO RD | NNW 1/8 - 1/4 (0.225 mi.) | R111 | 221 |
| ***COLLISON***<br>Facility Status: Historical | ***5500 SAN FERNANDO RD*** | ***SE 1/8 - 1/4 (0.226 mi.)*** | ***T112*** | ***221*** |
| SOUND CONTROL<br>Facility Status: Historical | 526 COMMERCIAL ST | ESE 1/8 - 1/4 (0.227 mi.) | Q113 | 221 |
| ***INDO-EUROPEAN FOODS,***<br>Facility Status: Historical | ***1000 AIRWAY*** | ***NW 1/8 - 1/4 (0.227 mi.)*** | ***O114*** | ***222*** |
| EASTERN CONTRACTORS,<br>Facility Status: Historical | 6004 SAN FERNANDO RD | NNW 1/8 - 1/4 (0.229 mi.) | R117 | 227 |
| PACIFIC RIM ADMINIST<br>Facility Status: Historical | 6006 SAN FERNANDO RD | NNW 1/8 - 1/4 (0.232 mi.) | R121 | 229 |
| MASTERS CONTRACTING<br>Facility Status: Historical | 6006 SAN FERNANDO RD | NNW 1/8 - 1/4 (0.232 mi.) | R122 | 229 |
| VIDEO CENTER<br>Facility Status: Historical | 6008 SAN FERNANDO RD | NNW 1/8 - 1/4 (0.236 mi.) | R127 | 237 |
| MAT SOURCE<br>Facility Status: Historical | 516 COMMERCIAL ST | SE 1/8 - 1/4 (0.239 mi.) | Q128 | 237 |
| M & M SHOP<br>Facility Status: Historical | 6010 SAN FERNANDO RD | NNW 1/8 - 1/4 (0.239 mi.) | R129 | 237 |
| FABRIC FLAMEPROOFING<br>Facility Status: Historical | 835 W MILFORD ST | SE 1/8 - 1/4 (0.241 mi.) | Q131 | 239 |
| TITLE LAND COMPANY | 800 W DORAN ST | ESE 1/8 - 1/4 (0.246 mi.) | V137 | 243 |

| | | | | |
|---|---|---|---|---|
| Facility Status: Historical | | | | |
| BEZJIAN<br>Facility Status: Historical | 1020 AIRWAY | NW 1/8 - 1/4 (0.248 mi.) | 138 | 243 |
| ALANDALE INS. AGENCY<br>Facility Status: Historical | 750 FAIRMONT AVE | E 1/8 - 1/4 (0.248 mi.) | 139 | 243 |

| Lower Elevation | Address | Direction / Distance | Map ID | Page |
|---|---|---|---|---|
| GLENDALE ENVELOPE IN<br>Facility Status: Historical | 807 AIRWAY | NNW 0 - 1/8 (0.017 mi.) | B19 | 129 |
| M & R MACHINE INC.<br>Facility Status: Historical | 811 AIRWAY | NNW 0 - 1/8 (0.021 mi.) | B22 | 131 |
| LUIGI' POTTERY & GAR<br>Facility Status: Historical | 5630 SAN FERNANDO RD | ESE 0 - 1/8 (0.029 mi.) | 23 | 131 |
| ***AUDERCO CARPET***<br>Facility Status: Historical | ***847 AIRWAY*** | ***NNW 0 - 1/8 (0.059 mi.)*** | ***36*** | ***147*** |
| THE BEKINS CO.<br>Facility Status: Historical | 777 S FLOWER ST | NW 0 - 1/8 (0.102 mi.) | G48 | 156 |
| PRUDENTIAL INSURANCE<br>Facility Status: Historical | 900 GRAND CENTRAL AV | NW 0 - 1/8 (0.103 mi.) | G49 | 156 |
| PACIFIC PLASTICS DES<br>Facility Status: Historical | 911 AIRWAY | NNW 1/8 - 1/4 (0.141 mi.) | I53 | 158 |
| MONTEREY TOW SERVICE<br>Facility Status: Historical | 915 AIRWAY | NNW 1/8 - 1/4 (0.146 mi.) | I55 | 158 |
| GLENAIR INC.<br>Facility Status: Historical | 920 AIRWAY | NW 1/8 - 1/4 (0.147 mi.) | I59 | 162 |
| GLENAIR INC.<br>Facility Status: Historical | 930 AIRWAY | NW 1/8 - 1/4 (0.156 mi.) | I62 | 163 |
| ***SOUTH COAST RECYCLIN***<br>Facility Status: Historical | ***4560 DORAN ST*** | ***SSE 1/8 - 1/4 (0.161 mi.)*** | ***L66*** | ***167*** |
| SELLARS PRODUCTS, IN<br>Facility Status: Historical | 4520 W DORAN ST | SSE 1/8 - 1/4 (0.161 mi.) | L70 | 172 |
| SOUTH COAST RECYCLIN<br>Facility Status: Historical | 5487 W SAN FERNANDO | SSE 1/8 - 1/4 (0.161 mi.) | L71 | 172 |
| L & W TRANSMISSIONS<br>Facility Status: Historical | 5440 W SAN FERNANDO | SE 1/8 - 1/4 (0.167 mi.) | M75 | 181 |
| ACTION FORKLIFT SERV<br>Facility Status: Historical | 5440 W SAN FERNANDO | SE 1/8 - 1/4 (0.167 mi.) | M76 | 181 |
| GLENDALE CARBURETORS<br>Facility Status: Historical | 5440 W SAN FERNANDO | SE 1/8 - 1/4 (0.167 mi.) | M78 | 185 |
| ***SUNLAND CHEMICAL AND***<br>Facility Status: Historical | ***5447 SAN FERNANDO RD*** | ***SE 1/8 - 1/4 (0.167 mi.)*** | ***M79*** | ***186*** |
| DRAWSTRINGS<br>Facility Status: Historical | 933 AIRWAY | NNW 1/8 - 1/4 (0.170 mi.) | I83 | 194 |
| ***GLENAIR INC***<br>Facility Status: Historical | ***944 AIRWAY*** | ***NW 1/8 - 1/4 (0.170 mi.)*** | ***I84*** | ***195*** |
| JOE OF CALIFORNIA, I | 5476 W SAN FERNANDO | SE 1/8 - 1/4 (0.171 mi.) | M85 | 196 |

| | | | | |
|---|---|---|---|---|
| Facility Status: Historical | | | | |
| THE J P WEAVER CO<br>Facility Status: Historical | 941 AIRWAY | NNW 1/8 - 1/4 (0.180 mi.) | I90 | 197 |
| ***AIRCO ENGINEERING, I***<br>Facility Status: Historical | ***5471 W SAN FERNANDO*** | ***SSE 1/8 - 1/4 (0.181 mi.)*** | ***M91*** | ***198*** |
| SEAVAN TRUCK LINES<br>Facility Status: Historical | 5470 W SAN FERNANDO | SE 1/8 - 1/4 (0.181 mi.) | M92 | 199 |
| RIO COFFEE<br>Facility Status: Historical | 5469 W SAN FERNANDO | SSE 1/8 - 1/4 (0.184 mi.) | M93 | 199 |
| LASER MARK-IT<br>Facility Status: Historical | 945 AIRWAY | NNW 1/8 - 1/4 (0.185 mi.) | I94 | 199 |
| DIGITAL PRESS<br>Facility Status: Historical | 951 AIR WAY | NW 1/8 - 1/4 (0.193 mi.) | O100 | 206 |
| MACDERMID, INC.<br>Facility Status: Historical | 5439 SAN FERNANDO RD | SSE 1/8 - 1/4 (0.204 mi.) | P103 | 215 |
| CALTRANS<br>Facility Status: Historical | 1011 GRAND CENTRAL A | NW 1/8 - 1/4 (0.219 mi.) | S107 | 216 |
| ***METACOMET INC***<br>Facility Status: Historical | ***1014 GRAND CENTRAL A*** | ***NW 1/8 - 1/4 (0.222 mi.)*** | ***S110*** | ***220*** |
| L. A. WATER & POWER<br>Facility Status: Historical | 1000 S FLOWER ST | WNW 1/8 - 1/4 (0.231 mi.) | N119 | 228 |
| ***DELSEN TESTING LABOR***<br>Facility Status: Active | ***1024 GRAND CENTRAL A*** | ***NW 1/8 - 1/4 (0.233 mi.)*** | ***S125*** | ***231*** |
| PRUDENTIAL INSURANCE<br>Facility Status: Historical | 1025 GRAND CENTRAL A | NW 1/8 - 1/4 (0.234 mi.) | S126 | 236 |
| ACTIVE WINDOW PRODUC<br>Facility Status: Historical | 5431 W SAN FERNANDO | SSE 1/8 - 1/4 (0.245 mi.) | U133 | 241 |

## EDR HIGH RISK HISTORICAL RECORDS

### *EDR Exclusive Records*

EDR Hist Auto: EDR has searched selected national collections of business directories and has collected listings of potential gas station/filling station/service station sites that were available to EDR researchers. EDR's review was limited to those categories of sources that might, in EDR's opinion, include gas station/filling station/service station establishments. The categories reviewed included, but were not limited to gas, gas station, gasoline station, filling station, auto, automobile repair, auto service station, service station, etc. This database falls within a category of information EDR classifies as "High Risk Historical Records", or HRHR. EDR's HRHR effort presents unique and sometimes proprietary data about past sites and operations that typically create environmental concerns, but may not show up in current government records searches.

A review of the EDR Hist Auto list, as provided by EDR, has revealed that there are 9 EDR Hist Auto sites within approximately 0.125 miles of the target property.

| Equal/Higher Elevation | Address | Direction / Distance | Map ID | Page |
|---|---|---|---|---|
| T C GULF SERVICE | 5700 SAN FERNANDO | ENE 0 - 1/8 (0.031 mi.) | C24 | 131 |
| KING FISH AUTO LAUND | 5720 SAN FERNANDO | NE 0 - 1/8 (0.032 mi.) | C26 | 134 |

# EXECUTIVE SUMMARY

| Equal/Higher Elevation | Address | Direction / Distance | Map ID | Page |
|---|---|---|---|---|
| HALL S UNION SERVICE | 5744 SAN FERNANDO | NNE 0 - 1/8 (0.033 mi.) | D28 | 134 |
| EMILIO S GULF SERVIC | 5800 SAN FERNANDO | N 0 - 1/8 (0.051 mi.) | D32 | 140 |
| Not reported | 5830 SAN FERNANDO R | N 0 - 1/8 (0.070 mi.) | E38 | 149 |
| GLENDALE TRANSMISSIO | 5832 SAN FERNANDO | N 0 - 1/8 (0.087 mi.) | E44 | 151 |

| Lower Elevation | Address | Direction / Distance | Map ID | Page |
|---|---|---|---|---|
| Not reported | 811 AIR WAY | NNW 0 - 1/8 (0.021 mi.) | B20 | 129 |
| Not reported | 4552 DORAN ST | SSE 0 - 1/8 (0.115 mi.) | H51 | 157 |
| Not reported | 4550 DORAN ST | SSE 0 - 1/8 (0.115 mi.) | H52 | 157 |

# EXECUTIVE SUMMARY

Due to poor or inadequate address information, the following sites were not mapped. Count: 2 records.

| Site Name | Database(s) |
| --- | --- |
| CHEVRON #9-5108 | LUST |
| PACIFIC EDISON SCHOOL | ENVIROSTOR, SCH |

# OVERVIEW MAP - 4655459.2S

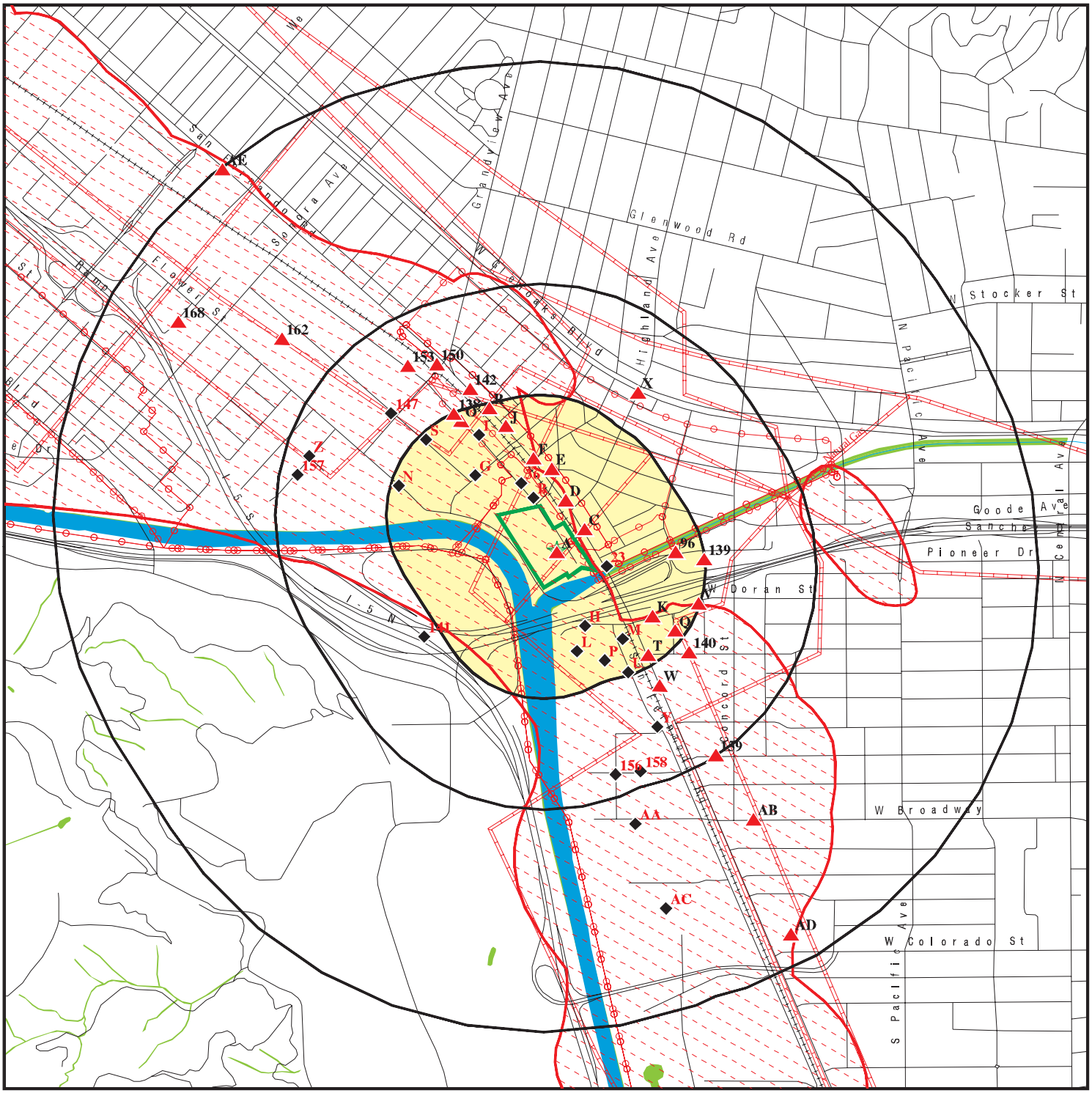


Target Property

Sites at elevations higher than or equal to the target property

Sites at elevations lower than the target property

Manufactured Gas Plants

National Priority List Sites

Dept. Defense Sites

0 1/4 1/2 1 Miles

Indian Reservations BIA

Power transmission lines

Pipelines

100-year flood zone

500-year flood zone

National Wetland Inventory

State Wetlands

Areas of Concern

This report includes Interactive Map Layers to display and/or hide map information. The legend includes only those icons for the default map view.

| | |
|---|---|
| SITE NAME: 800 Air Way | CLIENT: Stantec |
| ADDRESS: 800 Air Way<br>Glendale CA 91201 | CONTACT: Anuya Sawant |
| LAT/LONG: 34.155536 / 118.278093 | INQUIRY #: 4655459.2s<br>DATE: June 23, 2016 2:05 pm |

Copyright © 2016 EDR, Inc. © 2015 TomTom Rel. 2015.

# DETAIL MAP - 4655459.2S

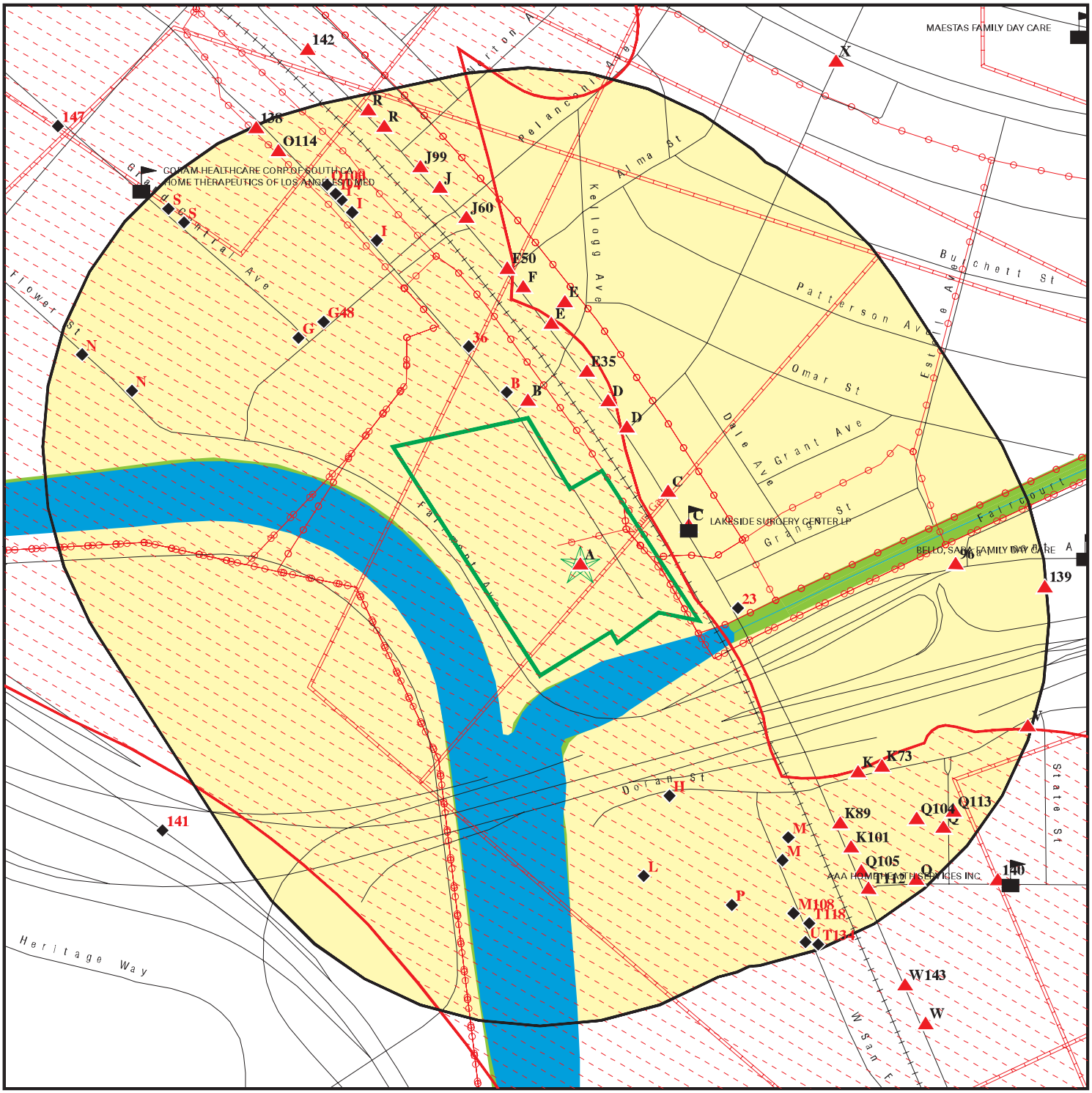


Target Property

Sites at elevations higher than or equal to the target property

Sites at elevations lower than the target property

Manufactured Gas Plants

Sensitive Receptors

National Priority List Sites

Dept. Defense Sites

0 1/16 1/8 1/4 Miles

Indian Reservations BIA

Power transmission lines

Pipelines

100-year flood zone

500-year flood zone

National Wetland Inventory

State Wetlands

Areas of Concern

This report includes Interactive Map Layers to display and/or hide map information. The legend includes only those icons for the default map view.

| | |
|---|---|
| SITE NAME: 800 Air Way | CLIENT: Stantec |
| ADDRESS: 800 Air Way<br>Glendale CA 91201 | CONTACT: Anuya Sawant |
| LAT/LONG: 34.155536 / 118.278093 | INQUIRY #: 4655459.2s<br>DATE: June 23, 2016 2:11 pm |

Copyright © 2016 EDR, Inc. © 2015 TomTom Rel. 2015.

# MAP FINDINGS SUMMARY

| Database | Search Distance (Miles) | Target Property | < 1/8 | 1/8 - 1/4 | 1/4 - 1/2 | 1/2 - 1 | > 1 | Total Plotted |
|---|---|---|---|---|---|---|---|---|
| **STANDARD ENVIRONMENTAL RECORDS** | | | | | | | | |
| ***Federal NPL site list*** | | | | | | | | |
| NPL | 1.000 | | 1 | 0 | 0 | 0 | NR | 1 |
| Proposed NPL | 1.000 | | 0 | 0 | 0 | 0 | NR | 0 |
| NPL LIENS | TP | | NR | NR | NR | NR | NR | 0 |
| ***Federal Delisted NPL site list*** | | | | | | | | |
| Delisted NPL | 1.000 | | 0 | 0 | 0 | 0 | NR | 0 |
| ***Federal CERCLIS list*** | | | | | | | | |
| FEDERAL FACILITY | 0.500 | | 0 | 0 | 0 | NR | NR | 0 |
| SEMS | 0.500 | | 1 | 3 | 1 | NR | NR | 5 |
| ***Federal CERCLIS NFRAP site list*** | | | | | | | | |
| SEMS-ARCHIVE | 0.500 | 1 | 0 | 1 | 2 | NR | NR | 4 |
| ***Federal RCRA CORRACTS facilities list*** | | | | | | | | |
| CORRACTS | 1.000 | | 0 | 1 | 0 | 0 | NR | 1 |
| ***Federal RCRA non-CORRACTS TSD facilities list*** | | | | | | | | |
| RCRA-TSDF | 0.500 | | 0 | 0 | 0 | NR | NR | 0 |
| ***Federal RCRA generators list*** | | | | | | | | |
| RCRA-LQG | 0.250 | | 0 | 1 | NR | NR | NR | 1 |
| RCRA-SQG | 0.250 | 1 | 2 | 5 | NR | NR | NR | 8 |
| RCRA-CESQG | 0.250 | | 0 | 0 | NR | NR | NR | 0 |
| ***Federal institutional controls / engineering controls registries*** | | | | | | | | |
| LUCIS | 0.500 | | 0 | 0 | 0 | NR | NR | 0 |
| US ENG CONTROLS | 0.500 | | 1 | 0 | 0 | NR | NR | 1 |
| US INST CONTROL | 0.500 | | 0 | 0 | 0 | NR | NR | 0 |
| ***Federal ERNS list*** | | | | | | | | |
| ERNS | TP | | NR | NR | NR | NR | NR | 0 |
| ***State- and tribal - equivalent NPL*** | | | | | | | | |
| RESPONSE | 1.000 | | 0 | 0 | 0 | 0 | NR | 0 |
| ***State- and tribal - equivalent CERCLIS*** | | | | | | | | |
| ENVIROSTOR | 1.000 | 1 | 1 | 2 | 1 | 10 | NR | 15 |
| ***State and tribal landfill and/or solid waste disposal site lists*** | | | | | | | | |
| SWF/LF | 0.500 | | 0 | 2 | 2 | NR | NR | 4 |
| ***State and tribal leaking storage tank lists*** | | | | | | | | |
| LUST | 0.500 | | 4 | 3 | 3 | NR | NR | 10 |

# MAP FINDINGS SUMMARY

| Database | Search Distance (Miles) | Target Property | < 1/8 | 1/8 - 1/4 | 1/4 - 1/2 | 1/2 - 1 | > 1 | Total Plotted |
|---|---|---|---|---|---|---|---|---|
| INDIAN LUST | 0.500 | | 0 | 0 | 0 | NR | NR | 0 |
| SLIC | 0.500 | 1 | 1 | 2 | 10 | NR | NR | 14 |
| ***State and tribal registered storage tank lists*** | | | | | | | | |
| FEMA UST | 0.250 | | 0 | 0 | NR | NR | NR | 0 |
| UST | 0.250 | | 0 | 0 | NR | NR | NR | 0 |
| AST | 0.250 | | 0 | 0 | NR | NR | NR | 0 |
| INDIAN UST | 0.250 | | 0 | 0 | NR | NR | NR | 0 |
| ***State and tribal voluntary cleanup sites*** | | | | | | | | |
| INDIAN VCP | 0.500 | | 0 | 0 | 0 | NR | NR | 0 |
| VCP | 0.500 | | 0 | 1 | 0 | NR | NR | 1 |
| ***State and tribal Brownfields sites*** | | | | | | | | |
| BROWNFIELDS | 0.500 | | 0 | 0 | 0 | NR | NR | 0 |
| **ADDITIONAL ENVIRONMENTAL RECORDS** | | | | | | | | |
| ***Local Brownfield lists*** | | | | | | | | |
| US BROWNFIELDS | 0.500 | | 0 | 0 | 0 | NR | NR | 0 |
| ***Local Lists of Landfill / Solid Waste Disposal Sites*** | | | | | | | | |
| WMUDS/SWAT | 0.500 | | 1 | 0 | 0 | NR | NR | 1 |
| SWRCY | 0.500 | | 0 | 1 | 0 | NR | NR | 1 |
| HAULERS | TP | | NR | NR | NR | NR | NR | 0 |
| INDIAN ODI | 0.500 | | 0 | 0 | 0 | NR | NR | 0 |
| DEBRIS REGION 9 | 0.500 | | 0 | 0 | 0 | NR | NR | 0 |
| ODI | 0.500 | | 0 | 0 | 0 | NR | NR | 0 |
| ***Local Lists of Hazardous waste / Contaminated Sites*** | | | | | | | | |
| US HIST CDL | TP | | NR | NR | NR | NR | NR | 0 |
| AOCONCERN | 1.000 | | 0 | 0 | 0 | 0 | NR | 0 |
| HIST Cal-Sites | 1.000 | | 1 | 0 | 0 | 0 | NR | 1 |
| SCH | 0.250 | | 0 | 0 | NR | NR | NR | 0 |
| CDL | TP | | NR | NR | NR | NR | NR | 0 |
| Toxic Pits | 1.000 | | 0 | 0 | 0 | 0 | NR | 0 |
| US CDL | TP | | NR | NR | NR | NR | NR | 0 |
| ***Local Lists of Registered Storage Tanks*** | | | | | | | | |
| SWEEPS UST | 0.250 | 3 | 2 | 9 | NR | NR | NR | 14 |
| HIST UST | 0.250 | 2 | 2 | 13 | NR | NR | NR | 17 |
| CA FID UST | 0.250 | 2 | 1 | 5 | NR | NR | NR | 8 |
| ***Local Land Records*** | | | | | | | | |
| LIENS | TP | | NR | NR | NR | NR | NR | 0 |
| LIENS 2 | TP | | NR | NR | NR | NR | NR | 0 |
| DEED | 0.500 | | 0 | 0 | 0 | NR | NR | 0 |
| ***Records of Emergency Release Reports*** | | | | | | | | |
| HMIRS | TP | | NR | NR | NR | NR | NR | 0 |

# MAP FINDINGS SUMMARY

| Database | Search Distance (Miles) | Target Property | < 1/8 | 1/8 - 1/4 | 1/4 - 1/2 | 1/2 - 1 | > 1 | Total Plotted |
|---|---|---|---|---|---|---|---|---|
| CHMIRS | TP | 2 | NR | NR | NR | NR | NR | 2 |
| LDS | TP | | NR | NR | NR | NR | NR | 0 |
| MCS | TP | | NR | NR | NR | NR | NR | 0 |
| SPILLS 90 | TP | | NR | NR | NR | NR | NR | 0 |
| ***Other Ascertainable Records*** | | | | | | | | |
| RCRA NonGen / NLR | 0.250 | | 0 | 3 | NR | NR | NR | 3 |
| FUDS | 1.000 | | 0 | 0 | 0 | 2 | NR | 2 |
| DOD | 1.000 | | 0 | 0 | 0 | 0 | NR | 0 |
| SCRD DRYCLEANERS | 0.500 | | 0 | 0 | 0 | NR | NR | 0 |
| US FIN ASSUR | TP | | NR | NR | NR | NR | NR | 0 |
| EPA WATCH LIST | TP | | NR | NR | NR | NR | NR | 0 |
| 2020 COR ACTION | 0.250 | | 0 | 0 | NR | NR | NR | 0 |
| TSCA | TP | | NR | NR | NR | NR | NR | 0 |
| TRIS | TP | | NR | NR | NR | NR | NR | 0 |
| SSTS | TP | | NR | NR | NR | NR | NR | 0 |
| ROD | 1.000 | | 1 | 0 | 0 | 0 | NR | 1 |
| RMP | TP | 2 | NR | NR | NR | NR | NR | 2 |
| RAATS | TP | | NR | NR | NR | NR | NR | 0 |
| PRP | TP | | NR | NR | NR | NR | NR | 0 |
| PADS | TP | | NR | NR | NR | NR | NR | 0 |
| ICIS | TP | | NR | NR | NR | NR | NR | 0 |
| FTTS | TP | | NR | NR | NR | NR | NR | 0 |
| MLTS | TP | | NR | NR | NR | NR | NR | 0 |
| COAL ASH DOE | TP | | NR | NR | NR | NR | NR | 0 |
| COAL ASH EPA | 0.500 | | 0 | 0 | 0 | NR | NR | 0 |
| PCB TRANSFORMER | TP | | NR | NR | NR | NR | NR | 0 |
| RADINFO | TP | | NR | NR | NR | NR | NR | 0 |
| HIST FTTS | TP | | NR | NR | NR | NR | NR | 0 |
| DOT OPS | TP | | NR | NR | NR | NR | NR | 0 |
| CONSENT | 1.000 | | 0 | 0 | 0 | 0 | NR | 0 |
| INDIAN RESERV | 1.000 | | 0 | 0 | 0 | 0 | NR | 0 |
| FUSRAP | 1.000 | | 0 | 0 | 0 | 0 | NR | 0 |
| UMTRA | 0.500 | | 0 | 0 | 0 | NR | NR | 0 |
| LEAD SMELTERS | TP | | NR | NR | NR | NR | NR | 0 |
| US AIRS | TP | 1 | NR | NR | NR | NR | NR | 1 |
| US MINES | 0.250 | | 0 | 0 | NR | NR | NR | 0 |
| FINDS | TP | 1 | NR | NR | NR | NR | NR | 1 |
| UXO | 1.000 | | 0 | 0 | 0 | 0 | NR | 0 |
| DOCKET HWC | TP | | NR | NR | NR | NR | NR | 0 |
| CA BOND EXP. PLAN | 1.000 | | 0 | 0 | 0 | 1 | NR | 1 |
| Cortese | 0.500 | | 1 | 0 | 0 | NR | NR | 1 |
| CUPA Listings | 0.250 | | 0 | 0 | NR | NR | NR | 0 |
| DRYCLEANERS | 0.250 | | 0 | 0 | NR | NR | NR | 0 |
| EMI | TP | 3 | NR | NR | NR | NR | NR | 3 |
| ENF | TP | | NR | NR | NR | NR | NR | 0 |
| Financial Assurance | TP | | NR | NR | NR | NR | NR | 0 |
| HAZNET | TP | 2 | NR | NR | NR | NR | NR | 2 |
| HIST CORTESE | 0.500 | | 3 | 2 | 1 | NR | NR | 6 |
| LOS ANGELES CO. HMS | TP | 1 | NR | NR | NR | NR | NR | 1 |
| HWP | 1.000 | | 0 | 1 | 0 | 0 | NR | 1 |

# MAP FINDINGS SUMMARY

| Database | Search Distance (Miles) | Target Property | < 1/8 | 1/8 - 1/4 | 1/4 - 1/2 | 1/2 - 1 | > 1 | Total Plotted |
|---|---|---|---|---|---|---|---|---|
| HWT | 0.250 | | 1 | 0 | NR | NR | NR | 1 |
| MINES | TP | | NR | NR | NR | NR | NR | 0 |
| MWMP | 0.250 | | 0 | 0 | NR | NR | NR | 0 |
| NPDES | TP | 1 | NR | NR | NR | NR | NR | 1 |
| PEST LIC | TP | | NR | NR | NR | NR | NR | 0 |
| PROC | 0.500 | | 0 | 0 | 0 | NR | NR | 0 |
| Notify 65 | 1.000 | | 0 | 0 | 1 | 0 | NR | 1 |
| LA Co. Site Mitigation | TP | | NR | NR | NR | NR | NR | 0 |
| UIC | TP | | NR | NR | NR | NR | NR | 0 |
| WASTEWATER PITS | 0.500 | | 0 | 0 | 0 | NR | NR | 0 |
| WDS | TP | | NR | NR | NR | NR | NR | 0 |
| WIP | 0.250 | 1 | 18 | 51 | NR | NR | NR | 70 |
| ECHO | TP | 1 | NR | NR | NR | NR | NR | 1 |
| FUELS PROGRAM | 0.250 | | 0 | 0 | NR | NR | NR | 0 |
| **EDR HIGH RISK HISTORICAL RECORDS** | | | | | | | | |
| ***EDR Exclusive Records*** | | | | | | | | |
| EDR MGP | 1.000 | | 0 | 0 | 0 | 0 | NR | 0 |
| EDR Hist Auto | 0.125 | | 9 | NR | NR | NR | NR | 9 |
| EDR Hist Cleaner | 0.125 | | 0 | NR | NR | NR | NR | 0 |
| **EDR RECOVERED GOVERNMENT ARCHIVES** | | | | | | | | |
| ***Exclusive Recovered Govt. Archives*** | | | | | | | | |
| RGA LF | TP | | NR | NR | NR | NR | NR | 0 |
| RGA LUST | TP | 2 | NR | NR | NR | NR | NR | 2 |
| - Totals -- | | 28 | 51 | 106 | 21 | 13 | 0 | 219 |

NOTES:

TP = Target Property

NR = Not Requested at this Search Distance

Sites may be listed in more than one database

**A1 Target Property** | **GRAYSON POWER PLANT**
**800 AIR WAY**
**GLENDALE, CA 91201** | **RMP** | **1011826351**
**N/A**

**Site 1 of 15 in cluster A**

**Actual: 468 ft.**

RMP:

| | |
|---|---|
| Facility ID: | 3143 |
| LEPC city: | California Region 1 LEPC |
| Facility decimal latitude: | 34.156111 |
| Facility decimal longitude: | -118.278889 |
| Is facility in county box: | T |
| LatLong method: | I4 |
| LatLong description: | CE |
| Home page web address: | www.ci.glendale.ca.us |
| Facility telephone: | 8185482107 |
| Facility email: | Not reported |
| Facility DUNS #: | 0 |
| Parent's name: | City of Glendale Water & Power |
| Partner's name: | Not reported |
| Parent's DUNS #: | 120244041 |
| Partner's DUNS #: | 0 |
| Operator's name: | City of Glendale Water & Power |
| Operator's telephone: | 8185482107 |
| Operator's address: | 141 North Glendale Avenue |
| Operator's address2: | 4th Level |
| Operators City,St,Zip: | Glendale, CA 91206 4496 |
| RMP implementation contact: | Nick Cruz |
| RMP contact title: | Mechanical Engineer |
| Emergency contact: | Larry Moorehouse |
| Emergency contact title: | Power Plant Superintendent |
| Emergency contact telephone: | 8182418410 |
| 24 hour emergency telephone: | 8185483980 |
| Emergency contact ext/pin #: | Not reported |
| Number of full time employees: | 48 |
| EPA ID: | Not reported |
| Facility ID provided by CEPPO: | 100000038782 |
| Is facility covered by OSHA PSM: | T |
| Is facility covered by EPCRA 302: | T |
| Is fac. covered by CAA Title V 112(2): | T |
| Clean air op. permit/State ID: | 800327 |
| Last safety insp. dat: | Not reported |
| Inspected by: | Never had one |
| Is it OSHA approved with star/merit ranking: | False |
| Will RMP involve predictive filing: | False |
| Submission type: | First Time |
| RMP description: | Not reported |
| Facility has no accident hist. recs: | True |
| Foreign owner's address: | Not reported |
| Foreign owner's zip: | Not reported |
| Foreign owner's country: | Not reported |
| Claim # of employees as CBI: | False |
| Date RMP accepted by EPA: | 1999-06-17 00:00:00 |
| Date of error Report: | Not reported |
| Date RMP received: | 1999-06-16 00:00:00 |
| Does RMP contain graphics files: | False |
| Does RMP contain attachments: | False |
| Was certification letter received: | True |
| RMP submission method: | RMP*Submit |

**GRAYSON POWER PLANT (Continued)** **1011826351**

Does RMP contain CBI substantiation: False
Does RMP contain electronic waiver: False
Date RMP postmarked: 1999-06-15 00:00:00
Is RMP complete: True
Date of de-registration: 2005-11-22 00:00:00
Date de-registration is effective: 2005-07-31 00:00:00
Aniversary date: 2004-06-15 00:00:00
Does RMP contain CBI data: False
Does RMP contain unsanitized CBI version: False
RMP version #: 1.1.5
FRS latitude: 34.159010000000002
FRS longitude: -118.28122
FRS Description: PLANT ENTRANCE (GENERAL)
FRS Method: ADDRESS MATCHING-HOUSE NUMBER

RMP:
Process ID: 3520
NA & Industry Classification Sys.code(s): 221119
NAICS code description: Other Electric Power Generation
Optional facility description: Chlorination
Program level: 3
Record contains CBI data: False

RMP:
Chemical name: Public OCA Chemical
Process chemical qty in 100s lbs: 0
Process flammable chemical name: Not reported

RMP:
Percent weight of chemical: Not reported
Physical state: c
Analytical basic: EPA's RMP Guidance for Waste Water Treatment Plants Reference Tables or Equations
Scenario: Not reported
Quantity released in pounds: Not reported
Release duration in minutes: Not reported
Release rate in pounds per second: Not reported
Wind speed in meters/second: 3
Stability class: D
Topography: a
Distance to endpoint in miles: Not reported
Residential population: Not reported
Public receptors: Not reported
Environmental receptors: Not reported
Passive mitigation: Enclosures
Active mitigation: Not reported

RMP:
Percent weight of chemical: Not reported
Physical state: c
Analytical basic: EPA's RMP Guidance for Waste Water Treatment Plants Reference Tables or Equations
Scenario: Not reported
Quantity released in pounds: Not reported
Release duration in minutes: 10
Release rate in pounds per second: Not reported
Wind speed in meters/second: 1.5
Stability class: F
Topography: a
Distance to endpoint in miles: Not reported

**GRAYSON POWER PLANT (Continued)** **1011826351**

Residential population: Not reported
Public receptors: Not reported
Environmental receptors: Not reported
Passive mitigation: Enclosures

RMP:
Endpoint used: Not reported
LFL value: Not reported
Analytical basic: Not reported
Scenario: Not reported
Quantity released in pounds: Not reported
Distance to endpoint in miles: Not reported
Residential population: Not reported
Public receptors: Not reported
Environmental receptors: Not reported
Passive mitigation: Not reported
Active mitigation: Not reported

RMP:
Analytical basic: Not reported
Quantity released in pounds: Not reported
Distance to endpoint in miles: Not reported
Residential population: Not reported
Public receptors: Not reported
Environmental receptors: Not reported
Passive mitigation: Not reported
Safety review date: Not reported
Most recent PHA date: Not reported
Process Hazard Analysis: Not reported
Expected PHA changes completion date: Not reported
Major Hazard: Not reported
Process Control: Not reported
Mitigation Systems: Not reported
Monitoring/Detection: Not reported
Changes since the last process hazard analysis: Not reported
Most recent review of op. procedures: Not reported
Most recent training progs review/update: Not reported
Training: Not reported
Competency testing: Not reported
Most recent maintenance review date: Not reported
Most recent equipment inspection date: Not reported
Equipment tested: Not reported
Most recent changes by mgmt: Not reported
Date of most recent review/update: Not reported
Date of pre-start review: Not reported
Most recent compliance audit date: Not reported
Expected date of audit completion: Not reported
Most recent incident investigation: Not reported
Expected date of investigation changes: Not reported
Date of participation plan review: Not reported
Date of hot work permit review: Not reported
Date of contractor safety review: Not reported
Date of contractor safety eval. review: Not reported
Record has CBI data: Not reported
Safety review date: Not reported
Federal Regulation: Not reported
Federal regulation comment: Not reported
Major Hazard: Not reported

**GRAYSON POWER PLANT (Continued)** **1011826351**

| | |
|---|---|
| Process Control: | Not reported |
| Mitigation Systems: | Not reported |
| Monitoring/Detection: | Not reported |
| Changes since the last process hazard analysis: | Not reported |
| Most recent hazard review/update: | Not reported |
| Most recent review of op. procedures: | Not reported |
| Most recent training progs review/update: | Not reported |
| Expected completion of review changes: | Not reported |
| Training: | Not reported |
| Competency testing: | Not reported |
| Most recent maintenance review date: | Not reported |
| Most recent equipment inspection date: | Not reported |
| Equipment tested: | Not reported |
| Most recent compliance audit date: | Not reported |
| Expected date of audit completion: | Not reported |
| Most recent incident investigation: | Not reported |
| Expected date of investigation changes: | Not reported |
| Record has CBI data: | Not reported |
| Date of most recent changes: | Not reported |
| Chemical name: | Chlorine |
| Process chemical qty in 100s lbs: | 10000 |
| Process flammable chemical name: | Not reported |

RMP:

| | |
|---|---|
| Percent weight of chemical: | Not reported |
| Physical state: | Not reported |
| Analytical basic: | Not reported |
| Scenario: | Not reported |
| Quantity released in pounds: | Not reported |
| Release duration in minutes: | Not reported |
| Release rate in pounds per second: | Not reported |
| Wind speed in meters/second: | Not reported |
| Stability class: | Not reported |
| Topography: | Not reported |
| Distance to endpoint in miles: | Not reported |
| Residential population: | Not reported |
| Public receptors: | Not reported |
| Environmental receptors: | Not reported |
| Passive mitigation: | Not reported |
| Active mitigation: | Not reported |

RMP:

| | |
|---|---|
| Percent weight of chemical: | Not reported |
| Physical state: | Not reported |
| Analytical basic: | Not reported |
| Scenario: | Not reported |
| Quantity released in pounds: | Not reported |
| Release duration in minutes: | Not reported |
| Release rate in pounds per second: | Not reported |
| Wind speed in meters/second: | Not reported |
| Stability class: | Not reported |
| Topography: | Not reported |
| Distance to endpoint in miles: | Not reported |
| Residential population: | Not reported |
| Public receptors: | Not reported |
| Environmental receptors: | Not reported |
| Passive mitigation: | Not reported |

**GRAYSON POWER PLANT (Continued)** **1011826351**

RMP:

| | |
|---|---|
| Endpoint used: | Not reported |
| LFL value: | Not reported |
| Analytical basic: | Not reported |
| Scenario: | Not reported |
| Quantity released in pounds: | Not reported |
| Distance to endpoint in miles: | Not reported |
| Residential population: | Not reported |
| Public receptors: | Not reported |
| Environmental receptors: | Not reported |
| Passive mitigation: | Not reported |
| Active mitigation: | Not reported |

RMP:

| | |
|---|---|
| Analytical basic: | Not reported |
| Quantity released in pounds: | Not reported |
| Distance to endpoint in miles: | Not reported |
| Residential population: | Not reported |
| Public receptors: | Not reported |
| Environmental receptors: | Not reported |
| Passive mitigation: | Not reported |
| Safety review date: | Not reported |
| Most recent PHA date: | Not reported |
| Process Hazard Analysis: | Not reported |
| Expected PHA changes completion date: | Not reported |
| Major Hazard: | Not reported |
| Process Control: | Not reported |
| Mitigation Systems: | Not reported |
| Monitoring/Detection: | Not reported |
| Changes since the last process hazard analysis: | Not reported |
| Most recent review of op. procedures: | Not reported |
| Most recent training progs review/update: | Not reported |
| Training: | Not reported |
| Competency testing: | Not reported |
| Most recent maintenance review date: | Not reported |
| Most recent equipment inspection date: | Not reported |
| Equipment tested: | Not reported |
| Most recent changes by mgmt: | Not reported |
| Date of most recent review/update: | Not reported |
| Date of pre-start review: | Not reported |
| Most recent compliance audit date: | Not reported |
| Expected date of audit completion: | Not reported |
| Most recent incident investigation: | Not reported |
| Expected date of investigation changes: | Not reported |
| Date of participation plan review: | Not reported |
| Date of hot work permit review: | Not reported |
| Date of contractor safety review: | Not reported |
| Date of contractor safety eval. review: | Not reported |
| Record has CBI data: | Not reported |
| Safety review date: | Not reported |
| Federal Regulation: | Not reported |
| Federal regulation comment: | Not reported |
| Major Hazard: | Not reported |
| Process Control: | Not reported |
| Mitigation Systems: | Not reported |
| Monitoring/Detection: | Not reported |
| Changes since the last process hazard analysis: | Not reported |

**GRAYSON POWER PLANT (Continued)** **1011826351**

| | |
|---|---|
| Most recent hazard review/update: | Not reported |
| Most recent review of op. procedures: | Not reported |
| Most recent training progs review/update: | Not reported |
| Expected completion of review changes: | Not reported |
| Training: | Not reported |
| Competency testing: | Not reported |
| Most recent maintenance review date: | Not reported |
| Most recent equipment inspection date: | Not reported |
| Equipment tested: | Not reported |
| Most recent compliance audit date: | Not reported |
| Expected date of audit completion: | Not reported |
| Most recent incident investigation: | Not reported |
| Expected date of investigation changes: | Not reported |
| Record has CBI data: | Not reported |
| Date of most recent changes: | Not reported |

RMP:

| | |
|---|---|
| ER plan: | Not reported |
| ER plan most recent review date: | 1998-07-28 00:00:00 |
| ER plan most recent employee training date: | 1999-05-06 00:00:00 |
| Local agency coordinating ER plan: | City of Glendale Fire Division |
| Telephone of the coordinating local agency: | 8185484030 |
| Federal regulation: | True |
| OSHA 1910 120: | True |
| SPCC: | False |
| RCRA: | False |
| OPA 90: | False |
| EPCRA: | True |
| Other Regulations: | Not reported |

---

**A2 Target Property** **GLENDALE PUBLIC SERVICES DEPARTMENT** **ENVIROSTOR** **U001566858**
**800 AIR WAY** **HIST UST** **N/A**
**GLENDALE, CA 91201** **CHMIRS**
**NPDES**

**Site 2 of 15 in cluster A**

**Actual: 468 ft.**

ENVIROSTOR:

| | |
|---|---|
| Facility ID: | 19490185 |
| Status: | Refer: Other Agency |
| Status Date: | 05/01/1984 |
| Site Code: | Not reported |
| Site Type: | Historical |
| Site Type Detailed: | * Historical |
| Acres: | Not reported |
| NPL: | NO |
| Regulatory Agencies: | NONE SPECIFIED |
| Lead Agency: | NONE SPECIFIED |
| Program Manager: | Not reported |
| Supervisor: | Referred - Not Assigned |
| Division Branch: | Cleanup Chatsworth |
| Assembly: | 43 |
| Senate: | 25 |
| Special Program: | * RCRA 3012 - Past Haz Waste Disp Inven Site |
| Restricted Use: | NO |
| Site Mgmt Req: | NONE SPECIFIED |
| Funding: | Not reported |
| Latitude: | 34.15888 |
| Longitude: | -118.2808 |

**GLENDALE PUBLIC SERVICES DEPARTMENT (Continued)** **U001566858**

APN: NONE SPECIFIED
Past Use: NONE SPECIFIED
Potential COC: Polychlorinated biphenyls (PCBs
Confirmed COC: NONE SPECIFIED
Potential Description: NONE SPECIFIED
Alias Name: CAD980735864
Alias Type: EPA Identification Number
Alias Name: 110013829330
Alias Type: EPA (FRS #)
Alias Name: 19490185
Alias Type: Envirostor ID Number

Completed Info:
Completed Area Name: PROJECT WIDE
Completed Sub Area Name: Not reported
Completed Document Type: Preliminary Assessment Report
Completed Date: 05/01/1984
Comments: PERMIT(OTHER) DHS. EXTREMELY HAZ WASTE PERMIT ON 8/16/ 83,6/14/82,2/16/82,8/19/81,9/18/80,11/8/ 79. SOURCE ACT: W.FELL LETTER 6/29/80 - INDIVIDUAL PCB LG HIGH VOLTAGE CAPACITRS TEMPORARY STORAGE OF PCB CAPACITORS(TO83 CURRENTLY ELECTRICAL GENERATING PLANT FAC TYPE: T/C W/ MR.MACKLEHENNIE,GLENDAL PUBLIC SERV. 818-956-3910 - CAPACITOR BANKS. PCB STORAGE IN DEPT OF TRANS, STORAGE IN COMPLIANCE W/ TSCA. FINAL STRATEGY RECOM - CONTINUE TO BE MONITORED. SUBMIT TO EPA PRELIM ASSESS DONE RCRA 3012

Completed Area Name: PROJECT WIDE
Completed Sub Area Name: Not reported
Completed Document Type: * Discovery
Completed Date: 09/26/1983
Comments: FACILITY IDENTIFIED ID FROM ERRIS

Future Area Name: Not reported
Future Sub Area Name: Not reported
Future Document Type: Not reported
Future Due Date: Not reported
Schedule Area Name: Not reported
Schedule Sub Area Name: Not reported
Schedule Document Type: Not reported
Schedule Due Date: Not reported
Schedule Revised Date: Not reported

HIST UST:
File Number: 0002700E
URL: http://geotracker.waterboards.ca.gov/ustpdfs/pdf/0002700E.pdf
Region: STATE
Facility ID: 00000020659
Facility Type: Other
Other Type: CORPORATE YARD
Contact Name: SHOP SUPERINTENDENT
Telephone: 8189562001
Owner Name: CITY OF GLENDALE
Owner Address: 613 EAST BROADWAY
Owner City,St,Zip: GLENDALE, CA 91205
Total Tanks: 0004

Tank Num: 001

**GLENDALE PUBLIC SERVICES DEPARTMENT (Continued)** **U001566858**

| | |
|---|---|
| Container Num: | 1 |
| Year Installed: | 1959 |
| Tank Capacity: | 00010000 |
| Tank Used for: | PRODUCT |
| Type of Fuel: | UNLEADED |
| Container Construction Thickness: | 1/4 |
| Leak Detection: | Visual, Stock Inventor |

| | |
|---|---|
| Tank Num: | 002 |
| Container Num: | 2 |
| Year Installed: | 1959 |
| Tank Capacity: | 00010000 |
| Tank Used for: | PRODUCT |
| Type of Fuel: | REGULAR |
| Container Construction Thickness: | 1/4 |
| Leak Detection: | Visual, Stock Inventor |

| | |
|---|---|
| Tank Num: | 003 |
| Container Num: | 3 |
| Year Installed: | 1959 |
| Tank Capacity: | 00010000 |
| Tank Used for: | PRODUCT |
| Type of Fuel: | REGULAR |
| Container Construction Thickness: | 1/4 |
| Leak Detection: | Visual, Stock Inventor |

| | |
|---|---|
| Tank Num: | 004 |
| Container Num: | 4 |
| Year Installed: | 1959 |
| Tank Capacity: | 00001000 |
| Tank Used for: | WASTE |
| Type of Fuel: | WASTE OIL |
| Container Construction Thickness: | 3/16 |
| Leak Detection: | Visual |

Click here for Geo Tracker PDF:

CHMIRS:

| | |
|---|---|
| OES Incident Number: | 8-4155 |
| OES notification: | 09/10/1998 |
| OES Date: | Not reported |
| OES Time: | Not reported |
| **Date Completed:** | **Not reported** |
| Property Use: | Not reported |
| Agency Id Number: | Not reported |
| Agency Incident Number: | Not reported |
| Time Notified: | Not reported |
| Time Completed: | Not reported |
| Surrounding Area: | Not reported |
| Estimated Temperature: | Not reported |
| Property Management: | Not reported |
| More Than Two Substances Involved?: | Not reported |
| Resp Agncy Personel # Of Decontaminated: | Not reported |
| Responding Agency Personel # Of Injuries: | Not reported |
| Responding Agency Personel # Of Fatalities: | Not reported |
| Others Number Of Decontaminated: | Not reported |
| Others Number Of Injuries: | Not reported |

**GLENDALE PUBLIC SERVICES DEPARTMENT (Continued)** **U001566858**

| | |
|---|---|
| Others Number Of Fatalities: | Not reported |
| Vehicle Make/year: | Not reported |
| Vehicle License Number: | Not reported |
| Vehicle State: | Not reported |
| Vehicle Id Number: | Not reported |
| CA DOT PUC/ICC Number: | Not reported |
| Company Name: | Not reported |
| Reporting Officer Name/ID: | Not reported |
| Report Date: | Not reported |
| Facility Telephone: | Not reported |
| Waterway Involved: | Yes |
| Waterway: | Los Angeles River |
| Spill Site: | Not reported |
| Cleanup By: | Contractor |
| Containment: | Not reported |
| What Happened: | Not reported |
| Type: | Not reported |
| Measure: | Not reported |
| Other: | Not reported |
| Date/Time: | Not reported |
| Year: | 1998 |
| Agency: | Glendale Fire Hazmat 27 |
| Incident Date: | 9/10/199812:00:00 AM |
| Admin Agency: | Glendale Fire Department |
| Amount: | Not reported |
| Contained: | Yes |
| Site Type: | Utilities/Substation |
| E Date: | Not reported |
| Substance: | Fuel oil #6 |
| Gallons: | 10 |
| Unknown: | 0 |
| Substance #2: | Not reported |
| Substance #3: | Not reported |
| Evacuations: | 0 |
| Number of Injuries: | 0 |
| Number of Fatalities: | 0 |
| #1 Pipeline: | Not reported |
| #2 Pipeline: | Not reported |
| #3 Pipeline: | Not reported |
| #1 Vessel >= 300 Tons: | Not reported |
| #2 Vessel >= 300 Tons: | Not reported |
| #3 Vessel >= 300 Tons: | Not reported |
| Evacs: | Not reported |
| Injuries: | Not reported |
| Fatals: | Not reported |
| Comments: | Not reported |
| Description: | Overfill of a transfer between two tanks. Substance did make it to the storm drains and into the LA River. |

NPDES:

| | |
|---|---|
| Npdes Number: | CAS000001 |
| Facility Status: | Active |
| Agency Id: | 0 |
| Region: | 4 |
| Regulatory Measure Id: | 188828 |
| Order No: | 97-03-DWQ |

**GLENDALE PUBLIC SERVICES DEPARTMENT (Continued)** **U001566858**

| | |
|---|---|
| Regulatory Measure Type: | Enrollee |
| Place Id: | Not reported |
| WDID: | 4 19I001606 |
| Program Type: | Industrial |
| Adoption Date Of Regulatory Measure: | Not reported |
| Effective Date Of Regulatory Measure: | 03/27/1992 |
| Expiration Date Of Regulatory Measure: | Not reported |
| Termination Date Of Regulatory Measure: | Not reported |
| Discharge Name: | City of Glendale Grayson Power Plant |
| Discharge Address: | 800 Air Way |
| Discharge City: | Glendale |
| Discharge State: | California |
| Discharge Zip: | 91201 |
| RECEIVED DATE: | Not reported |
| PROCESSED DATE: | Not reported |
| STATUS CODE NAME: | Not reported |
| STATUS DATE: | Not reported |
| PLACE SIZE: | Not reported |
| PLACE SIZE UNIT: | Not reported |
| FACILITY CONTACT NAME: | Not reported |
| FACILITY CONTACT TITLE: | Not reported |
| FACILITY CONTACT PHONE: | Not reported |
| FACILITY CONTACT PHONE EXT: | Not reported |
| FACILITY CONTACT EMAIL: | Not reported |
| OPERATOR NAME: | Not reported |
| OPERATOR ADDRESS: | Not reported |
| OPERATOR CITY: | Not reported |
| OPERATOR STATE: | Not reported |
| OPERATOR ZIP: | Not reported |
| OPERATOR CONTACT NAME: | Not reported |
| OPERATOR CONTACT TITLE: | Not reported |
| OPERATOR CONTACT PHONE: | Not reported |
| OPERATOR CONTACT PHONE EXT: | Not reported |
| OPERATOR CONTACT EMAIL: | Not reported |
| OPERATOR TYPE: | Not reported |
| DEVELOPER NAME: | Not reported |
| DEVELOPER ADDRESS: | Not reported |
| DEVELOPER CITY: | Not reported |
| DEVELOPER STATE: | Not reported |
| DEVELOPER ZIP: | Not reported |
| DEVELOPER CONTACT NAME: | Not reported |
| DEVELOPER CONTACT TITLE: | Not reported |
| CONSTYPE LINEAR UTILITY IND: | Not reported |
| EMERGENCY PHONE NO: | Not reported |
| EMERGENCY PHONE EXT: | Not reported |
| CONSTYPE ABOVE GROUND IND: | Not reported |
| CONSTYPE BELOW GROUND IND: | Not reported |
| CONSTYPE CABLE LINE IND: | Not reported |
| CONSTYPE COMM LINE IND: | Not reported |
| CONSTYPE COMMERTIAL IND: | Not reported |
| CONSTYPE ELECTRICAL LINE IND: | Not reported |
| CONSTYPE GAS LINE IND: | Not reported |
| CONSTYPE INDUSTRIAL IND: | Not reported |
| CONSTYPE OTHER DESRIPTION: | Not reported |
| CONSTYPE OTHER IND: | Not reported |
| CONSTYPE RECONS IND: | Not reported |
| CONSTYPE RESIDENTIAL IND: | Not reported |

**GLENDALE PUBLIC SERVICES DEPARTMENT (Continued)** **U001566858**

| | |
|---|---|
| CONSTYPE TRANSPORT IND: | Not reported |
| CONSTYPE UTILITY DESCRIPTION: | Not reported |
| CONSTYPE UTILITY IND: | Not reported |
| CONSTYPE WATER SEWER IND: | Not reported |
| DIR DISCHARGE USWATER IND: | Not reported |
| RECEIVING WATER NAME: | Not reported |
| CERTIFIER NAME: | Not reported |
| CERTIFIER TITLE: | Not reported |
| CERTIFICATION DATE: | Not reported |
| PRIMARY SIC: | Not reported |
| SECONDARY SIC: | Not reported |
| TERTIARY SIC: | Not reported |
| | |
| Npdes Number: | Not reported |
| Facility Status: | Not reported |
| Agency Id: | Not reported |
| Region: | 4 |
| Regulatory Measure Id: | 188828 |
| Order No: | Not reported |
| Regulatory Measure Type: | Industrial |
| Place Id: | Not reported |
| WDID: | 4 19I001606 |
| Program Type: | Not reported |
| Adoption Date Of Regulatory Measure: | Not reported |
| Effective Date Of Regulatory Measure: | Not reported |
| Expiration Date Of Regulatory Measure: | Not reported |
| Termination Date Of Regulatory Measure: | Not reported |
| Discharge Name: | Not reported |
| Discharge Address: | Not reported |
| Discharge City: | Not reported |
| Discharge State: | Not reported |
| Discharge Zip: | Not reported |
| RECEIVED DATE: | 5/9/2008 |
| PROCESSED DATE: | 3/27/1992 |
| STATUS CODE NAME: | Active |
| STATUS DATE: | 3/27/1992 |
| PLACE SIZE: | 10 |
| PLACE SIZE UNIT: | Acres |
| FACILITY CONTACT NAME: | John Escudero |
| FACILITY CONTACT TITLE: | Power Plant Superintendent |
| FACILITY CONTACT PHONE: | 818-548-2148 |
| FACILITY CONTACT PHONE EXT: | Not reported |
| FACILITY CONTACT EMAIL: | JEscudero@ci.glendale.ca.us |
| OPERATOR NAME: | City of Glendale Grayson Power Plant |
| OPERATOR ADDRESS: | 800 Air Way |
| OPERATOR CITY: | Glendale |
| OPERATOR STATE: | California |
| OPERATOR ZIP: | 91201 |
| OPERATOR CONTACT NAME: | Ramon Abueg |
| OPERATOR CONTACT TITLE: | Chief Assistant General Manager |
| OPERATOR CONTACT PHONE: | 818-548-3297 |
| OPERATOR CONTACT PHONE EXT: | Not reported |
| OPERATOR CONTACT EMAIL: | RAbueg@ci.glendale.ca.us |
| OPERATOR TYPE: | City/Town Agency |
| DEVELOPER NAME: | Not reported |
| DEVELOPER ADDRESS: | Not reported |
| DEVELOPER CITY: | Not reported |

**GLENDALE PUBLIC SERVICES DEPARTMENT (Continued)** **U001566858**

| | |
|---|---|
| DEVELOPER STATE: | California |
| DEVELOPER ZIP: | Not reported |
| DEVELOPER CONTACT NAME: | Not reported |
| DEVELOPER CONTACT TITLE: | Not reported |
| CONSTYPE LINEAR UTILITY IND: | Not reported |
| EMERGENCY PHONE NO: | Not reported |
| EMERGENCY PHONE EXT: | Not reported |
| CONSTYPE ABOVE GROUND IND: | Not reported |
| CONSTYPE BELOW GROUND IND: | Not reported |
| CONSTYPE CABLE LINE IND: | Not reported |
| CONSTYPE COMM LINE IND: | Not reported |
| CONSTYPE COMMERTIAL IND: | Not reported |
| CONSTYPE ELECTRICAL LINE IND: | Not reported |
| CONSTYPE GAS LINE IND: | Not reported |
| CONSTYPE INDUSTRIAL IND: | Not reported |
| CONSTYPE OTHER DESRIPTION: | Not reported |
| CONSTYPE OTHER IND: | Not reported |
| CONSTYPE RECONS IND: | Not reported |
| CONSTYPE RESIDENTIAL IND: | Not reported |
| CONSTYPE TRANSPORT IND: | Not reported |
| CONSTYPE UTILITY DESCRIPTION: | Not reported |
| CONSTYPE UTILITY IND: | Not reported |
| CONSTYPE WATER SEWER IND: | Not reported |
| DIR DISCHARGE USWATER IND: | N |
| RECEIVING WATER NAME: | Los Angeles River |
| CERTIFIER NAME: | John Escudero |
| CERTIFIER TITLE: | Power Plant Operations Supervisor |
| CERTIFICATION DATE: | 11-JUN-15 |
| PRIMARY SIC: | 4911-Electric Services |
| SECONDARY SIC: | Not reported |
| TERTIARY SIC: | Not reported |

---

**A3 Target Property** **GWP UTILITY OPERATIONS CENTER STORAGE** **RMP** **1011826652**
**800 AIR WAY** **N/A**
**GLENDALE, CA 91201**

**Site 3 of 15 in cluster A**

**Actual: 468 ft.**

RMP:

| | |
|---|---|
| Facility ID: | 40483 |
| LEPC city: | California Region 1 LEPC |
| Facility decimal latitude: | 34.156679 |
| Facility decimal longitude: | -118.278259 |
| Is facility in county box: | T |
| LatLong method: | I4 |
| LatLong description: | CE |
| Home page web address: | Not reported |
| Facility telephone: | 8185482011 |
| Facility email: | Not reported |
| Facility DUNS #: | 120244041 |
| Parent's name: | City of Glendale Water & Power |
| Partner's name: | Not reported |
| Parent's DUNS #: | 0 |
| Partner's DUNS #: | 0 |
| Operator's name: | GWP (c/o William Vinther) |
| Operator's telephone: | 8185482011 |
| Operator's address: | 141 North Glendale Avenue |
| Operator's address2: | 4th Level |

**GWP UTILITY OPERATIONS CENTER STORAGE (Continued)** **1011826652**

| | |
|---|---|
| Operators City,St,Zip: | Glendale, CA 91206 |
| RMP implementation contact: | William Vinther |
| RMP contact title: | Water Superintendent |
| Emergency contact: | Tim Doyle |
| Emergency contact title: | Safety Coordinator |
| Emergency contact telephone: | 8185482011 |
| 24 hour emergency telephone: | 8189736739 |
| Emergency contact ext/pin #: | Not reported |
| Number of full time employees: | 0 |
| EPA ID: | Not reported |
| Facility ID provided by CEPPO: | 100000038782 |
| Is facility covered by OSHA PSM: | T |
| Is facility covered by EPCRA 302: | T |
| Is fac. covered by CAA Title V 112(2): | F |
| Clean air op. permit/State ID: | Not reported |
| Last safety insp. dat: | Not reported |
| Inspected by: | Never had one |
| Is it OSHA approved with star/merit ranking: | False |
| Will RMP involve predictive filing: | False |
| Submission type: | Resubmission |
| RMP description: | Not reported |
| Facility has no accident hist. recs: | True |
| Foreign owner's address: | Not reported |
| Foreign owner's zip: | Not reported |
| Foreign owner's country: | Not reported |
| Claim # of employees as CBI: | False |
| Date RMP accepted by EPA: | 2004-09-24 00:00:00 |
| Date of error Report: | Not reported |
| Date RMP received: | 2004-09-20 00:00:00 |
| Does RMP contain graphics files: | False |
| Does RMP contain attachments: | False |
| Was certification letter received: | True |
| RMP submission method: | RMP*Submit |
| Does RMP contain CBI substantiation: | False |
| Does RMP contain electronic waiver: | False |
| Date RMP postmarked: | 2004-09-16 00:00:00 |
| Is RMP complete: | True |
| Date of de-registration: | 2005-11-22 00:00:00 |
| Date de-registration is effective: | 2005-07-31 00:00:00 |
| Aniversary date: | 2009-09-16 00:00:00 |
| Does RMP contain CBI data: | False |
| Does RMP contain unsanitized CBI version: | False |
| RMP version #: | 3.3 |
| FRS latitude: | 34.159010000000002 |
| FRS longitude: | -118.28122 |
| FRS Description: | PLANT ENTRANCE (GENERAL) |
| FRS Method: | ADDRESS MATCHING-HOUSE NUMBER |

RMP:

| | |
|---|---|
| Process ID: | 58153 |
| NA & Industry Classification Sys.code(s): | 22131 |
| NAICS code description: | Water Supply and Irrigation Systems |
| Optional facility description: | Chlorination |
| Program level: | 3 |
| Record contains CBI data: | False |

RMP:

**GWP UTILITY OPERATIONS CENTER STORAGE (Continued)** **1011826652**

Chemical name: Chlorine
Process chemical qty in 100s lbs: 3800
Process flammable chemical name: Not reported

RMP:
Percent weight of chemical: Not reported
Physical state: Not reported
Analytical basic: Not reported
Scenario: Not reported
Quantity released in pounds: Not reported
Release duration in minutes: Not reported
Release rate in pounds per second: Not reported
Wind speed in meters/second: Not reported
Stability class: Not reported
Topography: Not reported
Distance to endpoint in miles: Not reported
Residential population: Not reported
Public receptors: Not reported
Environmental receptors: Not reported
Passive mitigation: Not reported
Active mitigation: Not reported

RMP:
Percent weight of chemical: Not reported
Physical state: Not reported
Analytical basic: Not reported
Scenario: Not reported
Quantity released in pounds: Not reported
Release duration in minutes: Not reported
Release rate in pounds per second: Not reported
Wind speed in meters/second: Not reported
Stability class: Not reported
Topography: Not reported
Distance to endpoint in miles: Not reported
Residential population: Not reported
Public receptors: Not reported
Environmental receptors: Not reported
Passive mitigation: Not reported

RMP:
Endpoint used: Not reported
LFL value: Not reported
Analytical basic: Not reported
Scenario: Not reported
Quantity released in pounds: Not reported
Distance to endpoint in miles: Not reported
Residential population: Not reported
Public receptors: Not reported
Environmental receptors: Not reported
Passive mitigation: Not reported
Active mitigation: Not reported

RMP:
Analytical basic: Not reported
Quantity released in pounds: Not reported
Distance to endpoint in miles: Not reported
Residential population: Not reported
Public receptors: Not reported
Environmental receptors: Not reported

**GWP UTILITY OPERATIONS CENTER STORAGE (Continued)** **1011826652**

Passive mitigation: Not reported
Safety review date: Not reported
Most recent PHA date: Not reported
Process Hazard Analysis: Not reported
Expected PHA changes completion date: Not reported
Major Hazard: Not reported
Process Control: Not reported
Mitigation Systems: Not reported
Monitoring/Detection: Not reported
Changes since the last process hazard analysis: Not reported
Most recent review of op. procedures: Not reported
Most recent training progs review/update: Not reported
Training: Not reported
Competency testing: Not reported
Most recent maintenance review date: Not reported
Most recent equipment inspection date: Not reported
Equipment tested: Not reported
Most recent changes by mgmt: Not reported
Date of most recent review/update: Not reported
Date of pre-start review: Not reported
Most recent compliance audit date: Not reported
Expected date of audit completion: Not reported
Most recent incident investigation: Not reported
Expected date of investigation changes: Not reported
Date of participation plan review: Not reported
Date of hot work permit review: Not reported
Date of contractor safety review: Not reported
Date of contractor safety eval. review: Not reported
Record has CBI data: Not reported
Safety review date: Not reported
Federal Regulation: Not reported
Federal regulation comment: Not reported
Major Hazard: Not reported
Process Control: Not reported
Mitigation Systems: Not reported
Monitoring/Detection: Not reported
Changes since the last process hazard analysis: Not reported
Most recent hazard review/update: Not reported
Most recent review of op. procedures: Not reported
Most recent training progs review/update: Not reported
Expected completion of review changes: Not reported
Training: Not reported
Competency testing: Not reported
Most recent maintenance review date: Not reported
Most recent equipment inspection date: Not reported
Equipment tested: Not reported
Most recent compliance audit date: Not reported
Expected date of audit completion: Not reported
Most recent incident investigation: Not reported
Expected date of investigation changes: Not reported
Record has CBI data: Not reported
Date of most recent changes: Not reported
Chemical name: Public OCA Chemical
Process chemical qty in 100s lbs: 0
Process flammable chemical name: Not reported

RMP:
Percent weight of chemical: Not reported

**GWP UTILITY OPERATIONS CENTER STORAGE (Continued)** **1011826652**

Physical state: c
Analytical basic: EPA's RMP Guidance for Waste Water Treatment Plants Reference Tables or Equations
Scenario: Not reported
Quantity released in pounds: Not reported
Release duration in minutes: Not reported
Release rate in pounds per second: Not reported
Wind speed in meters/second: 3
Stability class: D
Topography: a
Distance to endpoint in miles: Not reported
Residential population: Not reported
Public receptors: Not reported
Environmental receptors: Not reported
Passive mitigation: Not reported
Active mitigation: Not reported

RMP:
Percent weight of chemical: Not reported
Physical state: c
Analytical basic: EPA's RMP Guidance for Waste Water Treatment Plants Reference Tables or Equations
Scenario: Not reported
Quantity released in pounds: Not reported
Release duration in minutes: 10
Release rate in pounds per second: Not reported
Wind speed in meters/second: 1.5
Stability class: F
Topography: a
Distance to endpoint in miles: Not reported
Residential population: Not reported
Public receptors: Not reported
Environmental receptors: Not reported
Passive mitigation: Not reported

RMP:
Endpoint used: Not reported
LFL value: Not reported
Analytical basic: Not reported
Scenario: Not reported
Quantity released in pounds: Not reported
Distance to endpoint in miles: Not reported
Residential population: Not reported
Public receptors: Not reported
Environmental receptors: Not reported
Passive mitigation: Not reported
Active mitigation: Not reported

RMP:
Analytical basic: Not reported
Quantity released in pounds: Not reported
Distance to endpoint in miles: Not reported
Residential population: Not reported
Public receptors: Not reported
Environmental receptors: Not reported
Passive mitigation: Not reported
Safety review date: Not reported
Most recent PHA date: Not reported
Process Hazard Analysis: Not reported
Expected PHA changes completion date: Not reported
Major Hazard: Not reported

**GWP UTILITY OPERATIONS CENTER STORAGE (Continued)** **1011826652**

| | |
|---|---|
| Process Control: | Not reported |
| Mitigation Systems: | Not reported |
| Monitoring/Detection: | Not reported |
| Changes since the last process hazard analysis: | Not reported |
| Most recent review of op. procedures: | Not reported |
| Most recent training progs review/update: | Not reported |
| Training: | Not reported |
| Competency testing: | Not reported |
| Most recent maintenance review date: | Not reported |
| Most recent equipment inspection date: | Not reported |
| Equipment tested: | Not reported |
| Most recent changes by mgmt: | Not reported |
| Date of most recent review/update: | Not reported |
| Date of pre-start review: | Not reported |
| Most recent compliance audit date: | Not reported |
| Expected date of audit completion: | Not reported |
| Most recent incident investigation: | Not reported |
| Expected date of investigation changes: | Not reported |
| Date of participation plan review: | Not reported |
| Date of hot work permit review: | Not reported |
| Date of contractor safety review: | Not reported |
| Date of contractor safety eval. review: | Not reported |
| Record has CBI data: | Not reported |
| Safety review date: | Not reported |
| Federal Regulation: | Not reported |
| Federal regulation comment: | Not reported |
| Major Hazard: | Not reported |
| Process Control: | Not reported |
| Mitigation Systems: | Not reported |
| Monitoring/Detection: | Not reported |
| Changes since the last process hazard analysis: | Not reported |
| Most recent hazard review/update: | Not reported |
| Most recent review of op. procedures: | Not reported |
| Most recent training progs review/update: | Not reported |
| Expected completion of review changes: | Not reported |
| Training: | Not reported |
| Competency testing: | Not reported |
| Most recent maintenance review date: | Not reported |
| Most recent equipment inspection date: | Not reported |
| Equipment tested: | Not reported |
| Most recent compliance audit date: | Not reported |
| Expected date of audit completion: | Not reported |
| Most recent incident investigation: | Not reported |
| Expected date of investigation changes: | Not reported |
| Record has CBI data: | Not reported |
| Date of most recent changes: | Not reported |

RMP:

| | |
|---|---|
| ER plan: | Not reported |
| ER plan most recent review date: | Not reported |
| ER plan most recent employee training date: | Not reported |
| Local agency coordinating ER plan: | City of Glendale Fire Division |
| Telephone of the coordinating local agency: | 8185484030 |
| Federal regulation: | True |
| OSHA 1910 120: | False |
| SPCC: | False |
| RCRA: | False |
| OPA 90: | False |

**GWP UTILITY OPERATIONS CENTER STORAGE (Continued)** **1011826652**

| | |
|---|---|
| EPCRA: | True |
| Other Regulations: | Not reported |

---

**A4**
**Target Property**
**Actual: 468 ft.**

**800 AIRWAYS ST.**
**GLENDALE, CA**

**CHMIRS** **S109040777**
**N/A**

**Site 4 of 15 in cluster A**

CHMIRS:

| | |
|---|---|
| OES Incident Number: | 6-6843 |
| OES notification: | 11/17/2006 |
| OES Date: | Not reported |
| OES Time: | Not reported |
| **Date Completed:** | **Not reported** |
| Property Use: | Not reported |
| Agency Id Number: | Not reported |
| Agency Incident Number: | Not reported |
| Time Notified: | Not reported |
| Time Completed: | Not reported |
| Surrounding Area: | Not reported |
| Estimated Temperature: | Not reported |
| Property Management: | Not reported |
| More Than Two Substances Involved?: | Not reported |
| Resp Agncy Personel # Of Decontaminated: | Not reported |
| Responding Agency Personel # Of Injuries: | Not reported |
| Responding Agency Personel # Of Fatalities: | Not reported |
| Others Number Of Decontaminated: | Not reported |
| Others Number Of Injuries: | Not reported |
| Others Number Of Fatalities: | Not reported |
| Vehicle Make/year: | Not reported |
| Vehicle License Number: | Not reported |
| Vehicle State: | Not reported |
| Vehicle Id Number: | Not reported |
| CA DOT PUC/ICC Number: | Not reported |
| Company Name: | Not reported |
| Reporting Officer Name/ID: | Not reported |
| Report Date: | Not reported |
| Facility Telephone: | Not reported |
| Waterway Involved: | Not reported |
| Waterway: | la river |
| Spill Site: | Not reported |
| Cleanup By: | Unknown |
| Containment: | Not reported |
| What Happened: | Not reported |
| Type: | Not reported |
| Measure: | Not reported |
| Other: | Not reported |
| Date/Time: | Not reported |
| Year: | 2006 |
| Agency: | City of Los Angeles Sanitation |
| Incident Date: | 11/17/2006 12:00:00 AM |
| Admin Agency: | Glendale Fire Department |
| Amount: | Not reported |
| Contained: | Unknown |
| Site Type: | Waterways |
| E Date: | Not reported |
| Substance: | Diesel |

**(Continued)** **S109040777**

| | |
|---|---|
| Gallons: | 0.000000 |
| Unknown: | 0 |
| Substance #2: | Not reported |
| Substance #3: | Not reported |
| Evacuations: | 0 |
| Number of Injuries: | 0 |
| Number of Fatalities: | 0 |
| #1 Pipeline: | Not reported |
| #2 Pipeline: | Not reported |
| #3 Pipeline: | Not reported |
| #1 Vessel >= 300 Tons: | Not reported |
| #2 Vessel >= 300 Tons: | Not reported |
| #3 Vessel >= 300 Tons: | Not reported |
| Evacs: | Not reported |
| Injuries: | Not reported |
| Fatals: | Not reported |
| Comments: | Not reported |
| Description: | A fork-lift fell into the river. There was 10-15 gallons of diesel in fuel tank. |

---

**A5 Target Property** | **GLENDALE CITY,PUBLIC SERVICE-GRAYSON PWR** | **US AIRS** | **1006824344**
**800 AIR WAY** | **N/A**
**GLENDALE, CA 91201**

**Site 5 of 15 in cluster A**

**Actual: 468 ft.**

US AIRS (AFS):

| | |
|---|---|
| Envid: | 1006824344 |
| Region Code: | 09 |
| County Code: | CA037 |
| Programmatic ID: | AIR CASCA00006037CJ472 |
| Facility Registry ID: | 110013829330 |
| D and B Number: | Not reported |
| Facility Site Name: | GLENDALE CITY,PUBLIC SERVICE-GRAYSON PWR |
| Primary SIC Code: | 4923 |
| NAICS Code: | 221112 |
| Default Air Classification Code: | MAJ |
| Facility Type of Ownership Code: | CTG |
| Air CMS Category Code: | TVM |
| HPV Status: | Not reported |

US AIRS (AFS):

| | |
|---|---|
| Region Code: | 09 |
| Programmatic ID: | AIR CASCA00006037CJ472 |
| Facility Registry ID: | 110013829330 |
| Air Operating Status Code: | OPR |
| Default Air Classification Code: | MAJ |
| Air Program: | State Implementation Plan for National Primary and Secondary Ambient Air Quality Standards |
| Activity Date: | Not reported |
| Activity Status Date: | 2006-02-14 00:00:00 |
| Activity Group: | Case File |
| Activity Type: | Case File |
| Activity Status: | Resolved |

| | |
|---|---|
| Region Code: | 09 |
| Programmatic ID: | AIR CASCA00006037CJ472 |
| Facility Registry ID: | 110013829330 |
| Air Operating Status Code: | OPR |

**GLENDALE CITY,PUBLIC SERVICE-GRAYSON PWR (Continued)** **1006824344**

Default Air Classification Code: MAJ
Air Program: State Implementation Plan for National Primary and Secondary Ambient Air Quality Standards
Activity Date: Not reported
Activity Status Date: 2009-11-03 00:00:00
Activity Group: Case File
Activity Type: Case File
Activity Status: Resolved

Region Code: 09
Programmatic ID: AIR CASCA00006037CJ472
Facility Registry ID: 110013829330
Air Operating Status Code: OPR
Default Air Classification Code: MAJ
Air Program: State Implementation Plan for National Primary and Secondary Ambient Air Quality Standards
Activity Date: 2015-02-27 00:00:00
Activity Status Date: 2015-10-13 14:53:29
Activity Group: Compliance Monitoring
Activity Type: Inspection/Evaluation
Activity Status: Active

Region Code: 09
Programmatic ID: AIR CASCA00006037CJ472
Facility Registry ID: 110013829330
Air Operating Status Code: OPR
Default Air Classification Code: MAJ
Air Program: State Implementation Plan for National Primary and Secondary Ambient Air Quality Standards
Activity Date: 2015-09-01 00:00:00
Activity Status Date: 2015-10-13 14:52:27
Activity Group: Compliance Monitoring
Activity Type: Inspection/Evaluation
Activity Status: Active

Region Code: 09
Programmatic ID: AIR CASCA00006037CJ472
Facility Registry ID: 110013829330
Air Operating Status Code: OPR
Default Air Classification Code: MAJ
Air Program: State Implementation Plan for National Primary and Secondary Ambient Air Quality Standards
Activity Date: 2015-09-01 00:00:00
Activity Status Date: 2015-10-13 14:54:26
Activity Group: Compliance Monitoring
Activity Type: Inspection/Evaluation
Activity Status: Active

Region Code: 09
Programmatic ID: AIR CASCA00006037CJ472
Facility Registry ID: 110013829330
Air Operating Status Code: OPR
Default Air Classification Code: MAJ
Air Program: State Implementation Plan for National Primary and Secondary Ambient Air Quality Standards
Activity Date: 2003-09-29 00:00:00
Activity Status Date: Not reported
Activity Group: Compliance Monitoring
Activity Type: Inspection/Evaluation
Activity Status: Not reported

Region Code: 09

**GLENDALE CITY,PUBLIC SERVICE-GRAYSON PWR (Continued)** **1006824344**

Programmatic ID: AIR CASCA00006037CJ472
Facility Registry ID: 110013829330
Air Operating Status Code: OPR
Default Air Classification Code: MAJ
Air Program: State Implementation Plan for National Primary and Secondary Ambient Air Quality Standards
Activity Date: 2003-12-31 00:00:00
Activity Status Date: Not reported
Activity Group: Compliance Monitoring
Activity Type: Inspection/Evaluation
Activity Status: Not reported

Region Code: 09
Programmatic ID: AIR CASCA00006037CJ472
Facility Registry ID: 110013829330
Air Operating Status Code: OPR
Default Air Classification Code: MAJ
Air Program: State Implementation Plan for National Primary and Secondary Ambient Air Quality Standards
Activity Date: 2004-04-14 00:00:00
Activity Status Date: Not reported
Activity Group: Compliance Monitoring
Activity Type: Inspection/Evaluation
Activity Status: Not reported

Region Code: 09
Programmatic ID: AIR CASCA00006037CJ472
Facility Registry ID: 110013829330
Air Operating Status Code: OPR
Default Air Classification Code: MAJ
Air Program: State Implementation Plan for National Primary and Secondary Ambient Air Quality Standards
Activity Date: 2004-09-29 00:00:00
Activity Status Date: Not reported
Activity Group: Compliance Monitoring
Activity Type: Inspection/Evaluation
Activity Status: Not reported

Region Code: 09
Programmatic ID: AIR CASCA00006037CJ472
Facility Registry ID: 110013829330
Air Operating Status Code: OPR
Default Air Classification Code: MAJ
Air Program: State Implementation Plan for National Primary and Secondary Ambient Air Quality Standards
Activity Date: 2005-04-03 00:00:00
Activity Status Date: Not reported
Activity Group: Compliance Monitoring
Activity Type: Inspection/Evaluation
Activity Status: Not reported

Region Code: 09
Programmatic ID: AIR CASCA00006037CJ472
Facility Registry ID: 110013829330
Air Operating Status Code: OPR
Default Air Classification Code: MAJ
Air Program: State Implementation Plan for National Primary and Secondary Ambient Air Quality Standards
Activity Date: 2005-11-18 00:00:00
Activity Status Date: Not reported
Activity Group: Compliance Monitoring
Activity Type: Inspection/Evaluation

**GLENDALE CITY,PUBLIC SERVICE-GRAYSON PWR (Continued)** **1006824344**

Activity Status: Not reported

Region Code: 09
Programmatic ID: AIR CASCA00006037CJ472
Facility Registry ID: 110013829330
Air Operating Status Code: OPR
Default Air Classification Code: MAJ
Air Program: State Implementation Plan for National Primary and Secondary Ambient Air Quality Standards
Activity Date: 2006-03-28 00:00:00
Activity Status Date: Not reported
Activity Group: Compliance Monitoring
Activity Type: Inspection/Evaluation
Activity Status: Not reported

Region Code: 09
Programmatic ID: AIR CASCA00006037CJ472
Facility Registry ID: 110013829330
Air Operating Status Code: OPR
Default Air Classification Code: MAJ
Air Program: State Implementation Plan for National Primary and Secondary Ambient Air Quality Standards
Activity Date: 2006-03-29 00:00:00
Activity Status Date: Not reported
Activity Group: Compliance Monitoring
Activity Type: Inspection/Evaluation
Activity Status: Not reported

Region Code: 09
Programmatic ID: AIR CASCA00006037CJ472
Facility Registry ID: 110013829330
Air Operating Status Code: OPR
Default Air Classification Code: MAJ
Air Program: State Implementation Plan for National Primary and Secondary Ambient Air Quality Standards
Activity Date: 2011-01-25 00:00:00
Activity Status Date: Not reported
Activity Group: Compliance Monitoring
Activity Type: Inspection/Evaluation
Activity Status: Not reported

Region Code: 09
Programmatic ID: AIR CASCA00006037CJ472
Facility Registry ID: 110013829330
Air Operating Status Code: OPR
Default Air Classification Code: MAJ
Air Program: State Implementation Plan for National Primary and Secondary Ambient Air Quality Standards
Activity Date: 2011-05-16 00:00:00
Activity Status Date: Not reported
Activity Group: Compliance Monitoring
Activity Type: Inspection/Evaluation
Activity Status: Not reported

Region Code: 09
Programmatic ID: AIR CASCA00006037CJ472
Facility Registry ID: 110013829330
Air Operating Status Code: OPR
Default Air Classification Code: MAJ
Air Program: State Implementation Plan for National Primary and Secondary Ambient Air Quality Standards
Activity Date: 2011-05-25 00:00:00

**GLENDALE CITY,PUBLIC SERVICE-GRAYSON PWR (Continued)** **1006824344**

| | |
|---|---|
| Activity Status Date: | Not reported |
| Activity Group: | Compliance Monitoring |
| Activity Type: | Inspection/Evaluation |
| Activity Status: | Not reported |

| | |
|---|---|
| Region Code: | 09 |
| Programmatic ID: | AIR CASCA00006037CJ472 |
| Facility Registry ID: | 110013829330 |
| Air Operating Status Code: | OPR |
| Default Air Classification Code: | MAJ |
| Air Program: | State Implementation Plan for National Primary and Secondary Ambient Air Quality Standards |
| Activity Date: | 2011-09-29 00:00:00 |
| Activity Status Date: | Not reported |
| Activity Group: | Compliance Monitoring |
| Activity Type: | Inspection/Evaluation |
| Activity Status: | Not reported |

| | |
|---|---|
| Region Code: | 09 |
| Programmatic ID: | AIR CASCA00006037CJ472 |
| Facility Registry ID: | 110013829330 |
| Air Operating Status Code: | OPR |
| Default Air Classification Code: | MAJ |
| Air Program: | State Implementation Plan for National Primary and Secondary Ambient Air Quality Standards |
| Activity Date: | 2011-09-30 00:00:00 |
| Activity Status Date: | Not reported |
| Activity Group: | Compliance Monitoring |
| Activity Type: | Inspection/Evaluation |
| Activity Status: | Not reported |

| | |
|---|---|
| Region Code: | 09 |
| Programmatic ID: | AIR CASCA00006037CJ472 |
| Facility Registry ID: | 110013829330 |
| Air Operating Status Code: | OPR |
| Default Air Classification Code: | MAJ |
| Air Program: | State Implementation Plan for National Primary and Secondary Ambient Air Quality Standards |
| Activity Date: | 2012-01-30 00:00:00 |
| Activity Status Date: | Not reported |
| Activity Group: | Compliance Monitoring |
| Activity Type: | Inspection/Evaluation |
| Activity Status: | Not reported |

| | |
|---|---|
| Region Code: | 09 |
| Programmatic ID: | AIR CASCA00006037CJ472 |
| Facility Registry ID: | 110013829330 |
| Air Operating Status Code: | OPR |
| Default Air Classification Code: | MAJ |
| Air Program: | State Implementation Plan for National Primary and Secondary Ambient Air Quality Standards |
| Activity Date: | 2012-06-11 00:00:00 |
| Activity Status Date: | Not reported |
| Activity Group: | Compliance Monitoring |
| Activity Type: | Inspection/Evaluation |
| Activity Status: | Not reported |

| | |
|---|---|
| Region Code: | 09 |
| Programmatic ID: | AIR CASCA00006037CJ472 |
| Facility Registry ID: | 110013829330 |
| Air Operating Status Code: | OPR |

**GLENDALE CITY,PUBLIC SERVICE-GRAYSON PWR (Continued)** **1006824344**

| | |
|---|---|
| Default Air Classification Code: | MAJ |
| Air Program: | State Implementation Plan for National Primary and Secondary Ambient Air Quality Standards |
| Activity Date: | 2012-06-30 00:00:00 |
| Activity Status Date: | Not reported |
| Activity Group: | Compliance Monitoring |
| Activity Type: | Inspection/Evaluation |
| Activity Status: | Not reported |

| | |
|---|---|
| Region Code: | 09 |
| Programmatic ID: | AIR CASCA00006037CJ472 |
| Facility Registry ID: | 110013829330 |
| Air Operating Status Code: | OPR |
| Default Air Classification Code: | MAJ |
| Air Program: | State Implementation Plan for National Primary and Secondary Ambient Air Quality Standards |
| Activity Date: | 2012-08-15 00:00:00 |
| Activity Status Date: | Not reported |
| Activity Group: | Compliance Monitoring |
| Activity Type: | Inspection/Evaluation |
| Activity Status: | Not reported |

| | |
|---|---|
| Region Code: | 09 |
| Programmatic ID: | AIR CASCA00006037CJ472 |
| Facility Registry ID: | 110013829330 |
| Air Operating Status Code: | OPR |
| Default Air Classification Code: | MAJ |
| Air Program: | State Implementation Plan for National Primary and Secondary Ambient Air Quality Standards |
| Activity Date: | 2012-09-25 00:00:00 |
| Activity Status Date: | Not reported |
| Activity Group: | Compliance Monitoring |
| Activity Type: | Inspection/Evaluation |
| Activity Status: | Not reported |

| | |
|---|---|
| Region Code: | 09 |
| Programmatic ID: | AIR CASCA00006037CJ472 |
| Facility Registry ID: | 110013829330 |
| Air Operating Status Code: | OPR |
| Default Air Classification Code: | MAJ |
| Air Program: | State Implementation Plan for National Primary and Secondary Ambient Air Quality Standards |
| Activity Date: | 2012-09-26 00:00:00 |
| Activity Status Date: | Not reported |
| Activity Group: | Compliance Monitoring |
| Activity Type: | Inspection/Evaluation |
| Activity Status: | Not reported |

| | |
|---|---|
| Region Code: | 09 |
| Programmatic ID: | AIR CASCA00006037CJ472 |
| Facility Registry ID: | 110013829330 |
| Air Operating Status Code: | OPR |
| Default Air Classification Code: | MAJ |
| Air Program: | State Implementation Plan for National Primary and Secondary Ambient Air Quality Standards |
| Activity Date: | 2012-11-26 00:00:00 |
| Activity Status Date: | Not reported |
| Activity Group: | Compliance Monitoring |
| Activity Type: | Inspection/Evaluation |
| Activity Status: | Not reported |

| | |
|---|---|
| Region Code: | 09 |

**GLENDALE CITY,PUBLIC SERVICE-GRAYSON PWR (Continued)** **1006824344**

| | |
|---|---|
| Programmatic ID: | AIR CASCA00006037CJ472 |
| Facility Registry ID: | 110013829330 |
| Air Operating Status Code: | OPR |
| Default Air Classification Code: | MAJ |
| Air Program: | State Implementation Plan for National Primary and Secondary Ambient Air Quality Standards |
| Activity Date: | 2013-01-17 00:00:00 |
| Activity Status Date: | Not reported |
| Activity Group: | Compliance Monitoring |
| Activity Type: | Inspection/Evaluation |
| Activity Status: | Not reported |

| | |
|---|---|
| Region Code: | 09 |
| Programmatic ID: | AIR CASCA00006037CJ472 |
| Facility Registry ID: | 110013829330 |
| Air Operating Status Code: | OPR |
| Default Air Classification Code: | MAJ |
| Air Program: | State Implementation Plan for National Primary and Secondary Ambient Air Quality Standards |
| Activity Date: | 2013-08-16 00:00:00 |
| Activity Status Date: | Not reported |
| Activity Group: | Compliance Monitoring |
| Activity Type: | Inspection/Evaluation |
| Activity Status: | Not reported |

| | |
|---|---|
| Region Code: | 09 |
| Programmatic ID: | AIR CASCA00006037CJ472 |
| Facility Registry ID: | 110013829330 |
| Air Operating Status Code: | OPR |
| Default Air Classification Code: | MAJ |
| Air Program: | State Implementation Plan for National Primary and Secondary Ambient Air Quality Standards |
| Activity Date: | 2013-08-19 00:00:00 |
| Activity Status Date: | Not reported |
| Activity Group: | Compliance Monitoring |
| Activity Type: | Inspection/Evaluation |
| Activity Status: | Not reported |

| | |
|---|---|
| Region Code: | 09 |
| Programmatic ID: | AIR CASCA00006037CJ472 |
| Facility Registry ID: | 110013829330 |
| Air Operating Status Code: | OPR |
| Default Air Classification Code: | MAJ |
| Air Program: | State Implementation Plan for National Primary and Secondary Ambient Air Quality Standards |
| Activity Date: | 2013-08-20 00:00:00 |
| Activity Status Date: | Not reported |
| Activity Group: | Compliance Monitoring |
| Activity Type: | Inspection/Evaluation |
| Activity Status: | Not reported |

| | |
|---|---|
| Region Code: | 09 |
| Programmatic ID: | AIR CASCA00006037CJ472 |
| Facility Registry ID: | 110013829330 |
| Air Operating Status Code: | OPR |
| Default Air Classification Code: | MAJ |
| Air Program: | State Implementation Plan for National Primary and Secondary Ambient Air Quality Standards |
| Activity Date: | 2014-01-22 00:00:00 |
| Activity Status Date: | Not reported |
| Activity Group: | Compliance Monitoring |
| Activity Type: | Inspection/Evaluation |

**GLENDALE CITY,PUBLIC SERVICE-GRAYSON PWR (Continued)** **1006824344**

Activity Status: Not reported

Region Code: 09
Programmatic ID: AIR CASCA00006037CJ472
Facility Registry ID: 110013829330
Air Operating Status Code: OPR
Default Air Classification Code: MAJ
Air Program: State Implementation Plan for National Primary and Secondary Ambient Air Quality Standards
Activity Date: 2014-02-19 00:00:00
Activity Status Date: Not reported
Activity Group: Compliance Monitoring
Activity Type: Inspection/Evaluation
Activity Status: Not reported

Region Code: 09
Programmatic ID: AIR CASCA00006037CJ472
Facility Registry ID: 110013829330
Air Operating Status Code: OPR
Default Air Classification Code: MAJ
Air Program: State Implementation Plan for National Primary and Secondary Ambient Air Quality Standards
Activity Date: 2014-06-04 00:00:00
Activity Status Date: Not reported
Activity Group: Compliance Monitoring
Activity Type: Inspection/Evaluation
Activity Status: Not reported

Region Code: 09
Programmatic ID: AIR CASCA00006037CJ472
Facility Registry ID: 110013829330
Air Operating Status Code: OPR
Default Air Classification Code: MAJ
Air Program: State Implementation Plan for National Primary and Secondary Ambient Air Quality Standards
Activity Date: 2014-06-25 00:00:00
Activity Status Date: Not reported
Activity Group: Compliance Monitoring
Activity Type: Inspection/Evaluation
Activity Status: Not reported

Region Code: 09
Programmatic ID: AIR CASCA00006037CJ472
Facility Registry ID: 110013829330
Air Operating Status Code: OPR
Default Air Classification Code: MAJ
Air Program: State Implementation Plan for National Primary and Secondary Ambient Air Quality Standards
Activity Date: 2005-06-07 00:00:00
Activity Status Date: 2005-06-07 00:00:00
Activity Group: Enforcement Action
Activity Type: Administrative - Formal
Activity Status: Final Order Issued

Region Code: 09
Programmatic ID: AIR CASCA00006037CJ472
Facility Registry ID: 110013829330
Air Operating Status Code: OPR
Default Air Classification Code: MAJ
Air Program: State Implementation Plan for National Primary and Secondary Ambient Air Quality Standards
Activity Date: 2009-01-09 00:00:00

**GLENDALE CITY,PUBLIC SERVICE-GRAYSON PWR (Continued)** **1006824344**

| | |
|---|---|
| Activity Status Date: | 2009-01-09 00:00:00 |
| Activity Group: | Enforcement Action |
| Activity Type: | Administrative - Formal |
| Activity Status: | Final Order Issued |

| | |
|---|---|
| Region Code: | 09 |
| Programmatic ID: | AIR CASCA00006037CJ472 |
| Facility Registry ID: | 110013829330 |
| Air Operating Status Code: | OPR |
| Default Air Classification Code: | MAJ |
| Air Program: | State Implementation Plan for National Primary and Secondary Ambient Air Quality Standards |
| Activity Date: | 2005-03-10 00:00:00 |
| Activity Status Date: | 2005-03-10 00:00:00 |
| Activity Group: | Enforcement Action |
| Activity Type: | Administrative - Informal |
| Activity Status: | Achieved |

| | |
|---|---|
| Region Code: | 09 |
| Programmatic ID: | AIR CASCA00006037CJ472 |
| Facility Registry ID: | 110013829330 |
| Air Operating Status Code: | OPR |
| Default Air Classification Code: | MAJ |
| Air Program: | State Implementation Plan for National Primary and Secondary Ambient Air Quality Standards |
| Activity Date: | 2008-07-22 00:00:00 |
| Activity Status Date: | 2008-07-22 00:00:00 |
| Activity Group: | Enforcement Action |
| Activity Type: | Administrative - Informal |
| Activity Status: | Achieved |

| | |
|---|---|
| Region Code: | 09 |
| Programmatic ID: | AIR CASCA00006037CJ472 |
| Facility Registry ID: | 110013829330 |
| Air Operating Status Code: | OPR |
| Default Air Classification Code: | MAJ |
| Air Program: | Title V Permits |
| Activity Date: | Not reported |
| Activity Status Date: | 2006-02-14 00:00:00 |
| Activity Group: | Case File |
| Activity Type: | Case File |
| Activity Status: | Resolved |

| | |
|---|---|
| Region Code: | 09 |
| Programmatic ID: | AIR CASCA00006037CJ472 |
| Facility Registry ID: | 110013829330 |
| Air Operating Status Code: | OPR |
| Default Air Classification Code: | MAJ |
| Air Program: | Title V Permits |
| Activity Date: | Not reported |
| Activity Status Date: | 2009-11-03 00:00:00 |
| Activity Group: | Case File |
| Activity Type: | Case File |
| Activity Status: | Resolved |

| | |
|---|---|
| Region Code: | 09 |
| Programmatic ID: | AIR CASCA00006037CJ472 |
| Facility Registry ID: | 110013829330 |
| Air Operating Status Code: | OPR |

**GLENDALE CITY,PUBLIC SERVICE-GRAYSON PWR (Continued)** **1006824344**

| | |
|---|---|
| Default Air Classification Code: | MAJ |
| Air Program: | Title V Permits |
| Activity Date: | 2015-02-27 00:00:00 |
| Activity Status Date: | 2015-10-13 14:53:29 |
| Activity Group: | Compliance Monitoring |
| Activity Type: | Inspection/Evaluation |
| Activity Status: | Active |

| | |
|---|---|
| Region Code: | 09 |
| Programmatic ID: | AIR CASCA00006037CJ472 |
| Facility Registry ID: | 110013829330 |
| Air Operating Status Code: | OPR |
| Default Air Classification Code: | MAJ |
| Air Program: | Title V Permits |
| Activity Date: | 2015-09-01 00:00:00 |
| Activity Status Date: | 2015-10-13 14:52:27 |
| Activity Group: | Compliance Monitoring |
| Activity Type: | Inspection/Evaluation |
| Activity Status: | Active |

| | |
|---|---|
| Region Code: | 09 |
| Programmatic ID: | AIR CASCA00006037CJ472 |
| Facility Registry ID: | 110013829330 |
| Air Operating Status Code: | OPR |
| Default Air Classification Code: | MAJ |
| Air Program: | Title V Permits |
| Activity Date: | 2015-09-01 00:00:00 |
| Activity Status Date: | 2015-10-13 14:54:26 |
| Activity Group: | Compliance Monitoring |
| Activity Type: | Inspection/Evaluation |
| Activity Status: | Active |

| | |
|---|---|
| Region Code: | 09 |
| Programmatic ID: | AIR CASCA00006037CJ472 |
| Facility Registry ID: | 110013829330 |
| Air Operating Status Code: | OPR |
| Default Air Classification Code: | MAJ |
| Air Program: | Title V Permits |
| Activity Date: | 1998-11-03 00:00:00 |
| Activity Status Date: | Not reported |
| Activity Group: | Compliance Monitoring |
| Activity Type: | Inspection/Evaluation |
| Activity Status: | Not reported |

| | |
|---|---|
| Region Code: | 09 |
| Programmatic ID: | AIR CASCA00006037CJ472 |
| Facility Registry ID: | 110013829330 |
| Air Operating Status Code: | OPR |
| Default Air Classification Code: | MAJ |
| Air Program: | Title V Permits |
| Activity Date: | 2000-03-01 00:00:00 |
| Activity Status Date: | Not reported |
| Activity Group: | Compliance Monitoring |
| Activity Type: | Inspection/Evaluation |
| Activity Status: | Not reported |

| | |
|---|---|
| Region Code: | 09 |

**GLENDALE CITY,PUBLIC SERVICE-GRAYSON PWR (Continued)** **1006824344**

Programmatic ID: AIR CASCA00006037CJ472
Facility Registry ID: 110013829330
Air Operating Status Code: OPR
Default Air Classification Code: MAJ
Air Program: Title V Permits
Activity Date: 2000-08-23 00:00:00
Activity Status Date: Not reported
Activity Group: Compliance Monitoring
Activity Type: Inspection/Evaluation
Activity Status: Not reported

Region Code: 09
Programmatic ID: AIR CASCA00006037CJ472
Facility Registry ID: 110013829330
Air Operating Status Code: OPR
Default Air Classification Code: MAJ
Air Program: Title V Permits
Activity Date: 2001-03-01 00:00:00
Activity Status Date: Not reported
Activity Group: Compliance Monitoring
Activity Type: Inspection/Evaluation
Activity Status: Not reported

Region Code: 09
Programmatic ID: AIR CASCA00006037CJ472
Facility Registry ID: 110013829330
Air Operating Status Code: OPR
Default Air Classification Code: MAJ
Air Program: Title V Permits
Activity Date: 2001-06-14 00:00:00
Activity Status Date: Not reported
Activity Group: Compliance Monitoring
Activity Type: Inspection/Evaluation
Activity Status: Not reported

Region Code: 09
Programmatic ID: AIR CASCA00006037CJ472
Facility Registry ID: 110013829330
Air Operating Status Code: OPR
Default Air Classification Code: MAJ
Air Program: Title V Permits
Activity Date: 2001-10-30 00:00:00
Activity Status Date: Not reported
Activity Group: Compliance Monitoring
Activity Type: Inspection/Evaluation
Activity Status: Not reported

Region Code: 09
Programmatic ID: AIR CASCA00006037CJ472
Facility Registry ID: 110013829330
Air Operating Status Code: OPR
Default Air Classification Code: MAJ
Air Program: Title V Permits
Activity Date: 2002-02-28 00:00:00
Activity Status Date: Not reported
Activity Group: Compliance Monitoring
Activity Type: Inspection/Evaluation

**GLENDALE CITY,PUBLIC SERVICE-GRAYSON PWR (Continued)** **1006824344**

Activity Status: Not reported

Region Code: 09
Programmatic ID: AIR CASCA00006037CJ472
Facility Registry ID: 110013829330
Air Operating Status Code: OPR
Default Air Classification Code: MAJ
Air Program: Title V Permits
Activity Date: 2002-03-01 00:00:00
Activity Status Date: Not reported
Activity Group: Compliance Monitoring
Activity Type: Inspection/Evaluation
Activity Status: Not reported

Region Code: 09
Programmatic ID: AIR CASCA00006037CJ472
Facility Registry ID: 110013829330
Air Operating Status Code: OPR
Default Air Classification Code: MAJ
Air Program: Title V Permits
Activity Date: 2003-02-27 00:00:00
Activity Status Date: Not reported
Activity Group: Compliance Monitoring
Activity Type: Inspection/Evaluation
Activity Status: Not reported

Region Code: 09
Programmatic ID: AIR CASCA00006037CJ472
Facility Registry ID: 110013829330
Air Operating Status Code: OPR
Default Air Classification Code: MAJ
Air Program: Title V Permits
Activity Date: 2003-03-01 00:00:00
Activity Status Date: Not reported
Activity Group: Compliance Monitoring
Activity Type: Inspection/Evaluation
Activity Status: Not reported

Region Code: 09
Programmatic ID: AIR CASCA00006037CJ472
Facility Registry ID: 110013829330
Air Operating Status Code: OPR
Default Air Classification Code: MAJ
Air Program: Title V Permits
Activity Date: 2003-09-16 00:00:00
Activity Status Date: Not reported
Activity Group: Compliance Monitoring
Activity Type: Inspection/Evaluation
Activity Status: Not reported

Region Code: 09
Programmatic ID: AIR CASCA00006037CJ472
Facility Registry ID: 110013829330
Air Operating Status Code: OPR
Default Air Classification Code: MAJ
Air Program: Title V Permits
Activity Date: 2003-09-18 00:00:00

**GLENDALE CITY,PUBLIC SERVICE-GRAYSON PWR (Continued)** **1006824344**

| | |
|---|---|
| Activity Status Date: | Not reported |
| Activity Group: | Compliance Monitoring |
| Activity Type: | Inspection/Evaluation |
| Activity Status: | Not reported |

| | |
|---|---|
| Region Code: | 09 |
| Programmatic ID: | AIR CASCA00006037CJ472 |
| Facility Registry ID: | 110013829330 |
| Air Operating Status Code: | OPR |
| Default Air Classification Code: | MAJ |
| Air Program: | Title V Permits |
| Activity Date: | 2003-09-29 00:00:00 |
| Activity Status Date: | Not reported |
| Activity Group: | Compliance Monitoring |
| Activity Type: | Inspection/Evaluation |
| Activity Status: | Not reported |

| | |
|---|---|
| Region Code: | 09 |
| Programmatic ID: | AIR CASCA00006037CJ472 |
| Facility Registry ID: | 110013829330 |
| Air Operating Status Code: | OPR |
| Default Air Classification Code: | MAJ |
| Air Program: | Title V Permits |
| Activity Date: | 2003-12-31 00:00:00 |
| Activity Status Date: | Not reported |
| Activity Group: | Compliance Monitoring |
| Activity Type: | Inspection/Evaluation |
| Activity Status: | Not reported |

| | |
|---|---|
| Region Code: | 09 |
| Programmatic ID: | AIR CASCA00006037CJ472 |
| Facility Registry ID: | 110013829330 |
| Air Operating Status Code: | OPR |
| Default Air Classification Code: | MAJ |
| Air Program: | Title V Permits |
| Activity Date: | 2004-03-01 00:00:00 |
| Activity Status Date: | Not reported |
| Activity Group: | Compliance Monitoring |
| Activity Type: | Inspection/Evaluation |
| Activity Status: | Not reported |

| | |
|---|---|
| Region Code: | 09 |
| Programmatic ID: | AIR CASCA00006037CJ472 |
| Facility Registry ID: | 110013829330 |
| Air Operating Status Code: | OPR |
| Default Air Classification Code: | MAJ |
| Air Program: | Title V Permits |
| Activity Date: | 2004-04-14 00:00:00 |
| Activity Status Date: | Not reported |
| Activity Group: | Compliance Monitoring |
| Activity Type: | Inspection/Evaluation |
| Activity Status: | Not reported |

| | |
|---|---|
| Region Code: | 09 |
| Programmatic ID: | AIR CASCA00006037CJ472 |
| Facility Registry ID: | 110013829330 |
| Air Operating Status Code: | OPR |

**GLENDALE CITY,PUBLIC SERVICE-GRAYSON PWR (Continued)** **1006824344**

Default Air Classification Code: MAJ
Air Program: Title V Permits
Activity Date: 2004-09-29 00:00:00
Activity Status Date: Not reported
Activity Group: Compliance Monitoring
Activity Type: Inspection/Evaluation
Activity Status: Not reported

Region Code: 09
Programmatic ID: AIR CASCA00006037CJ472
Facility Registry ID: 110013829330
Air Operating Status Code: OPR
Default Air Classification Code: MAJ
Air Program: Title V Permits
Activity Date: 2005-03-01 00:00:00
Activity Status Date: Not reported
Activity Group: Compliance Monitoring
Activity Type: Inspection/Evaluation
Activity Status: Not reported

Region Code: 09
Programmatic ID: AIR CASCA00006037CJ472
Facility Registry ID: 110013829330
Air Operating Status Code: OPR
Default Air Classification Code: MAJ
Air Program: Title V Permits
Activity Date: 2005-04-03 00:00:00
Activity Status Date: Not reported
Activity Group: Compliance Monitoring
Activity Type: Inspection/Evaluation
Activity Status: Not reported

Region Code: 09
Programmatic ID: AIR CASCA00006037CJ472
Facility Registry ID: 110013829330
Air Operating Status Code: OPR
Default Air Classification Code: MAJ
Air Program: Title V Permits
Activity Date: 2005-11-18 00:00:00
Activity Status Date: Not reported
Activity Group: Compliance Monitoring
Activity Type: Inspection/Evaluation
Activity Status: Not reported

Region Code: 09
Programmatic ID: AIR CASCA00006037CJ472
Facility Registry ID: 110013829330
Air Operating Status Code: OPR
Default Air Classification Code: MAJ
Air Program: Title V Permits
Activity Date: 2006-03-28 00:00:00
Activity Status Date: Not reported
Activity Group: Compliance Monitoring
Activity Type: Inspection/Evaluation
Activity Status: Not reported

Region Code: 09

**GLENDALE CITY,PUBLIC SERVICE-GRAYSON PWR (Continued)** **1006824344**

Programmatic ID: AIR CASCA00006037CJ472
Facility Registry ID: 110013829330
Air Operating Status Code: OPR
Default Air Classification Code: MAJ
Air Program: Title V Permits
Activity Date: 2006-03-29 00:00:00
Activity Status Date: Not reported
Activity Group: Compliance Monitoring
Activity Type: Inspection/Evaluation
Activity Status: Not reported

Region Code: 09
Programmatic ID: AIR CASCA00006037CJ472
Facility Registry ID: 110013829330
Air Operating Status Code: OPR
Default Air Classification Code: MAJ
Air Program: Title V Permits
Activity Date: 2011-01-25 00:00:00
Activity Status Date: Not reported
Activity Group: Compliance Monitoring
Activity Type: Inspection/Evaluation
Activity Status: Not reported

Region Code: 09
Programmatic ID: AIR CASCA00006037CJ472
Facility Registry ID: 110013829330
Air Operating Status Code: OPR
Default Air Classification Code: MAJ
Air Program: Title V Permits
Activity Date: 2011-05-16 00:00:00
Activity Status Date: Not reported
Activity Group: Compliance Monitoring
Activity Type: Inspection/Evaluation
Activity Status: Not reported

Region Code: 09
Programmatic ID: AIR CASCA00006037CJ472
Facility Registry ID: 110013829330
Air Operating Status Code: OPR
Default Air Classification Code: MAJ
Air Program: Title V Permits
Activity Date: 2011-05-25 00:00:00
Activity Status Date: Not reported
Activity Group: Compliance Monitoring
Activity Type: Inspection/Evaluation
Activity Status: Not reported

Region Code: 09
Programmatic ID: AIR CASCA00006037CJ472
Facility Registry ID: 110013829330
Air Operating Status Code: OPR
Default Air Classification Code: MAJ
Air Program: Title V Permits
Activity Date: 2011-09-29 00:00:00
Activity Status Date: Not reported
Activity Group: Compliance Monitoring
Activity Type: Inspection/Evaluation

**GLENDALE CITY,PUBLIC SERVICE-GRAYSON PWR (Continued)** **1006824344**

| | |
|---|---|
| Activity Status: | Not reported |

| | |
|---|---|
| Region Code: | 09 |
| Programmatic ID: | AIR CASCA00006037CJ472 |
| Facility Registry ID: | 110013829330 |
| Air Operating Status Code: | OPR |
| Default Air Classification Code: | MAJ |
| Air Program: | Title V Permits |
| Activity Date: | 2011-09-30 00:00:00 |
| Activity Status Date: | Not reported |
| Activity Group: | Compliance Monitoring |
| Activity Type: | Inspection/Evaluation |
| Activity Status: | Not reported |

| | |
|---|---|
| Region Code: | 09 |
| Programmatic ID: | AIR CASCA00006037CJ472 |
| Facility Registry ID: | 110013829330 |
| Air Operating Status Code: | OPR |
| Default Air Classification Code: | MAJ |
| Air Program: | Title V Permits |
| Activity Date: | 2012-01-30 00:00:00 |
| Activity Status Date: | Not reported |
| Activity Group: | Compliance Monitoring |
| Activity Type: | Inspection/Evaluation |
| Activity Status: | Not reported |

| | |
|---|---|
| Region Code: | 09 |
| Programmatic ID: | AIR CASCA00006037CJ472 |
| Facility Registry ID: | 110013829330 |
| Air Operating Status Code: | OPR |
| Default Air Classification Code: | MAJ |
| Air Program: | Title V Permits |
| Activity Date: | 2012-06-11 00:00:00 |
| Activity Status Date: | Not reported |
| Activity Group: | Compliance Monitoring |
| Activity Type: | Inspection/Evaluation |
| Activity Status: | Not reported |

| | |
|---|---|
| Region Code: | 09 |
| Programmatic ID: | AIR CASCA00006037CJ472 |
| Facility Registry ID: | 110013829330 |
| Air Operating Status Code: | OPR |
| Default Air Classification Code: | MAJ |
| Air Program: | Title V Permits |
| Activity Date: | 2012-06-30 00:00:00 |
| Activity Status Date: | Not reported |
| Activity Group: | Compliance Monitoring |
| Activity Type: | Inspection/Evaluation |
| Activity Status: | Not reported |

| | |
|---|---|
| Region Code: | 09 |
| Programmatic ID: | AIR CASCA00006037CJ472 |
| Facility Registry ID: | 110013829330 |
| Air Operating Status Code: | OPR |
| Default Air Classification Code: | MAJ |
| Air Program: | Title V Permits |
| Activity Date: | 2012-08-15 00:00:00 |

**GLENDALE CITY,PUBLIC SERVICE-GRAYSON PWR (Continued)** **1006824344**

| | |
|---|---|
| Activity Status Date: | Not reported |
| Activity Group: | Compliance Monitoring |
| Activity Type: | Inspection/Evaluation |
| Activity Status: | Not reported |

| | |
|---|---|
| Region Code: | 09 |
| Programmatic ID: | AIR CASCA00006037CJ472 |
| Facility Registry ID: | 110013829330 |
| Air Operating Status Code: | OPR |
| Default Air Classification Code: | MAJ |
| Air Program: | Title V Permits |
| Activity Date: | 2012-09-25 00:00:00 |
| Activity Status Date: | Not reported |
| Activity Group: | Compliance Monitoring |
| Activity Type: | Inspection/Evaluation |
| Activity Status: | Not reported |

| | |
|---|---|
| Region Code: | 09 |
| Programmatic ID: | AIR CASCA00006037CJ472 |
| Facility Registry ID: | 110013829330 |
| Air Operating Status Code: | OPR |
| Default Air Classification Code: | MAJ |
| Air Program: | Title V Permits |
| Activity Date: | 2012-09-26 00:00:00 |
| Activity Status Date: | Not reported |
| Activity Group: | Compliance Monitoring |
| Activity Type: | Inspection/Evaluation |
| Activity Status: | Not reported |

| | |
|---|---|
| Region Code: | 09 |
| Programmatic ID: | AIR CASCA00006037CJ472 |
| Facility Registry ID: | 110013829330 |
| Air Operating Status Code: | OPR |
| Default Air Classification Code: | MAJ |
| Air Program: | Title V Permits |
| Activity Date: | 2012-11-26 00:00:00 |
| Activity Status Date: | Not reported |
| Activity Group: | Compliance Monitoring |
| Activity Type: | Inspection/Evaluation |
| Activity Status: | Not reported |

| | |
|---|---|
| Region Code: | 09 |
| Programmatic ID: | AIR CASCA00006037CJ472 |
| Facility Registry ID: | 110013829330 |
| Air Operating Status Code: | OPR |
| Default Air Classification Code: | MAJ |
| Air Program: | Title V Permits |
| Activity Date: | 2013-01-17 00:00:00 |
| Activity Status Date: | Not reported |
| Activity Group: | Compliance Monitoring |
| Activity Type: | Inspection/Evaluation |
| Activity Status: | Not reported |

| | |
|---|---|
| Region Code: | 09 |
| Programmatic ID: | AIR CASCA00006037CJ472 |
| Facility Registry ID: | 110013829330 |
| Air Operating Status Code: | OPR |

**GLENDALE CITY,PUBLIC SERVICE-GRAYSON PWR (Continued)** **1006824344**

Default Air Classification Code: MAJ
Air Program: Title V Permits
Activity Date: 2013-08-16 00:00:00
Activity Status Date: Not reported
Activity Group: Compliance Monitoring
Activity Type: Inspection/Evaluation
Activity Status: Not reported

Region Code: 09
Programmatic ID: AIR CASCA00006037CJ472
Facility Registry ID: 110013829330
Air Operating Status Code: OPR
Default Air Classification Code: MAJ
Air Program: Title V Permits
Activity Date: 2013-08-19 00:00:00
Activity Status Date: Not reported
Activity Group: Compliance Monitoring
Activity Type: Inspection/Evaluation
Activity Status: Not reported

Region Code: 09
Programmatic ID: AIR CASCA00006037CJ472
Facility Registry ID: 110013829330
Air Operating Status Code: OPR
Default Air Classification Code: MAJ
Air Program: Title V Permits
Activity Date: 2013-08-20 00:00:00
Activity Status Date: Not reported
Activity Group: Compliance Monitoring
Activity Type: Inspection/Evaluation
Activity Status: Not reported

Region Code: 09
Programmatic ID: AIR CASCA00006037CJ472
Facility Registry ID: 110013829330
Air Operating Status Code: OPR
Default Air Classification Code: MAJ
Air Program: Title V Permits
Activity Date: 2014-01-22 00:00:00
Activity Status Date: Not reported
Activity Group: Compliance Monitoring
Activity Type: Inspection/Evaluation
Activity Status: Not reported

Region Code: 09
Programmatic ID: AIR CASCA00006037CJ472
Facility Registry ID: 110013829330
Air Operating Status Code: OPR
Default Air Classification Code: MAJ
Air Program: Title V Permits
Activity Date: 2014-02-19 00:00:00
Activity Status Date: Not reported
Activity Group: Compliance Monitoring
Activity Type: Inspection/Evaluation
Activity Status: Not reported

Region Code: 09

**GLENDALE CITY,PUBLIC SERVICE-GRAYSON PWR (Continued)** **1006824344**

| | |
|---|---|
| Programmatic ID: | AIR CASCA00006037CJ472 |
| Facility Registry ID: | 110013829330 |
| Air Operating Status Code: | OPR |
| Default Air Classification Code: | MAJ |
| Air Program: | Title V Permits |
| Activity Date: | 2014-06-04 00:00:00 |
| Activity Status Date: | Not reported |
| Activity Group: | Compliance Monitoring |
| Activity Type: | Inspection/Evaluation |
| Activity Status: | Not reported |

| | |
|---|---|
| Region Code: | 09 |
| Programmatic ID: | AIR CASCA00006037CJ472 |
| Facility Registry ID: | 110013829330 |
| Air Operating Status Code: | OPR |
| Default Air Classification Code: | MAJ |
| Air Program: | Title V Permits |
| Activity Date: | 2014-06-25 00:00:00 |
| Activity Status Date: | Not reported |
| Activity Group: | Compliance Monitoring |
| Activity Type: | Inspection/Evaluation |
| Activity Status: | Not reported |

| | |
|---|---|
| Region Code: | 09 |
| Programmatic ID: | AIR CASCA00006037CJ472 |
| Facility Registry ID: | 110013829330 |
| Air Operating Status Code: | OPR |
| Default Air Classification Code: | MAJ |
| Air Program: | Title V Permits |
| Activity Date: | 2005-06-07 00:00:00 |
| Activity Status Date: | 2005-06-07 00:00:00 |
| Activity Group: | Enforcement Action |
| Activity Type: | Administrative - Formal |
| Activity Status: | Final Order Issued |

| | |
|---|---|
| Region Code: | 09 |
| Programmatic ID: | AIR CASCA00006037CJ472 |
| Facility Registry ID: | 110013829330 |
| Air Operating Status Code: | OPR |
| Default Air Classification Code: | MAJ |
| Air Program: | Title V Permits |
| Activity Date: | 2009-01-09 00:00:00 |
| Activity Status Date: | 2009-01-09 00:00:00 |
| Activity Group: | Enforcement Action |
| Activity Type: | Administrative - Formal |
| Activity Status: | Final Order Issued |

| | |
|---|---|
| Region Code: | 09 |
| Programmatic ID: | AIR CASCA00006037CJ472 |
| Facility Registry ID: | 110013829330 |
| Air Operating Status Code: | OPR |
| Default Air Classification Code: | MAJ |
| Air Program: | Title V Permits |
| Activity Date: | 2005-03-10 00:00:00 |
| Activity Status Date: | 2005-03-10 00:00:00 |
| Activity Group: | Enforcement Action |
| Activity Type: | Administrative - Informal |

**GLENDALE CITY,PUBLIC SERVICE-GRAYSON PWR (Continued)** **1006824344**

| | |
|---|---|
| Activity Status: | Achieved |
| | |
| Region Code: | 09 |
| Programmatic ID: | AIR CASCA00006037CJ472 |
| Facility Registry ID: | 110013829330 |
| Air Operating Status Code: | OPR |
| Default Air Classification Code: | MAJ |
| Air Program: | Title V Permits |
| Activity Date: | 2008-07-22 00:00:00 |
| Activity Status Date: | 2008-07-22 00:00:00 |
| Activity Group: | Enforcement Action |
| Activity Type: | Administrative - Informal |
| Activity Status: | Achieved |

---

**A6 Target Property** **LOS ANGELES COUNTY SANITATION DISTRICTS** **HAZNET** **S113020991**
**800 AIR WAY** **N/A**
**GLENDALE, CA 91201**

**Site 6 of 15 in cluster A**

**Actual: 468 ft.**

HAZNET:

| | |
|---|---|
| envid: | S113020991 |
| Year: | 1996 |
| GEPAID: | CAH777000751 |
| Contact: | LA CTY SAN DISTS |
| Telephone: | 0000000000 |
| Mailing Name: | Not reported |
| Mailing Address: | 1955 WORKMAN MILL ROAD |
| Mailing City,St,Zip: | WHITTIER, CA 906010000 |
| Gen County: | Not reported |
| TSD EPA ID: | AZD049318009 |
| TSD County: | Not reported |
| Waste Category: | Household waste |
| Disposal Method: | Recycler |
| Tons: | 2.7450 |
| Cat Decode: | Household waste |
| Method Decode: | Recycler |
| Facility County: | Los Angeles |
| | |
| envid: | S113020991 |
| Year: | 1996 |
| GEPAID: | CAH777000751 |
| Contact: | LA CTY SAN DISTS |
| Telephone: | 0000000000 |
| Mailing Name: | Not reported |
| Mailing Address: | 1955 WORKMAN MILL ROAD |
| Mailing City,St,Zip: | WHITTIER, CA 906010000 |
| Gen County: | Not reported |
| TSD EPA ID: | AZD049318009 |
| TSD County: | Not reported |
| Waste Category: | Household waste |
| Disposal Method: | Transfer Station |
| Tons: | 36.8585 |
| Cat Decode: | Household waste |
| Method Decode: | Transfer Station |
| Facility County: | Los Angeles |

**LOS ANGELES COUNTY SANITATION DISTRICTS (Continued)** **S113020991**

envid: S113020991
Year: 1996
GEPAID: CAH777000751
Contact: LA CTY SAN DISTS
Telephone: 0000000000
Mailing Name: Not reported
Mailing Address: 1955 WORKMAN MILL ROAD
Mailing City,St,Zip: WHITTIER, CA 906010000
Gen County: Not reported
TSD EPA ID: CAD000633164
TSD County: Not reported
Waste Category: Household waste
Disposal Method: Disposal, Land Fill
Tons: 8.4280
Cat Decode: Household waste
Method Decode: Disposal, Land Fill
Facility County: Los Angeles

envid: S113020991
Year: 1996
GEPAID: CAH777000751
Contact: LA CTY SAN DISTS
Telephone: 0000000000
Mailing Name: Not reported
Mailing Address: 1955 WORKMAN MILL ROAD
Mailing City,St,Zip: WHITTIER, CA 906010000
Gen County: Not reported
TSD EPA ID: CAD981696420
TSD County: Not reported
Waste Category: Waste oil and mixed oil
Disposal Method: Transfer Station
Tons: 5.8380
Cat Decode: Waste oil and mixed oil
Method Decode: Transfer Station
Facility County: Los Angeles

envid: S113020991
Year: 1996
GEPAID: CAH777000751
Contact: LA CTY SAN DISTS
Telephone: 0000000000
Mailing Name: Not reported
Mailing Address: 1955 WORKMAN MILL ROAD
Mailing City,St,Zip: WHITTIER, CA 906010000
Gen County: Not reported
TSD EPA ID: CAD981696420
TSD County: Not reported
Waste Category: Aqueous solution with total organic residues less than 10 percent
Disposal Method: Not reported
Tons: 1.2510
Cat Decode: Aqueous solution with total organic residues less than 10 percent
Method Decode: Not reported
Facility County: Los Angeles

Click this hyperlink while viewing on your computer to access
1 additional CA_HAZNET: record(s) in the EDR Site Report.

**A7 Target Property** | **GRAYSON POWER PLANT**
**800 AIRWAY**
**GLENDALE, CA 91201**

**Site 7 of 15 in cluster A**

**SLIC**
**SWEEPS UST**
**CA FID UST**
**EMI**
**WIP**

**S101618308**
**N/A**

**Actual: 468 ft.**

SLIC:

| | |
|---|---|
| Region: | STATE |
| **Facility Status:** | **Completed - Case Closed** |
| Status Date: | 06/29/2011 |
| Global Id: | SL603798950 |
| Lead Agency: | LOS ANGELES RWQCB (REGION 4) |
| Lead Agency Case Number: | Not reported |
| Latitude: | 34.1709199705969 |
| Longitude: | -118.249984295354 |
| Case Type: | Cleanup Program Site |
| Case Worker: | GJH |
| Local Agency: | Not reported |
| RB Case Number: | 109.0756 |
| File Location: | Not reported |
| Potential Media Affected: | Aquifer used for drinking water supply |
| Potential Contaminants of Concern: | Not reported |
| Site History: | NFR Issued on June 29, 2011. |

Click here to access the California GeoTracker records for this facility:

SWEEPS UST:

| | |
|---|---|
| Status: | Active |
| Comp Number: | 1 |
| Number: | 4 |
| Board Of Equalization: | Not reported |
| Referral Date: | 10-12-92 |
| Action Date: | 10-12-92 |
| Created Date: | 10-12-92 |
| Owner Tank Id: | Not reported |
| SWRCB Tank Id: | 19-070-000001-000003 |
| Tank Status: | A |
| Capacity: | 32500 |
| Active Date: | 10-12-92 |
| Tank Use: | M.V. FUEL |
| STG: | P |
| Content: | DIESEL |
| Number Of Tanks: | 4 |

| | |
|---|---|
| Status: | Active |
| Comp Number: | 1 |
| Number: | 4 |
| Board Of Equalization: | Not reported |
| Referral Date: | 10-12-92 |
| Action Date: | 10-12-92 |
| Created Date: | 10-12-92 |
| Owner Tank Id: | 4 |
| SWRCB Tank Id: | 19-070-000001-000008 |
| Tank Status: | A |
| Capacity: | 32500 |
| Active Date: | 10-12-92 |
| Tank Use: | M.V. FUEL |
| STG: | P |
| Content: | DIESEL |

**GRAYSON POWER PLANT (Continued)** **S101618308**

Number Of Tanks: Not reported

Status: Active
Comp Number: 1
Number: 4
Board Of Equalization: Not reported
Referral Date: 10-12-92
Action Date: 10-12-92
Created Date: 10-12-92
Owner Tank Id: 4
SWRCB Tank Id: 19-070-000001-011620
Tank Status: A
Capacity: 32500
Active Date: 10-12-92
Tank Use: M.V. FUEL
STG: P
Content: DIESEL
Number Of Tanks: Not reported

Status: Active
Comp Number: 1
Number: 4
Board Of Equalization: Not reported
Referral Date: 10-12-92
Action Date: 10-12-92
Created Date: 10-12-92
Owner Tank Id: 4
SWRCB Tank Id: 19-070-000001-059369
Tank Status: A
Capacity: 32000
Active Date: 10-12-92
Tank Use: M.V. FUEL
STG: P
Content: DIESEL
Number Of Tanks: Not reported

CA FID UST:
Facility ID: 19010743
Regulated By: UTNKA
Regulated ID: Not reported
Cortese Code: Not reported
SIC Code: Not reported
Facility Phone: 8185482088
Mail To: Not reported
Mailing Address: 800 AIRWAY
Mailing Address 2: Not reported
Mailing City,St,Zip: GLENDALE 91201
Contact: Not reported
Contact Phone: Not reported
DUNs Number: Not reported
NPDES Number: Not reported
EPA ID: Not reported
Comments: Not reported
Status: Active

EMI:

**GRAYSON POWER PLANT (Continued)** **S101618308**

| | |
|---|---|
| Year: | 1987 |
| County Code: | 19 |
| Air Basin: | SC |
| Facility ID: | 24957 |
| Air District Name: | SC |
| SIC Code: | 4911 |
| Air District Name: | SOUTH COAST AQMD |
| Community Health Air Pollution Info System: | Not reported |
| Consolidated Emission Reporting Rule: | Not reported |
| Total Organic Hydrocarbon Gases Tons/Yr: | 18 |
| Reactive Organic Gases Tons/Yr: | 5 |
| Carbon Monoxide Emissions Tons/Yr: | 35 |
| NOX - Oxides of Nitrogen Tons/Yr: | 323 |
| SOX - Oxides of Sulphur Tons/Yr: | 3 |
| Particulate Matter Tons/Yr: | 6 |
| Part. Matter 10 Micrometers and Smllr Tons/Yr: | 5 |

| | |
|---|---|
| Year: | 1990 |
| County Code: | 19 |
| Air Basin: | SC |
| Facility ID: | 24957 |
| Air District Name: | SC |
| SIC Code: | 4911 |
| Air District Name: | SOUTH COAST AQMD |
| Community Health Air Pollution Info System: | Not reported |
| Consolidated Emission Reporting Rule: | Not reported |
| Total Organic Hydrocarbon Gases Tons/Yr: | 22 |
| Reactive Organic Gases Tons/Yr: | 7 |
| Carbon Monoxide Emissions Tons/Yr: | 46 |
| NOX - Oxides of Nitrogen Tons/Yr: | 310 |
| SOX - Oxides of Sulphur Tons/Yr: | 5 |
| Particulate Matter Tons/Yr: | 6 |
| Part. Matter 10 Micrometers and Smllr Tons/Yr: | 6 |

WIP:

| | |
|---|---|
| Region: | 4 |
| File Number: | 109.0756 |
| **File Status:** | **Backlog** |
| Staff: | UNIDENTIFIED |
| Facility Suite: | Not reported |

---

**A8 Target Property** | **GLENDALE CITY, PUBLIC SERVICE**
**800 AIR WAY**
**GLENDALE, CA 91201** | **SWEEPS UST** **S101618312**
**CA FID UST** **N/A**
**EMI**

**Site 8 of 15 in cluster A**

**Actual: 468 ft.**

SWEEPS UST:

| | |
|---|---|
| Status: | Active |
| Comp Number: | 10433 |
| Number: | 4 |
| Board Of Equalization: | Not reported |
| Referral Date: | 12-09-92 |
| Action Date: | 12-09-92 |
| Created Date: | 06-30-89 |
| Owner Tank Id: | Not reported |
| SWRCB Tank Id: | Not reported |

**GLENDALE CITY, PUBLIC SERVICE (Continued)** **S101618312**

| | |
|---|---|
| Tank Status: | Not reported |
| Capacity: | Not reported |
| Active Date: | Not reported |
| Tank Use: | Not reported |
| STG: | Not reported |
| Content: | Not reported |
| Number Of Tanks: | Not reported |

| | |
|---|---|
| Status: | Active |
| Comp Number: | 11620 |
| Number: | 4 |
| Board Of Equalization: | Not reported |
| Referral Date: | 11-02-92 |
| Action Date: | 11-02-92 |
| Created Date: | 11-02-92 |
| Owner Tank Id: | Not reported |
| SWRCB Tank Id: | 19-070-011620-000001 |
| Tank Status: | A |
| Capacity: | 1000 |
| Active Date: | 11-02-92 |
| Tank Use: | OIL |
| STG: | W |
| Content: | WASTE OIL |
| Number Of Tanks: | 4 |

| | |
|---|---|
| Status: | Active |
| Comp Number: | 11620 |
| Number: | 4 |
| Board Of Equalization: | Not reported |
| Referral Date: | 11-02-92 |
| Action Date: | 11-02-92 |
| Created Date: | 11-02-92 |
| Owner Tank Id: | Not reported |
| SWRCB Tank Id: | 19-070-011620-000002 |
| Tank Status: | A |
| Capacity: | 10000 |
| Active Date: | 11-02-92 |
| Tank Use: | M.V. FUEL |
| STG: | P |
| Content: | REG UNLEADED |
| Number Of Tanks: | Not reported |

| | |
|---|---|
| Status: | Active |
| Comp Number: | 11620 |
| Number: | 4 |
| Board Of Equalization: | Not reported |
| Referral Date: | 11-02-92 |
| Action Date: | 11-02-92 |
| Created Date: | 11-02-92 |
| Owner Tank Id: | Not reported |
| SWRCB Tank Id: | 19-070-011620-000003 |
| Tank Status: | A |
| Capacity: | 10000 |
| Active Date: | 11-02-92 |
| Tank Use: | M.V. FUEL |
| STG: | P |
| Content: | REG UNLEADED |

**GLENDALE CITY, PUBLIC SERVICE (Continued)** **S101618312**

Number Of Tanks: Not reported

Status: Active
Comp Number: 11620
Number: 4
Board Of Equalization: Not reported
Referral Date: 11-02-92
Action Date: 11-02-92
Created Date: 11-02-92
Owner Tank Id: Not reported
SWRCB Tank Id: 19-070-011620-000004
Tank Status: A
Capacity: 10000
Active Date: 11-02-92
Tank Use: PETROLEUM
STG: P
Content: REGULAR UNLE
Number Of Tanks: Not reported

Status: Not reported
Comp Number: 10433
Number: Not reported
Board Of Equalization: Not reported
Referral Date: Not reported
Action Date: Not reported
Created Date: Not reported
Owner Tank Id: Not reported
SWRCB Tank Id: 19-070-010433-000009
Tank Status: Not reported
Capacity: 40000
Active Date: Not reported
Tank Use: PETROLEUM
STG: PRODUCT
Content: NO 2 FUEL
Number Of Tanks: 10

Status: Not reported
Comp Number: 10433
Number: Not reported
Board Of Equalization: Not reported
Referral Date: Not reported
Action Date: Not reported
Created Date: Not reported
Owner Tank Id: Not reported
SWRCB Tank Id: 19-070-010433-000010
Tank Status: Not reported
Capacity: 40000
Active Date: Not reported
Tank Use: PETROLEUM
STG: PRODUCT
Content: NO 2 FUEL
Number Of Tanks: Not reported

Status: Not reported
Comp Number: 10433
Number: Not reported
Board Of Equalization: Not reported

**GLENDALE CITY, PUBLIC SERVICE (Continued)** **S101618312**

| | |
|---|---|
| Referral Date: | Not reported |
| Action Date: | Not reported |
| Created Date: | Not reported |
| Owner Tank Id: | Not reported |
| SWRCB Tank Id: | 19-070-010433-000011 |
| Tank Status: | Not reported |
| Capacity: | 40000 |
| Active Date: | Not reported |
| Tank Use: | PETROLEUM |
| STG: | PRODUCT |
| Content: | NO 2 FUEL |
| Number Of Tanks: | Not reported |

| | |
|---|---|
| Status: | Not reported |
| Comp Number: | 10433 |
| Number: | Not reported |
| Board Of Equalization: | Not reported |
| Referral Date: | Not reported |
| Action Date: | Not reported |
| Created Date: | Not reported |
| Owner Tank Id: | Not reported |
| SWRCB Tank Id: | 19-070-010433-000012 |
| Tank Status: | Not reported |
| Capacity: | 40000 |
| Active Date: | Not reported |
| Tank Use: | UNKNOWN |
| STG: | PRODUCT |
| Content: | Not reported |
| Number Of Tanks: | Not reported |

| | |
|---|---|
| Status: | Not reported |
| Comp Number: | 10433 |
| Number: | Not reported |
| Board Of Equalization: | Not reported |
| Referral Date: | Not reported |
| Action Date: | Not reported |
| Created Date: | Not reported |
| Owner Tank Id: | Not reported |
| SWRCB Tank Id: | 19-070-010433-000013 |
| Tank Status: | Not reported |
| Capacity: | 32500 |
| Active Date: | Not reported |
| Tank Use: | UNKNOWN |
| STG: | PRODUCT |
| Content: | Not reported |
| Number Of Tanks: | Not reported |

| | |
|---|---|
| Status: | Not reported |
| Comp Number: | 10433 |
| Number: | Not reported |
| Board Of Equalization: | Not reported |
| Referral Date: | Not reported |
| Action Date: | Not reported |
| Created Date: | Not reported |
| Owner Tank Id: | Not reported |
| SWRCB Tank Id: | 19-070-010433-000014 |
| Tank Status: | Not reported |

**GLENDALE CITY, PUBLIC SERVICE (Continued)** **S101618312**

| | |
|---|---|
| Capacity: | 40000 |
| Active Date: | Not reported |
| Tank Use: | UNKNOWN |
| STG: | PRODUCT |
| Content: | Not reported |
| Number Of Tanks: | Not reported |

| | |
|---|---|
| Status: | Not reported |
| Comp Number: | 10433 |
| Number: | Not reported |
| Board Of Equalization: | Not reported |
| Referral Date: | Not reported |
| Action Date: | Not reported |
| Created Date: | Not reported |
| Owner Tank Id: | Not reported |
| SWRCB Tank Id: | 19-070-010433-000015 |
| Tank Status: | Not reported |
| Capacity: | 40000 |
| Active Date: | Not reported |
| Tank Use: | UNKNOWN |
| STG: | PRODUCT |
| Content: | Not reported |
| Number Of Tanks: | Not reported |

| | |
|---|---|
| Status: | Not reported |
| Comp Number: | 10433 |
| Number: | Not reported |
| Board Of Equalization: | Not reported |
| Referral Date: | Not reported |
| Action Date: | Not reported |
| Created Date: | Not reported |
| Owner Tank Id: | Not reported |
| SWRCB Tank Id: | 19-070-010433-000016 |
| Tank Status: | Not reported |
| Capacity: | 40000 |
| Active Date: | Not reported |
| Tank Use: | UNKNOWN |
| STG: | PRODUCT |
| Content: | Not reported |
| Number Of Tanks: | Not reported |

| | |
|---|---|
| Status: | Not reported |
| Comp Number: | 10433 |
| Number: | Not reported |
| Board Of Equalization: | Not reported |
| Referral Date: | Not reported |
| Action Date: | Not reported |
| Created Date: | Not reported |
| Owner Tank Id: | Not reported |
| SWRCB Tank Id: | 19-070-010433-000017 |
| Tank Status: | Not reported |
| Capacity: | 1000 |
| Active Date: | Not reported |
| Tank Use: | UNKNOWN |
| STG: | PRODUCT |
| Content: | Not reported |
| Number Of Tanks: | Not reported |

**GLENDALE CITY, PUBLIC SERVICE (Continued)** **S101618312**

| | |
|---|---|
| Status: | Not reported |
| Comp Number: | 10433 |
| Number: | Not reported |
| Board Of Equalization: | Not reported |
| Referral Date: | Not reported |
| Action Date: | Not reported |
| Created Date: | Not reported |
| Owner Tank Id: | Not reported |
| SWRCB Tank Id: | 19-070-010433-000018 |
| Tank Status: | Not reported |
| Capacity: | 1000 |
| Active Date: | Not reported |
| Tank Use: | OIL |
| STG: | PRODUCT |
| Content: | DIESEL |
| Number Of Tanks: | Not reported |

CA FID UST:

| | |
|---|---|
| Facility ID: | 19001552 |
| Regulated By: | UTNKA |
| Regulated ID: | 024957 |
| Cortese Code: | Not reported |
| SIC Code: | Not reported |
| Facility Phone: | 8189562088 |
| Mail To: | Not reported |
| Mailing Address: | 119 N GLENDALE AVE |
| Mailing Address 2: | Not reported |
| Mailing City,St,Zip: | GLENDALE 91201 |
| Contact: | Not reported |
| Contact Phone: | Not reported |
| DUNs Number: | Not reported |
| NPDES Number: | Not reported |
| EPA ID: | Not reported |
| Comments: | Not reported |
| Status: | Active |

| | |
|---|---|
| Facility ID: | 19001552 |
| Regulated By: | UTNKA |
| Regulated ID: | Not reported |
| Cortese Code: | Not reported |
| SIC Code: | Not reported |
| Facility Phone: | 8185484878 |
| Mail To: | Not reported |
| Mailing Address: | Not reported |
| Mailing Address 2: | Not reported |
| Mailing City,St,Zip: | GLENDALE 91201 |
| Contact: | Not reported |
| Contact Phone: | Not reported |
| DUNs Number: | Not reported |
| NPDES Number: | Not reported |
| EPA ID: | Not reported |
| Comments: | Not reported |
| Status: | Active |

EMI:

| | |
|---|---|
| Year: | 1993 |

**GLENDALE CITY, PUBLIC SERVICE (Continued)** **S101618312**

| | |
|---|---|
| County Code: | 19 |
| Air Basin: | SC |
| Facility ID: | 24957 |
| Air District Name: | SC |
| SIC Code: | 4911 |
| Air District Name: | SOUTH COAST AQMD |
| Community Health Air Pollution Info System: | Not reported |
| Consolidated Emission Reporting Rule: | Not reported |
| Total Organic Hydrocarbon Gases Tons/Yr: | 2 |
| Reactive Organic Gases Tons/Yr: | 2 |
| Carbon Monoxide Emissions Tons/Yr: | 7 |
| NOX - Oxides of Nitrogen Tons/Yr: | 0 |
| SOX - Oxides of Sulphur Tons/Yr: | 0 |
| Particulate Matter Tons/Yr: | 0 |
| Part. Matter 10 Micrometers and Smllr Tons/Yr: | 0 |

| | |
|---|---|
| Year: | 1995 |
| County Code: | 19 |
| Air Basin: | SC |
| Facility ID: | 24957 |
| Air District Name: | SC |
| SIC Code: | 4911 |
| Air District Name: | SOUTH COAST AQMD |
| Community Health Air Pollution Info System: | Not reported |
| Consolidated Emission Reporting Rule: | Not reported |
| Total Organic Hydrocarbon Gases Tons/Yr: | 2 |
| Reactive Organic Gases Tons/Yr: | 2 |
| Carbon Monoxide Emissions Tons/Yr: | 7 |
| NOX - Oxides of Nitrogen Tons/Yr: | 0 |
| SOX - Oxides of Sulphur Tons/Yr: | 0 |
| Particulate Matter Tons/Yr: | 0 |
| Part. Matter 10 Micrometers and Smllr Tons/Yr: | 0 |

| | |
|---|---|
| Year: | 1997 |
| County Code: | 19 |
| Air Basin: | SC |
| Facility ID: | 800327 |
| Air District Name: | SC |
| SIC Code: | 4931 |
| Air District Name: | SOUTH COAST AQMD |
| Community Health Air Pollution Info System: | Not reported |
| Consolidated Emission Reporting Rule: | Not reported |
| Total Organic Hydrocarbon Gases Tons/Yr: | 68 |
| Reactive Organic Gases Tons/Yr: | 19 |
| Carbon Monoxide Emissions Tons/Yr: | 33 |
| NOX - Oxides of Nitrogen Tons/Yr: | 80 |
| SOX - Oxides of Sulphur Tons/Yr: | 2 |
| Particulate Matter Tons/Yr: | 4 |
| Part. Matter 10 Micrometers and Smllr Tons/Yr: | 4 |

| | |
|---|---|
| Year: | 1998 |
| County Code: | 19 |
| Air Basin: | SC |
| Facility ID: | 800327 |
| Air District Name: | SC |
| SIC Code: | 4931 |
| Air District Name: | SOUTH COAST AQMD |

**GLENDALE CITY, PUBLIC SERVICE (Continued)** **S101618312**

| | |
|---|---|
| Community Health Air Pollution Info System: | Not reported |
| Consolidated Emission Reporting Rule: | Not reported |
| Total Organic Hydrocarbon Gases Tons/Yr: | 79 |
| Reactive Organic Gases Tons/Yr: | 20 |
| Carbon Monoxide Emissions Tons/Yr: | 33 |
| NOX - Oxides of Nitrogen Tons/Yr: | 80 |
| SOX - Oxides of Sulphur Tons/Yr: | 2 |
| Particulate Matter Tons/Yr: | 4 |
| Part. Matter 10 Micrometers and Smllr Tons/Yr: | 4 |

| | |
|---|---|
| Year: | 1999 |
| County Code: | 19 |
| Air Basin: | SC |
| Facility ID: | 800327 |
| Air District Name: | SC |
| SIC Code: | 4931 |
| Air District Name: | SOUTH COAST AQMD |
| Community Health Air Pollution Info System: | Not reported |
| Consolidated Emission Reporting Rule: | Not reported |
| Total Organic Hydrocarbon Gases Tons/Yr: | 68 |
| Reactive Organic Gases Tons/Yr: | 19 |
| Carbon Monoxide Emissions Tons/Yr: | 33 |
| NOX - Oxides of Nitrogen Tons/Yr: | 80 |
| SOX - Oxides of Sulphur Tons/Yr: | 2 |
| Particulate Matter Tons/Yr: | 4 |
| Part. Matter 10 Micrometers and Smllr Tons/Yr: | 4 |

| | |
|---|---|
| Year: | 2000 |
| County Code: | 19 |
| Air Basin: | SC |
| Facility ID: | 800327 |
| Air District Name: | SC |
| SIC Code: | 4931 |
| Air District Name: | SOUTH COAST AQMD |
| Community Health Air Pollution Info System: | Not reported |
| Consolidated Emission Reporting Rule: | Not reported |
| Total Organic Hydrocarbon Gases Tons/Yr: | 68 |
| Reactive Organic Gases Tons/Yr: | 19 |
| Carbon Monoxide Emissions Tons/Yr: | 33 |
| NOX - Oxides of Nitrogen Tons/Yr: | 80 |
| SOX - Oxides of Sulphur Tons/Yr: | 2 |
| Particulate Matter Tons/Yr: | 4 |
| Part. Matter 10 Micrometers and Smllr Tons/Yr: | 4 |

| | |
|---|---|
| Year: | 2001 |
| County Code: | 19 |
| Air Basin: | SC |
| Facility ID: | 24957 |
| Air District Name: | SC |
| SIC Code: | 4923 |
| Air District Name: | SOUTH COAST AQMD |
| Community Health Air Pollution Info System: | Y |
| Consolidated Emission Reporting Rule: | B |
| Total Organic Hydrocarbon Gases Tons/Yr: | 454 |
| Reactive Organic Gases Tons/Yr: | 59 |
| Carbon Monoxide Emissions Tons/Yr: | 131 |
| NOX - Oxides of Nitrogen Tons/Yr: | 341 |

**GLENDALE CITY, PUBLIC SERVICE (Continued)** **S101618312**

| | |
|---|---|
| SOX - Oxides of Sulphur Tons/Yr: | 2 |
| Particulate Matter Tons/Yr: | 19 |
| Part. Matter 10 Micrometers and Smllr Tons/Yr: | 19 |

| | |
|---|---|
| Year: | 2009 |
| County Code: | 19 |
| Air Basin: | SC |
| Facility ID: | 800327 |
| Air District Name: | SC |
| SIC Code: | 4931 |
| Air District Name: | SOUTH COAST AQMD |
| Community Health Air Pollution Info System: | Not reported |
| Consolidated Emission Reporting Rule: | Not reported |
| Total Organic Hydrocarbon Gases Tons/Yr: | 60.924620318010099 |
| Reactive Organic Gases Tons/Yr: | 15.252775 |
| Carbon Monoxide Emissions Tons/Yr: | 36.960000000000001 |
| NOX - Oxides of Nitrogen Tons/Yr: | 33.490000000000002 |
| SOX - Oxides of Sulphur Tons/Yr: | 2.6105149999999999 |
| Particulate Matter Tons/Yr: | 16.337350000000001 |
| Part. Matter 10 Micrometers and Smllr Tons/Yr: | 15.8301509 |

| | |
|---|---|
| Year: | 2010 |
| County Code: | 19 |
| Air Basin: | SC |
| Facility ID: | 800327 |
| Air District Name: | SC |
| SIC Code: | 4931 |
| Air District Name: | SOUTH COAST AQMD |
| Community Health Air Pollution Info System: | Not reported |
| Consolidated Emission Reporting Rule: | Not reported |
| Total Organic Hydrocarbon Gases Tons/Yr: | 31.324636975151801 |
| Reactive Organic Gases Tons/Yr: | 10.816660000000001 |
| Carbon Monoxide Emissions Tons/Yr: | 60.495820000000002 |
| NOX - Oxides of Nitrogen Tons/Yr: | 39.032249999999998 |
| SOX - Oxides of Sulphur Tons/Yr: | 2.6040399999999999 |
| Particulate Matter Tons/Yr: | 37.346470193499997 |
| Part. Matter 10 Micrometers and Smllr Tons/Yr: | 31.1061760346795 |

| | |
|---|---|
| Year: | 2011 |
| County Code: | 19 |
| Air Basin: | SC |
| Facility ID: | 800327 |
| Air District Name: | SC |
| SIC Code: | 4931 |
| Air District Name: | SOUTH COAST AQMD |
| Community Health Air Pollution Info System: | Not reported |
| Consolidated Emission Reporting Rule: | Not reported |
| Total Organic Hydrocarbon Gases Tons/Yr: | 40.631776594 |
| Reactive Organic Gases Tons/Yr: | 11.3955 |
| Carbon Monoxide Emissions Tons/Yr: | 53.56235 |
| NOX - Oxides of Nitrogen Tons/Yr: | 35.82555 |
| SOX - Oxides of Sulphur Tons/Yr: | 2.71361 |
| Particulate Matter Tons/Yr: | 33.6644 |
| Part. Matter 10 Micrometers and Smllr Tons/Yr: | 28.64821677 |

**A9 Target Property** | **GRAYSON POWER PLANT**
**800 AIR WAY**
**GLENDALE, CA 91201** | **HIST UST** | **U001566843**
**N/A**

**Site 9 of 15 in cluster A**

**Actual: 468 ft.**

HIST UST:

| | |
|---|---|
| File Number: | 00027010 |
| URL: | http://geotracker.waterboards.ca.gov/ustpdfs/pdf/00027010.pdf |
| Region: | STATE |
| Facility ID: | 00000020660 |
| Facility Type: | Other |
| Other Type: | UTILITY |
| Contact Name: | J.J. MCELHINEY |
| Telephone: | 8189563980 |
| Owner Name: | CITY OF GLENDALE |
| Owner Address: | 613 EAST BROADWAY |
| Owner City,St,Zip: | GLENDALE, CA 91205 |
| Total Tanks: | 0016 |
| | |
| Tank Num: | 001 |
| Container Num: | 1 |
| Year Installed: | 1940 |
| Tank Capacity: | 00909000 |
| Tank Used for: | PRODUCT |
| Type of Fuel: | Not reported |
| Container Construction Thickness: | 12 |
| Leak Detection: | Stock Inventor |
| | |
| Tank Num: | 002 |
| Container Num: | 2 |
| Year Installed: | 1947 |
| Tank Capacity: | 00913500 |
| Tank Used for: | PRODUCT |
| Type of Fuel: | Not reported |
| Container Construction Thickness: | 12 |
| Leak Detection: | Stock Inventor |
| | |
| Tank Num: | 003 |
| Container Num: | 3 |
| Year Installed: | 1953 |
| Tank Capacity: | 00907500 |
| Tank Used for: | PRODUCT |
| Type of Fuel: | Not reported |
| Container Construction Thickness: | 12 |
| Leak Detection: | Stock Inventor |
| | |
| Tank Num: | 004 |
| Container Num: | 4 |
| Year Installed: | 1959 |
| Tank Capacity: | 00000000 |
| Tank Used for: | PRODUCT |
| Type of Fuel: | Not reported |
| Container Construction Thickness: | 12 |
| Leak Detection: | Stock Inventor |
| | |
| Tank Num: | 005 |
| Container Num: | 6A |
| Year Installed: | 1971 |

**GRAYSON POWER PLANT (Continued)** **U001566843**

| | |
|---|---|
| Tank Capacity: | 00040000 |
| Tank Used for: | PRODUCT |
| Type of Fuel: | DIESEL |
| Container Construction Thickness: | 1/4 |
| Leak Detection: | Stock Inventor |

| | |
|---|---|
| Tank Num: | 006 |
| Container Num: | 6B |
| Year Installed: | 1971 |
| Tank Capacity: | 00040000 |
| Tank Used for: | PRODUCT |
| Type of Fuel: | DIESEL |
| Container Construction Thickness: | 1/4 |
| Leak Detection: | Stock Inventor |

| | |
|---|---|
| Tank Num: | 007 |
| Container Num: | 6C |
| Year Installed: | 1971 |
| Tank Capacity: | 00040000 |
| Tank Used for: | PRODUCT |
| Type of Fuel: | DIESEL |
| Container Construction Thickness: | 1/4 |
| Leak Detection: | Stock Inventor |

| | |
|---|---|
| Tank Num: | 008 |
| Container Num: | 7A |
| Year Installed: | 1973 |
| Tank Capacity: | 00040000 |
| Tank Used for: | PRODUCT |
| Type of Fuel: | DIESEL |
| Container Construction Thickness: | 1/4 |
| Leak Detection: | Stock Inventor |

| | |
|---|---|
| Tank Num: | 009 |
| Container Num: | 7B |
| Year Installed: | 1973 |
| Tank Capacity: | 00040000 |
| Tank Used for: | PRODUCT |
| Type of Fuel: | DIESEL |
| Container Construction Thickness: | 1/4 |
| Leak Detection: | Not reported |

| | |
|---|---|
| Tank Num: | 010 |
| Container Num: | 7C |
| Year Installed: | 1973 |
| Tank Capacity: | 00040000 |
| Tank Used for: | PRODUCT |
| Type of Fuel: | DIESEL |
| Container Construction Thickness: | 1/4 |
| Leak Detection: | Stock Inventor |

| | |
|---|---|
| Tank Num: | 011 |
| Container Num: | 8A |
| Year Installed: | 1977 |
| Tank Capacity: | 00032500 |
| Tank Used for: | PRODUCT |
| Type of Fuel: | DIESEL |

**GRAYSON POWER PLANT (Continued)** **U001566843**

Container Construction Thickness: 1/4
Leak Detection: Stock Inventor

Tank Num: 012
Container Num: 8B
Year Installed: 1977
Tank Capacity: 00032500
Tank Used for: PRODUCT
Type of Fuel: DIESEL
Container Construction Thickness: 1/4
Leak Detection: Stock Inventor

Tank Num: 013
Container Num: 8C
Year Installed: 1977
Tank Capacity: 00032500
Tank Used for: PRODUCT
Type of Fuel: DIESEL
Container Construction Thickness: 1/4
Leak Detection: Stock Inventor

Tank Num: 014
Container Num: 8D
Year Installed: 1977
Tank Capacity: 00032500
Tank Used for: PRODUCT
Type of Fuel: DIESEL
Container Construction Thickness: 1/4
Leak Detection: Stock Inventor

Tank Num: 015
Container Num: 8E
Year Installed: 1977
Tank Capacity: 00032500
Tank Used for: PRODUCT
Type of Fuel: DIESEL
Container Construction Thickness: 1/4
Leak Detection: Stock Inventor

Tank Num: 016
Container Num: 9
Year Installed: 1977
Tank Capacity: 02590000
Tank Used for: PRODUCT
Type of Fuel: DIESEL
Container Construction Thickness: Not reported
Leak Detection: Stock Inventor

Click here for Geo Tracker PDF:

**A10 Target Property** | **GLENDALE CITY OF PUB SERV**
**800 AIRWAY ST**
**GLENDALE, CA 91201** | **HAZNET** | **S113002790**
**N/A**

**Site 10 of 15 in cluster A**

**Actual: 468 ft.**

HAZNET:

| | |
|---|---|
| envid: | S113002790 |
| Year: | 2014 |
| GEPAID: | CAD980735864 |
| Contact: | MIRIAM SYKES |
| Telephone: | 8185483807 |
| Mailing Name: | Not reported |
| Mailing Address: | 141 NORTH GLENDALE AVENUE, LEVEL 4 |
| Mailing City,St,Zip: | GLENDALE, CA 912060000 |
| Gen County: | Los Angeles |
| TSD EPA ID: | CAD009007626 |
| TSD County: | Los Angeles |
| Waste Category: | Asbestos containing waste |
| Disposal Method: | Landfill Or Surface Impoundment That Will Be Closed As Landfill( To Include On-Site Treatment And/Or Stabilization) |
| Tons: | 4.6 |
| Cat Decode: | Asbestos containing waste |
| Method Decode: | Landfill Or Surface Impoundment That Will Be Closed As Landfill( To Include On-Site Treatment And/Or Stabilization) |
| Facility County: | Los Angeles |

| | |
|---|---|
| envid: | S113002790 |
| Year: | 2014 |
| GEPAID: | CAD980735864 |
| Contact: | MIRIAM SYKES |
| Telephone: | 8185483807 |
| Mailing Name: | Not reported |
| Mailing Address: | 141 NORTH GLENDALE AVENUE, LEVEL 4 |
| Mailing City,St,Zip: | GLENDALE, CA 912060000 |
| Gen County: | Los Angeles |
| TSD EPA ID: | CAT080013352 |
| TSD County: | Los Angeles |
| Waste Category: | Waste oil and mixed oil |
| Disposal Method: | Other Recovery Of Reclamation For Reuse Including Acid Regeneration, Organics Recovery Ect |
| Tons: | 7.79 |
| Cat Decode: | Waste oil and mixed oil |
| Method Decode: | Other Recovery Of Reclamation For Reuse Including Acid Regeneration, Organics Recovery Ect |
| Facility County: | Los Angeles |

| | |
|---|---|
| envid: | S113002790 |
| Year: | 2014 |
| GEPAID: | CAD980735864 |
| Contact: | MIRIAM SYKES |
| Telephone: | 8185483807 |
| Mailing Name: | Not reported |
| Mailing Address: | 141 NORTH GLENDALE AVENUE, LEVEL 4 |
| Mailing City,St,Zip: | GLENDALE, CA 912060000 |
| Gen County: | Los Angeles |
| TSD EPA ID: | CAT080013352 |
| TSD County: | Los Angeles |
| Waste Category: | Unspecified aqueous solution |

**GLENDALE CITY OF PUB SERV (Continued)** **S113002790**

| | |
|---|---|
| Disposal Method: | Other Recovery Of Reclamation For Reuse Including Acid Regeneration, Organics Recovery Ect |
| Tons: | 0.378 |
| Cat Decode: | Unspecified aqueous solution |
| Method Decode: | Other Recovery Of Reclamation For Reuse Including Acid Regeneration, Organics Recovery Ect |
| Facility County: | Los Angeles |

| | |
|---|---|
| envid: | S113002790 |
| Year: | 2014 |
| GEPAID: | CAD980735864 |
| Contact: | MIRIAM SYKES |
| Telephone: | 8185483807 |
| Mailing Name: | Not reported |
| Mailing Address: | 141 NORTH GLENDALE AVENUE, LEVEL 4 |
| Mailing City,St,Zip: | GLENDALE, CA 912060000 |
| Gen County: | Los Angeles |
| TSD EPA ID: | CAD980675276 |
| TSD County: | Kern |
| Waste Category: | Off-specification, aged or surplus inorganics |
| Disposal Method: | Landfill Or Surface Impoundment That Will Be Closed As Landfill( To Include On-Site Treatment And/Or Stabilization) |
| Tons: | 3.375 |
| Cat Decode: | Off-specification, aged or surplus inorganics |
| Method Decode: | Landfill Or Surface Impoundment That Will Be Closed As Landfill( To Include On-Site Treatment And/Or Stabilization) |
| Facility County: | Los Angeles |

| | |
|---|---|
| envid: | S113002790 |
| Year: | 2014 |
| GEPAID: | CAD980735864 |
| Contact: | MIRIAM SYKES |
| Telephone: | 8185483807 |
| Mailing Name: | Not reported |
| Mailing Address: | 141 NORTH GLENDALE AVENUE, LEVEL 4 |
| Mailing City,St,Zip: | GLENDALE, CA 912060000 |
| Gen County: | Los Angeles |
| TSD EPA ID: | CAD097030993 |
| TSD County: | Los Angeles |
| Waste Category: | Other organic solids |
| Disposal Method: | Storage, Bulking, And/Or Transfer Off Site--No Treatment/Reovery (H010-H129) Or (H131-H135) |
| Tons: | 0.946 |
| Cat Decode: | Other organic solids |
| Method Decode: | Storage, Bulking, And/Or Transfer Off Site--No Treatment/Reovery (H010-H129) Or (H131-H135) |
| Facility County: | Los Angeles |

Click this hyperlink while viewing on your computer to access
1329 additional CA_HAZNET: record(s) in the EDR Site Report.

**A11 Target Property** | **GRAYSON POWER PLANT** | **RGA LUST** | **S114628681**
**800 AIR WAY** | **N/A**
**GLENDALE, CA**

**Site 11 of 15 in cluster A**

**Actual: 468 ft.**

RGA LUST:

1993 GRAYSON POWER PLANT 800 AIR WAY

---

**A12 Target Property** | **GWP UTILITY OPERATIONS CENTER STORAGE** | **FINDS** | **1016075265**
**800 AIR WAY** | **ECHO** | **N/A**
**GLENDALE, CA 91201**

**Site 12 of 15 in cluster A**

**Actual: 468 ft.**

FINDS:

Registry ID: 110013829330

Environmental Interest/Information System

CAMDBS (Clean Air Markets Division Business System) is a national information system that supports the implementation of market-based air pollution control programs administered by the Clean Air Markets Division, within the Office of Air and Radiation. These programs include the Acid Rain Program, established by Title IV of the Clean Air Act Amendments of 1990, and regional programs designed reduce the transport of ozone. These emissions trading programs allows regulated facilities (primarily electric utilities) to adopt the most cost-effective strategies to reduce emissions at their units. Units that reduce their emissions below the number of allowances they hold -- each allowance is equivalent to one ton of sulfur dioxide or nitrogen oxides -- may trade allowances with other units in their system, sell them to other utilities on the open market or through EPA auctions, or bank them to cover emissions in future years. CAMDBS functions include registering responsible officials, establishing allowance accounts, reporting hourly emissions data, and transferring allowances between accounts.

AFS (Aerometric Information Retrieval System (AIRS) Facility Subsystem) replaces the former Compliance Data System (CDS), the National Emission Data System (NEDS), and the Storage and Retrieval of Aerometric Data (SAROAD). AIRS is the national repository for information concerning airborne pollution in the United States. AFS is used to track emissions and compliance data from industrial plants. AFS data are utilized by states to prepare State Implementation Plans to comply with regulatory programs and by EPA as an input for the estimation of total national emissions. AFS is undergoing a major redesign to support facility operating permits required under Title V of the Clean Air Act.

California Hazardous Waste Tracking System - Datamart (HWTS-DATAMART) provides California with information on hazardous waste shipments for generators, transporters, and treatment, storage, and disposal facilities.

HAZARDOUS AIR POLLUTANT MAJOR

US Emissions & Generation Resource Database (EGRID) contains data on emissions and resource mix for virtually every power plant and company that generates electricity in the United States.

**GWP UTILITY OPERATIONS CENTER STORAGE (Continued)** **1016075265**

RCRAInfo is a national information system that supports the Resource Conservation and Recovery Act (RCRA) program through the tracking of events and activities related to facilities that generate, transport, and treat, store, or dispose of hazardous waste. RCRAInfo allows RCRA program staff to track the notification, permit, compliance, and corrective action activities required under RCRA.

ELECTRIC GENERATOR

AIR MAJOR

US EPA Risk Management Plan (RMP) database stores the risk management plans reported by companies that handle, manufacture, use, or store certain flammable or toxic substances, as required under section 112(r) of the Clean Air Act (CAA).

GREENHOUSE GAS REPORTER

ECHO:

| | |
|---|---|
| Envid: | 1016075265 |
| Registry ID: | 110013829330 |
| DFR URL: | http://echo.epa.gov/detailed_facility_report?fid=110013829330 |

---

**A13 Target Property** | **GLENDALE CITY, GLENDALE WATER & POWER**
**800 AIR WAY**
**GLENDALE, CA 91201** | **SWEEPS UST** **S104159992**
**EMI** **N/A**
**LOS ANGELES CO. HMS**

**Site 13 of 15 in cluster A**

**Actual: 468 ft.**

SWEEPS UST:

| | |
|---|---|
| Status: | Active |
| Comp Number: | 13086 |
| Number: | 9 |
| Board Of Equalization: | Not reported |
| Referral Date: | 12-07-90 |
| Action Date: | 12-07-90 |
| Created Date: | 06-30-89 |
| Owner Tank Id: | Not reported |
| SWRCB Tank Id: | Not reported |
| Tank Status: | Not reported |
| Capacity: | Not reported |
| Active Date: | Not reported |
| Tank Use: | Not reported |
| STG: | Not reported |
| Content: | Not reported |
| Number Of Tanks: | Not reported |

| | |
|---|---|
| Status: | Not reported |
| Comp Number: | 13086 |
| Number: | Not reported |
| Board Of Equalization: | Not reported |
| Referral Date: | Not reported |
| Action Date: | Not reported |
| Created Date: | Not reported |
| Owner Tank Id: | Not reported |
| SWRCB Tank Id: | 19-070-013086-000001 |

**GLENDALE CITY, GLENDALE WATER & POWER (Continued)** **S104159992**

| | |
|---|---|
| Tank Status: | Not reported |
| Capacity: | 40000 |
| Active Date: | Not reported |
| Tank Use: | UNKNOWN |
| STG: | PRODUCT |
| Content: | Not reported |
| Number Of Tanks: | 7 |

| | |
|---|---|
| Status: | Not reported |
| Comp Number: | 13086 |
| Number: | Not reported |
| Board Of Equalization: | Not reported |
| Referral Date: | Not reported |
| Action Date: | Not reported |
| Created Date: | Not reported |
| Owner Tank Id: | Not reported |
| SWRCB Tank Id: | 19-070-013086-000002 |
| Tank Status: | Not reported |
| Capacity: | 40000 |
| Active Date: | Not reported |
| Tank Use: | UNKNOWN |
| STG: | PRODUCT |
| Content: | Not reported |
| Number Of Tanks: | Not reported |

| | |
|---|---|
| Status: | Not reported |
| Comp Number: | 13086 |
| Number: | Not reported |
| Board Of Equalization: | Not reported |
| Referral Date: | Not reported |
| Action Date: | Not reported |
| Created Date: | Not reported |
| Owner Tank Id: | Not reported |
| SWRCB Tank Id: | 19-070-013086-000003 |
| Tank Status: | Not reported |
| Capacity: | 40000 |
| Active Date: | Not reported |
| Tank Use: | UNKNOWN |
| STG: | PRODUCT |
| Content: | Not reported |
| Number Of Tanks: | Not reported |

| | |
|---|---|
| Status: | Not reported |
| Comp Number: | 13086 |
| Number: | Not reported |
| Board Of Equalization: | Not reported |
| Referral Date: | Not reported |
| Action Date: | Not reported |
| Created Date: | Not reported |
| Owner Tank Id: | Not reported |
| SWRCB Tank Id: | 19-070-013086-000004 |
| Tank Status: | Not reported |
| Capacity: | 40000 |
| Active Date: | Not reported |
| Tank Use: | UNKNOWN |
| STG: | PRODUCT |
| Content: | Not reported |

**GLENDALE CITY, GLENDALE WATER & POWER (Continued)** **S104159992**

Number Of Tanks: Not reported

Status: Not reported
Comp Number: 13086
Number: Not reported
Board Of Equalization: Not reported
Referral Date: Not reported
Action Date: Not reported
Created Date: Not reported
Owner Tank Id: Not reported
SWRCB Tank Id: 19-070-013086-000005
Tank Status: Not reported
Capacity: 40000
Active Date: Not reported
Tank Use: UNKNOWN
STG: PRODUCT
Content: Not reported
Number Of Tanks: Not reported

Status: Not reported
Comp Number: 13086
Number: Not reported
Board Of Equalization: Not reported
Referral Date: Not reported
Action Date: Not reported
Created Date: Not reported
Owner Tank Id: Not reported
SWRCB Tank Id: 19-070-013086-000006
Tank Status: Not reported
Capacity: 40000
Active Date: Not reported
Tank Use: UNKNOWN
STG: PRODUCT
Content: Not reported
Number Of Tanks: Not reported

Status: Not reported
Comp Number: 13086
Number: Not reported
Board Of Equalization: Not reported
Referral Date: Not reported
Action Date: Not reported
Created Date: Not reported
Owner Tank Id: Not reported
SWRCB Tank Id: 19-070-013086-000007
Tank Status: Not reported
Capacity: 40000
Active Date: Not reported
Tank Use: UNKNOWN
STG: PRODUCT
Content: Not reported
Number Of Tanks: Not reported

EMI:
Year: 2006
County Code: 19
Air Basin: SC

**GLENDALE CITY, GLENDALE WATER & POWER (Continued)** **S104159992**

| | |
|---|---|
| Facility ID: | 800327 |
| Air District Name: | SC |
| SIC Code: | 4931 |
| Air District Name: | SOUTH COAST AQMD |
| Community Health Air Pollution Info System: | Not reported |
| Consolidated Emission Reporting Rule: | Not reported |
| Total Organic Hydrocarbon Gases Tons/Yr: | 26.39130319805305177 |
| Reactive Organic Gases Tons/Yr: | 12.003 |
| Carbon Monoxide Emissions Tons/Yr: | 22.169 |
| NOX - Oxides of Nitrogen Tons/Yr: | 31.583 |
| SOX - Oxides of Sulphur Tons/Yr: | 1.314 |
| Particulate Matter Tons/Yr: | 3.182 |
| Part. Matter 10 Micrometers and Smllr Tons/Yr: | 3.1447085 |

| | |
|---|---|
| Year: | 2007 |
| County Code: | 19 |
| Air Basin: | SC |
| Facility ID: | 800327 |
| Air District Name: | SC |
| SIC Code: | 4931 |
| Air District Name: | SOUTH COAST AQMD |
| Community Health Air Pollution Info System: | Not reported |
| Consolidated Emission Reporting Rule: | Not reported |
| Total Organic Hydrocarbon Gases Tons/Yr: | 26.28444973223270092 |
| Reactive Organic Gases Tons/Yr: | 12.003 |
| Carbon Monoxide Emissions Tons/Yr: | 22.169 |
| NOX - Oxides of Nitrogen Tons/Yr: | 31.583 |
| SOX - Oxides of Sulphur Tons/Yr: | 1.314 |
| Particulate Matter Tons/Yr: | 3.182 |
| Part. Matter 10 Micrometers and Smllr Tons/Yr: | 3.1461785 |

| | |
|---|---|
| Year: | 2008 |
| County Code: | 19 |
| Air Basin: | SC |
| Facility ID: | 800327 |
| Air District Name: | SC |
| SIC Code: | 4931 |
| Air District Name: | SOUTH COAST AQMD |
| Community Health Air Pollution Info System: | Not reported |
| Consolidated Emission Reporting Rule: | Not reported |
| Total Organic Hydrocarbon Gases Tons/Yr: | 31.76089208530213654 |
| Reactive Organic Gases Tons/Yr: | 12.641199276 |
| Carbon Monoxide Emissions Tons/Yr: | 29.244902 |
| NOX - Oxides of Nitrogen Tons/Yr: | 37.185282 |
| SOX - Oxides of Sulphur Tons/Yr: | 1.41162651 |
| Particulate Matter Tons/Yr: | 3.5038434695 |
| Part. Matter 10 Micrometers and Smllr Tons/Yr: | 3.46527017172635 |

| | |
|---|---|
| Year: | 2012 |
| County Code: | 19 |
| Air Basin: | SC |
| Facility ID: | 800327 |
| Air District Name: | SC |
| SIC Code: | 4931 |
| Air District Name: | SOUTH COAST AQMD |
| Community Health Air Pollution Info System: | Not reported |
| Consolidated Emission Reporting Rule: | Not reported |

**GLENDALE CITY, GLENDALE WATER & POWER (Continued)** **S104159992**

| | |
|---|---|
| Total Organic Hydrocarbon Gases Tons/Yr: | 80.396540888 |
| Reactive Organic Gases Tons/Yr: | 15.27215 |
| Carbon Monoxide Emissions Tons/Yr: | 62.80531 |
| NOX - Oxides of Nitrogen Tons/Yr: | 36.9569 |
| SOX - Oxides of Sulphur Tons/Yr: | 2.86879 |
| Particulate Matter Tons/Yr: | 35.62505 |
| Part. Matter 10 Micrometers and Smllr Tons/Yr: | 30.54736509 |

| | |
|---|---|
| Year: | 2013 |
| County Code: | 19 |
| Air Basin: | SC |
| Facility ID: | 800327 |
| Air District Name: | SC |
| SIC Code: | 4931 |
| Air District Name: | SOUTH COAST AQMD |
| Community Health Air Pollution Info System: | Not reported |
| Consolidated Emission Reporting Rule: | Not reported |
| Total Organic Hydrocarbon Gases Tons/Yr: | 72.576598192 |
| Reactive Organic Gases Tons/Yr: | 11.50565 |
| Carbon Monoxide Emissions Tons/Yr: | 56.00673 |
| NOX - Oxides of Nitrogen Tons/Yr: | 34.26449 |
| SOX - Oxides of Sulphur Tons/Yr: | 2.64317 |
| Particulate Matter Tons/Yr: | 30.38361 |
| Part. Matter 10 Micrometers and Smllr Tons/Yr: | 26.27022732 |

| | |
|---|---|
| Year: | 2014 |
| County Code: | 19 |
| Air Basin: | SC |
| Facility ID: | 800327 |
| Air District Name: | SC |
| SIC Code: | 4923 |
| Air District Name: | SOUTH COAST AQMD |
| Community Health Air Pollution Info System: | Not reported |
| Consolidated Emission Reporting Rule: | Not reported |
| Total Organic Hydrocarbon Gases Tons/Yr: | 45.135735634 |
| Reactive Organic Gases Tons/Yr: | 11.7334 |
| Carbon Monoxide Emissions Tons/Yr: | 61.95481 |
| NOX - Oxides of Nitrogen Tons/Yr: | 35.02166 |
| SOX - Oxides of Sulphur Tons/Yr: | 2.62852 |
| Particulate Matter Tons/Yr: | 35.70765 |
| Part. Matter 10 Micrometers and Smllr Tons/Yr: | 34.97008678 |

LOS ANGELES CO. HMS:

| | |
|---|---|
| Region: | LA |
| Permit Category: | T |
| Facility Id: | 010504-010433 |
| Facility Type: | 0 |
| Facility Status: | Removed |
| Area: | 3D |
| Permit Number: | 00001833T |
| Permit Status: | Removed |

| | |
|---|---|
| Region: | LA |
| Permit Category: | T |
| Facility Id: | 010504-013086 |
| Facility Type: | 0 |
| Facility Status: | Removed |

**GLENDALE CITY, GLENDALE WATER & POWER (Continued)** **S104159992**

Area: 3D
Permit Number: 00004815T
Permit Status: Removed

---

**A14 Target Property** **GRAYSON POWER PLANT**
**800 AIR WY**
**GLENDALE, CA**

**RGA LUST** **S114628682**
**N/A**

**Site 14 of 15 in cluster A**

**Actual: 468 ft.**

RGA LUST:

| | | |
|---|---|---|
| 1998 | GRAYSON POWER PLANT | 800 AIR WY |
| 1997 | GRAYSON POWER PLANT | 800 AIR WY |
| 1996 | GRAYSON POWER PLANT | 800 AIR WY |
| 1995 | GRAYSON POWER PLANT | 800 AIR WY |
| 1994 | GRAYSON POWER PLANT | 800 AIR WY |

---

**A15 Target Property** **CITY OF GLENDALE**
**800 AIRWAY ST**
**GLENDALE, CA 91201**

**SEMS-ARCHIVE** **1015732832**
**RCRA-SQG** **CAD980735864**

**Site 15 of 15 in cluster A**

**Actual: 468 ft.**

SEMS-ARCHIVE:
Site ID: 901992
EPA ID: CAD980735864
Federal Facility: N
NPL: Not on the NPL
Non NPL Status: NFRAP-Site does not qualify for the NPL based on existing information

**Following information was gathered from the prior CERCLIS update completed in 10/2013:**
Site ID: 0901992
Federal Facility: Not a Federal Facility
NPL Status: Not on the NPL
Non NPL Status: NFRAP-Site does not qualify for the NPL based on existing information

CERCLIS-NFRAP Site Contact Details:
Contact Sequence ID: 13285079.00000
Person ID: 13003854.00000

Contact Sequence ID: 13290674.00000
Person ID: 13003858.00000

Contact Sequence ID: 13296532.00000
Person ID: 13004003.00000

CERCLIS-NFRAP Assessment History:
Action: DISCOVERY
Date Started: / /
Date Completed: 08/01/79
Priority Level: Not reported

Action: ARCHIVE SITE
Date Started: / /
Date Completed: 11/01/84

**CITY OF GLENDALE (Continued)** **1015732832**

Priority Level: Not reported

Action: PRELIMINARY ASSESSMENT
Date Started: 08/01/84
Date Completed: 11/01/84
Priority Level: NFRAP-Site does not qualify for the NPL based on existing information

RCRA-SQG:
Date form received by agency: 12/30/2002
Facility name: CITY OF GLENDALE
Facility address: 800 AIRWAY ST
GLENDALE, CA 91201
EPA ID: CAD980735864
Mailing address: 780 FLOWER ST
GLENDALE, CA 91201
Contact: VASKEN DEMIRJIAN
Contact address: 780 FLOWER ST
GLENDALE, CA 91201
Contact country: US
Contact telephone: 818-548-4030
Contact email: Not reported
EPA Region: 09
Classification: Small Small Quantity Generator
Description: Handler: generates more than 100 and less than 1000 kg of hazardous waste during any calendar month and accumulates less than 6000 kg of hazardous waste at any time; or generates 100 kg or less of hazardous waste during any calendar month, and accumulates more than 1000 kg of hazardous waste at any time

Owner/Operator Summary:
Owner/operator name: CITY OF GLENDALE
Owner/operator address: Not reported
Not reported
Owner/operator country: Not reported
Owner/operator telephone: Not reported
Legal status: Municipal
Owner/Operator Type: Owner
Owner/Op start date: 01/01/2003
Owner/Op end date: Not reported

Owner/operator name: GLENDALE WATER AND POWER
Owner/operator address: Not reported
Not reported
Owner/operator country: US
Owner/operator telephone: Not reported
Legal status: Municipal
Owner/Operator Type: Operator
Owner/Op start date: 05/15/1941
Owner/Op end date: Not reported

Handler Activities Summary:
U.S. importer of hazardous waste: No
Mixed waste (haz. and radioactive): No
Recycler of hazardous waste: No
Transporter of hazardous waste: No
Treater, storer or disposer of HW: No

**CITY OF GLENDALE (Continued)** **1015732832**

Underground injection activity: No
On-site burner exemption: No
Furnace exemption: No
Used oil fuel burner: No
Used oil processor: No
User oil refiner: No
Used oil fuel marketer to burner: No
Used oil Specification marketer: No
Used oil transfer facility: No
Used oil transporter: No

Historical Generators:
Date form received by agency: 12/30/2002
Site name: CITY OF GLENDALE
Classification: Large Quantity Generator

. Waste code: D001
. Waste name: IGNITABLE WASTE

. Waste code: D002
. Waste name: CORROSIVE WASTE

. Waste code: D004
. Waste name: ARSENIC

. Waste code: D009
. Waste name: MERCURY

. Waste code: D039
. Waste name: TETRACHLOROETHYLENE

Date form received by agency: 09/01/1996
Site name: GLENDALE CITY OF PUB SERV
Classification: Small Quantity Generator

Date form received by agency: 01/09/1987
Site name: GLENDALE CITY OF PUB SERV
Classification: Large Quantity Generator

Violation Status: No violations found

---

**NPL** **SAN FERNANDO VALLEY (AREA 2)** **NPL** **1000710134**
**Region** **CRYSTAL SPRINGS WELLFIELD AREA** **SEMS** **CAD980894901**
**GLENDALE, CA 91209** **US ENG CONTROLS**
**< 1/8** **ENVIROSTOR**
**1 ft.** **HIST Cal-Sites**
**ROD**
**PRP**
**ICIS**
**FINDS**
**Cortese**
**ECHO**

NPL:
EPA ID: CAD980894901
Cerclis ID: 902252
EPA Region: 9
Federal: N

**SAN FERNANDO VALLEY (AREA 2) (Continued)** **1000710134**

Final Date: 1986-06-10 00:00:00
Site Score: 42.240000000000002
Latitude: 34.163130000000002
Longitude: -118.286

Category Details:
NPL Status: Currently on the Final NPL
Category Description: Depth To Aquifer-<= 10 Feet
Category Value: 1

NPL Status: Currently on the Final NPL
Category Description: Distance To Nearest Population-> 0 And <= 1/4 Mile
Category Value: 10

Site Details:
Site Name: SAN FERNANDO VALLEY (AREA 2)
Site Status: Final
Site Zip: 91209
Site City: GLENDALE
Site State: CA
Federal Site: No
Site County: LOS ANGELES
EPA Region: 09
Date Proposed: 10/15/84
Date Deleted: Not reported
Date Finalized: 06/10/86

Substance Details:
NPL Status: Currently on the Final NPL
Substance ID: Not reported
Substance: Not reported
CAS #: Not reported
Pathway: Not reported
Scoring: Not reported

NPL Status: Currently on the Final NPL
Substance ID: U044
Substance: CHLOROFORM
CAS #: 67-66-3
Pathway: GROUND WATER PATHWAY
Scoring: 4

NPL Status: Currently on the Final NPL
Substance ID: U210
Substance: TETRACHLOROETHENE
CAS #: 127-18-4
Pathway: GROUND WATER PATHWAY
Scoring: 2

NPL Status: Currently on the Final NPL
Substance ID: U228
Substance: TRICHLOROETHYLENE (TCE)
CAS #: 79-01-6
Pathway: GROUND WATER PATHWAY
Scoring: 2

**SAN FERNANDO VALLEY (AREA 2) (Continued)** **1000710134**

Summary Details:

Conditions at proposal October 15, 1984): San Fernando Valley Area 2) is an area of contaminated ground water located in the vicinity of the Crystal Springs Well Field in the Cities of Los Angeles and Glendale, Los Angeles County, California. This area is part of the San Fernando Valley Basin, a natural underground reservoir that represents an important source of drinking water for at least 3 million people in the Los Angeles metropolitan area. The contaminated ground water, which underlies an area of approximately 6,680 acres, contains trichloroethylene TCE) and perchloroethylene PCE), according to tests conducted by the California Department of Health Services, as well as numerous local government agencies. The State s recommended drinking water guidelines for TCE and PCE 5 and 4 parts per billion respectively) are exceeded in a number of public wells in this area. To alleviate this contamination, wells are either taken out of service or blended withwater from clean sources to ensure that the public receives water with TCE/PCE concentrations below the State s guidelines. Status June 10, 1986):
EPA and the Los Angeles Department of Water and Power are entering into a cooperative agreement for a remedial investigation of the San Fernando Valley Basin and a feasibility study targeted at Area 1, the most contaminated area. The RI is scheduled to begin in early 1986.

Site Status Details:

| | |
|---|---|
| NPL Status: | Final |
| Proposed Date: | 10/15/1984 |
| Final Date: | 06/10/1986 |
| Deleted Date: | Not reported |

Narratives Details:

| | |
|---|---|
| NPL Name: | SAN FERNANDO VALLEY (AREA 2) |
| City: | GLENDALE |
| State: | CA |

SEMS:

| | |
|---|---|
| Site ID: | 902252 |
| EPA ID: | CAD980894901 |
| Federal Facility: | N |
| NPL: | Currently on the Final NPL |
| Non NPL Status: | Not reported |

**Following information was gathered from the prior CERCLIS update completed in 10/2013:**

| | |
|---|---|
| Site ID: | 0902252 |
| EPA ID: | CAD980894901 |
| Facility County: | LOS ANGELES |
| Short Name: | SAN FERNANDO VALLEY (AREA |
| Congressional District: | 28 |
| IFMS ID: | 09N2 |
| SMSA Number: | 4480 |
| USGC Hydro Unit: | 18070105 |
| Federal Facility: | Not a Federal Facility |
| DMNSN Number: | 6680.00000 |
| Site Orphan Flag: | N |
| RCRA ID: | Not reported |
| USGS Quadrangle: | Not reported |
| Site Init By Prog: | Not reported |
| NFRAP Flag: | Not reported |

**SAN FERNANDO VALLEY (AREA 2) (Continued)** **1000710134**

Parent ID: Not reported
RST Code: Not reported
EPA Region: 09
Classification: Wells
Site Settings Code: UR
NPL Status: Currently on the Final NPL
DMNSN Unit Code: ACRE
RBRAC Code: Not reported
RResp Fed Agency Code: Not reported
Non NPL Status: Not reported
Non NPL Status Date: / /
Site Fips Code: 06037
CC Concurrence Date: / /
CC Concurrence FY: Not reported
Alias EPA ID: Not reported
Site FUDS Flag: Not reported

CERCLIS Site Contact Name(s):

Contact ID: 13002904.00000
Contact Name: Lisa Hanusiak
Contact Tel: (415) 972-3152
Contact Title: Remedial Project Manager (RPM)
Contact Email: Not reported

Contact ID: 13002702.00000
Contact Name: Zizi Searles
Contact Tel: (415) 972-3178
Contact Title: Remedial Project Manager (RPM)
Contact Email: Not reported

Contact ID: 13003854.00000
Contact Name: Leslie Ramirez
Contact Tel: (415) 972-3978
Contact Title: Site Assessment Manager (SAM)
Contact Email: Not reported

Contact ID: 13003858.00000
Contact Name: Sharon Murray
Contact Tel: (415) 972-4250
Contact Title: Site Assessment Manager (SAM)
Contact Email: Not reported

Contact ID: 13004003.00000
Contact Name: Carl Brickner
Contact Tel: Not reported
Contact Title: Site Assessment Manager (SAM)
Contact Email: Not reported

CERCLIS Site Alias Name(s):

Alias ID: 101
Alias Name: SAN FERNANDO VLY BASIN CRYSTAL SPGS AREA
Alias Address: Not reported
CA
Alias ID: 201
Alias Name: GLENDALE OPERABLE UNIT
Alias Address: Not reported

**SAN FERNANDO VALLEY (AREA 2) (Continued)** **1000710134**

CA
Alias ID: 202
Alias Name: SAN FERNANDO VALLEY (AREA 2)
Alias Address: CRYSTAL SPRINGS WELLFIELD AREA
GLENDALE, CA 91209
Alias ID: 203
Alias Name: SAN FERNANDO VALLEY (AREA 2)
Alias Address: CRYSTAL SPRINGS WELLFIELD AREA
LOS ANGELES/GLENDALE, CA 91209
Alias ID: 201
Alias Comments: PREVIOUS EPA ID# AZD 981 416 977
Site Description: The Glendale Study Area is located within the San Fernando Basin. The San Fernando Basin is located within the Upper Los Angeles River Area (ULARA), which consists of the entire watershed of the Los Angeles River and its various tributaries. The San Fernando Basin covers approximately 122,800 acres and comprises 91.2 percent of the ULARA alluvial fill. It is bounded on the north and northwest by the Santa Susana Mountains, on the northeast by the San Gabriel Mountains, on the west by the Simi Hills, and on the south by the Santa Monica Mountains. The San Fernando Basin is a significant source of drinking water, with an estimated total volume of 3 million acre-feet of groundwater stored in aquifers within the alluvial fill of the basin. The groundwater of the San Fernando Basin has been used as a source of drinking water for more than 800,000 residents within the cities of Los Angeles, Burbank, Glendale, and San Fernando. Groundwater extractions within the San Fernando Basin typically provide 15 percent of Los Angeles' annual average water supply and historically have accounted for between 50 and 100 percent of the water needs of the other cities. The Glendale Study Area is in the vicinity of the Crystal Springs National Priorities List (NPL) Site, one of the four San Fernando Valley Superfund NPL sites, and is adjacent to the Los Angeles River. The Glendale Study Area includes two portions of the aquifer where high concentrations of contaminants have been identified: the North Plume and the South Plume. Although contamination has been detected throughout the Glendale Study Area in an apparently contiguous plume, differences exist between the North Plume and South Plume, including the types of contaminants detected and the concentrations of the contaminants. The Glendale North and South Plumes are separated by an area of groundwater with lower concentrations of contamination. The Glendale South OU includes the South Plume of VOC contamination and adjacent areas where contamination is known or believed to have migrated. The Glendale South OU extends south towards the Pollock Operable Unit. Some of the monitoring wells constructed to help define the extent of the Pollock OU are located within the Glendale South OU. In 1990, an analysis was performed to evaluate the need for an OU within the Crystal Springs NPL site (CH2M Hill, 1990). This analysis included a qualitative comparison based on known groundwater contamination, potential downgradient impacts and water supply. This analysis concluded that there was a need for an OU within the Crystal Springs NPL site because of the: 1) high concentrations of TCE and PCE present in groundwater, 2) critical loss of groundwater production in the Glendale area and 3) potential impact of contaminating groundwater downgradient from the Crystal Springs NPL site. Additional data collection was recommended to more adequately characterize the horizontal and vertical distribution of contamination in the aquifer, and also to improve the definition of the hydrogeology of the area. EPA conducted a remedial investigation (RI) that characterized the nature and extent of contamination in the Glendale Study Area. Upon completion of the Remedial Investigation Report for the Glendale Study Area (January 1992), a feasibility study (FS) was undertaken for the Glendale South OU which evaluated a range of cleanup alternatives for addressing the contaminated groundwater. The FS report

**SAN FERNANDO VALLEY (AREA 2) (Continued)** **1000710134**

entitled Feasibility Study for the Glendale Study Area South Plume Operable Unit was completed in August 1992. In 1980, after finding organic chemical contamination in the groundwater of the San Gabriel Valley, the California Department of Health Services (DHS) requested that all major water purveyors using groundwater in the San Fernando Valley conduct tests for the presence of certain industrial chemicals in the water they were serving. The results of initial tests and of subsequent testing revealed the presence of volatile organic compound (VOC) contamination in the groundwater of the San Fernando Valley. These findings resulted in a number of municipal supply wells for the cities of Los Angeles, Burbank, and Glendale being taken out of service. The primary contaminants of concern were and are the solvents trichloroethylene (TCE) and perchloroethylene (PCE), which have been widely used in a variety of industries including machinery degreasing, metal plating and dry cleaning. In 1984, EPA proposed four sites within the San Fernando Valley for inclusion on the NPL and in 1986 the sites were added to the list. Each site encompasses an area in which production wells produced groundwater containing concentrations of TCE and PCE above State and Federal standards in 1984. The four NPL sites in the San Fernando Valley are the North Hollywood, Crystal Springs, Verdugo, and Pollock sites, also referred to as San Fernando Valley Areas 1, 2, 3, and 4, respectively. The EPA has now shifted from defining the sites based on production wells to managing it as one large site defined by the extent of the contaminated plume of groundwater. The San Fernando Valley Study Area includes the four sites as listed on the NPL and adjacent areas where contamination has or may have migrated. A basinwide groundwater RI report for the San Fernando Valley Study Area was completed in December 1992. Groundwater wells installed by EPA as part of the basinwide groundwater RI are routinely sampled to continue to monitor the nature and extent of the groundwater contamination in the San Fernando Valley. In addition, monitoring well data gathered at individual facilities in the San Fernando are included in the EPA database which is used to generate plume maps of the basin. EPA has previously signed Record of Decision (ROD) documents for two OUs in the San Fernando Valley: the North Hollywood OU (1987) and the Burbank OU (1989). The North Hollywood OU interim remedy is currently operating and the Burbank OU is in the remedial design phase. In the Glendale Study Area, EPA has identified two OUs: the Glendale North Plume OU and the Glendale South Plume OU. In addition, EPA has recently initiated an RI/FS for an OU in the Pollock area of the San Fernando Valley. All of these OUs represent interim cleanups currently in progress throughout the eastern portion of the San Fernando Valley. All remedial actions established by EPA thus far in the ROD for each OU have been interim measures. EPA has not yet selected a final remedy for the entire San Fernando Valley. The most prevalent groundwater contaminants in the Glendale Study area are TCE and PCE. In 1992, the highest concentrations of TCE and PCE detected in EPA monitoring wells in the San Fernando Valley were 7100 ppb and 160 ppb, respectively. Groundwater samples from wells installed at industrial facilities in the San Fernando Valley near potential sources of contamination have shown concentrations greater than 30,000 ppb for TCE and over 15,000 ppb for PCE. The maximum levels of 820 ppb of TCE and 220 ppb of PCE were detected in shallow wells located in the south plume portion of the Glendale Study Area. The MCL for both TCE and PCE is 5 ppb. Nitrate, ah inorganic contaminant, has been detected consistently at levels in excess of the MCL (45 milligrams per liter (mg/l), also referred to as parts per million (ppm) as nitrate, or 10 mg/l nitrate as nitrogen) in the groundwater of the Glendale Study Area. The nitrate contamination is likely to be the result of past agricultural practices and/or septic systems in the San Fernando Valley. It should be noted that the Cities of Glendale and Los Angeles closely monitor the quality of drinking water delivered to residents. The water served to residents must meet all Federal and state drinking water

**SAN FERNANDO VALLEY (AREA 2) (Continued)** **1000710134**

requirements. Currently, nearly all of the water delivered by the City of Glendale is purchased from the Metropolitan Water District (MWD) of Southern California. The City uses a limited amount of groundwater from a small percentage of its nine production wells in the San Fernando Valley. If the levels of VOCs and other contaminants detected in the groundwater of production wells are equal to or less than 10 times MCLs, the State of California Department of Health Services, Office of Drinking Water permits the City to extract the water, blend it with MWD water to meet all drinking water standards, and convey the extracted, blended water to its public distribution system. As described briefly in Section 1 above, the Glendale Study Area includes two portions of the aquifer where high concentrations of contaminants have been identified: the north plume and the south plume. A remedial investigation (RI) that characterized the nature and extent of contamination in the Glendale Study Area was completed in (January 1992). The Glendale Study Area RI included a characterization of the nature and extent of contamination, baseline risk assessments, and other RI data for both the north and south plumes. However, separate FS reports evaluating a range of cleanup alternatives for the contaminated groundwater were prepared for each plume. The Glendale South OU FS report and subsequent Proposed Plan were finalized in August 1992 and September 1992, respectively. The Glendale North OU FS report was completed in April 1992 and the Proposed Plan was completed in June 1992. EPA's preferred alternatives as described in the Proposed Plans were: extraction of 3000 gallons per minute (gpm) of contaminated groundwater for Glendale North and 2000 gpm for Glendale South, treatment of VOCs by air stripping or liquid phase GAC, and conveyance of the treated water to a water purveyor, where it would be blended with water of a quality such that the treated, blended water would meet all drinking water standards, for eventual distribution through a public water system. As a contingency, if all or part of the treated water was not accepted by the purveyors (possibly due to water supply needs), the treated water from Glendale North would be reinjected and for Glendale South would be recharged at the Headworks Spreading Grounds. In response to comments by the City of Glendale on the Glendale North and South OU Proposed Plans and in order to decrease overall costs associated with the OUs, EPA has determined that the treatment plants for the Glendale North and Glendale South OUs will be combined at one location and the total 5,000 gpm of treated water will be conveyed to the City of Glendale for distribution to its public water supply system. The exact configuration of the combined treatment plant will be determined during the remedial design phase of the project. The Glendale North OU Record of Decision also reflects this decision to combine the treatment plants. However, if EPA determines that combining the treatment plants will significantly delay or hinder the implementation of the Glendale South OU, the treatment plants will not be combined. Furthermore, if the City of Glendale does not accept any or all of the treated water (possibly due to water supply needs), any remaining portion of water will be 1) offered to another San Fernando Valley water purveyor or 2) recharged into the aquifer at the Headworks Spreading Grounds. The interim remedial action selected for the Glendale South Operable Unit (OU) represents a discrete element in the overall long-term remediation of groundwater in the eastern portion of the San Fernando Valley. An interim action ROD addressing the Glendale South Operable Unit of the San Fernando Valley Area 2 was completed in June, 1993.

CERCLIS Assessment History:

| | |
|---|---|
| Action Code: | 001 |
| Action: | DISCOVERY |
| Date Started: | / / |
| Date Completed: | 12/01/83 |
| Priority Level: | Not reported |

**SAN FERNANDO VALLEY (AREA 2) (Continued)** **1000710134**

| | |
|---|---|
| Operable Unit: | SITEWIDE |
| Primary Responsibility: | State, Fund Financed |
| Planning Status: | Not reported |
| Urgency Indicator: | Not reported |
| Action Anomaly: | Not reported |

For detailed financial records, contact EDR for a Site Report.:

| | |
|---|---|
| Action Code: | 001 |
| Action: | SITE INSPECTION |
| Date Started: | / / |
| Date Completed: | 04/01/84 |
| Priority Level: | Higher priority for further assessment |
| Operable Unit: | SITEWIDE |
| Primary Responsibility: | State, Fund Financed |
| Planning Status: | Not reported |
| Urgency Indicator: | Not reported |
| Action Anomaly: | Not reported |

For detailed financial records, contact EDR for a Site Report.:

| | |
|---|---|
| Action Code: | 001 |
| Action: | PRELIMINARY ASSESSMENT |
| Date Started: | / / |
| Date Completed: | 04/01/84 |
| Priority Level: | Higher priority for further assessment |
| Operable Unit: | SITEWIDE |
| Primary Responsibility: | State, Fund Financed |
| Planning Status: | Not reported |
| Urgency Indicator: | Not reported |
| Action Anomaly: | Not reported |

For detailed financial records, contact EDR for a Site Report.:

| | |
|---|---|
| Action Code: | 001 |
| Action: | HAZARD RANKING SYSTEM PACKAGE |
| Date Started: | / / |
| Date Completed: | 04/01/84 |
| Priority Level: | Not reported |
| Operable Unit: | SITEWIDE |
| Primary Responsibility: | State, Fund Financed |
| Planning Status: | Not reported |
| Urgency Indicator: | Not reported |
| Action Anomaly: | Not reported |

For detailed financial records, contact EDR for a Site Report.:

| | |
|---|---|
| Action Code: | 001 |
| Action: | PROPOSAL TO NATIONAL PRIORITIES LIST |
| Date Started: | / / |
| Date Completed: | 10/15/84 |
| Priority Level: | Not reported |
| Operable Unit: | SITEWIDE |
| Primary Responsibility: | EPA Fund-Financed |
| Planning Status: | Not reported |

**SAN FERNANDO VALLEY (AREA 2) (Continued)** **1000710134**

Urgency Indicator: Not reported
Action Anomaly: Not reported

For detailed financial records, contact EDR for a Site Report.:

Action Code: 001
Action: NATIONAL PRIORITIES LIST RESPONSIBLE PARTY SEARCH
Date Started: 09/30/84
Date Completed: 08/15/85
Priority Level: Not reported
Operable Unit: SITEWIDE
Primary Responsibility: Federal Enforcement
Planning Status: Not reported
Urgency Indicator: Not reported
Action Anomaly: Not reported

For detailed financial records, contact EDR for a Site Report.:

Action Code: 001
Action: FINAL LISTING ON NATIONAL PRIORITIES LIST
Date Started: / /
Date Completed: 06/10/86
Priority Level: Not reported
Operable Unit: SITEWIDE
Primary Responsibility: EPA Fund-Financed
Planning Status: Not reported
Urgency Indicator: Not reported
Action Anomaly: Not reported

For detailed financial records, contact EDR for a Site Report.:

Action Code: 001
Action: REMOVAL ASSESSMENT
Date Started: 06/17/91
Date Completed: 06/17/91
Priority Level: Not reported
Operable Unit: SITEWIDE
Primary Responsibility: EPA Fund-Financed
Planning Status: Primary
Urgency Indicator: Not reported
Action Anomaly: Not reported

For detailed financial records, contact EDR for a Site Report.:

Action Code: 001
Action: Notice Letters Issued
Date Started: / /
Date Completed: 08/31/92
Priority Level: Not reported
Operable Unit: SITEWIDE
Primary Responsibility: Federal Enforcement
Planning Status: Not reported
Urgency Indicator: Not reported
Action Anomaly: Not reported

**SAN FERNANDO VALLEY (AREA 2) (Continued)** **1000710134**

For detailed financial records, contact EDR for a Site Report.:

| | |
|---|---|
| Action Code: | 002 |
| Action: | Notice Letters Issued |
| Date Started: | / / |
| Date Completed: | 11/12/92 |
| Priority Level: | Not reported |
| Operable Unit: | SITEWIDE |
| Primary Responsibility: | EPA Fund-Financed |
| Planning Status: | Not reported |
| Urgency Indicator: | Not reported |
| Action Anomaly: | Not reported |

For detailed financial records, contact EDR for a Site Report.:

| | |
|---|---|
| Action Code: | 003 |
| Action: | Notice Letters Issued |
| Date Started: | / / |
| Date Completed: | 11/24/92 |
| Priority Level: | Not reported |
| Operable Unit: | SITEWIDE |
| Primary Responsibility: | EPA Fund-Financed |
| Planning Status: | Not reported |
| Urgency Indicator: | Not reported |
| Action Anomaly: | Not reported |

For detailed financial records, contact EDR for a Site Report.:

| | |
|---|---|
| Action Code: | 001 |
| Action: | ECOLOGICAL RISK ASSESSMENT |
| Date Started: | / / |
| Date Completed: | 12/15/92 |
| Priority Level: | Not reported |
| Operable Unit: | OVERALL SITE/AREAWIDE |
| Primary Responsibility: | State, Fund Financed |
| Planning Status: | Not reported |
| Urgency Indicator: | Not reported |
| Action Anomaly: | Not reported |

For detailed financial records, contact EDR for a Site Report.:

| | |
|---|---|
| Action Code: | 001 |
| Action: | RISK/HEALTH ASSESSMENT |
| Date Started: | / / |
| Date Completed: | 12/15/92 |
| Priority Level: | Not reported |
| Operable Unit: | OVERALL SITE/AREAWIDE |
| Primary Responsibility: | State, Fund Financed |
| Planning Status: | Not reported |
| Urgency Indicator: | Not reported |
| Action Anomaly: | Not reported |

For detailed financial records, contact EDR for a Site Report.:

**SAN FERNANDO VALLEY (AREA 2) (Continued)** **1000710134**

| | |
|---|---|
| Action Code: | 003 |
| Action: | COMBINED REMEDIAL INVESTIGATION/FEASIBILITY STUDY |
| Date Started: | 09/06/89 |
| Date Completed: | 06/18/93 |
| Priority Level: | Not reported |
| Operable Unit: | GLENDALE SOUTH(TO ROD)&COMBINE |
| Primary Responsibility: | State, Fund Financed |
| Planning Status: | Primary |
| Urgency Indicator: | Not reported |
| Action Anomaly: | Not reported |

For detailed financial records, contact EDR for a Site Report.:

| | |
|---|---|
| Action Code: | 002 |
| Action: | COMBINED REMEDIAL INVESTIGATION/FEASIBILITY STUDY |
| Date Started: | 09/06/89 |
| Date Completed: | 06/18/93 |
| Priority Level: | Not reported |
| Operable Unit: | GLENDALE NORTH TO RD ONLY |
| Primary Responsibility: | State, Fund Financed |
| Planning Status: | Primary |
| Urgency Indicator: | Not reported |
| Action Anomaly: | Not reported |

For detailed financial records, contact EDR for a Site Report.:

| | |
|---|---|
| Action Code: | 002 |
| Action: | RECORD OF DECISION |
| Date Started: | / / |
| Date Completed: | 06/18/93 |
| Priority Level: | Not reported |
| Operable Unit: | GLENDALE SOUTH(TO ROD)&COMBINE |
| Primary Responsibility: | EPA Fund-Financed |
| Planning Status: | Primary |
| Urgency Indicator: | Not reported |
| Action Anomaly: | Not reported |

For detailed financial records, contact EDR for a Site Report.:

| | |
|---|---|
| Action Code: | 003 |
| Action: | RECORD OF DECISION |
| Date Started: | / / |
| Date Completed: | 06/18/93 |
| Priority Level: | Not reported |
| Operable Unit: | GLENDALE NORTH TO RD ONLY |
| Primary Responsibility: | EPA Fund-Financed |
| Planning Status: | Primary |
| Urgency Indicator: | Not reported |
| Action Anomaly: | Not reported |

For detailed financial records, contact EDR for a Site Report.:

| | |
|---|---|
| Action Code: | 002 |
| Action: | NATIONAL PRIORITIES LIST RESPONSIBLE PARTY SEARCH |
| Date Started: | 10/01/89 |
| Date Completed: | 06/30/93 |
| Priority Level: | Not reported |

**SAN FERNANDO VALLEY (AREA 2) (Continued)** **1000710134**

Operable Unit: SITEWIDE
Primary Responsibility: Federal Enforcement
Planning Status: Primary
Urgency Indicator: Not reported
Action Anomaly: Not reported

For detailed financial records, contact EDR for a Site Report.:

Action Code: 001
Action: REMEDIAL DESIGN/REMEDIAL ACTION NEGOTIATIONS
Date Started: 09/30/93
Date Completed: 03/30/94
Priority Level: Not reported
Operable Unit: SITEWIDE
Primary Responsibility: Federal Enforcement
Planning Status: Alternate
Urgency Indicator: Not reported
Action Anomaly: Not reported

For detailed financial records, contact EDR for a Site Report.:

Action Code: 001
Action: ADMINISTRATIVE ORDER ON CONSENT
Date Started: / /
Date Completed: 03/30/94
Priority Level: Not reported
Operable Unit: SITEWIDE
Primary Responsibility: Federal Enforcement
Planning Status: Primary
Urgency Indicator: Not reported
Action Anomaly: Not reported

For detailed financial records, contact EDR for a Site Report.:

Action Code: 002
Action: POTENTIALLY RESPONSIBLE PARTY REMEDIAL DESIGN
Date Started: 05/01/94
Date Completed: 11/11/96
Priority Level: Not reported
Operable Unit: GLENDALE SOUTH(TO ROD)&COMBINE
Primary Responsibility: Responsible Party
Planning Status: Primary
Urgency Indicator: Not reported
Action Anomaly: Not reported

For detailed financial records, contact EDR for a Site Report.:

Action Code: 001
Action: POTENTIALLY RESPONSIBLE PARTY REMEDIAL DESIGN
Date Started: 05/01/94
Date Completed: 11/11/96
Priority Level: Not reported
Operable Unit: GLENDALE NORTH TO RD ONLY
Primary Responsibility: Responsible Party
Planning Status: Project Suspended
Urgency Indicator: Not reported
Action Anomaly: Not reported

**SAN FERNANDO VALLEY (AREA 2) (Continued)** **1000710134**

For detailed financial records, contact EDR for a Site Report.:

| | |
|---|---|
| Action Code: | 002 |
| Action: | REMEDIAL DESIGN/REMEDIAL ACTION NEGOTIATIONS |
| Date Started: | 10/12/95 |
| Date Completed: | 11/26/96 |
| Priority Level: | Not reported |
| Operable Unit: | SITEWIDE |
| Primary Responsibility: | Federal Enforcement |
| Planning Status: | Primary |
| Urgency Indicator: | Not reported |
| Action Anomaly: | Not reported |

For detailed financial records, contact EDR for a Site Report.:

| | |
|---|---|
| Action Code: | 001 |
| Action: | UNILATERAL ADMIN ORDER |
| Date Started: | / / |
| Date Completed: | 11/26/96 |
| Priority Level: | Not reported |
| Operable Unit: | SITEWIDE |
| Primary Responsibility: | Federal Enforcement |
| Planning Status: | Primary |
| Urgency Indicator: | Not reported |
| Action Anomaly: | Not reported |

For detailed financial records, contact EDR for a Site Report.:

| | |
|---|---|
| Action Code: | 002 |
| Action: | UNILATERAL ADMIN ORDER |
| Date Started: | / / |
| Date Completed: | 09/30/97 |
| Priority Level: | Not reported |
| Operable Unit: | SITEWIDE |
| Primary Responsibility: | Federal Enforcement |
| Planning Status: | Not reported |
| Urgency Indicator: | Not reported |
| Action Anomaly: | Not reported |

For detailed financial records, contact EDR for a Site Report.:

| | |
|---|---|
| Action Code: | 001 |
| Action: | PROSPECTIVE PURCHASER AGREEMENT ASSESSMENT |
| Date Started: | 11/30/97 |
| Date Completed: | 12/02/99 |
| Priority Level: | PPA Signed |
| Operable Unit: | GLENDALE SOUTH(TO ROD)&COMBINE |
| Primary Responsibility: | Federal Enforcement |
| Planning Status: | Not reported |
| Urgency Indicator: | Not reported |
| Action Anomaly: | Not reported |

For detailed financial records, contact EDR for a Site Report.:

| | |
|---|---|
| Action Code: | 001 |

**SAN FERNANDO VALLEY (AREA 2) (Continued)** **1000710134**

| | |
|---|---|
| Action: | Lodged By DOJ |
| Date Started: | / / |
| Date Completed: | 05/17/00 |
| Priority Level: | Not reported |
| Operable Unit: | SITEWIDE |
| Primary Responsibility: | Federal Enforcement |
| Planning Status: | Not reported |
| Urgency Indicator: | Not reported |
| Action Anomaly: | Not reported |

For detailed financial records, contact EDR for a Site Report.:

| | |
|---|---|
| Action Code: | 002 |
| Action: | ADMINISTRATIVE ORDER ON CONSENT |
| Date Started: | / / |
| Date Completed: | 06/07/00 |
| Priority Level: | Not reported |
| Operable Unit: | GLENDALE SOUTH(TO ROD)&COMBINE |
| Primary Responsibility: | Federal Enforcement |
| Planning Status: | Not reported |
| Urgency Indicator: | Not reported |
| Action Anomaly: | Not reported |

For detailed financial records, contact EDR for a Site Report.:

| | |
|---|---|
| Action Code: | 001 |
| Action: | SECTION 107 LITIGATION |
| Date Started: | 03/04/97 |
| Date Completed: | 08/02/00 |
| Priority Level: | Not reported |
| Operable Unit: | SITEWIDE |
| Primary Responsibility: | Federal Enforcement |
| Planning Status: | Not reported |
| Urgency Indicator: | Not reported |
| Action Anomaly: | Not reported |

For detailed financial records, contact EDR for a Site Report.:

| | |
|---|---|
| Action Code: | 001 |
| Action: | CONSENT DECREE |
| Date Started: | 03/30/00 |
| Date Completed: | 08/02/00 |
| Priority Level: | Not reported |
| Operable Unit: | SITEWIDE |
| Primary Responsibility: | Federal Enforcement |
| Planning Status: | Primary |
| Urgency Indicator: | Not reported |
| Action Anomaly: | Not reported |

For detailed financial records, contact EDR for a Site Report.:

| | |
|---|---|
| Action Code: | 001 |
| Action: | PREPARATION OF COST DOCUMENT PACKAGE |
| Date Started: | 06/30/00 |
| Date Completed: | 09/30/00 |
| Priority Level: | Not reported |

**SAN FERNANDO VALLEY (AREA 2) (Continued)** **1000710134**

Operable Unit: SITEWIDE
Primary Responsibility: Federal Enforcement
Planning Status: Primary
Urgency Indicator: Not reported
Action Anomaly: Not reported

For detailed financial records, contact EDR for a Site Report.:

Action Code: 002
Action: PROSPECTIVE PURCHASER AGREEMENT ASSESSMENT
Date Started: 11/30/00
Date Completed: 12/22/00
Priority Level: PPA Signed
Operable Unit: GLENDALE SOUTH(TO ROD)&COMBINE
Primary Responsibility: Federal Enforcement
Planning Status: Not reported
Urgency Indicator: Not reported
Action Anomaly: Not reported

For detailed financial records, contact EDR for a Site Report.:

Action Code: 003
Action: ADMINISTRATIVE ORDER ON CONSENT
Date Started: / /
Date Completed: 07/23/01
Priority Level: Not reported
Operable Unit: GLENDALE SOUTH(TO ROD)&COMBINE
Primary Responsibility: Federal Enforcement
Planning Status: Not reported
Urgency Indicator: Not reported
Action Anomaly: Not reported

For detailed financial records, contact EDR for a Site Report.:

Action Code: 002
Action: POTENTIALLY RESPONSIBLE PARTY REMEDIAL ACTION
Date Started: 10/17/97
Date Completed: 09/30/02
Priority Level: Interim RA Report
Operable Unit: GLENDALE SOUTH(TO ROD)&COMBINE
Primary Responsibility: Responsible Party
Planning Status: Primary
Urgency Indicator: Long Term Action
Action Anomaly: Not reported

For detailed financial records, contact EDR for a Site Report.:

Action Code: 004
Action: ADMINISTRATIVE ORDER ON CONSENT
Date Started: / /
Date Completed: 06/29/06
Priority Level: Not reported
Operable Unit: SITEWIDE
Primary Responsibility: Federal Enforcement
Planning Status: Not reported
Urgency Indicator: Not reported
Action Anomaly: Not reported

**SAN FERNANDO VALLEY (AREA 2) (Continued)** **1000710134**

For detailed financial records, contact EDR for a Site Report.:

| | |
|---|---|
| Action Code: | 014 |
| Action: | Notice Letters Issued |
| Date Started: | / / |
| Date Completed: | 11/07/07 |
| Priority Level: | Not reported |
| Operable Unit: | SITEWIDE CHROMIUM |
| Primary Responsibility: | Federal Enforcement |
| Planning Status: | Not reported |
| Urgency Indicator: | Not reported |
| Action Anomaly: | Not reported |

For detailed financial records, contact EDR for a Site Report.:

| | |
|---|---|
| Action Code: | 010 |
| Action: | Notice Letters Issued |
| Date Started: | / / |
| Date Completed: | 11/07/07 |
| Priority Level: | Not reported |
| Operable Unit: | SITEWIDE CHROMIUM |
| Primary Responsibility: | Federal Enforcement |
| Planning Status: | Not reported |
| Urgency Indicator: | Not reported |
| Action Anomaly: | Not reported |

For detailed financial records, contact EDR for a Site Report.:

| | |
|---|---|
| Action Code: | 011 |
| Action: | Notice Letters Issued |
| Date Started: | / / |
| Date Completed: | 11/17/07 |
| Priority Level: | Not reported |
| Operable Unit: | SITEWIDE CHROMIUM |
| Primary Responsibility: | Federal Enforcement |
| Planning Status: | Not reported |
| Urgency Indicator: | Not reported |
| Action Anomaly: | Not reported |

For detailed financial records, contact EDR for a Site Report.:

| | |
|---|---|
| Action Code: | 013 |
| Action: | Notice Letters Issued |
| Date Started: | / / |
| Date Completed: | 11/17/07 |
| Priority Level: | Not reported |
| Operable Unit: | SITEWIDE CHROMIUM |
| Primary Responsibility: | Federal Enforcement |
| Planning Status: | Not reported |
| Urgency Indicator: | Not reported |
| Action Anomaly: | Not reported |

For detailed financial records, contact EDR for a Site Report.:

**SAN FERNANDO VALLEY (AREA 2) (Continued)** **1000710134**

| | |
|---|---|
| Action Code: | 009 |
| Action: | Notice Letters Issued |
| Date Started: | / / |
| Date Completed: | 11/19/07 |
| Priority Level: | Not reported |
| Operable Unit: | SITEWIDE CHROMIUM |
| Primary Responsibility: | Federal Enforcement |
| Planning Status: | Not reported |
| Urgency Indicator: | Not reported |
| Action Anomaly: | Not reported |

For detailed financial records, contact EDR for a Site Report.:

| | |
|---|---|
| Action Code: | 005 |
| Action: | Notice Letters Issued |
| Date Started: | / / |
| Date Completed: | 11/19/07 |
| Priority Level: | Not reported |
| Operable Unit: | SITEWIDE CHROMIUM |
| Primary Responsibility: | Federal Enforcement |
| Planning Status: | Not reported |
| Urgency Indicator: | Not reported |
| Action Anomaly: | Not reported |

For detailed financial records, contact EDR for a Site Report.:

| | |
|---|---|
| Action Code: | 008 |
| Action: | Notice Letters Issued |
| Date Started: | / / |
| Date Completed: | 11/19/07 |
| Priority Level: | Not reported |
| Operable Unit: | SITEWIDE CHROMIUM |
| Primary Responsibility: | Federal Enforcement |
| Planning Status: | Not reported |
| Urgency Indicator: | Not reported |
| Action Anomaly: | Not reported |

For detailed financial records, contact EDR for a Site Report.:

| | |
|---|---|
| Action Code: | 004 |
| Action: | Notice Letters Issued |
| Date Started: | / / |
| Date Completed: | 11/19/07 |
| Priority Level: | Not reported |
| Operable Unit: | SITEWIDE CHROMIUM |
| Primary Responsibility: | Federal Enforcement |
| Planning Status: | Not reported |
| Urgency Indicator: | Not reported |
| Action Anomaly: | Not reported |

For detailed financial records, contact EDR for a Site Report.:

| | |
|---|---|
| Action Code: | 007 |
| Action: | Notice Letters Issued |
| Date Started: | / / |

**SAN FERNANDO VALLEY (AREA 2) (Continued)** **1000710134**

| | |
|---|---|
| Date Completed: | 11/20/07 |
| Priority Level: | Not reported |
| Operable Unit: | SITEWIDE CHROMIUM |
| Primary Responsibility: | Federal Enforcement |
| Planning Status: | Not reported |
| Urgency Indicator: | Not reported |
| Action Anomaly: | Not reported |

For detailed financial records, contact EDR for a Site Report.:

| | |
|---|---|
| Action Code: | 012 |
| Action: | Notice Letters Issued |
| Date Started: | / / |
| Date Completed: | 11/20/07 |
| Priority Level: | Not reported |
| Operable Unit: | SITEWIDE CHROMIUM |
| Primary Responsibility: | Federal Enforcement |
| Planning Status: | Not reported |
| Urgency Indicator: | Not reported |
| Action Anomaly: | Not reported |

For detailed financial records, contact EDR for a Site Report.:

| | |
|---|---|
| Action Code: | 006 |
| Action: | Notice Letters Issued |
| Date Started: | / / |
| Date Completed: | 11/21/07 |
| Priority Level: | Not reported |
| Operable Unit: | SITEWIDE CHROMIUM |
| Primary Responsibility: | Federal Enforcement |
| Planning Status: | Not reported |
| Urgency Indicator: | Not reported |
| Action Anomaly: | Not reported |

For detailed financial records, contact EDR for a Site Report.:

| | |
|---|---|
| Action Code: | 003 |
| Action: | UNILATERAL ADMIN ORDER |
| Date Started: | / / |
| Date Completed: | 03/06/08 |
| Priority Level: | Not reported |
| Operable Unit: | SITEWIDE CHROMIUM |
| Primary Responsibility: | Federal Enforcement |
| Planning Status: | Not reported |
| Urgency Indicator: | Not reported |
| Action Anomaly: | Not reported |

For detailed financial records, contact EDR for a Site Report.:

| | |
|---|---|
| Action Code: | 005 |
| Action: | ADMINISTRATIVE ORDER ON CONSENT |
| Date Started: | / / |
| Date Completed: | 05/21/08 |
| Priority Level: | Not reported |
| Operable Unit: | SITEWIDE CHROMIUM |

**SAN FERNANDO VALLEY (AREA 2) (Continued)** **1000710134**

Primary Responsibility: Federal Enforcement
Planning Status: Not reported
Urgency Indicator: Not reported
Action Anomaly: Not reported

For detailed financial records, contact EDR for a Site Report.:

Action Code: 006
Action: ADMINISTRATIVE ORDER ON CONSENT
Date Started: / /
Date Completed: 08/18/08
Priority Level: Not reported
Operable Unit: SITEWIDE CHROMIUM
Primary Responsibility: Federal Enforcement
Planning Status: Not reported
Urgency Indicator: Not reported
Action Anomaly: Not reported

For detailed financial records, contact EDR for a Site Report.:

Action Code: 001
Action: FIVE-YEAR REVIEW
Date Started: 01/25/08
Date Completed: 09/30/08
Priority Level: Not reported
Operable Unit: SITEWIDE
Primary Responsibility: EPA Fund-Financed
Planning Status: Not reported
Urgency Indicator: Not reported
Action Anomaly: Not reported

For detailed financial records, contact EDR for a Site Report.:

Action Code: 015
Action: Notice Letters Issued
Date Started: / /
Date Completed: 11/07/08
Priority Level: Not reported
Operable Unit: SITEWIDE CHROMIUM
Primary Responsibility: Federal Enforcement
Planning Status: Not reported
Urgency Indicator: Not reported
Action Anomaly: Not reported

For detailed financial records, contact EDR for a Site Report.:

Action Code: 001
Action: CLAIM IN BANKRUPTCY PROCEEDING
Date Started: 07/02/09
Date Completed: 04/23/10
Priority Level: Not reported
Operable Unit: GLENDALE SOUTH(TO ROD)&COMBINE
Primary Responsibility: Federal Enforcement
Planning Status: Not reported
Urgency Indicator: Not reported
Action Anomaly: Not reported

**SAN FERNANDO VALLEY (AREA 2) (Continued)** **1000710134**

For detailed financial records, contact EDR for a Site Report.:

| | |
|---|---|
| Action Code: | 001 |
| Action: | REMOVAL |
| Date Started: | 02/23/10 |
| Date Completed: | 04/30/10 |
| Priority Level: | Stabilized |
| Operable Unit: | SITEWIDE CHROMIUM |
| Primary Responsibility: | EPA Fund-Financed |
| Planning Status: | Approved |
| Urgency Indicator: | Time Critical |
| Action Anomaly: | Not reported |

For detailed financial records, contact EDR for a Site Report.:

| | |
|---|---|
| Action Code: | 002 |
| Action: | REMOVAL ASSESSMENT |
| Date Started: | 02/23/10 |
| Date Completed: | 04/30/10 |
| Priority Level: | Not reported |
| Operable Unit: | SITEWIDE CHROMIUM |
| Primary Responsibility: | EPA Fund-Financed |
| Planning Status: | Not reported |
| Urgency Indicator: | Not reported |
| Action Anomaly: | Not reported |

For detailed financial records, contact EDR for a Site Report.:

| | |
|---|---|
| Action Code: | 007 |
| Action: | ADMINISTRATIVE ORDER ON CONSENT |
| Date Started: | / / |
| Date Completed: | 02/28/11 |
| Priority Level: | Not reported |
| Operable Unit: | SITEWIDE CHROMIUM |
| Primary Responsibility: | Federal Enforcement |
| Planning Status: | Not reported |
| Urgency Indicator: | Not reported |
| Action Anomaly: | Not reported |

For detailed financial records, contact EDR for a Site Report.:

| | |
|---|---|
| Action Code: | 002 |
| Action: | SECTION 107 LITIGATION |
| Date Started: | 05/21/09 |
| Date Completed: | 04/13/11 |
| Priority Level: | Not reported |
| Operable Unit: | SITEWIDE CHROMIUM |
| Primary Responsibility: | Federal Enforcement |
| Planning Status: | Not reported |
| Urgency Indicator: | Not reported |
| Action Anomaly: | Not reported |

For detailed financial records, contact EDR for a Site Report.:

| | |
|---|---|
| Action Code: | 005 |

**SAN FERNANDO VALLEY (AREA 2) (Continued)** **1000710134**

| | |
|---|---|
| Action: | CONSENT DECREE |
| Date Started: | / / |
| Date Completed: | 04/13/11 |
| Priority Level: | Not reported |
| Operable Unit: | SITEWIDE CHROMIUM |
| Primary Responsibility: | Federal Enforcement |
| Planning Status: | Not reported |
| Urgency Indicator: | Not reported |
| Action Anomaly: | Not reported |

For detailed financial records, contact EDR for a Site Report.:

| | |
|---|---|
| Action Code: | 008 |
| Action: | ADMINISTRATIVE ORDER ON CONSENT |
| Date Started: | / / |
| Date Completed: | 11/14/11 |
| Priority Level: | Not reported |
| Operable Unit: | SITEWIDE CHROMIUM |
| Primary Responsibility: | Federal Enforcement |
| Planning Status: | Not reported |
| Urgency Indicator: | Not reported |
| Action Anomaly: | Not reported |

For detailed financial records, contact EDR for a Site Report.:

| | |
|---|---|
| Action Code: | 002 |
| Action: | NEGOTIATION (GENERIC) |
| Date Started: | / / |
| Date Completed: | 11/14/11 |
| Priority Level: | Not reported |
| Operable Unit: | SITEWIDE CHROMIUM |
| Primary Responsibility: | Federal Enforcement |
| Planning Status: | Not reported |
| Urgency Indicator: | Not reported |
| Action Anomaly: | Not reported |

For detailed financial records, contact EDR for a Site Report.:

| | |
|---|---|
| Action Code: | 002 |
| Action: | COST RECOVERY NEGOTIATIONS |
| Date Started: | / / |
| Date Completed: | 12/20/11 |
| Priority Level: | Not reported |
| Operable Unit: | SITEWIDE CHROMIUM |
| Primary Responsibility: | Federal Enforcement |
| Planning Status: | Not reported |
| Urgency Indicator: | Not reported |
| Action Anomaly: | Not reported |

For detailed financial records, contact EDR for a Site Report.:

| | |
|---|---|
| Action Code: | 009 |
| Action: | ADMINISTRATIVE ORDER ON CONSENT |
| Date Started: | / / |
| Date Completed: | 12/20/11 |
| Priority Level: | Not reported |
| Operable Unit: | SITEWIDE CHROMIUM |

**SAN FERNANDO VALLEY (AREA 2) (Continued)** **1000710134**

Primary Responsibility: Federal Enforcement
Planning Status: Not reported
Urgency Indicator: Not reported
Action Anomaly: Not reported

For detailed financial records, contact EDR for a Site Report.:

Action Code: 010
Action: ADMINISTRATIVE ORDER ON CONSENT
Date Started: / /
Date Completed: 05/31/12
Priority Level: Not reported
Operable Unit: SITEWIDE CHROMIUM
Primary Responsibility: Federal Enforcement
Planning Status: Not reported
Urgency Indicator: Not reported
Action Anomaly: Not reported

For detailed financial records, contact EDR for a Site Report.:

Action Code: 001
Action: POTENTIALLY RESPONSIBLE PARTY FEASIBILITY STUDY
Date Started: 08/09/10
Date Completed: 07/01/13
Priority Level: Not reported
Operable Unit: GLENDALE SOUTH(TO ROD)&COMBINE
Primary Responsibility: Responsible Party
Planning Status: Not reported
Urgency Indicator: Not reported
Action Anomaly: Not reported

For detailed financial records, contact EDR for a Site Report.:

Action Code: 001
Action: COMBINED REMEDIAL INVESTIGATION/FEASIBILITY STUDY
Date Started: 08/16/85
Date Completed: / /
Priority Level: Not reported
Operable Unit: OVERALL SITE/AREAWIDE
Primary Responsibility: State, Fund Financed
Planning Status: Alternate
Urgency Indicator: Not reported
Action Anomaly: Phased Completion

For detailed financial records, contact EDR for a Site Report.:

Action Code: 001
Action: TECHNICAL ASSISTANCE
Date Started: 09/30/85
Date Completed: / /
Priority Level: Not reported
Operable Unit: OVERALL SITE/AREAWIDE
Primary Responsibility: EPA Fund-Financed
Planning Status: Primary
Urgency Indicator: Not reported

**SAN FERNANDO VALLEY (AREA 2) (Continued)** **1000710134**

Action Anomaly: Not reported

For detailed financial records, contact EDR for a Site Report.:

Action Code: 001
Action: POTENTIALLY RESPONSIBLE PARTY LONG-TERM RESPONSE ACTION
Date Started: 09/30/02
Date Completed: / /
Priority Level: Not reported
Operable Unit: GLENDALE SOUTH(TO ROD)&COMBINE
Primary Responsibility: Responsible Party
Planning Status: Not reported
Urgency Indicator: Not reported
Action Anomaly: Not reported

For detailed financial records, contact EDR for a Site Report.:

Action Code: 001
Action: POTENTIALLY RESPONSIBLE PARTY REMEDIAL INVESTIGATION/FEASIBILITY STUDY
Date Started: 04/08/08
Date Completed: / /
Priority Level: Not reported
Operable Unit: SITEWIDE CHROMIUM
Primary Responsibility: Responsible Party
Planning Status: Not reported
Urgency Indicator: Not reported
Action Anomaly: Not reported

For detailed financial records, contact EDR for a Site Report.:

Action Code: 001
Action: REMEDIAL INVESTIGATION
Date Started: 09/27/11
Date Completed: / /
Priority Level: Not reported
Operable Unit: SITEWIDE CHROMIUM
Primary Responsibility: EPA Fund-Financed
Planning Status: Not reported
Urgency Indicator: Not reported
Action Anomaly: Not reported

For detailed financial records, contact EDR for a Site Report.:

Action Code: 005
Action: POTENTIALLY RESPONSIBLE PARTY REMEDIAL ACTION
Date Started: 08/22/13
Date Completed: / /
Priority Level: Not reported
Operable Unit: GLENDALE SOUTH(TO ROD)&COMBINE
Primary Responsibility: Responsible Party
Planning Status: Not reported
Urgency Indicator: Not reported
Action Anomaly: Not reported

For detailed financial records, contact EDR for a Site Report.:

Federal Register Details:
Fed Register Date: 06/10/86

**SAN FERNANDO VALLEY (AREA 2) (Continued)** **1000710134**

Fed Register Volume: 51
Page Number: 21054

Fed Register Date: 10/15/84
Fed Register Volume: 49
Page Number: 40320

Click this hyperlink while viewing on your computer to access
2677 additional US CERCLIS Financial: record(s) in the EDR Site Report.

US ENG CONTROLS:
EPA ID: CAD980894901
Site ID: 0902252
Name: SAN FERNANDO VALLEY (AREA 2)
Address: CRYSTAL SPRINGS WELLFIELD AREA
GLENDALE, CA 91209
EPA Region: 09
County: LOS ANGELES
Event Code: Not reported
Actual Date: 06/30/1993
Contact Name: Not reported
Contact Phone and Ext: Not reported
Latitude: Not reported
Longitude: Not reported

Action ID: 002
Action Name: RECORD OF DECISION
Action Completion date: 06/18/1993
Operable Unit: 03
Contaminated Media : Groundwater
Engineering Control: Extraction
Contact Name: Not reported
Contact Phone and Ext: Not reported
Latitude: Not reported
Longitude: Not reported

Action ID: 002
Action Name: RECORD OF DECISION
Action Completion date: 06/18/1993
Operable Unit: 03
Contaminated Media : Groundwater
Engineering Control: Filtration
Contact Name: Not reported
Contact Phone and Ext: Not reported
Latitude: Not reported
Longitude: Not reported

Action ID: 002
Action Name: RECORD OF DECISION
Action Completion date: 06/18/1993
Operable Unit: 03
Contaminated Media : Groundwater
Engineering Control: Monitoring
Contact Name: Not reported
Contact Phone and Ext: Not reported
Latitude: Not reported

**SAN FERNANDO VALLEY (AREA 2) (Continued)** **1000710134**

Longitude: Not reported

Action ID: 002
Action Name: RECORD OF DECISION
Action Completion date: 06/18/1993
Operable Unit: 03
Contaminated Media : Groundwater
Engineering Control: Reuse as Drinking Water
Contact Name: Not reported
Contact Phone and Ext: Not reported
Latitude: Not reported
Longitude: Not reported

Action ID: 002
Action Name: RECORD OF DECISION
Action Completion date: 06/18/1993
Operable Unit: 03
Contaminated Media : Groundwater
Engineering Control: Treatment, (N.O.S.)
Contact Name: Not reported
Contact Phone and Ext: Not reported
Latitude: Not reported
Longitude: Not reported

Action ID: 003
Action Name: RECORD OF DECISION
Action Completion date: 06/18/1993
Operable Unit: 02
Contaminated Media : Groundwater
Engineering Control: Air Stripping
Contact Name: Not reported
Contact Phone and Ext: Not reported
Latitude: Not reported
Longitude: Not reported

Action ID: 003
Action Name: RECORD OF DECISION
Action Completion date: 06/18/1993
Operable Unit: 02
Contaminated Media : Groundwater
Engineering Control: Carbon Adsorption
Contact Name: Not reported
Contact Phone and Ext: Not reported
Latitude: Not reported
Longitude: Not reported

Action ID: 003
Action Name: RECORD OF DECISION
Action Completion date: 06/18/1993
Operable Unit: 02
Contaminated Media : Groundwater
Engineering Control: Discharge
Contact Name: Not reported
Contact Phone and Ext: Not reported
Latitude: Not reported
Longitude: Not reported

**SAN FERNANDO VALLEY (AREA 2) (Continued)** **1000710134**

Action ID: 003
Action Name: RECORD OF DECISION
Action Completion date: 06/18/1993
Operable Unit: 02
Contaminated Media : Groundwater
Engineering Control: Extraction
Contact Name: Not reported
Contact Phone and Ext: Not reported
Latitude: Not reported
Longitude: Not reported

Action ID: 003
Action Name: RECORD OF DECISION
Action Completion date: 06/18/1993
Operable Unit: 02
Contaminated Media : Groundwater
Engineering Control: Filtration
Contact Name: Not reported
Contact Phone and Ext: Not reported
Latitude: Not reported
Longitude: Not reported

Action ID: 003
Action Name: RECORD OF DECISION
Action Completion date: 06/18/1993
Operable Unit: 02
Contaminated Media : Groundwater
Engineering Control: Liquid Phase Carbon Adsorption
Contact Name: Not reported
Contact Phone and Ext: Not reported
Latitude: Not reported
Longitude: Not reported

ENVIROSTOR:
Facility ID: 19990012
Status: Active
Status Date: 01/01/1984
Site Code: 300288
Site Type: Federal Superfund
Site Type Detailed: State Response or NPL
Acres: 7229
NPL: YES
Regulatory Agencies: SMBRP, RWQCB 4 - Los Angeles, US EPA
Lead Agency: US EPA
Program Manager: Tedd Yargeau
Supervisor: Javier Hinojosa
Division Branch: Cleanup Chatsworth
Assembly: 43
Senate: 25
Special Program: Not reported
Restricted Use: NO
Site Mgmt Req: NONE SPECIFIED
Funding: Responsible Party
Latitude: 34.1575
Longitude: -118.2847
APN: NONE SPECIFIED

**SAN FERNANDO VALLEY (AREA 2) (Continued)** **1000710134**

Past Use: AEROSPACE MANUFACTURING/MAINTENANCE, MANUFACTURING - INDUSTRIAL MACHINERY, METAL FINISHING, METAL PLATING - CHROME, METAL PLATING - OTHER, RESEARCH - AEROSPACE
Potential COC: Tetrachloroethylene (PCE 1,1,1-Trichloroethane (TCA Trichloroethylene (TCE Chromium III Chromium VI
Confirmed COC: Tetrachloroethylene (PCE 1,1,1-Trichloroethane (TCA Trichloroethylene (TCE Chromium III Chromium VI
Potential Description: AQUI, SOIL
Alias Name: CRYSTAL SPRINGS AREA; GLENDALE OU
Alias Type: Alternate Name
Alias Name: SAN FERNANDO VALLEY GW BASIN AREA 2
Alias Type: Alternate Name
Alias Name: CAD980894901
Alias Type: CERCLIS ID
Alias Name: 110009267970
Alias Type: EPA (FRS #)
Alias Name: P31032
Alias Type: PCode
Alias Name: 300127
Alias Type: Project Code (Site Code)
Alias Name: 300287
Alias Type: Project Code (Site Code)
Alias Name: 300288
Alias Type: Project Code (Site Code)
Alias Name: 19990012
Alias Type: Envirostor ID Number

Completed Info:
Completed Area Name: PROJECT WIDE
Completed Sub Area Name: Not reported
Completed Document Type: Consent Order
Completed Date: 03/30/1994
Comments: An Administrative Order on Consent is signed by U.S. EPA and PRPs to conduct the Remedial Design of the groundwater extraction, treatment, disinfection, blending, and distribution facilities necessary to implement the Glendale North and South RODs.

Completed Area Name: PROJECT WIDE
Completed Sub Area Name: Not reported
Completed Document Type: Remedy Constructed: Operating Properly & Successfully
Completed Date: 04/23/2001
Comments: City of Glendale assumes operation of the Glendale Water Treatment Plant.

Completed Area Name: PROJECT WIDE
Completed Sub Area Name: Not reported
Completed Document Type: Design/Implementation Workplan
Completed Date: 11/11/1996
Comments: Not reported

Completed Area Name: PROJECT WIDE
Completed Sub Area Name: Not reported
Completed Document Type: Remedial Action Plan
Completed Date: 06/18/1993
Comments: Not reported

Completed Area Name: PROJECT WIDE
Completed Sub Area Name: Not reported

**SAN FERNANDO VALLEY (AREA 2) (Continued)** **1000710134**

Completed Document Type: Remedial Investigation / Feasibility Study
Completed Date: 08/30/1992
Comments: Not reported

Completed Area Name: PROJECT WIDE
Completed Sub Area Name: Not reported
Completed Document Type: Remedial Investigation / Feasibility Study
Completed Date: 04/30/1992
Comments: Not reported

Completed Area Name: PROJECT WIDE
Completed Sub Area Name: Not reported
Completed Document Type: Remedial Investigation / Feasibility Study
Completed Date: 01/30/1992
Comments: Not reported

Completed Area Name: PROJECT WIDE
Completed Sub Area Name: Not reported
Completed Document Type: Public Participation Plan / Community Relations Plan
Completed Date: 04/30/1990
Comments: Not reported

Future Area Name: Not reported
Future Sub Area Name: Not reported
Future Document Type: Not reported
Future Due Date: Not reported
Schedule Area Name: Not reported
Schedule Sub Area Name: Not reported
Schedule Document Type: Not reported
Schedule Due Date: Not reported
Schedule Revised Date: Not reported

Calsite:
Region: GLENDALE
Facility ID: 19990012
Facility Type: NPJF
Type: NPL SITE, JOINT STATE/FEDERAL-FUNDED
Branch: SA
Branch Name: SO CAL - GLENDALE
File Name: Not reported
State Senate District: 01011984
Status: ANNUAL WORKPLAN (AWP) - ACTIVE SITE
Status Name: ANNUAL WORKPLAN - ACTIVE SITE
Lead Agency: ENVIRONMENTAL PROTECTION AGENCY
NPL: Listed
SIC Code: 99
SIC Name: NONCLASSIFIABLE ESTABLISHMENTS
Access: Not reported
Cortese: Not reported
Hazardous Ranking Score: Not reported
Date Site Hazard Ranked: Not reported
Groundwater Contamination: Confirmed
Staff Member Responsible for Site: TYARGEAU
Supervisor Responsible for Site: Not reported
Region Water Control Board: LA
Region Water Control Board Name: LOS ANGELES
Lat/Long Direction: Not reported

**SAN FERNANDO VALLEY (AREA 2) (Continued)** **1000710134**

| | |
|---|---|
| Lat/Long (dms): | 0 0 0 / 0 0 0 |
| Lat/long Method: | Not reported |
| Lat/Long Description: | Not reported |
| State Assembly District Code: | 43 |
| State Senate District Code: | 21 |
| Facility ID: | 19990012 |
| Activity: | PPP |
| Activity Name: | PUBLIC PARTICIPATION PLAN |
| AWP Code: | Not reported |
| Proposed Budget: | 0 |
| AWP Completion Date: | Not reported |
| Revised Due Date: | Not reported |
| Comments Date: | 04301990 |
| Est Person-Yrs to complete: | 0 |
| Estimated Size: | Not reported |
| Request to Delete Activity: | Not reported |
| Activity Status: | AWP |
| Definition of Status: | ANNUAL WORKPLAN - ACTIVE SITE |
| Liquids Removed (Gals): | 0 |
| Liquids Treated (Gals): | 0 |
| Action Included Capping: | Not reported |
| Well Decommissioned: | Not reported |
| Action Included Fencing: | Not reported |
| Removal Action Certification: | Not reported |
| Activity Comments: | Not reported |
| For Commercial Reuse: | 0 |
| For Industrial Reuse: | 0 |
| For Residential Reuse: | 0 |
| Unknown Type: | 0 |
| Facility ID: | 19990012 |
| Activity: | RIFS |
| Activity Name: | REMEDIAL INVESTIGATION / FEASIBILITY STUDY |
| AWP Code: | GLNOU |
| Proposed Budget: | 0 |
| AWP Completion Date: | Not reported |
| Revised Due Date: | Not reported |
| Comments Date: | 01301992 |
| Est Person-Yrs to complete: | 0 |
| Estimated Size: | Not reported |
| Request to Delete Activity: | Not reported |
| Activity Status: | AWP |
| Definition of Status: | ANNUAL WORKPLAN - ACTIVE SITE |
| Liquids Removed (Gals): | 0 |
| Liquids Treated (Gals): | 0 |
| Action Included Capping: | Not reported |
| Well Decommissioned: | Not reported |
| Action Included Fencing: | Not reported |
| Removal Action Certification: | Not reported |
| Activity Comments: | Not reported |
| For Commercial Reuse: | 0 |
| For Industrial Reuse: | 0 |
| For Residential Reuse: | 0 |
| Unknown Type: | 0 |
| Facility ID: | 19990012 |
| Activity: | RIFS |
| Activity Name: | REMEDIAL INVESTIGATION / FEASIBILITY STUDY |
| AWP Code: | Not reported |

**SAN FERNANDO VALLEY (AREA 2) (Continued)** **1000710134**

| | |
|---|---|
| Proposed Budget: | 0 |
| AWP Completion Date: | Not reported |
| Revised Due Date: | Not reported |
| Comments Date: | 04301992 |
| Est Person-Yrs to complete: | 0 |
| Estimated Size: | Not reported |
| Request to Delete Activity: | Not reported |
| Activity Status: | AWP |
| Definition of Status: | ANNUAL WORKPLAN - ACTIVE SITE |
| Liquids Removed (Gals): | 0 |
| Liquids Treated (Gals): | 0 |
| Action Included Capping: | Not reported |
| Well Decommissioned: | Not reported |
| Action Included Fencing: | Not reported |
| Removal Action Certification: | Not reported |
| Activity Comments: | Not reported |
| For Commercial Reuse: | 0 |
| For Industrial Reuse: | 0 |
| For Residential Reuse: | 0 |
| Unknown Type: | 0 |
| Facility ID: | 19990012 |
| Activity: | RIFS |
| Activity Name: | REMEDIAL INVESTIGATION / FEASIBILITY STUDY |
| AWP Code: | SOUTH |
| Proposed Budget: | 0 |
| AWP Completion Date: | Not reported |
| Revised Due Date: | Not reported |
| Comments Date: | 08301992 |
| Est Person-Yrs to complete: | 0 |
| Estimated Size: | Not reported |
| Request to Delete Activity: | Not reported |
| Activity Status: | AWP |
| Definition of Status: | ANNUAL WORKPLAN - ACTIVE SITE |
| Liquids Removed (Gals): | 0 |
| Liquids Treated (Gals): | 0 |
| Action Included Capping: | Not reported |
| Well Decommissioned: | Not reported |
| Action Included Fencing: | Not reported |
| Removal Action Certification: | Not reported |
| Activity Comments: | Not reported |
| For Commercial Reuse: | 0 |
| For Industrial Reuse: | 0 |
| For Residential Reuse: | 0 |
| Unknown Type: | 0 |
| Facility ID: | 19990012 |
| Activity: | RAP |
| Activity Name: | REMEDIAL ACTION PLAN / RECORD OF DECISION |
| AWP Code: | GLNOU |
| Proposed Budget: | 0 |
| AWP Completion Date: | Not reported |
| Revised Due Date: | Not reported |
| Comments Date: | 06181993 |
| Est Person-Yrs to complete: | 0 |
| Estimated Size: | Not reported |
| Request to Delete Activity: | Not reported |
| Activity Status: | AWP |
| Definition of Status: | ANNUAL WORKPLAN - ACTIVE SITE |

**SAN FERNANDO VALLEY (AREA 2) (Continued)** **1000710134**

| | |
|---|---|
| Liquids Removed (Gals): | 0 |
| Liquids Treated (Gals): | 0 |
| Action Included Capping: | Not reported |
| Well Decommissioned: | Not reported |
| Action Included Fencing: | Not reported |
| Removal Action Certification: | Not reported |
| Activity Comments: | Not reported |
| For Commercial Reuse: | 0 |
| For Industrial Reuse: | 0 |
| For Residential Reuse: | 0 |
| Unknown Type: | 0 |
| Facility ID: | 19990012 |
| Activity: | RAP |
| Activity Name: | REMEDIAL ACTION PLAN / RECORD OF DECISION |
| AWP Code: | GLSOU |
| Proposed Budget: | 0 |
| AWP Completion Date: | Not reported |
| Revised Due Date: | Not reported |
| Comments Date: | 06181993 |
| Est Person-Yrs to complete: | 0 |
| Estimated Size: | Not reported |
| Request to Delete Activity: | Not reported |
| Activity Status: | AWP |
| Definition of Status: | ANNUAL WORKPLAN - ACTIVE SITE |
| Liquids Removed (Gals): | 0 |
| Liquids Treated (Gals): | 0 |
| Action Included Capping: | Not reported |
| Well Decommissioned: | Not reported |
| Action Included Fencing: | Not reported |
| Removal Action Certification: | Not reported |
| Activity Comments: | Not reported |
| For Commercial Reuse: | 0 |
| For Industrial Reuse: | 0 |
| For Residential Reuse: | 0 |
| Unknown Type: | 0 |
| Facility ID: | 19990012 |
| Activity: | ORDER |
| Activity Name: | I/SE, IORSE, FFA, FFSRA, VCA, EA |
| AWP Code: | AOC |
| Proposed Budget: | 0 |
| AWP Completion Date: | Not reported |
| Revised Due Date: | Not reported |
| Comments Date: | 03301994 |
| Est Person-Yrs to complete: | 0 |
| Estimated Size: | Not reported |
| Request to Delete Activity: | Not reported |
| Activity Status: | AWP |
| Definition of Status: | ANNUAL WORKPLAN - ACTIVE SITE |
| Liquids Removed (Gals): | 0 |
| Liquids Treated (Gals): | 0 |
| Action Included Capping: | Not reported |
| Well Decommissioned: | Not reported |
| Action Included Fencing: | Not reported |
| Removal Action Certification: | Not reported |
| Activity Comments: | Not reported |
| For Commercial Reuse: | 0 |
| For Industrial Reuse: | 0 |

**SAN FERNANDO VALLEY (AREA 2) (Continued)** **1000710134**

| | |
|---|---|
| For Residential Reuse: | 0 |
| Unknown Type: | 0 |
| Facility ID: | 19990012 |
| Activity: | DES |
| Activity Name: | DESIGN |
| AWP Code: | GLOU |
| Proposed Budget: | 0 |
| AWP Completion Date: | Not reported |
| Revised Due Date: | Not reported |
| Comments Date: | 11111996 |
| Est Person-Yrs to complete: | 0 |
| Estimated Size: | Not reported |
| Request to Delete Activity: | Not reported |
| Activity Status: | AWP |
| Definition of Status: | ANNUAL WORKPLAN - ACTIVE SITE |
| Liquids Removed (Gals): | 0 |
| Liquids Treated (Gals): | 0 |
| Action Included Capping: | Not reported |
| Well Decommissioned: | Not reported |
| Action Included Fencing: | Not reported |
| Removal Action Certification: | Not reported |
| Activity Comments: | Not reported |
| For Commercial Reuse: | 0 |
| For Industrial Reuse: | 0 |
| For Residential Reuse: | 0 |
| Unknown Type: | 0 |
| Facility ID: | 19990012 |
| Activity: | RMDL |
| Activity Name: | REMEDIAL ACTION (RAP REQUIRED) |
| AWP Code: | GLOU |
| Proposed Budget: | 0 |
| AWP Completion Date: | Not reported |
| Revised Due Date: | Not reported |
| Comments Date: | 04232001 |
| Est Person-Yrs to complete: | 0 |
| Estimated Size: | Not reported |
| Request to Delete Activity: | Not reported |
| Activity Status: | AWP |
| Definition of Status: | ANNUAL WORKPLAN - ACTIVE SITE |
| Liquids Removed (Gals): | 0 |
| Liquids Treated (Gals): | 0 |
| Action Included Capping: | Not reported |
| Well Decommissioned: | Not reported |
| Action Included Fencing: | Not reported |
| Removal Action Certification: | N |
| Activity Comments: | Not reported |
| For Commercial Reuse: | 0 |
| For Industrial Reuse: | 0 |
| For Residential Reuse: | 0 |
| Unknown Type: | 0 |
| Facility ID: | 19990012 |
| Activity: | OM |
| Activity Name: | OPERATION & MAINTENANCE |
| AWP Code: | GLOU |
| Proposed Budget: | 0 |
| AWP Completion Date: | 09302020 |
| Revised Due Date: | Not reported |

**SAN FERNANDO VALLEY (AREA 2) (Continued)** **1000710134**

| | |
|---|---|
| Comments Date: | Not reported |
| Est Person-Yrs to complete: | 0 |
| Estimated Size: | Not reported |
| Request to Delete Activity: | Not reported |
| Activity Status: | AWP |
| Definition of Status: | ANNUAL WORKPLAN - ACTIVE SITE |
| Liquids Removed (Gals): | 0 |
| Liquids Treated (Gals): | 0 |
| Action Included Capping: | Not reported |
| Well Decommissioned: | Not reported |
| Action Included Fencing: | Not reported |
| Removal Action Certification: | Not reported |
| Activity Comments: | Not reported |
| For Commercial Reuse: | 0 |
| For Industrial Reuse: | 0 |
| For Residential Reuse: | 0 |
| Unknown Type: | 0 |
| Alternate Address: | CRYSTAL SPRINGS AREA |
| Alternate City,St,Zip: | BURBANK, CA 91504 |
| Alternate Address: | CITIES INCLUDE GLENDALE AND LOS ANGELES |
| Alternate City,St,Zip: | Not reported |
| Alternate Address: | CRYSTAL SPRINGS WELLFIELD AREA |
| Alternate City,St,Zip: | GLENDALE, CA 91209 |
| Alternate Address: | GLENDALE |
| Alternate City,St,Zip: | GLENDALE, CA 91201 |

Background Info:

essentially been put out of commission.
Exposure of receptors to contaminants can possibly occur through ingestion of contaminated drinking water, inhalation of vapors released from the contaminated water as in taking showers, and dermal exposure as in washing or bathing. However, with the strict regulatory control over water quality by the State's Department of Health, Office of Drinking Water (ODW), the RWQCB, and other agencies, residents are assured that the water they consume is safe and that no one is drinking water which contains concentrations of contaminants above regulatory standards.
Federal, state, and local agencies have been conducting investigations and cleanup of contaminated groundwater in the SFVGWB since contamination was discovered in 1979. These activities involve measuring the extent of contamination, developing and implementing cleanup remedies, and identifying responsible parties. EPA provided oversight of the basinwide Remedial Investigation (RI) of groundwater contamination conducted by the Los Angeles Department of Water and Power (LADWP) The RI objectives were to collect lithological and water quality data and information regarding basin operations for the eastern SF and Verdugo basins; develop a regional characterization of geology, hydrology, hydrogeology and the nature and extent of groundwater contamination within the eastern & Verdugo basins; study fate and transport of compounds in the environment; identify Applicable or Relevant and Appropriate Requirements (ARAR's); and evaluate the potential risk to human health and the environment.
The Remedial Investigation of the SFVGWB was divided into two phases:
Phase I activities have included vertical profile borings and installation of monitoring wells to obtain preliminary contamination information. Monitoring wells have been installed

**SAN FERNANDO VALLEY (AREA 2) (Continued)** **1000710134**

as follows: 34 in North Hollywood (Area #1); 29 in Crystal Springs (Area #2); 7 in Verdugo (Area #3); and 17 in Pollock (Area #4).
Information obtained from Phase I investigation activities identified the need for several operable units. Operable Unit is a federal term which is similar to the State's definition of a removal action.
Phase II activities consist of basinwide remedial investigation conducted by the LADWP.
Remedial Actions (RAs):
North Hollywood (Area #1) -- Two RAs were identified for Area #1, the North Hollywood OU and the Burbank OU.
A Record of Decision (ROD) for the North Hollywood RA was signed in September 1987, selecting groundwater extraction and treatment (air stripping) of 2,000 gallons per minute (gpm) of contaminated water as an interim remedy. This RA was constructed with funding from EPA and the State and has been treating contaminated groundwater since March 1989. This facility is located at 11845 Vose Street in the N. Hollywood section of Los Angeles.
A ROD for the Burbank OU was signed in June 1989, again selecting groundwater extraction and treatment of about 12,000 gpm of contaminated water. Phase I of the Burbank OU began operations in January 1996 treating groundwater at a rate of 6,000 gpm. Phase II began operations in May 1998 adding an additional 3,000 gpm to the Burbank OU's treatment capacity.
Crystal Springs (Area #2) -- LADWP has completed a focused RI/FS for this proposed RA. The Glendale OU was separated into a North OU and a South OU based on the amount of contamination and the facilities contributing to the GW contamination. A ROD for each OU was signed on June 18, 1993 designating groundwater extraction and treatment as the interim remedy. The PRPs formed a group and combined the RA efforts for each OU into one document. The selected alternative is GW extraction and treatment. The Glendale OU began operations in September 2000.
Verdugo and Pollock (Areas #3 and #4) --
Currently no RAs have been identified for Area #3 or for Area #4. In October 2003, US EPA propsed No Remedial Action Verdugo Basin (Area #3).
Another contaminant of concern, hexavalent chromium, has been identified in the San Fernando Valey Groundwater Basin. EPA and the RWQCB are currently identifyig potential sources of contamination and pursuing PRPs that may be responsible for contaminating groundwater. As these PRPs are identified, individual site investigations and mitigation activities will be pursued. Enforceable agreements and orders will be implemented at numerous specific potential source sites within the Basin by RWQCB and DTSC.
The San Fernando Valley Ground Water Basin (SFVGWB) is located within the Upper Los Angeles River Area and consists of the eastern portion of the San Fernando Valley and the entire Verdugo Basin. The SFVGWB encompasses approximately 112,000 acres of alluvial valley fill deposits and provides enough water to serve approximately 600,000 residents. The Basin is bounded on the north and the northwest by the Santa Susana Mountains, on the

**SAN FERNANDO VALLEY (AREA 2) (Continued)** **1000710134**

northeast by the San Gabriel Mountains, on the west by the Simi Hills and on the south by the Santa Monica Mountains.
The San Fernando Valley Study area includes four National Priorities List (NPL) sites. They are:
Area #1 - North Hollywood NPL site covers 9336 acres in the eastern part of the San Fernando Valley. The site has been divided into the North Hollywood Operable Unit (OU) and the Burbank OU.
Area #2 - Crystal Springs NPL Site covers 3975 acres south-east of the North Hollywood NPL site and is located in the cities of Glendale and Los Angeles.
Area #3 - Verdugo NPL Site covers 2673 acres in the eastern part of the San Fernando Valley and is located in and adjacent to La Crescenta in the Verdugo Mountains.
Area #4 - Pollock NPL Site covers 1653 acres in the southeastern part of the San Fernando Valley and is located in and adjacent to the cities of Los Angeles and Glendale.
Groundwater contamination in the SFVGWB is linked to prewar, postwar, and current industrialization in the San Fernando Valley.
The primary contaminants of concern are volatile organic compounds (VOCs), trichloroethylene (TCE), and tetracholoethylene (PCE), which have been and/or are being used in many San Fernando Valley industries, such aeronautical, automotive, dry cleaning, and metal plating. These solvents have found their way to the groundwater basin as a result of both past and improper use, storage, and disposal practices. The SFVGWB Superfund sites, added to the NPL in 1986, are areas where groundwater from wells have been found to contain VOCs above the state and federal drinking water standards. Groundwater contamination at numerous wells have been so severe with TCE and PCE that these wells have

Comments Date: 03301994
Comments: An Administrative Order on Consent is signed by U.S. EPA and PRPs
Comments Date: 03301994
Comments: to conduct the Remedial Design of the groundwater extraction,
Comments Date: 01011984
Comments: Groundwater contaminated with TCE and PCE. The site covers 7229
Comments Date: 01011984
Comments: acres in the Crystal Springs area.
Comments Date: 01022001
Comments: City of Glendale notifies US EPA that they will not accept the
Comments Date: 01022001
Comments: treated water from the Glendale Water Treatment Plant. They are
Comments Date: 01022001
Comments: requesting additional time to evaluate treatment options for
Comments Date: 01022001
Comments: hexavalent chromium. In addition, the City will submit a
Comments Date: 01022001
Comments: proposal to US EPA discussing the options available.
Comments Date: 03292001
Comments: City of Glendale submits proposal for operation of the Glendale
Comments Date: 03292001
Comments: Water Treatment Plant. Under the City's proposal, the two
Comments Date: 03292001
Comments: chromium-impacted wells will run at a reduced rate. The treated
Comments Date: 03292001

**SAN FERNANDO VALLEY (AREA 2) (Continued)** **1000710134**

Comments: water will still contain detectable amounts of hexavalent
Comments Date: 03292001
Comments: chromium and will continue to be discharged into the Los Angeles
Comments Date: 03292001
Comments: River. The City of Glendale is still pursuing treatment options
Comments Date: 03292001
Comments: to treat the water down to non-detect levels of hexavalent
Comments Date: 03292001
Comments: chromium.
Comments Date: 03301994
Comments: treatment, disinfection, blending, and distribution facilities
Comments Date: 03301994
Comments: necessary to implement the Glendale North and South RODs.
Comments Date: 04022001
Comments: US EPA accepts the City of Glendale's proposal to operate the
Comments Date: 04022001
Comments: treatment plant.
Comments Date: 04041997
Comments: The Final Remedial Design consists of a proposed Water Treatment
Comments Date: 04041997
Comments: Plant (WTP) located in the North OU that is designed to treat
Comments Date: 04041997
Comments: VOCs (primarily TCE and PCE). The groundwater will be pumped at
Comments Date: 04041997
Comments: a combined extraction flow rate of 5,000 gpm from 7 shallow
Comments Date: 04041997
Comments: wells and one deep well located in both the Glendale North and
Comments Date: 04041997
Comments: South OUs.
Comments Date: 04041997
Comments: Not reported
Comments Date: 04041997
Comments: At the proposed WTP, the affected groundwater will be pumped
Comments Date: 04041997
Comments: directly into two single-stage Packed Tower Aerators (PTAs)
Comments Date: 04041997
Comments: that are followed by liquid phase granular activated carbon
Comments Date: 04041997
Comments: (LPGAC) vessels, then disinfected. The water will then be
Comments Date: 04041997
Comments: ammoniated, mixed with low nitrate MWD blending water and
Comments Date: 04041997
Comments: discharged into the City or Glendale's potable water system.
Comments Date: 04041997
Comments: The off gasses from the PTAs will be treated through a vapor
Comments Date: 04041997
Comments: phase GAC system.
Comments Date: 04201995
Comments: The PRP group is preparing remedial design documents for review
Comments Date: 04201995
Comments: by the agencies. Glendale North OU and Glendale South OU PRPs
Comments Date: 04201995
Comments: submitting one document for the design of the remedy for both OUs
Comments Date: 04232001
Comments: City of Glendale assumes operation of the Glendale Water
Comments Date: 04232001
Comments: Treatment Plant.

**SAN FERNANDO VALLEY (AREA 2) (Continued)** **1000710134**

Comments Date: 08032000
Comments: City of Glendale receives the 97-005 permit from Department of
Comments Date: 08032000
Comments: Health Services.
Comments Date: 09202001
Comments: The treatment plant continues to operate with the City of
Comments Date: 09202001
Comments: Glendale taking all of the treated water.
Comments Date: 09252000
Comments: City of Glendale is scheduled to receive treated water from the
Comments Date: 09252000
Comments: Glendale Water Treatment Plant. The City notifies the US EPA
Comments Date: 09252000
Comments: that it will not accept the treated water due to the levels of
Comments Date: 09252000
Comments: hexavalent chromium present in the treated water. The City also
Comments Date: 09252000
Comments: requests for a 90-day extension from US EPA to accept the treated
Comments Date: 09252000
Comments: water.
Comments Date: 09272000
Comments: City of Glendale meets with US EPA to discuss their requests for
Comments Date: 09272000
Comments: delay and outlines what they intend on accomplishing during the
Comments Date: 09272000
Comments: 90-day extension. Their primary objective is to determine a
Comments Date: 09272000
Comments: treatment option to treat hexavalent chromiun down to non-detect
Comments Date: 09272000
Comments: levels.
Comments Date: 10122000
Comments: US EPA grants extension to City of Glendale until 1/2/2001.
Comments Date: 10122000
Comments: During this time the Glendale Water Treatment Plant will operate
Comments Date: 10122000
Comments: with the treated water being discharged directly into the
Comments Date: 10122000
Comments: Los Angeles River.
Comments Date: 10191999
Comments: Construction completed for both Glendale North and South Operable
Comments Date: 10191999
Comments: Units. The City is working on obtaining a permit from the
Comments Date: 10191999
Comments: Department of Health Services to operate the treatment facilities
ID Name: BEP DATABASE PCODE
ID Value: P31032
ID Name: CALSTARS CODE
ID Value: 300127
Alternate Name: SAN FERNANDO VALLEY GW BASIN AREA 2CRYSTAL SPRINGS AREA; GLENDALE OUSAN FERNANDO VALLEY (AREA 2)
Special Programs Code: MSCA
Special Programs Name: MULTI-SITE COOPERATIVE AGREEMENT

ROD:

Full-text of USEPA Record of Decision(s) is available from EDR.

**SAN FERNANDO VALLEY (AREA 2) (Continued)** **1000710134**

PRP:
PRP name:

A.G. LAYNE, INC.
A.G. LAYNE, INC.
ACCESS CONTROLS, INC
ACCESS CONTROLS, INC
ACCESS CONTROLS, INC.
ACCESS CONTROLS, INC.
ACCESS CONTROLS, INC.
ACCESS CONTROLS, INC.
ACME AEROSPACE, INC.
ADMIRAL CONTROLS, INC.
ADMIRAL CONTROLS, INC.
ADMIRAL CONTROLS, INC.
ADMIRAL CONTROLS, INC.
ALFONSO A. DARGENZIO TRUST
ALL METALS PROCESSING COMPANY
AMERICAN METASEAL COMPANY
AMERICAN METASEAL COMPANY
ARNOLD AND MARGARET PETERSON TRUST
AUTOMATION PLATING CORPORATION
AVANESSIANS, ARTIK
AVANESSIANS, ARTIK
AVIBANK MANUFACTURING
AVIBANK MANUFACTURING
BENCO ENTERPRISES, INC.
BENCO ENTERPRISES, INC.
BROCK BUS LINES
BROCK BUS LINES
BROCK BUS LINES
BURBANK STEEL TREATING, INC.
BURBANK STEEL TREATING, INC.
BURBANK STEEL TREATING, INC.
BURBANK STEEL TREATING, INC.
BURMAN TECHNICAL SERVICES, INC.
CARL M. BUCK BUILDING CO.
CHARLES C. LITCHFIELD
CHARLES C. LITCHFIELD
COLTEC INDUSTRIES, INC.
COLTEC INDUSTRIES, INC.
COMET PLATING CO., INC.
COMMERCIAL INSPECTION SERVICES
COMMERCIAL INSPECTION SERVICES
COURTAULDS AEROSPACE, INC.
COURTAULDS AEROSPACE, INC.
COURTAULDS AEROSPACE, INC.
CREDIT MANAGERS ASSOCIATION OF CALIFORNIA
DATRON INC.
DATRON INC.
DATRON INC.
DATRON, INC.
DAVID J. HIGGINS, TRUSTEE
DAVID J. HIGGINS, TRUSTEE
DOROTHY A. KAHL & WILLIAM C. KAHL
DRILUBE COMPANY
DRILUBE COMPANY
EDWARD FURER TRUST
ESTATE OF HELEN L. POWERS

**SAN FERNANDO VALLEY (AREA 2) (Continued)** **1000710134**

EXCELLO PLATING
EXCELLO PLATING
FIBER-RESIN CORP.
FIBER-RESIN CORPORATION

Click this hyperlink while viewing on your computer to access
94 additional PRP: record(s) in the EDR Site Report.

ICIS:

| | |
|---|---|
| Enforcement Action ID: | 09-2013-2516 |
| FRS ID: | 110009267970 |
| Program ID: | FRS 110009267970 |
| Action Name: | SETTLEMENT AGREEMENT AND ORDER ON CONSENT FOR REMOVAL ACTION BY BFPP |
| Full Address: | CRYSTAL SPRINGS WELLFIELD AREA CRYSTAL SPRINGS WELLFIELD AREA GLENDALE CA 91209 |
| State: | California |
| Facility Name: | SAN FERNANDO VALLEY (AREA 2) |
| Facility Address: | CRYSTAL SPRINGS WELLFIELD AREA GLENDALE, CA 91209 |
| Enforcement Action Type: | CERCLA 106 AO For Resp Action/Imm Haz |
| Facility County: | LOS ANGELES |
| EPA Region #: | 9 |

| | |
|---|---|
| Enforcement Action ID: | 09-2013-2516 |
| FRS ID: | 110009267970 |
| Program ID: | DTSC-ENVIROSTOR 19990012 |
| Action Name: | SETTLEMENT AGREEMENT AND ORDER ON CONSENT FOR REMOVAL ACTION BY BFPP |
| Full Address: | CRYSTAL SPRINGS WELLFIELD AREA CRYSTAL SPRINGS WELLFIELD AREA GLENDALE CA 91209 |
| State: | California |
| Facility Name: | SAN FERNANDO VALLEY (AREA 2) |
| Facility Address: | CRYSTAL SPRINGS WELLFIELD AREA GLENDALE, CA 91209 |
| Enforcement Action Type: | CERCLA 106 AO For Resp Action/Imm Haz |
| Facility County: | LOS ANGELES |
| EPA Region #: | 9 |

| | |
|---|---|
| Enforcement Action ID: | 09-2013-2516 |
| FRS ID: | 110009267970 |
| Program ID: | CERCLIS CAD980894901 |
| Action Name: | SETTLEMENT AGREEMENT AND ORDER ON CONSENT FOR REMOVAL ACTION BY BFPP |
| Full Address: | CRYSTAL SPRINGS WELLFIELD AREA CRYSTAL SPRINGS WELLFIELD AREA GLENDALE CA 91209 |
| State: | California |
| Facility Name: | SAN FERNANDO VALLEY (AREA 2) |
| Facility Address: | CRYSTAL SPRINGS WELLFIELD AREA GLENDALE, CA 91209 |
| Enforcement Action Type: | CERCLA 106 AO For Resp Action/Imm Haz |
| Facility County: | LOS ANGELES |
| EPA Region #: | 9 |

| | |
|---|---|
| Enforcement Action ID: | 09-2012-2505 |
| FRS ID: | 110009267970 |
| Program ID: | FRS 110009267970 |
| Action Name: | SPIRITO FAMILY TRUST AO FOR COST RECOVERY, GLENDALE OU |
| Full Address: | CRYSTAL SPRINGS WELLFIELD AREA CRYSTAL SPRINGS WELLFIELD AREA GLENDALE CA 91209 |

**SAN FERNANDO VALLEY (AREA 2) (Continued)** **1000710134**

State: California
Facility Name: SAN FERNANDO VALLEY (AREA 2)
Facility Address: CRYSTAL SPRINGS WELLFIELD AREA
GLENDALE, CA 91209
Enforcement Action Type: CERCLA 122h Agrmt For Cost Recovery
Facility County: LOS ANGELES
EPA Region #: 9

Enforcement Action ID: 09-2012-2505
FRS ID: 110009267970
Program ID: DTSC-ENVIROSTOR 19990012
Action Name: SPIRITO FAMILY TRUST AO FOR COST RECOVERY, GLENDALE OU
Full Address: CRYSTAL SPRINGS WELLFIELD AREA CRYSTAL SPRINGS WELLFIELD AREA GLENDALE
CA 91209
State: California
Facility Name: SAN FERNANDO VALLEY (AREA 2)
Facility Address: CRYSTAL SPRINGS WELLFIELD AREA
GLENDALE, CA 91209
Enforcement Action Type: CERCLA 122h Agrmt For Cost Recovery
Facility County: LOS ANGELES
EPA Region #: 9

Enforcement Action ID: 09-2012-2505
FRS ID: 110009267970
Program ID: CERCLIS CAD980894901
Action Name: SPIRITO FAMILY TRUST AO FOR COST RECOVERY, GLENDALE OU
Full Address: CRYSTAL SPRINGS WELLFIELD AREA CRYSTAL SPRINGS WELLFIELD AREA GLENDALE
CA 91209
State: California
Facility Name: SAN FERNANDO VALLEY (AREA 2)
Facility Address: CRYSTAL SPRINGS WELLFIELD AREA
GLENDALE, CA 91209
Enforcement Action Type: CERCLA 122h Agrmt For Cost Recovery
Facility County: LOS ANGELES
EPA Region #: 9

Enforcement Action ID: 09-2012-2504
FRS ID: 110009267970
Program ID: FRS 110009267970
Action Name: RALPHS GROCERY PROSPECTIVE PURCHASER AGREEMENT
Full Address: CRYSTAL SPRINGS WELLFIELD AREA CRYSTAL SPRINGS WELLFIELD AREA GLENDALE
CA 91209
State: California
Facility Name: SAN FERNANDO VALLEY (AREA 2)
Facility Address: CRYSTAL SPRINGS WELLFIELD AREA
GLENDALE, CA 91209
Enforcement Action Type: CERCLA 122G1B Agrmt For Innocent Landowner
Facility County: LOS ANGELES
EPA Region #: 9

Enforcement Action ID: 09-2012-2504
FRS ID: 110009267970
Program ID: DTSC-ENVIROSTOR 19990012
Action Name: RALPHS GROCERY PROSPECTIVE PURCHASER AGREEMENT
Full Address: CRYSTAL SPRINGS WELLFIELD AREA CRYSTAL SPRINGS WELLFIELD AREA GLENDALE
CA 91209
State: California

**SAN FERNANDO VALLEY (AREA 2) (Continued)** **1000710134**

Facility Name: SAN FERNANDO VALLEY (AREA 2)
Facility Address: CRYSTAL SPRINGS WELLFIELD AREA
GLENDALE, CA 91209
Enforcement Action Type: CERCLA 122G1B Agrmt For Innocent Landowner
Facility County: LOS ANGELES
EPA Region #: 9

Enforcement Action ID: 09-2012-2504
FRS ID: 110009267970
Program ID: CERCLIS CAD980894901
Action Name: RALPHS GROCERY PROSPECTIVE PURCHASER AGREEMENT
Full Address: CRYSTAL SPRINGS WELLFIELD AREA CRYSTAL SPRINGS WELLFIELD AREA GLENDALE CA 91209
State: California
Facility Name: SAN FERNANDO VALLEY (AREA 2)
Facility Address: CRYSTAL SPRINGS WELLFIELD AREA
GLENDALE, CA 91209
Enforcement Action Type: CERCLA 122G1B Agrmt For Innocent Landowner
Facility County: LOS ANGELES
EPA Region #: 9

Enforcement Action ID: 09-2011-2508
FRS ID: 110009267970
Program ID: DTSC-ENVIROSTOR 19990012
Action Name: SFV (AREA 2) SUPERFUND SITE, GLENDALE CHROMIUM OU SPECIFIED WORK AND COSTS AOC
Full Address: CRYSTAL SPRINGS WELLFIELD AREA CRYSTAL SPRINGS WELLFIELD AREA GLENDALE CA 91209
State: California
Facility Name: SAN FERNANDO VALLEY (AREA 2)
Facility Address: CRYSTAL SPRINGS WELLFIELD AREA
GLENDALE, CA 91209
Enforcement Action Type: CERCLA 122A/104A Agrmt For RI/FS
Facility County: LOS ANGELES
EPA Region #: 9

Enforcement Action ID: 09-2011-2508
FRS ID: 110009267970
Program ID: FRS 110009267970
Action Name: SFV (AREA 2) SUPERFUND SITE, GLENDALE CHROMIUM OU SPECIFIED WORK AND COSTS AOC
Full Address: CRYSTAL SPRINGS WELLFIELD AREA CRYSTAL SPRINGS WELLFIELD AREA GLENDALE CA 91209
State: California
Facility Name: SAN FERNANDO VALLEY (AREA 2)
Facility Address: CRYSTAL SPRINGS WELLFIELD AREA
GLENDALE, CA 91209
Enforcement Action Type: CERCLA 122A/104A Agrmt For RI/FS
Facility County: LOS ANGELES
EPA Region #: 9

Enforcement Action ID: 09-2011-2508
FRS ID: 110009267970
Program ID: CERCLIS CAD980894901
Action Name: SFV (AREA 2) SUPERFUND SITE, GLENDALE CHROMIUM OU SPECIFIED WORK AND COSTS AOC
Full Address: CRYSTAL SPRINGS WELLFIELD AREA CRYSTAL SPRINGS WELLFIELD AREA GLENDALE

**SAN FERNANDO VALLEY (AREA 2) (Continued)** **1000710134**

| | |
|---|---|
| | CA 91209 |
| State: | California |
| Facility Name: | SAN FERNANDO VALLEY (AREA 2) |
| Facility Address: | CRYSTAL SPRINGS WELLFIELD AREA<br>GLENDALE, CA 91209 |
| Enforcement Action Type: | CERCLA 122A/104A Agrmt For RI/FS |
| Facility County: | LOS ANGELES |
| EPA Region #: | 9 |
| | |
| Enforcement Action ID: | 09-2010-2519 |
| FRS ID: | 110009267970 |
| Program ID: | CERCLIS CAD980894901 |
| Action Name: | LYONDELL BANKRUPTCY (NC) |
| Full Address: | CRYSTAL SPRINGS WELLFIELD AREA CRYSTAL SPRINGS WELLFIELD AREA GLENDALE<br>CA 91209 |
| State: | California |
| Facility Name: | SAN FERNANDO VALLEY (AREA 2) |
| Facility Address: | CRYSTAL SPRINGS WELLFIELD AREA<br>GLENDALE, CA 91209 |
| Enforcement Action Type: | Bankruptcy |
| Facility County: | LOS ANGELES |
| EPA Region #: | 9 |
| | |
| Enforcement Action ID: | 09-2010-2519 |
| FRS ID: | 110009267970 |
| Program ID: | DTSC-ENVIROSTOR 19990012 |
| Action Name: | LYONDELL BANKRUPTCY (NC) |
| Full Address: | CRYSTAL SPRINGS WELLFIELD AREA CRYSTAL SPRINGS WELLFIELD AREA GLENDALE<br>CA 91209 |
| State: | California |
| Facility Name: | SAN FERNANDO VALLEY (AREA 2) |
| Facility Address: | CRYSTAL SPRINGS WELLFIELD AREA<br>GLENDALE, CA 91209 |
| Enforcement Action Type: | Bankruptcy |
| Facility County: | LOS ANGELES |
| EPA Region #: | 9 |
| | |
| Enforcement Action ID: | 09-2010-2519 |
| FRS ID: | 110009267970 |
| Program ID: | FRS 110009267970 |
| Action Name: | LYONDELL BANKRUPTCY (NC) |
| Full Address: | CRYSTAL SPRINGS WELLFIELD AREA CRYSTAL SPRINGS WELLFIELD AREA GLENDALE<br>CA 91209 |
| State: | California |
| Facility Name: | SAN FERNANDO VALLEY (AREA 2) |
| Facility Address: | CRYSTAL SPRINGS WELLFIELD AREA<br>GLENDALE, CA 91209 |
| Enforcement Action Type: | Bankruptcy |
| Facility County: | LOS ANGELES |
| EPA Region #: | 9 |
| | |
| Enforcement Action ID: | 09-2009-2521 |
| FRS ID: | 110009267970 |
| Program ID: | FRS 110009267970 |
| Action Name: | US VS. 718 WEST WILSON AVENUE AND HOVSEP BOGHOSSIAN |
| Full Address: | CRYSTAL SPRINGS WELLFIELD AREA CRYSTAL SPRINGS WELLFIELD AREA GLENDALE<br>CA 91209 |

**SAN FERNANDO VALLEY (AREA 2) (Continued)** **1000710134**

State: California
Facility Name: SAN FERNANDO VALLEY (AREA 2)
Facility Address: CRYSTAL SPRINGS WELLFIELD AREA
GLENDALE, CA 91209
Enforcement Action Type: Civil Judicial Action
Facility County: LOS ANGELES
EPA Region #: 9

Enforcement Action ID: 09-2009-2521
FRS ID: 110009267970
Program ID: CERCLIS CAD980894901
Action Name: US VS. 718 WEST WILSON AVENUE AND HOVSEP BOGHOSSIAN
Full Address: CRYSTAL SPRINGS WELLFIELD AREA CRYSTAL SPRINGS WELLFIELD AREA GLENDALE CA 91209
State: California
Facility Name: SAN FERNANDO VALLEY (AREA 2)
Facility Address: CRYSTAL SPRINGS WELLFIELD AREA
GLENDALE, CA 91209
Enforcement Action Type: Civil Judicial Action
Facility County: LOS ANGELES
EPA Region #: 9

Enforcement Action ID: 09-2009-2521
FRS ID: 110009267970
Program ID: DTSC-ENVIROSTOR 19990012
Action Name: US VS. 718 WEST WILSON AVENUE AND HOVSEP BOGHOSSIAN
Full Address: CRYSTAL SPRINGS WELLFIELD AREA CRYSTAL SPRINGS WELLFIELD AREA GLENDALE CA 91209
State: California
Facility Name: SAN FERNANDO VALLEY (AREA 2)
Facility Address: CRYSTAL SPRINGS WELLFIELD AREA
GLENDALE, CA 91209
Enforcement Action Type: Civil Judicial Action
Facility County: LOS ANGELES
EPA Region #: 9

Enforcement Action ID: 09-2008-2522
FRS ID: 110009267970
Program ID: FRS 110009267970
Action Name: GLENDALE OU ADMIN ORDER FOR RI / AVANESSIANS
Full Address: CRYSTAL SPRINGS WELLFIELD AREA CRYSTAL SPRINGS WELLFIELD AREA GLENDALE CA 91209
State: California
Facility Name: SAN FERNANDO VALLEY (AREA 2)
Facility Address: CRYSTAL SPRINGS WELLFIELD AREA
GLENDALE, CA 91209
Enforcement Action Type: CERCLA 106 AO For Resp Action/Imm Haz
Facility County: LOS ANGELES
EPA Region #: 9

Enforcement Action ID: 09-2008-2522
FRS ID: 110009267970
Program ID: DTSC-ENVIROSTOR 19990012
Action Name: GLENDALE OU ADMIN ORDER FOR RI / AVANESSIANS
Full Address: CRYSTAL SPRINGS WELLFIELD AREA CRYSTAL SPRINGS WELLFIELD AREA GLENDALE CA 91209
State: California

**SAN FERNANDO VALLEY (AREA 2) (Continued)** **1000710134**

Facility Name: SAN FERNANDO VALLEY (AREA 2)
Facility Address: CRYSTAL SPRINGS WELLFIELD AREA
GLENDALE, CA 91209
Enforcement Action Type: CERCLA 106 AO For Resp Action/Imm Haz
Facility County: LOS ANGELES
EPA Region #: 9

Enforcement Action ID: 09-2008-2522
FRS ID: 110009267970
Program ID: CERCLIS CAD980894901
Action Name: GLENDALE OU ADMIN ORDER FOR RI / AVANESSIANS
Full Address: CRYSTAL SPRINGS WELLFIELD AREA CRYSTAL SPRINGS WELLFIELD AREA GLENDALE CA 91209
State: California
Facility Name: SAN FERNANDO VALLEY (AREA 2)
Facility Address: CRYSTAL SPRINGS WELLFIELD AREA
GLENDALE, CA 91209
Enforcement Action Type: CERCLA 106 AO For Resp Action/Imm Haz
Facility County: LOS ANGELES
EPA Region #: 9

Enforcement Action ID: 09-2008-2512
FRS ID: 110009267970
Program ID: DTSC-ENVIROSTOR 19990012
Action Name: GLENDALE OU 04 LIBRASCOPE METALS INVESTIGATION
Full Address: CRYSTAL SPRINGS WELLFIELD AREA CRYSTAL SPRINGS WELLFIELD AREA GLENDALE CA 91209
State: California
Facility Name: SAN FERNANDO VALLEY (AREA 2)
Facility Address: CRYSTAL SPRINGS WELLFIELD AREA
GLENDALE, CA 91209
Enforcement Action Type: CERCLA 122h Agrmt For Cost Recovery
Facility County: LOS ANGELES
EPA Region #: 9

Enforcement Action ID: 09-2008-2512
FRS ID: 110009267970
Program ID: FRS 110009267970
Action Name: GLENDALE OU 04 LIBRASCOPE METALS INVESTIGATION
Full Address: CRYSTAL SPRINGS WELLFIELD AREA CRYSTAL SPRINGS WELLFIELD AREA GLENDALE CA 91209
State: California
Facility Name: SAN FERNANDO VALLEY (AREA 2)
Facility Address: CRYSTAL SPRINGS WELLFIELD AREA
GLENDALE, CA 91209
Enforcement Action Type: CERCLA 122h Agrmt For Cost Recovery
Facility County: LOS ANGELES
EPA Region #: 9

Enforcement Action ID: 09-2008-2512
FRS ID: 110009267970
Program ID: FRS 110009267970
Action Name: GLENDALE OU 04 LIBRASCOPE METALS INVESTIGATION
Full Address: CRYSTAL SPRINGS WELLFIELD AREA CRYSTAL SPRINGS WELLFIELD AREA GLENDALE CA 91209
State: California
Facility Name: SAN FERNANDO VALLEY (AREA 2)

**SAN FERNANDO VALLEY (AREA 2) (Continued)** **1000710134**

| | |
|---|---|
| Facility Address: | CRYSTAL SPRINGS WELLFIELD AREA<br>GLENDALE, CA 91209 |
| Enforcement Action Type: | CERCLA 104E5A AO For Access And/Or Info |
| Facility County: | LOS ANGELES |
| EPA Region #: | 9 |
| | |
| Enforcement Action ID: | 09-2008-2512 |
| FRS ID: | 110009267970 |
| Program ID: | DTSC-ENVIROSTOR 19990012 |
| Action Name: | GLENDALE OU 04 LIBRASCOPE METALS INVESTIGATION |
| Full Address: | CRYSTAL SPRINGS WELLFIELD AREA CRYSTAL SPRINGS WELLFIELD AREA GLENDALE<br>CA 91209 |
| State: | California |
| Facility Name: | SAN FERNANDO VALLEY (AREA 2) |
| Facility Address: | CRYSTAL SPRINGS WELLFIELD AREA<br>GLENDALE, CA 91209 |
| Enforcement Action Type: | CERCLA 104E5A AO For Access And/Or Info |
| Facility County: | LOS ANGELES |
| EPA Region #: | 9 |
| | |
| Enforcement Action ID: | 09-2008-2512 |
| FRS ID: | 110009267970 |
| Program ID: | CERCLIS CAD980894901 |
| Action Name: | GLENDALE OU 04 LIBRASCOPE METALS INVESTIGATION |
| Full Address: | CRYSTAL SPRINGS WELLFIELD AREA CRYSTAL SPRINGS WELLFIELD AREA GLENDALE<br>CA 91209 |
| State: | California |
| Facility Name: | SAN FERNANDO VALLEY (AREA 2) |
| Facility Address: | CRYSTAL SPRINGS WELLFIELD AREA<br>GLENDALE, CA 91209 |
| Enforcement Action Type: | CERCLA 104E5A AO For Access And/Or Info |
| Facility County: | LOS ANGELES |
| EPA Region #: | 9 |
| | |
| Enforcement Action ID: | 09-2008-2512 |
| FRS ID: | 110009267970 |
| Program ID: | CERCLIS CAD980894901 |
| Action Name: | GLENDALE OU 04 LIBRASCOPE METALS INVESTIGATION |
| Full Address: | CRYSTAL SPRINGS WELLFIELD AREA CRYSTAL SPRINGS WELLFIELD AREA GLENDALE<br>CA 91209 |
| State: | California |
| Facility Name: | SAN FERNANDO VALLEY (AREA 2) |
| Facility Address: | CRYSTAL SPRINGS WELLFIELD AREA<br>GLENDALE, CA 91209 |
| Enforcement Action Type: | CERCLA 106 AO For Resp Action/Imm Haz |
| Facility County: | LOS ANGELES |
| EPA Region #: | 9 |
| | |
| Enforcement Action ID: | 09-2008-2512 |
| FRS ID: | 110009267970 |
| Program ID: | CERCLIS CAD980894901 |
| Action Name: | GLENDALE OU 04 LIBRASCOPE METALS INVESTIGATION |
| Full Address: | CRYSTAL SPRINGS WELLFIELD AREA CRYSTAL SPRINGS WELLFIELD AREA GLENDALE<br>CA 91209 |
| State: | California |
| Facility Name: | SAN FERNANDO VALLEY (AREA 2) |
| Facility Address: | CRYSTAL SPRINGS WELLFIELD AREA |

**SAN FERNANDO VALLEY (AREA 2) (Continued)** **1000710134**

GLENDALE, CA 91209
Enforcement Action Type: CERCLA 122h Agrmt For Cost Recovery
Facility County: LOS ANGELES
EPA Region #: 9

Enforcement Action ID: 09-2008-2512
FRS ID: 110009267970
Program ID: FRS 110009267970
Action Name: GLENDALE OU 04 LIBRASCOPE METALS INVESTIGATION
Full Address: CRYSTAL SPRINGS WELLFIELD AREA CRYSTAL SPRINGS WELLFIELD AREA GLENDALE CA 91209
State: California
Facility Name: SAN FERNANDO VALLEY (AREA 2)
Facility Address: CRYSTAL SPRINGS WELLFIELD AREA
GLENDALE, CA 91209
Enforcement Action Type: CERCLA 106 AO For Resp Action/Imm Haz
Facility County: LOS ANGELES
EPA Region #: 9

Enforcement Action ID: 09-2008-2512
FRS ID: 110009267970
Program ID: DTSC-ENVIROSTOR 19990012
Action Name: GLENDALE OU 04 LIBRASCOPE METALS INVESTIGATION
Full Address: CRYSTAL SPRINGS WELLFIELD AREA CRYSTAL SPRINGS WELLFIELD AREA GLENDALE CA 91209
State: California
Facility Name: SAN FERNANDO VALLEY (AREA 2)
Facility Address: CRYSTAL SPRINGS WELLFIELD AREA
GLENDALE, CA 91209
Enforcement Action Type: CERCLA 106 AO For Resp Action/Imm Haz
Facility County: LOS ANGELES
EPA Region #: 9

Enforcement Action ID: 09-2008-2510
FRS ID: 110009267970
Program ID: DTSC-ENVIROSTOR 19990012
Action Name: SAN FERNANDO AREA 2 UAO FOR OU 04 RI/FS
Full Address: CRYSTAL SPRINGS WELLFIELD AREA CRYSTAL SPRINGS WELLFIELD AREA GLENDALE CA 91209
State: California
Facility Name: SAN FERNANDO VALLEY (AREA 2)
Facility Address: CRYSTAL SPRINGS WELLFIELD AREA
GLENDALE, CA 91209
Enforcement Action Type: CERCLA 106 AO For Resp Action/Imm Haz
Facility County: LOS ANGELES
EPA Region #: 9

Enforcement Action ID: 09-2008-2510
FRS ID: 110009267970
Program ID: CERCLIS CAD980894901
Action Name: SAN FERNANDO AREA 2 UAO FOR OU 04 RI/FS
Full Address: CRYSTAL SPRINGS WELLFIELD AREA CRYSTAL SPRINGS WELLFIELD AREA GLENDALE CA 91209
State: California
Facility Name: SAN FERNANDO VALLEY (AREA 2)
Facility Address: CRYSTAL SPRINGS WELLFIELD AREA
GLENDALE, CA 91209

**SAN FERNANDO VALLEY (AREA 2) (Continued)** **1000710134**

Enforcement Action Type: CERCLA 106 AO For Resp Action/Imm Haz
Facility County: LOS ANGELES
EPA Region #: 9

Enforcement Action ID: 09-2008-2510
FRS ID: 110009267970
Program ID: FRS 110009267970
Action Name: SAN FERNANDO AREA 2 UAO FOR OU 04 RI/FS
Full Address: CRYSTAL SPRINGS WELLFIELD AREA CRYSTAL SPRINGS WELLFIELD AREA GLENDALE CA 91209
State: California
Facility Name: SAN FERNANDO VALLEY (AREA 2)
Facility Address: CRYSTAL SPRINGS WELLFIELD AREA
GLENDALE, CA 91209
Enforcement Action Type: CERCLA 106 AO For Resp Action/Imm Haz
Facility County: LOS ANGELES
EPA Region #: 9

Enforcement Action ID: 09-1997-0015
FRS ID: 110009267970
Program ID: CERCLIS CAD980894901
Action Name: SAN FERNANDO GLENDALE (NORTH AND SOUTH)
Full Address: CRYSTAL SPRINGS WELLFIELD AREA CRYSTAL SPRINGS WELLFIELD AREA GLENDALE CA 91209
State: California
Facility Name: SAN FERNANDO VALLEY (AREA 2)
Facility Address: CRYSTAL SPRINGS WELLFIELD AREA
GLENDALE, CA 91209
Enforcement Action Type: Civil Judicial Action
Facility County: LOS ANGELES
EPA Region #: 9

Enforcement Action ID: 09-1997-0015
FRS ID: 110009267970
Program ID: DTSC-ENVIROSTOR 19990012
Action Name: SAN FERNANDO GLENDALE (NORTH AND SOUTH)
Full Address: CRYSTAL SPRINGS WELLFIELD AREA CRYSTAL SPRINGS WELLFIELD AREA GLENDALE CA 91209
State: California
Facility Name: SAN FERNANDO VALLEY (AREA 2)
Facility Address: CRYSTAL SPRINGS WELLFIELD AREA
GLENDALE, CA 91209
Enforcement Action Type: Civil Judicial Action
Facility County: LOS ANGELES
EPA Region #: 9

Enforcement Action ID: 09-1997-0015
FRS ID: 110009267970
Program ID: FRS 110009267970
Action Name: SAN FERNANDO GLENDALE (NORTH AND SOUTH)
Full Address: CRYSTAL SPRINGS WELLFIELD AREA CRYSTAL SPRINGS WELLFIELD AREA GLENDALE CA 91209
State: California
Facility Name: SAN FERNANDO VALLEY (AREA 2)
Facility Address: CRYSTAL SPRINGS WELLFIELD AREA
GLENDALE, CA 91209
Enforcement Action Type: Civil Judicial Action

**SAN FERNANDO VALLEY (AREA 2) (Continued)** **1000710134**

Facility County: LOS ANGELES
EPA Region #: 9

Program ID: CERCLIS CAD980894901
Facility Name: SAN FERNANDO VALLEY (AREA 2)
Address: CRYSTAL SPRINGS WELLFIELD AREA
Tribal Indicator: N
Fed Facility: No
NAIC Code: Not reported
SIC Code: Not reported

Program ID: DTSC-ENVIROSTOR 19990012
Facility Name: SAN FERNANDO VALLEY (AREA 2)
Address: CRYSTAL SPRINGS WELLFIELD AREA
Tribal Indicator: N
Fed Facility: No
NAIC Code: Not reported
SIC Code: Not reported

Program ID: FRS 110009267970
Facility Name: SAN FERNANDO VALLEY (AREA 2)
Address: CRYSTAL SPRINGS WELLFIELD AREA
Tribal Indicator: N
Fed Facility: No
NAIC Code: Not reported
SIC Code: Not reported

Program ID: CERCLIS CAD980894901
Facility Name: SAN FERNANDO VALLEY (AREA 2)
Address: CRYSTAL SPRINGS WELLFIELD AREA
Tribal Indicator: N
Fed Facility: No
NAIC Code: Not reported
SIC Code: Not reported

Program ID: DTSC-ENVIROSTOR 19990012
Facility Name: SAN FERNANDO VALLEY (AREA 2)
Address: CRYSTAL SPRINGS WELLFIELD AREA
Tribal Indicator: N
Fed Facility: No
NAIC Code: Not reported
SIC Code: Not reported

Program ID: FRS 110009267970
Facility Name: SAN FERNANDO VALLEY (AREA 2)
Address: CRYSTAL SPRINGS WELLFIELD AREA
Tribal Indicator: N
Fed Facility: No
NAIC Code: Not reported
SIC Code: Not reported

Program ID: CERCLIS CAD980894901
Facility Name: SAN FERNANDO VALLEY (AREA 2)
Address: CRYSTAL SPRINGS WELLFIELD AREA
Tribal Indicator: N
Fed Facility: No

**SAN FERNANDO VALLEY (AREA 2) (Continued)** **1000710134**

NAIC Code: Not reported
SIC Code: Not reported

Program ID: DTSC-ENVIROSTOR 19990012
Facility Name: SAN FERNANDO VALLEY (AREA 2)
Address: CRYSTAL SPRINGS WELLFIELD AREA
Tribal Indicator: N
Fed Facility: No
NAIC Code: Not reported
SIC Code: Not reported

Program ID: FRS 110009267970
Facility Name: SAN FERNANDO VALLEY (AREA 2)
Address: CRYSTAL SPRINGS WELLFIELD AREA
Tribal Indicator: N
Fed Facility: No
NAIC Code: Not reported
SIC Code: Not reported

Program ID: CERCLIS CAD980894901
Facility Name: SAN FERNANDO VALLEY (AREA 2)
Address: CRYSTAL SPRINGS WELLFIELD AREA
Tribal Indicator: N
Fed Facility: No
NAIC Code: Not reported
SIC Code: Not reported

Program ID: DTSC-ENVIROSTOR 19990012
Facility Name: SAN FERNANDO VALLEY (AREA 2)
Address: CRYSTAL SPRINGS WELLFIELD AREA
Tribal Indicator: N
Fed Facility: No
NAIC Code: Not reported
SIC Code: Not reported

Program ID: FRS 110009267970
Facility Name: SAN FERNANDO VALLEY (AREA 2)
Address: CRYSTAL SPRINGS WELLFIELD AREA
Tribal Indicator: N
Fed Facility: No
NAIC Code: Not reported
SIC Code: Not reported

Program ID: CERCLIS CAD980894901
Facility Name: SAN FERNANDO VALLEY (AREA 2)
Address: CRYSTAL SPRINGS WELLFIELD AREA
Tribal Indicator: N
Fed Facility: No
NAIC Code: Not reported
SIC Code: Not reported

Program ID: DTSC-ENVIROSTOR 19990012
Facility Name: SAN FERNANDO VALLEY (AREA 2)
Address: CRYSTAL SPRINGS WELLFIELD AREA
Tribal Indicator: N
Fed Facility: No
NAIC Code: Not reported

**SAN FERNANDO VALLEY (AREA 2) (Continued)** **1000710134**

SIC Code: Not reported

Program ID: FRS 110009267970
Facility Name: SAN FERNANDO VALLEY (AREA 2)
Address: CRYSTAL SPRINGS WELLFIELD AREA
Tribal Indicator: N
Fed Facility: No
NAIC Code: Not reported
SIC Code: Not reported

Program ID: CERCLIS CAD980894901
Facility Name: SAN FERNANDO VALLEY (AREA 2)
Address: CRYSTAL SPRINGS WELLFIELD AREA
Tribal Indicator: N
Fed Facility: No
NAIC Code: Not reported
SIC Code: Not reported

Program ID: DTSC-ENVIROSTOR 19990012
Facility Name: SAN FERNANDO VALLEY (AREA 2)
Address: CRYSTAL SPRINGS WELLFIELD AREA
Tribal Indicator: N
Fed Facility: No
NAIC Code: Not reported
SIC Code: Not reported

Program ID: FRS 110009267970
Facility Name: SAN FERNANDO VALLEY (AREA 2)
Address: CRYSTAL SPRINGS WELLFIELD AREA
Tribal Indicator: N
Fed Facility: No
NAIC Code: Not reported
SIC Code: Not reported

Program ID: CERCLIS CAD980894901
Facility Name: SAN FERNANDO VALLEY (AREA 2)
Address: CRYSTAL SPRINGS WELLFIELD AREA
Tribal Indicator: N
Fed Facility: No
NAIC Code: Not reported
SIC Code: Not reported

Program ID: DTSC-ENVIROSTOR 19990012
Facility Name: SAN FERNANDO VALLEY (AREA 2)
Address: CRYSTAL SPRINGS WELLFIELD AREA
Tribal Indicator: N
Fed Facility: No
NAIC Code: Not reported
SIC Code: Not reported

Program ID: FRS 110009267970
Facility Name: SAN FERNANDO VALLEY (AREA 2)
Address: CRYSTAL SPRINGS WELLFIELD AREA
Tribal Indicator: N
Fed Facility: No
NAIC Code: Not reported
SIC Code: Not reported

**SAN FERNANDO VALLEY (AREA 2) (Continued)** **1000710134**

Program ID: CERCLIS CAD980894901
Facility Name: SAN FERNANDO VALLEY (AREA 2)
Address: CRYSTAL SPRINGS WELLFIELD AREA
Tribal Indicator: N
Fed Facility: No
NAIC Code: Not reported
SIC Code: Not reported

Program ID: DTSC-ENVIROSTOR 19990012
Facility Name: SAN FERNANDO VALLEY (AREA 2)
Address: CRYSTAL SPRINGS WELLFIELD AREA
Tribal Indicator: N
Fed Facility: No
NAIC Code: Not reported
SIC Code: Not reported

Program ID: FRS 110009267970
Facility Name: SAN FERNANDO VALLEY (AREA 2)
Address: CRYSTAL SPRINGS WELLFIELD AREA
Tribal Indicator: N
Fed Facility: No
NAIC Code: Not reported
SIC Code: Not reported

Program ID: CERCLIS CAD980894901
Facility Name: SAN FERNANDO VALLEY (AREA 2)
Address: CRYSTAL SPRINGS WELLFIELD AREA
Tribal Indicator: N
Fed Facility: No
NAIC Code: Not reported
SIC Code: Not reported

Program ID: DTSC-ENVIROSTOR 19990012
Facility Name: SAN FERNANDO VALLEY (AREA 2)
Address: CRYSTAL SPRINGS WELLFIELD AREA
Tribal Indicator: N
Fed Facility: No
NAIC Code: Not reported
SIC Code: Not reported

Program ID: FRS 110009267970
Facility Name: SAN FERNANDO VALLEY (AREA 2)
Address: CRYSTAL SPRINGS WELLFIELD AREA
Tribal Indicator: N
Fed Facility: No
NAIC Code: Not reported
SIC Code: Not reported

Program ID: CERCLIS CAD980894901
Facility Name: SAN FERNANDO VALLEY (AREA 2)
Address: CRYSTAL SPRINGS WELLFIELD AREA
Tribal Indicator: N
Fed Facility: No
NAIC Code: Not reported
SIC Code: Not reported

Program ID: DTSC-ENVIROSTOR 19990012

**SAN FERNANDO VALLEY (AREA 2) (Continued)** **1000710134**

| | |
|---|---|
| Facility Name: | SAN FERNANDO VALLEY (AREA 2) |
| Address: | CRYSTAL SPRINGS WELLFIELD AREA |
| Tribal Indicator: | N |
| Fed Facility: | No |
| NAIC Code: | Not reported |
| SIC Code: | Not reported |

| | |
|---|---|
| Program ID: | FRS 110009267970 |
| Facility Name: | SAN FERNANDO VALLEY (AREA 2) |
| Address: | CRYSTAL SPRINGS WELLFIELD AREA |
| Tribal Indicator: | N |
| Fed Facility: | No |
| NAIC Code: | Not reported |
| SIC Code: | Not reported |

FINDS:

Registry ID: 110009267970

Environmental Interest/Information System

California Department of Toxic Substances Control EnviroStor System (DTSC-EnviroStor) is an online search and Geographic Information System (GIS) tool for identifying sites that have known contamination or sites for which there may be reasons to investigate further. The EnviroStor database includes the following site types: Federal Superfund sites (National Priorities List (NPL)); State Response, including Military Facilities and State Superfund; Voluntary Cleanup; and School sites.

CERCLIS (Comprehensive Environmental Response, Compensation, and Liability Information System) is the Superfund database that is used to support management in all phases of the Superfund program. The system contains information on all aspects of hazardous waste sites, including an inventory of sites, planned and actual site activities, and financial information.

CORTESE:

| | |
|---|---|
| Region: | CORTESE |
| Envirostor Id: | 19990012 |
| Site/Facility Type: | FEDERAL SUPERFUND - LISTED |
| Cleanup Status: | ACTIVE |
| Status Date: | 01/01/1984 |
| Site Code: | 300127, 300287, 300288 |
| Latitude: | 34.1575 |
| Longitude: | -118.28472 |
| Owner: | Not reported |
| Enf Type: | Not reported |
| Swat R: | Not reported |
| Flag: | envirostor |
| Order No: | Not reported |
| Waste Discharge System No: | Not reported |
| Effective Date: | Not reported |
| Region 2: | Not reported |
| WID Id: | Not reported |
| Solid Waste Id No: | Not reported |

**SAN FERNANDO VALLEY (AREA 2) (Continued)** **1000710134**

Waste Management Uit Name: Not reported

ECHO:

| | |
|---|---|
| Envid: | 1000710134 |
| Registry ID: | 110009267970 |
| DFR URL: | http://echo.epa.gov/detailed_facility_report?fid=110009267970 |

---

**B16** **KELLOGG AVENUE DUMP-GLENDALE** **WMUDS/SWAT** **S103441449**
**NNW** **630 KELLOGG AVENUE** **N/A**
**< 1/8** **GLENDALE, CA**
**0.003 mi.**
**16 ft.** **Site 1 of 7 in cluster B**

**Relative:**
**Higher**

**Actual:**
**468 ft.**

WMUDS/SWAT:

| | |
|---|---|
| Edit Date: | Not reported |
| Complexity: | Not reported |
| Primary Waste: | Not reported |
| Primary Waste Type: | Not reported |
| Secondary Waste: | Not reported |
| Secondary Waste Type: | Not reported |
| Base Meridian: | Not reported |
| NPID: | Not reported |
| Tonnage: | 0 |
| Regional Board ID: | Not reported |
| Municipal Solid Waste: | False |
| Superorder: | False |
| Open To Public: | False |
| Waste List: | False |
| Agency Type: | Not reported |
| Agency Name: | Not reported |
| Agency Department: | Not reported |
| Agency Address: | Not reported |
| Agency City,St,Zip: | Not reported |
| Agency Contact: | Not reported |
| Agency Telephone: | Not reported |
| Land Owner Name: | Not reported |
| Land Owner Address: | Not reported |
| Land Owner City,St,Zip: | CA |
| Land Owner Contact: | Not reported |
| Land Owner Phone: | Not reported |
| Region: | 4 |
| Facility Type: | Not reported |
| Facility Description: | Not reported |
| Facility Telephone: | Not reported |
| SWAT Facility Name: | Not reported |
| Primary SIC: | Not reported |
| Secondary SIC: | Not reported |
| Comments: | Not reported |
| Last Facility Editors: | Not reported |
| Waste Discharge System: | False |
| Solid Waste Assessment Test Program: | True |
| Toxic Pits Cleanup Act Program: | False |
| Resource Conservation Recovery Act: | False |
| Department of Defence: | False |
| Solid Waste Assessment Test Program: | Not reported |
| Threat to Water Quality: | Not reported |
| Sub Chapter 15: | False |

**KELLOGG AVENUE DUMP-GLENDALE (Continued)** **S103441449**

| | |
|---|---|
| Regional Board Project Officer: | LT |
| Number of WMUDS at Facility: | 1 |
| Section Range: | Not reported |
| RCRA Facility: | Not reported |
| Waste Discharge Requirements: | Not reported |
| Self-Monitoring Rept. Frequency: | Not reported |
| Waste Discharge System ID: | 4 190197NUR |
| Solid Waste Information ID: | Not reported |

---

**B17**
**NNW**
**< 1/8**
**0.013 mi.**
**70 ft.**

**GRAYSON POWER PLANT LARRY MOOREHOUSE**
**634 BEKINS**
**GLENDALE, CA 91201**

**SWEEPS UST** **S101588360**
**CA FID UST** **N/A**

**Site 2 of 7 in cluster B**

**Relative:**
**Higher**

**Actual:**
**469 ft.**

SWEEPS UST:

| | |
|---|---|
| Status: | Active |
| Comp Number: | 11621 |
| Number: | 4 |
| Board Of Equalization: | Not reported |
| Referral Date: | 11-03-92 |
| Action Date: | 11-03-92 |
| Created Date: | 11-03-92 |
| Owner Tank Id: | 11621 |
| SWRCB Tank Id: | 19-070-011621-000001 |
| Tank Status: | A |
| Capacity: | 1000 |
| Active Date: | 12-16-92 |
| Tank Use: | OIL |
| STG: | W |
| Content: | WASTE OIL |
| Number Of Tanks: | 4 |

| | |
|---|---|
| Status: | Active |
| Comp Number: | 11621 |
| Number: | 4 |
| Board Of Equalization: | Not reported |
| Referral Date: | 11-03-92 |
| Action Date: | 11-03-92 |
| Created Date: | 11-03-92 |
| Owner Tank Id: | 11621 |
| SWRCB Tank Id: | 19-070-011621-000002 |
| Tank Status: | A |
| Capacity: | 10000 |
| Active Date: | 12-16-92 |
| Tank Use: | M.V. FUEL |
| STG: | P |
| Content: | REG UNLEADED |
| Number Of Tanks: | Not reported |

| | |
|---|---|
| Status: | Active |
| Comp Number: | 11621 |
| Number: | 4 |
| Board Of Equalization: | Not reported |
| Referral Date: | 11-03-92 |
| Action Date: | 11-03-92 |
| Created Date: | 11-03-92 |
| Owner Tank Id: | 11621 |

**GRAYSON POWER PLANT LARRY MOOREHOUSE (Continued)** **S101588360**

| | |
|---|---|
| SWRCB Tank Id: | 19-070-011621-000003 |
| Tank Status: | A |
| Capacity: | 10000 |
| Active Date: | 12-16-92 |
| Tank Use: | M.V. FUEL |
| STG: | P |
| Content: | REG UNLEADED |
| Number Of Tanks: | Not reported |

| | |
|---|---|
| Status: | Active |
| Comp Number: | 11621 |
| Number: | 4 |
| Board Of Equalization: | Not reported |
| Referral Date: | 11-03-92 |
| Action Date: | 11-03-92 |
| Created Date: | 11-03-92 |
| Owner Tank Id: | 11621 |
| SWRCB Tank Id: | 19-070-011621-000004 |
| Tank Status: | A |
| Capacity: | 10000 |
| Active Date: | 12-16-92 |
| Tank Use: | M.V. FUEL |
| STG: | P |
| Content: | REG UNLEADED |
| Number Of Tanks: | Not reported |

CA FID UST:

| | |
|---|---|
| Facility ID: | 19056738 |
| Regulated By: | UTNKA |
| Regulated ID: | Not reported |
| Cortese Code: | Not reported |
| SIC Code: | Not reported |
| Facility Phone: | 8185482088 |
| Mail To: | Not reported |
| Mailing Address: | 634 BEKINS |
| Mailing Address 2: | Not reported |
| Mailing City,St,Zip: | GLENDALE 91201 |
| Contact: | Not reported |
| Contact Phone: | Not reported |
| DUNs Number: | Not reported |
| NPDES Number: | Not reported |
| EPA ID: | Not reported |
| Comments: | Not reported |
| Status: | Active |

---

**B18** **GLENDALE CITY, PUBLIC SERVICE** **LUST** **S103587493**
**NNW** **634 BEKINS WAY** **EMI** **N/A**
**< 1/8** **GLENDALE, CA 91201** **HIST CORTESE**
**0.013 mi.** **WDS**
**70 ft.** **Site 3 of 7 in cluster B**

**Relative:**
**Higher**

**Actual:**
**469 ft.**

LUST REG 4:

| | |
|---|---|
| Region: | 4 |
| Regional Board: | 04 |
| County: | Los Angeles |
| Facility Id: | 109.0756 |
| Status: | Case Closed |

**GLENDALE CITY, PUBLIC SERVICE (Continued)** **S103587493**

| | | |
|---|---|---|
| Substance: | 1 | |
| Substance Quantity: | Not reported | |
| Local Case No: | Not reported | |
| Case Type: | Soil | |
| Abatement Method Used at the Site: | | Not reported |
| Global ID: | T0603700174 | |
| W Global ID: | Not reported | |
| Staff: | WIP | |
| Local Agency: | 19070 | |
| Cross Street: | BEKINS WY | |
| Enforcement Type: | Not reported | |
| Date Leak Discovered: | Not reported | |
| Date Leak First Reported: | | 2/11/1988 |
| Date Leak Record Entered: | 3/16/1988 | |
| Date Confirmation Began: | Not reported | |
| Date Leak Stopped: | Not reported | |
| Date Case Last Changed on Database: | | 11/18/1997 |
| Date the Case was Closed: | | 11/18/1997 |
| How Leak Discovered: | Not reported | |
| How Leak Stopped: | Not reported | |
| Cause of Leak: | Not reported | |
| Leak Source: | Not reported | |
| Operator: | MCELHINEY, J. J. | |
| Water System: | Not reported | |
| Well Name: | Not reported | |
| Approx. Dist To Production Well (ft): | | 1821.6259418072274928833355084 |
| Source of Cleanup Funding: | | Not reported |
| Preliminary Site Assessment Workplan Submitted: | | Not reported |
| Preliminary Site Assessment Began: | | Not reported |
| Pollution Characterization Began: | | 3/16/1988 |
| Remediation Plan Submitted: | | Not reported |
| Remedial Action Underway: | | Not reported |
| Post Remedial Action Monitoring Began: | | Not reported |
| Enforcement Action Date: | | Not reported |
| Historical Max MTBE Date: | | Not reported |
| Hist Max MTBE Conc in Groundwater: | | Not reported |
| Hist Max MTBE Conc in Soil: | | Not reported |
| Significant Interim Remedial Action Taken: | | Not reported |
| GW Qualifier: | Not reported | |
| Soil Qualifier: | Not reported | |
| Organization: | Not reported | |
| Owner Contact: | Not reported | |
| Responsible Party: | CITY OF GLENDALE | |
| RP Address: | 613 EAST BROADWAY, GLENDALE, CA 91205 | |
| Program: | LUST | |
| Lat/Long: | 34.157206 / -1 | |
| Local Agency Staff: | UNK | |
| Beneficial Use: | Not reported | |
| Priority: | Not reported | |
| Cleanup Fund Id: | Not reported | |
| Suspended: | Not reported | |
| Assigned Name: | Not reported | |
| Summary: | OLD CASE #912010016 | |

EMI:

| | |
|---|---|
| Year: | 1993 |
| County Code: | 19 |

**GLENDALE CITY, PUBLIC SERVICE (Continued)** **S103587493**

| | |
|---|---|
| Air Basin: | SC |
| Facility ID: | 89105 |
| Air District Name: | SC |
| SIC Code: | 4911 |
| Air District Name: | SOUTH COAST AQMD |
| Community Health Air Pollution Info System: | Not reported |
| Consolidated Emission Reporting Rule: | Not reported |
| Total Organic Hydrocarbon Gases Tons/Yr: | 49 |
| Reactive Organic Gases Tons/Yr: | 16 |
| Carbon Monoxide Emissions Tons/Yr: | 26 |
| NOX - Oxides of Nitrogen Tons/Yr: | 116 |
| SOX - Oxides of Sulphur Tons/Yr: | 1 |
| Particulate Matter Tons/Yr: | 4 |
| Part. Matter 10 Micrometers and Smllr Tons/Yr: | 4 |

| | |
|---|---|
| Year: | 1995 |
| County Code: | 19 |
| Air Basin: | SC |
| Facility ID: | 89105 |
| Air District Name: | SC |
| SIC Code: | 4911 |
| Air District Name: | SOUTH COAST AQMD |
| Community Health Air Pollution Info System: | Not reported |
| Consolidated Emission Reporting Rule: | Not reported |
| Total Organic Hydrocarbon Gases Tons/Yr: | 49 |
| Reactive Organic Gases Tons/Yr: | 16 |
| Carbon Monoxide Emissions Tons/Yr: | 26 |
| NOX - Oxides of Nitrogen Tons/Yr: | 116 |
| SOX - Oxides of Sulphur Tons/Yr: | 1 |
| Particulate Matter Tons/Yr: | 4 |
| Part. Matter 10 Micrometers and Smllr Tons/Yr: | 4 |

| | |
|---|---|
| Year: | 1996 |
| County Code: | 19 |
| Air Basin: | SC |
| Facility ID: | 89105 |
| Air District Name: | SC |
| SIC Code: | 4911 |
| Air District Name: | SOUTH COAST AQMD |
| Community Health Air Pollution Info System: | Not reported |
| Consolidated Emission Reporting Rule: | Not reported |
| Total Organic Hydrocarbon Gases Tons/Yr: | 98 |
| Reactive Organic Gases Tons/Yr: | 20 |
| Carbon Monoxide Emissions Tons/Yr: | 27 |
| NOX - Oxides of Nitrogen Tons/Yr: | 109 |
| SOX - Oxides of Sulphur Tons/Yr: | 2 |
| Particulate Matter Tons/Yr: | 4 |
| Part. Matter 10 Micrometers and Smllr Tons/Yr: | 4 |

| | |
|---|---|
| Year: | 2005 |
| County Code: | 19 |
| Air Basin: | SC |
| Facility ID: | 800327 |
| Air District Name: | SC |
| SIC Code: | 4931 |
| Air District Name: | SOUTH COAST AQMD |
| Community Health Air Pollution Info System: | Not reported |

**GLENDALE CITY, PUBLIC SERVICE (Continued)** **S103587493**

| | |
|---|---|
| Consolidated Emission Reporting Rule: | Not reported |
| Total Organic Hydrocarbon Gases Tons/Yr: | 12.357515 |
| Reactive Organic Gases Tons/Yr: | 6.770512913 |
| Carbon Monoxide Emissions Tons/Yr: | 21.669075 |
| NOX - Oxides of Nitrogen Tons/Yr: | 38.634185 |
| SOX - Oxides of Sulphur Tons/Yr: | 1.35172175 |
| Particulate Matter Tons/Yr: | 3.392675 |
| Part. Matter 10 Micrometers and Smllr Tons/Yr: | 3.3590875265 |

HIST CORTESE:

| | |
|---|---|
| Region: | CORTESE |
| Facility County Code: | 19 |
| Reg By: | LTNKA |
| Reg Id: | 109.0756 |

WDS:

| | |
|---|---|
| Facility ID: | 4 19I001606 |
| Facility Type: | Other - Does not fall into the category of Municipal/Domestic, Industrial, Agricultural or Solid Waste (Class I, II or III) |
| Facility Status: | Active - Any facility with a continuous or seasonal discharge that is under Waste Discharge Requirements. |
| NPDES Number: | CAS000001 The 1st 2 characters designate the state. The remaining 7 are assigned by the Regional Board |
| Subregion: | 4 |
| Facility Telephone: | Not reported |
| Facility Contact: | Not reported |
| Agency Name: | GLENDALE CITY OF |
| Agency Address: | 633 E. Broadway |
| Agency City,St,Zip: | Glendale 91206 |
| Agency Contact: | Not reported |
| Agency Telephone: | Not reported |
| Agency Type: | City |
| SIC Code: | 0 |
| SIC Code 2: | Not reported |
| Primary Waste Type: | Not reported |
| Primary Waste: | Not reported |
| Waste Type2: | Not reported |
| Waste2: | Not reported |
| Primary Waste Type: | Not reported |
| Secondary Waste: | Not reported |
| Secondary Waste Type: | Not reported |
| Design Flow: | 0 |
| Baseline Flow: | 0 |
| Reclamation: | Not reported |
| POTW: | Not reported |
| Treat To Water: | Minor Threat to Water Quality. A violation of a regional board order should cause a relatively minor impairment of beneficial uses compared to a major or minor threat. Not: All nurds without a TTWQ will be considered a minor threat to water quality unless coded at a higher Level. A Zero (0) may be used to code those NURDS that are found to represent no threat to water quality. |
| Complexity: | Category C - Facilities having no waste treatment systems, such as cooling water dischargers or thosewho must comply through best management practices, facilities with passive waste treatment and disposal systems, such as septic systems with subsurface disposal, or dischargers having waste storage systems with land disposal such as |

**GLENDALE CITY, PUBLIC SERVICE (Continued)** **S103587493**

dairy waste ponds.

---

**B19**
**NNW**
**< 1/8**
**0.017 mi.**
**90 ft.**

**GLENDALE ENVELOPE INC.**
**807 AIRWAY**
**GLENDALE, CA 91201**

**WIP** **S102817679**
**N/A**

**Site 4 of 7 in cluster B**

**Relative:**
**Lower**

**Actual:**
**466 ft.**

WIP:

| | |
|---|---|
| Region: | 4 |
| File Number: | 109.0725 |
| **File Status:** | **Historical** |
| Staff: | MH |
| Facility Suite: | Not reported |

---

**B20**
**NNW**
**< 1/8**
**0.021 mi.**
**112 ft.**

**811 AIR WAY**
**GLENDALE, CA 91201**

**EDR Hist Auto** **1015643712**
**N/A**

**Site 5 of 7 in cluster B**

**Relative:**
**Lower**

**Actual:**
**466 ft.**

EDR Historical Auto Stations:

| | |
|---|---|
| Name: | ENGINES PLUS |
| Year: | 1999 |
| Address: | 811 AIR WAY |
| Name: | ENGINES PLUS |
| Year: | 2003 |
| Address: | 811 AIR WAY |
| Name: | ENGINES PLUS |
| Year: | 2004 |
| Address: | 811 AIR WAY |

---

**B21**
**NNW**
**< 1/8**
**0.021 mi.**
**112 ft.**

**M & R MACHINE**
**811 AIR WAY**
**GLENDALE, CA 91201**

**RCRA-SQG** **1000129209**
**FINDS** **CAD981368889**
**ECHO**

**Site 6 of 7 in cluster B**

**Relative:**
**Lower**

**Actual:**
**466 ft.**

RCRA-SQG:

| | |
|---|---|
| Date form received by agency: | 09/01/1996 |
| Facility name: | M & R MACHINE |
| Facility address: | 811 AIR WAY<br>GLENDALE, CA 91201 |
| EPA ID: | CAD981368889 |
| Mailing address: | AIR WAY<br>GLENDALE, CA 91201 |
| Contact: | Not reported |
| Contact address: | Not reported<br>Not reported |
| Contact country: | US |
| Contact telephone: | Not reported |
| Contact email: | Not reported |
| EPA Region: | 09 |

**M & R MACHINE (Continued)** **1000129209**

Classification: Small Small Quantity Generator
Description: Handler: generates more than 100 and less than 1000 kg of hazardous waste during any calendar month and accumulates less than 6000 kg of hazardous waste at any time; or generates 100 kg or less of hazardous waste during any calendar month, and accumulates more than 1000 kg of hazardous waste at any time

Owner/Operator Summary:
Owner/operator name: M & R MACHINE
Owner/operator address: NOT REQUIRED
NOT REQUIRED, ME 99999
Owner/operator country: Not reported
Owner/operator telephone: (415) 555-1212
Legal status: Private
Owner/Operator Type: Owner
Owner/Op start date: Not reported
Owner/Op end date: Not reported

Owner/operator name: NOT REQUIRED
Owner/operator address: NOT REQUIRED
NOT REQUIRED, ME 99999
Owner/operator country: Not reported
Owner/operator telephone: (415) 555-1212
Legal status: Private
Owner/Operator Type: Operator
Owner/Op start date: Not reported
Owner/Op end date: Not reported

Handler Activities Summary:
U.S. importer of hazardous waste: No
Mixed waste (haz. and radioactive): No
Recycler of hazardous waste: No
Transporter of hazardous waste: No
Treater, storer or disposer of HW: No
Underground injection activity: No
On-site burner exemption: No
Furnace exemption: No
Used oil fuel burner: No
Used oil processor: No
User oil refiner: No
Used oil fuel marketer to burner: No
Used oil Specification marketer: No
Used oil transfer facility: No
Used oil transporter: No

Historical Generators:
Date form received by agency: 09/01/1996
Site name: M & R MACHINE
Classification: Large Quantity Generator

Violation Status: No violations found

FINDS:

Registry ID: 110002682874

**M & R MACHINE (Continued)** **1000129209**

Environmental Interest/Information System
RCRAInfo is a national information system that supports the Resource Conservation and Recovery Act (RCRA) program through the tracking of events and activities related to facilities that generate, transport, and treat, store, or dispose of hazardous waste. RCRAInfo allows RCRA program staff to track the notification, permit, compliance, and corrective action activities required under RCRA.

ECHO:
Envid: 1000129209
Registry ID: 110002682874
DFR URL: http://echo.epa.gov/detailed_facility_report?fid=110002682874

---

**B22**
**NNW**
**< 1/8**
**0.021 mi.**
**112 ft.**

**M & R MACHINE INC.** **WIP** **S106767663**
**811 AIRWAY** **N/A**
**GLENDALE, CA 91201**

**Site 7 of 7 in cluster B**

**Relative:**
**Lower**

**Actual:**
**466 ft.**

WIP:
Region: 4
File Number: 109.0726
**File Status:** **Historical**
Staff: MH
Facility Suite: Not reported

---

**23**
**ESE**
**< 1/8**
**0.029 mi.**
**155 ft.**

**LUIGI' POTTERY & GARDEN WARE** **WIP** **S106767415**
**5630 SAN FERNANDO RD** **N/A**
**GLENDALE, CA 91203**

**Relative:**
**Lower**

**Actual:**
**454 ft.**

WIP:
Region: 4
File Number: 109.0050
**File Status:** **Historical**
Staff: TB
Facility Suite: Not reported

---

**C24**
**ENE**
**< 1/8**
**0.031 mi.**
**164 ft.**

**T C GULF SERVICE** **EDR Hist Auto** **1008993767**
**5700 SAN FERNANDO RD** **N/A**
**GLENDALE, CA**

**Site 1 of 4 in cluster C**

**Relative:**
**Higher**

**Actual:**
**470 ft.**

EDR Historical Auto Stations:
Name: GOLDEN EAGLE SERVICE
Year: 1955
Type: Not reported

Name: GOLDEN EAGLE SERVICE
Year: 1955
Type: GASOLINE STATIONS

**T C GULF SERVICE (Continued)** **1008993767**

Name: GOLDEN EAGLE SERVICE
Year: 1955
Type: GASOLINE STATIONS

Name: GOLDEN EAGLE SERVICE STATION
Year: 1957
Type: Not reported

Name: WILSHIRE SERVICE STATIONS
Year: 1964
Type: Not reported

Name: LEO'S WILSHIRE SERVICE
Year: 1964
Type: Not reported

Name: T C GULF SERVICE
Year: 1965
Type: Not reported

Name: T C GULF SERVICE
Year: 1965
Type: Not reported

Name: T C GULF SERVICE
Year: 1967
Type: GASOLINE STATIONS

Name: STANDARD OIL OF CALIFORNIA
Year: 1968
Type: Not reported

Name: PONDELLA LOU CHEVRON
Year: 1970
Type: Not reported

Name: PONDELLA LOU CHEVRON
Year: 1970
Type: Not reported

Name: MIKE S CHEVRON
Year: 1972
Type: GASOLINE STATIONS

Name: MIKE S CHEVRON
Year: 1972
Type: GASOLINE STATIONS

Name: BEGG MIKE & SONS CHEVRON SERVICE
Year: 1973
Type: Not reported

Name: STANDARD STATIONS INC
Year: 1977
Type: Not reported

**C25 ENE < 1/8 0.031 mi. 164 ft.** | **99174 5700 SAN FERNANDO RD GLENDALE, CA 91202** | **HIST UST** | **U001566869 N/A**

**Site 2 of 4 in cluster C**

**Relative: Higher**

**Actual: 470 ft.**

HIST UST:

| | |
|---|---|
| File Number: | 00026ED8 |
| URL: | http://geotracker.waterboards.ca.gov/ustpdfs/pdf/00026ED8.pdf |
| Region: | STATE |
| Facility ID: | 00000063190 |
| Facility Type: | Gas Station |
| Other Type: | Not reported |
| Contact Name: | KEMANJIOGHOU,MIKAEL |
| Telephone: | 8182411369 |
| Owner Name: | CHEVRON U.S.A. INC. |
| Owner Address: | 575 MARKET |
| Owner City,St,Zip: | SAN FRANCISCO, CA 94105 |
| Total Tanks: | 0004 |
| | |
| Tank Num: | 001 |
| Container Num: | 1 |
| Year Installed: | 1968 |
| Tank Capacity: | 00005000 |
| Tank Used for: | PRODUCT |
| Type of Fuel: | Not reported |
| Container Construction Thickness: | 0000250 |
| Leak Detection: | Stock Inventor |
| | |
| Tank Num: | 002 |
| Container Num: | 2 |
| Year Installed: | 1968 |
| Tank Capacity: | 00010000 |
| Tank Used for: | PRODUCT |
| Type of Fuel: | Not reported |
| Container Construction Thickness: | 0000250 |
| Leak Detection: | Stock Inventor |
| | |
| Tank Num: | 003 |
| Container Num: | 3 |
| Year Installed: | 1968 |
| Tank Capacity: | 00010000 |
| Tank Used for: | PRODUCT |
| Type of Fuel: | Not reported |
| Container Construction Thickness: | 0000250 |
| Leak Detection: | Stock Inventor |
| | |
| Tank Num: | 004 |
| Container Num: | 4 |
| Year Installed: | 1968 |
| Tank Capacity: | 00001000 |
| Tank Used for: | WASTE |
| Type of Fuel: | Not reported |
| Container Construction Thickness: | 0000130 |
| Leak Detection: | Stock Inventor |

Click here for Geo Tracker PDF:

**C26**
**NE**
**< 1/8**
**0.032 mi.**
**169 ft.**

**KING FISH AUTO LAUNDRIES INC**
**5720 SAN FERNANDO RD**
**GLENDALE, CA**

**Site 3 of 4 in cluster C**

**EDR Hist Auto** **1009049588**
**N/A**

**Relative:**
**Higher**

**Actual:**
**471 ft.**

EDR Historical Auto Stations:

| | |
|---|---|
| Name: | KING FISH AUTO LAUNDRIES INC |
| Year: | 1951 |
| Type: | AUTOMOBILE LAUNDRIES |

---

**C27**
**NE**
**< 1/8**
**0.032 mi.**
**169 ft.**

**GALLERIA CAR WASH**
**5720 SAN FERNANDO RD**
**GLENDALE, CA 91202**

**Site 4 of 4 in cluster C**

**WIP** **S106767416**
**N/A**

**Relative:**
**Higher**

**Actual:**
**471 ft.**

WIP:

| | |
|---|---|
| Region: | 4 |
| File Number: | 109.0051 |
| **File Status:** | **Historical** |
| Staff: | WS |
| Facility Suite: | Not reported |

---

**D28**
**NNE**
**< 1/8**
**0.033 mi.**
**174 ft.**

**HALL S UNION SERVICE**
**5744 SAN FERNANDO RD**
**GLENDALE, CA**

**Site 1 of 7 in cluster D**

**EDR Hist Auto** **1008993591**
**N/A**

**Relative:**
**Higher**

**Actual:**
**472 ft.**

EDR Historical Auto Stations:

| | |
|---|---|
| Name: | HARRY & ED S SERVICE |
| Year: | 1945 |
| Type: | AUTO SERVICE STATIONS GASOLINE AND OIL |
| Name: | HARRY & ED S SERVICE |
| Year: | 1945 |
| Type: | AUTO SERVICE STATIONS GASOLINE AND OIL |
| Name: | HALL S UNION SERVICE |
| Year: | 1955 |
| Type: | GASOLINE STATIONS |
| Name: | HALL'S UNION SERVICE |
| Year: | 1955 |
| Type: | Not reported |
| Name: | HALL S UNION SERVICE |
| Year: | 1955 |
| Type: | GASOLINE STATIONS |
| Name: | HALL'S BOB UNION SERVICE |
| Year: | 1957 |
| Type: | Not reported |
| Name: | HALL'S BOB UNION SERVICE |
| Year: | 1957 |
| Type: | Not reported |

**HALL S UNION SERVICE (Continued)** **1008993591**

Name: HALL'S BOB UNION SERVICE
Year: 1957
Type: Not reported

Name: HALL'S BOB UNION SERVICE
Year: 1957
Type: Not reported

Name: HALL'S BOB UNION SERVICE
Year: 1957
Type: Not reported

Name: HALL'S BOB UNION SERVICE
Year: 1957
Type: Not reported

Name: HALL'S BOB UNION SERVICE
Year: 1957
Type: Not reported

Name: HALL S BOB UNION SERVICE
Year: 1960
Type: GAS STATIONS

Name: HALL S BOB UNION SERVICE
Year: 1960
Type: GAS STATIONS

Name: BALL'S BOB UNION SERVICE
Year: 1964
Type: Not reported

Name: HALL S BOB UNION SERVICE
Year: 1967
Type: GASOLINE STATIONS

Name: HALL S BOB UNION SERVICE
Year: 1972
Type: GASOLINE STATIONS

Name: HALL S BOB UNION SERVICE
Year: 1972
Type: GASOLINE STATIONS

---

**D29** **GRAYSON POWER PLANT** **LUST** **S100356400**
**NNE** **5750 SAN FERNANDO RD** **HIST CORTESE** **N/A**
**< 1/8** **GLENDALE, CA 91203**
**0.037 mi.**
**193 ft.** **Site 2 of 7 in cluster D**

**Relative:**
**Higher**

**Actual:**
**472 ft.**

LUST:
Region: STATE
Global Id: T0603702041
Latitude: 34.1561071
Longitude: -118.2768301
Case Type: LUST Cleanup Site
Status: Completed - Case Closed
Status Date: 07/23/1996

**GRAYSON POWER PLANT (Continued)** **S100356400**

| | |
|---|---|
| Lead Agency: | LOS ANGELES RWQCB (REGION 4) |
| Case Worker: | YR |
| Local Agency: | GLENDALE, CITY OF |
| RB Case Number: | 912030016 |
| LOC Case Number: | Not reported |
| File Location: | Not reported |
| Potential Media Affect: | Soil |
| Potential Contaminants of Concern: | Heating Oil / Fuel Oil |
| Site History: | Not reported |

Click here to access the California GeoTracker records for this facility:

Contact:

| | |
|---|---|
| Global Id: | T0603702041 |
| Contact Type: | Local Agency Caseworker |
| Contact Name: | UNK |
| Organization Name: | GLENDALE, CITY OF |
| Address: | Not reported |
| City: | r4 UNKNOWN |
| Email: | Not reported |
| Phone Number: | Not reported |

| | |
|---|---|
| Global Id: | T0603702041 |
| Contact Type: | Regional Board Caseworker |
| Contact Name: | YUE RONG |
| Organization Name: | LOS ANGELES RWQCB (REGION 4) |
| Address: | 320 W. 4TH ST., SUITE 200 |
| City: | Los Angeles |
| Email: | yrong@waterboards.ca.gov |
| Phone Number: | Not reported |

Status History:

| | |
|---|---|
| Global Id: | T0603702041 |
| Status: | Completed - Case Closed |
| Status Date: | 07/23/1996 |

| | |
|---|---|
| Global Id: | T0603702041 |
| Status: | Open - Case Begin Date |
| Status Date: | 02/17/1988 |

| | |
|---|---|
| Global Id: | T0603702041 |
| Status: | Open - Site Assessment |
| Status Date: | 03/18/1988 |

Regulatory Activities:

| | |
|---|---|
| Global Id: | T0603702041 |
| Action Type: | Other |
| Date: | 02/17/1988 |
| Action: | Leak Reported |

LUST REG 4:

| | |
|---|---|
| Region: | 4 |
| Regional Board: | 04 |
| County: | Los Angeles |
| Facility Id: | 912030016 |

**GRAYSON POWER PLANT (Continued)** **S100356400**

| | | |
|---|---|---|
| Status: | Case Closed | |
| Substance: | #6 Fuel Oil | |
| Substance Quantity: | Not reported | |
| Local Case No: | Not reported | |
| Case Type: | Soil | |
| Abatement Method Used at the Site: | | Not reported |
| Global ID: | T0603702041 | |
| W Global ID: | Not reported | |
| Staff: | UNK | |
| Local Agency: | 19070 | |
| Cross Street: | HIGHLAND | |
| Enforcement Type: | Not reported | |
| Date Leak Discovered: | Not reported | |
| Date Leak First Reported: | | 2/17/1988 |
| Date Leak Record Entered: | 3/7/1988 | |
| Date Confirmation Began: | Not reported | |
| Date Leak Stopped: | Not reported | |
| Date Case Last Changed on Database: | | 12/12/1988 |
| Date the Case was Closed: | | 7/23/1996 |
| How Leak Discovered: | Not reported | |
| How Leak Stopped: | Not reported | |
| Cause of Leak: | Not reported | |
| Leak Source: | Not reported | |
| Operator: | Not reported | |
| Water System: | Not reported | |
| Well Name: | Not reported | |
| Approx. Dist To Production Well (ft): | | 2447.1634020782178410391122805 |
| Source of Cleanup Funding: | | Not reported |
| Preliminary Site Assessment Workplan Submitted: | | Not reported |
| Preliminary Site Assessment Began: | | Not reported |
| Pollution Characterization Began: | | 3/18/1988 |
| Remediation Plan Submitted: | | Not reported |
| Remedial Action Underway: | | Not reported |
| Post Remedial Action Monitoring Began: | | Not reported |
| Enforcement Action Date: | | Not reported |
| Historical Max MTBE Date: | | Not reported |
| Hist Max MTBE Conc in Groundwater: | | Not reported |
| Hist Max MTBE Conc in Soil: | | Not reported |
| Significant Interim Remedial Action Taken: | | Not reported |
| GW Qualifier: | Not reported | |
| Soil Qualifier: | Not reported | |
| Organization: | Not reported | |
| Owner Contact: | Not reported | |
| Responsible Party: | CITY OF GLENDALE | |
| RP Address: | 141 N GLENDALE AVE, GLENDALE CA 91206 | |
| Program: | LUST | |
| Lat/Long: | 34.1561071 / -1 | |
| Local Agency Staff: | UNK | |
| Beneficial Use: | Not reported | |
| Priority: | Not reported | |
| Cleanup Fund Id: | Not reported | |
| Suspended: | Not reported | |
| Assigned Name: | Not reported | |
| Summary: | Not reported | |

HIST CORTESE:

| | |
|---|---|
| Region: | CORTESE |

**GRAYSON POWER PLANT (Continued)** **S100356400**

Facility County Code: 19
Reg By: LTNKA
Reg Id: 912030016

---

**D30** **BARGAIN GAS** **HIST UST** **U001566870**
**North** **5800 SAN FERNANDO RD** **N/A**
**< 1/8** **GLENDALE, CA 91202**
**0.051 mi.**
**268 ft.** **Site 3 of 7 in cluster D**

**Relative:**
**Higher**

**Actual:**
**472 ft.**

HIST UST:
File Number: 00027401
URL: http://geotracker.waterboards.ca.gov/ustpdfs/pdf/00027401.pdf
Region: STATE
Facility ID: 00000016930
Facility Type: Gas Station
Other Type: Not reported
Contact Name: KYONG S CHANG
Telephone: 8182414997
Owner Name: KYONG S CHANG
Owner Address: 5800 SAN FERNANDO RD
Owner City,St,Zip: GLENDALE, CA 91202
Total Tanks: 0005

Tank Num: 001
Container Num: 5
Year Installed: Not reported
Tank Capacity: 00000200
Tank Used for: WASTE
Type of Fuel: WASTE OIL
Container Construction Thickness: Not reported
Leak Detection: Pressure Test

Tank Num: 002
Container Num: 3
Year Installed: Not reported
Tank Capacity: 00010000
Tank Used for: PRODUCT
Type of Fuel: DIESEL
Container Construction Thickness: Not reported
Leak Detection: Stock Inventor, Pressure Test

Tank Num: 003
Container Num: 2
Year Installed: Not reported
Tank Capacity: 00010000
Tank Used for: PRODUCT
Type of Fuel: UNLEADED
Container Construction Thickness: Not reported
Leak Detection: Stock Inventor, Pressure Test

Tank Num: 004
Container Num: 1
Year Installed: Not reported
Tank Capacity: 00010000
Tank Used for: PRODUCT
Type of Fuel: REGULAR
Container Construction Thickness: Not reported

**BARGAIN GAS (Continued)** **U001566870**

Leak Detection: Stock Inventor, Pressure Test

Tank Num: 005
Container Num: 4
Year Installed: 1984
Tank Capacity: 00005000
Tank Used for: PRODUCT
Type of Fuel: PREMIUM
Container Construction Thickness: Not reported
Leak Detection: Stock Inventor, Pressure Test

Click here for Geo Tracker PDF:

---

**D31 North < 1/8 0.051 mi. 268 ft.** | **HIGHLAND ARCO** | **LUST** | **S103950386**
**5800 SAN FERNANDO** | **HIST CORTESE** | **N/A**
**GLENDALE, CA 91202**

**Site 4 of 7 in cluster D**

**Relative: Higher**

**Actual: 472 ft.**

LUST:

Region: STATE
Global Id: T0603702040
Latitude: 34.157342
Longitude: -118.277544
Case Type: LUST Cleanup Site
Status: Completed - Case Closed
Status Date: 06/07/2000
Lead Agency: GLENDALE, CITY OF
Case Worker: UNK
Local Agency: GLENDALE, CITY OF
RB Case Number: 912020034
LOC Case Number: Not reported
File Location: Not reported
Potential Media Affect: Soil
Potential Contaminants of Concern: Gasoline
Site History: Not reported

Click here to access the California GeoTracker records for this facility:

Contact:

Global Id: T0603702040
Contact Type: Local Agency Caseworker
Contact Name: UNK
Organization Name: GLENDALE, CITY OF
Address: Not reported
City: r4 UNKNOWN
Email: Not reported
Phone Number: Not reported

Global Id: T0603702040
Contact Type: Regional Board Caseworker
Contact Name: YUE RONG
Organization Name: LOS ANGELES RWQCB (REGION 4)
Address: 320 W. 4TH ST., SUITE 200
City: Los Angeles
Email: yrong@waterboards.ca.gov
Phone Number: Not reported

**HIGHLAND ARCO (Continued)** **S103950386**

Status History:

| | |
|---|---|
| Global Id: | T0603702040 |
| Status: | Completed - Case Closed |
| Status Date: | 06/07/2000 |
| Global Id: | T0603702040 |
| Status: | Open - Case Begin Date |
| Status Date: | 10/30/1998 |
| Global Id: | T0603702040 |
| Status: | Open - Site Assessment |
| Status Date: | 03/01/2000 |

Regulatory Activities:

| | |
|---|---|
| Global Id: | T0603702040 |
| Action Type: | Other |
| Date: | 10/30/1998 |
| Action: | Leak Discovery |
| Global Id: | T0603702040 |
| Action Type: | Other |
| Date: | 03/01/2000 |
| Action: | Leak Reported |
| Global Id: | T0603702040 |
| Action Type: | Other |
| Date: | 10/30/1998 |
| Action: | Leak Stopped |

HIST CORTESE:

| | |
|---|---|
| Region: | CORTESE |
| Facility County Code: | 19 |
| Reg By: | LTNKA |
| Reg Id: | 912020034 |

---

**D32** **EMILIO S GULF SERVICE** **EDR Hist Auto** **1008993655**
**North** **5800 SAN FERNANDO RD** **N/A**
**< 1/8** **GLENDALE, CA**
**0.051 mi.**
**268 ft.** **Site 5 of 7 in cluster D**

**Relative:**
**Higher**

**Actual:**
**472 ft.**

EDR Historical Auto Stations:

| | |
|---|---|
| Name: | JOHHNIE'S GULF SERVICE |
| Year: | 1970 |
| Type: | Not reported |
| Name: | EMILIO'S GULF SERVICE |
| Year: | 1971 |
| Type: | Not reported |
| Name: | EMILIO'S GULF SERVICE |
| Year: | 1971 |
| Type: | Not reported |
| Name: | EMILIO'S GULF SERVICE |

**EMILIO S GULF SERVICE (Continued)** **1008993655**

Year: 1971
Type: Not reported

Name: EMILIO S GULF SERVICE
Year: 1972
Type: GASOLINE STATIONS

Name: EMILIO S GULF SERVICE
Year: 1972
Type: GASOLINE STATIONS

Name: APEX AUTO REPAIR
Year: 1999
Address: 5800 SAN FERNANDO RD

Name: ARCO SMOGPRO
Year: 2001
Address: 5800 SAN FERNANDO RD

Name: ARCO SMOGPRO
Year: 2002
Address: 5800 SAN FERNANDO RD

Name: HIGHLAND ARCO SMOG
Year: 2003
Address: 5800 SAN FERNANDO RD

Name: HIGHLAND ARCO SMOG CHK
Year: 2004
Address: 5800 SAN FERNANDO RD

Name: ARCO SMOGPRO
Year: 2005
Address: 5800 SAN FERNANDO RD

Name: ARCO HIGHLAND PETROLEUM INC
Year: 2006
Address: 5800 SAN FERNANDO RD

Name: ARCO HIGHLAND PETROLEUM INC
Year: 2007
Address: 5800 SAN FERNANDO RD

Name: KEVINS AUTO SERVICE CENTER
Year: 2008
Address: 5800 SAN FERNANDO RD

Name: KEVINS AUTO SERVICE CENTER
Year: 2009
Address: 5800 SAN FERNANDO RD

Name: HIGHLAND ARCO SMOG CHECK
Year: 2010
Address: 5800 SAN FERNANDO RD

Name: SAMS AUTO REPAIR
Year: 2011

**EMILIO S GULF SERVICE (Continued)** **1008993655**

Address: 5800 SAN FERNANDO RD

Name: HIGHLAND ARCO SMOG CHK
Year: 2012
Address: 5800 SAN FERNANDO RD

---

**D33 North < 1/8 0.051 mi. 268 ft.** | **FORMER EMILIO'S AUTO/APEX AUTO** | **LUST** | **S104406366**
**5800 SAN FERNANDO RD** | **WIP** | **N/A**
**GLENDALE, CA 91202**

**Site 6 of 7 in cluster D**

**Relative: Higher**

**Actual: 472 ft.**

LUST REG 4:

| | |
|---|---|
| Region: | 4 |
| Regional Board: | 04 |
| County: | Los Angeles |
| Facility Id: | 912020034 |
| Status: | Preliminary site assessment workplan submitted |
| Substance: | Gasoline |
| Substance Quantity: | Not reported |
| Local Case No: | Not reported |
| Case Type: | Soil |
| Abatement Method Used at the Site: | Vent Soil |
| Global ID: | T0603702040 |
| W Global ID: | Not reported |
| Staff: | UNK |
| Local Agency: | 19070 |
| Cross Street: | HIGHLAND |
| Enforcement Type: | Not reported |
| Date Leak Discovered: | 10/30/1998 |
| Date Leak First Reported: | 3/1/2000 |
| Date Leak Record Entered: | Not reported |
| Date Confirmation Began: | Not reported |
| Date Leak Stopped: | 10/30/1998 |
| Date Case Last Changed on Database: | 3/1/2000 |
| Date the Case was Closed: | Not reported |
| How Leak Discovered: | Repair Tank |
| How Leak Stopped: | Not reported |
| Cause of Leak: | Overfill |
| Leak Source: | Piping |
| Operator: | DANNY KOHANOF |
| Water System: | Not reported |
| Well Name: | Not reported |
| Approx. Dist To Production Well (ft): | 2085.7650900779719598880957547 |
| Source of Cleanup Funding: | Piping |
| Preliminary Site Assessment Workplan Submitted: | 3/1/2000 |
| Preliminary Site Assessment Began: | Not reported |
| Pollution Characterization Began: | Not reported |
| Remediation Plan Submitted: | Not reported |
| Remedial Action Underway: | Not reported |
| Post Remedial Action Monitoring Began: | Not reported |
| Enforcement Action Date: | Not reported |
| Historical Max MTBE Date: | Not reported |
| Hist Max MTBE Conc in Groundwater: | Not reported |
| Hist Max MTBE Conc in Soil: | Not reported |
| Significant Interim Remedial Action Taken: | Not reported |
| GW Qualifier: | Not reported |
| Soil Qualifier: | Not reported |

**FORMER EMILIO'S AUTO/APEX AUTO (Continued)** **S104406366**

| | |
|---|---|
| Organization: | Not reported |
| Owner Contact: | Not reported |
| Responsible Party: | DANNY KOHANOF |
| RP Address: | 5800 SAN FERNANDO RD., GLENDALE, CA 91202 |
| Program: | LUST |
| Lat/Long: | 34.156988 / -1 |
| Local Agency Staff: | UNK |
| Beneficial Use: | Not reported |
| Priority: | Not reported |
| Cleanup Fund Id: | Not reported |
| Suspended: | Not reported |
| Assigned Name: | Not reported |
| Summary: | Not reported |

WIP:

| | |
|---|---|
| Region: | 4 |
| File Number: | 109.0052 |
| **File Status:** | **Historical** |
| Staff: | KLEE |
| Facility Suite: | Not reported |

---

**D34**
**North**
**< 1/8**
**0.051 mi.**
**268 ft.**

**BARGIN GAS** **SWEEPS UST** **S102060307**
**5800 SAN FERNANDO RD** **LOS ANGELES CO. HMS** **N/A**
**GLENDALE, CA 91202**

**Site 7 of 7 in cluster D**

**Relative:**
**Higher**

**Actual:**
**472 ft.**

SWEEPS UST:

| | |
|---|---|
| Status: | Active |
| Comp Number: | 12625 |
| Number: | 2 |
| Board Of Equalization: | Not reported |
| Referral Date: | 08-06-91 |
| Action Date: | 08-06-91 |
| Created Date: | 06-30-89 |
| Owner Tank Id: | Not reported |
| SWRCB Tank Id: | 19-070-012625-000001 |
| Tank Status: | A |
| Capacity: | 10000 |
| Active Date: | 08-06-91 |
| Tank Use: | M.V. FUEL |
| STG: | P |
| Content: | LEADED |
| Number Of Tanks: | 4 |

| | |
|---|---|
| Status: | Active |
| Comp Number: | 12625 |
| Number: | 2 |
| Board Of Equalization: | Not reported |
| Referral Date: | 08-06-91 |
| Action Date: | 08-06-91 |
| Created Date: | 06-30-89 |
| Owner Tank Id: | Not reported |
| SWRCB Tank Id: | 19-070-012625-000002 |
| Tank Status: | A |
| Capacity: | 5000 |
| Active Date: | 08-06-91 |

**BARGIN GAS (Continued)** **S102060307**

Tank Use: M.V. FUEL
STG: P
Content: REG UNLEADED
Number Of Tanks: Not reported

Status: Active
Comp Number: 12625
Number: 2
Board Of Equalization: Not reported
Referral Date: 08-06-91
Action Date: 08-06-91
Created Date: 06-30-89
Owner Tank Id: Not reported
SWRCB Tank Id: 19-070-012625-000003
Tank Status: A
Capacity: 10000
Active Date: 08-06-91
Tank Use: M.V. FUEL
STG: P
Content: DIESEL
Number Of Tanks: Not reported

Status: Active
Comp Number: 12625
Number: 2
Board Of Equalization: Not reported
Referral Date: 08-06-91
Action Date: 08-06-91
Created Date: 06-30-89
Owner Tank Id: Not reported
SWRCB Tank Id: 19-070-012625-000004
Tank Status: A
Capacity: 10000
Active Date: 08-06-91
Tank Use: M.V. FUEL
STG: P
Content: REG UNLEADED
Number Of Tanks: Not reported

LOS ANGELES CO. HMS:
Region: LA
Permit Category: T
Facility Id: 012472-012625
Facility Type: 0
Facility Status: Removed
Area: 3D
Permit Number: 00005534T
Permit Status: Removed

**E35 North < 1/8 0.054 mi. 285 ft.** | **ARMSTRONG GARDEN CENTER**
**5816 SAN FERNANDO RD.**
**GLENDALE, CA 91203**

**SLIC ENF WIP** | **S106484725 N/A**

**Site 1 of 5 in cluster E**

**Relative: Higher**

**Actual: 471 ft.**

SLIC:

| | |
|---|---|
| Region: | STATE |
| **Facility Status:** | **Completed - Case Closed** |
| Status Date: | 12/22/2014 |
| Global Id: | SL603798926 |
| Lead Agency: | LOS ANGELES RWQCB (REGION 4) |
| Lead Agency Case Number: | Not reported |
| Latitude: | 34.156803 |
| Longitude: | -118.276593 |
| Case Type: | Cleanup Program Site |
| Case Worker: | GJH |
| Local Agency: | Not reported |
| RB Case Number: | 109.0053 |
| File Location: | Not reported |
| Potential Media Affected: | Aquifer used for drinking water supply |
| Potential Contaminants of Concern: | Not reported |
| Site History: | Not reported |

Click here to access the California GeoTracker records for this facility:

ENF:

| | |
|---|---|
| Region: | 4 |
| Facility Id: | 206360 |
| Agency Name: | Armstrong Garden Centers Inc |
| Place Type: | Facility |
| Place Subtype: | Not reported |
| Facility Type: | Not reported |
| Agency Type: | Privately-Owned Business |
| # Of Agencies: | 1 |
| Place Latitude: | Not reported |
| Place Longitude: | Not reported |
| SIC Code 1: | Not reported |
| SIC Desc 1: | Not reported |
| SIC Code 2: | Not reported |
| SIC Desc 2: | Not reported |
| SIC Code 3: | Not reported |
| SIC Desc 3: | Not reported |
| NAICS Code 1: | Not reported |
| NAICS Desc 1: | Not reported |
| NAICS Code 2: | Not reported |
| NAICS Desc 2: | Not reported |
| NAICS Code 3: | Not reported |
| NAICS Desc 3: | Not reported |
| # Of Places: | 1 |
| Source Of Facility: | Reg Meas |
| Design Flow: | Not reported |
| Threat To Water Quality: | Not reported |
| Complexity: | Not reported |
| Pretreatment: | Not reported |
| Facility Waste Type: | Not reported |
| Facility Waste Type 2: | Not reported |
| Facility Waste Type 3: | Not reported |
| Facility Waste Type 4: | Not reported |

**ARMSTRONG GARDEN CENTER (Continued)** **S106484725**

| | |
|---|---|
| Program: | WIP |
| Program Category1: | MONITORING |
| Program Category2: | MONITORING |
| # Of Programs: | 1 |
| WDID: | 4WIP1090053 |
| Reg Measure Id: | 154082 |
| Reg Measure Type: | Unregulated |
| Region: | 4 |
| Order #: | Not reported |
| Npdes# CA#: | Not reported |
| Major-Minor: | Not reported |
| Npdes Type: | Not reported |
| Reclamation: | Not reported |
| Dredge Fill Fee: | Not reported |
| 301H: | Not reported |
| Application Fee Amt Received: | Not reported |
| Status: | Historical |
| Status Date: | 06/17/2005 |
| Effective Date: | Not reported |
| Expiration/Review Date: | Not reported |
| Termination Date: | Not reported |
| WDR Review - Amend: | Not reported |
| WDR Review - Revise/Renew: | Not reported |
| WDR Review - Rescind: | Not reported |
| WDR Review - No Action Required: | Not reported |
| WDR Review - Pending: | Not reported |
| WDR Review - Planned: | Not reported |
| Status Enrollee: | N |
| Individual/General: | Not reported |
| Fee Code: | Not reported |
| Direction/Voice: | Passive |
| Enforcement Id(EID): | 221150 |
| Region: | 4 |
| Order / Resolution Number: | 13267 Letter |
| Enforcement Action Type: | 13267 Letter |
| Effective Date: | 11/09/2000 |
| Adoption/Issuance Date: | Not reported |
| Achieve Date: | Not reported |
| Termination Date: | 11/09/2000 |
| ACL Issuance Date: | Not reported |
| EPL Issuance Date: | Not reported |
| Status: | Historical |
| Title: | Enforcement - 4WIP1090053 |
| Description: | Not reported |
| Program: | WIP |
| Latest Milestone Completion Date: | Not reported |
| # Of Programs1: | 1 |
| Total Assessment Amount: | $0.00 |
| Initial Assessed Amount: | $0.00 |
| Liability $ Amount: | $0.00 |
| Project $ Amount: | $0.00 |
| Liability $ Paid: | $0.00 |
| Project $ Completed: | $0.00 |
| Total $ Paid/Completed Amount: | $0.00 |

WIP:
Region: 4

**ARMSTRONG GARDEN CENTER (Continued)** **S106484725**

File Number: 109.0053
**File Status: Backlog**
Staff: UNIDENTIFIED
Facility Suite: Not reported

---

**36**
**NNW**
**< 1/8**
**0.059 mi.**
**310 ft.**

**AUDERCO CARPET**
**847 AIRWAY**
**GLENDALE, CA 91201**

**ENF** **S106768137**
**WIP** **N/A**

**Relative:**
**Lower**

**Actual:**
**464 ft.**

ENF:

| | |
|---|---|
| Region: | 4 |
| Facility Id: | 206734 |
| Agency Name: | Auderco Carpet |
| Place Type: | Facility |
| Place Subtype: | Not reported |
| Facility Type: | Not reported |
| Agency Type: | Privately-Owned Business |
| # Of Agencies: | 1 |
| Place Latitude: | Not reported |
| Place Longitude: | Not reported |
| SIC Code 1: | Not reported |
| SIC Desc 1: | Not reported |
| SIC Code 2: | Not reported |
| SIC Desc 2: | Not reported |
| SIC Code 3: | Not reported |
| SIC Desc 3: | Not reported |
| NAICS Code 1: | Not reported |
| NAICS Desc 1: | Not reported |
| NAICS Code 2: | Not reported |
| NAICS Desc 2: | Not reported |
| NAICS Code 3: | Not reported |
| NAICS Desc 3: | Not reported |
| # Of Places: | 1 |
| Source Of Facility: | Reg Meas |
| Design Flow: | Not reported |
| Threat To Water Quality: | Not reported |
| Complexity: | Not reported |
| Pretreatment: | Not reported |
| Facility Waste Type: | Not reported |
| Facility Waste Type 2: | Not reported |
| Facility Waste Type 3: | Not reported |
| Facility Waste Type 4: | Not reported |
| Program: | WIP |
| Program Category1: | MONITORING |
| Program Category2: | MONITORING |
| # Of Programs: | 1 |
| WDID: | 4WIP1096707 |
| Reg Measure Id: | 158114 |
| Reg Measure Type: | Unregulated |
| Region: | 4 |
| Order #: | Not reported |
| Npdes# CA#: | Not reported |
| Major-Minor: | Not reported |
| Npdes Type: | Not reported |
| Reclamation: | Not reported |
| Dredge Fill Fee: | Not reported |

**AUDERCO CARPET (Continued)** **S106768137**

| | |
|---|---|
| 301H: | Not reported |
| Application Fee Amt Received: | Not reported |
| Status: | Historical |
| Status Date: | 06/17/2005 |
| Effective Date: | Not reported |
| Expiration/Review Date: | Not reported |
| Termination Date: | Not reported |
| WDR Review - Amend: | Not reported |
| WDR Review - Revise/Renew: | Not reported |
| WDR Review - Rescind: | Not reported |
| WDR Review - No Action Required: | Not reported |
| WDR Review - Pending: | Not reported |
| WDR Review - Planned: | Not reported |
| Status Enrollee: | N |
| Individual/General: | Not reported |
| Fee Code: | Not reported |
| Direction/Voice: | Passive |
| Enforcement Id(EID): | 226071 |
| Region: | 4 |
| Order / Resolution Number: | LT940120 |
| Enforcement Action Type: | 13267 Letter |
| Effective Date: | 01/20/1994 |
| Adoption/Issuance Date: | Not reported |
| Achieve Date: | Not reported |
| Termination Date: | Not reported |
| ACL Issuance Date: | Not reported |
| EPL Issuance Date: | Not reported |
| Status: | Historical |
| Title: | Enforcement - 4WIP1096707 |
| Description: | Not reported |
| Program: | WIP |
| Latest Milestone Completion Date: | Not reported |
| # Of Programs1: | 1 |
| Total Assessment Amount: | $0.00 |
| Initial Assessed Amount: | $0.00 |
| Liability $ Amount: | $0.00 |
| Project $ Amount: | $0.00 |
| Liability $ Paid: | $0.00 |
| Project $ Completed: | $0.00 |
| Total $ Paid/Completed Amount: | $0.00 |

WIP:

| | |
|---|---|
| Region: | 4 |
| File Number: | 109.6707 |
| **File Status:** | **Historical** |
| Staff: | MH |
| Facility Suite: | Not reported |

**E37**
**North**
**< 1/8**
**0.070 mi.**
**371 ft.**

**JAMES R. TIPPS**
**5830 SAN FERNANDO RD**
**GLENDALE, CA 91201**

**WIP** **S106767418**
**N/A**

**Site 2 of 5 in cluster E**

**Relative:**
**Higher**

**Actual:**
**468 ft.**

WIP:

| | |
|---|---|
| Region: | 4 |
| File Number: | 109.0055 |
| **File Status:** | **Historical** |
| Staff: | MH |
| Facility Suite: | Not reported |

---

**E38**
**North**
**< 1/8**
**0.070 mi.**
**371 ft.**

**5830 SAN FERNANDO RD**
**GLENDALE, CA 91202**

**EDR Hist Auto** **1015561471**
**N/A**

**Site 3 of 5 in cluster E**

**Relative:**
**Higher**

**Actual:**
**468 ft.**

EDR Historical Auto Stations:

| | |
|---|---|
| Name: | SPEEDY AUTO REPAIR |
| Year: | 2002 |
| Address: | 5830 SAN FERNANDO RD |
| Name: | SPEEDY AUTO REPAIR |
| Year: | 2003 |
| Address: | 5830 SAN FERNANDO RD |
| Name: | HIGHL & AUTOMOTIVE |
| Year: | 2004 |
| Address: | 5830 SAN FERNANDO RD |
| Name: | HIGHLAND AUTOMOTIVE |
| Year: | 2005 |
| Address: | 5830 SAN FERNANDO RD |
| Name: | HIGHLAND AUTOMOTIVE |
| Year: | 2009 |
| Address: | 5830 SAN FERNANDO RD |
| Name: | HIGHLAND AUTOMOTIVE |
| Year: | 2010 |
| Address: | 5830 SAN FERNANDO RD |
| Name: | HIGHLAND AUTOMOTIVE |
| Year: | 2011 |
| Address: | 5830 SAN FERNANDO RD |
| Name: | HIGHLAND AUTOMOTIVE |
| Year: | 2012 |
| Address: | 5830 SAN FERNANDO RD |

**F39**
**North**
**< 1/8**
**0.085 mi.**
**447 ft.**

**CONTEMPORARY COMPUTER TECHNOLO**
**5838 SAN FERNANDO RD**
**GLENDALE, CA 91201**

**WIP** **S106767420**
**N/A**

**Site 1 of 7 in cluster F**

**Relative:**
**Higher**

**Actual:**
**468 ft.**

WIP:
Region: 4
File Number: 109.0057
**File Status:** **Historical**
Staff: MH
Facility Suite: D

---

**F40**
**North**
**< 1/8**
**0.085 mi.**
**447 ft.**

**CONTEMPORAY COMPUTER INC.**
**5838 SAN FERNANDO RD**
**GLENDALE, CA 91201**

**WIP** **S106767421**
**N/A**

**Site 2 of 7 in cluster F**

**Relative:**
**Higher**

**Actual:**
**468 ft.**

WIP:
Region: 4
File Number: 109.0058
**File Status:** **Historical**
Staff: MH
Facility Suite: E

---

**F41**
**North**
**< 1/8**
**0.085 mi.**
**447 ft.**

**MD PRINTING (FORMERLY V.S.P.CO**
**5838 SAN FERNANDO RD**
**GLENDALE, CA 91202**

**WIP** **S106767419**
**N/A**

**Site 3 of 7 in cluster F**

**Relative:**
**Higher**

**Actual:**
**468 ft.**

WIP:
Region: 4
File Number: 109.0056
**File Status:** **Historical**
Staff: TB
Facility Suite: C

---

**F42**
**North**
**< 1/8**
**0.085 mi.**
**447 ft.**

**LOVE GIFT INTER LTD/FORMER GVO**
**5838 SAN FERNANDO RD**
**GLENDALE, CA 91202**

**WIP** **S106767422**
**N/A**

**Site 4 of 7 in cluster F**

**Relative:**
**Higher**

**Actual:**
**468 ft.**

WIP:
Region: 4
File Number: 109.0059
**File Status:** **Historical**
Staff: KLEE
Facility Suite: A

**F43** **R-SQUARED SCAN SYSTEMS** **WIP** **S106767423**
**North** **5838 SAN FERNANDO RD** **N/A**
**< 1/8** **GLENDALE, CA 91202**
**0.085 mi.**
**447 ft.** **Site 5 of 7 in cluster F**

**Relative:**
**Higher**

**Actual:**
**468 ft.**

WIP:

| | |
|---|---|
| Region: | 4 |
| File Number: | 109.0060 |
| **File Status:** | **Historical** |
| Staff: | KLEE |
| Facility Suite: | B |

---

**E44** **GLENDALE TRANSMISSION EXCHANGE** **EDR Hist Auto** **1009013587**
**North** **5832 SAN FERNANDO RD** **N/A**
**< 1/8** **GLENDALE, CA**
**0.087 mi.**
**462 ft.** **Site 4 of 5 in cluster E**

**Relative:**
**Higher**

**Actual:**
**469 ft.**

EDR Historical Auto Stations:

| | |
|---|---|
| Name: | GLENDALE TRANSMISSION EXCHANGE |
| Year: | 1960 |
| Type: | AUTOMOBILE REPAIRING |
| Name: | GLENDALE TRANSMISSION EXCHANGE |
| Year: | 1960 |
| Type: | AUTOMOBILE REPAIRING |
| Name: | GLENDALE TRANSMISSION EXCHANGE |
| Year: | 1967 |
| Type: | AUTOMOBILE REPAIRING |
| Name: | GLENDALE TRANSMISSION EXCHANGE |
| Year: | 1972 |
| Type: | AUTOMOBILE REPAIRING |
| Name: | GLENDALE TRANSMISSION EXCHANGE |
| Year: | 1972 |
| Type: | AUTOMOBILE REPAIRING |
| Name: | TRI STAR MOTORS |
| Year: | 2001 |
| Address: | 5832 SAN FERNANDO RD |
| Name: | TRI STAR MOTORS |
| Year: | 2003 |
| Address: | 5832 SAN FERNANDO RD |
| Name: | JACKS TRISTAR MOTORS INC |
| Year: | 2005 |
| Address: | 5832 SAN FERNANDO RD |
| Name: | JACKS TRISTAR MOTORS INC |
| Year: | 2006 |
| Address: | 5832 SAN FERNANDO RD |
| Name: | JACKS TRISTAR MOTORS INC |
| Year: | 2007 |
| Address: | 5832 SAN FERNANDO RD |

**GLENDALE TRANSMISSION EXCHANGE (Continued)** **1009013587**

Name: JACK TRI STAR MOTORS
Year: 2008
Address: 5832 SAN FERNANDO RD

Name: TRI STAR MOTORS
Year: 2009
Address: 5832 SAN FERNANDO RD

Name: TRISTAR MOTORS
Year: 2010
Address: 5832 SAN FERNANDO RD

Name: TRI STAR MOTORS INC
Year: 2011
Address: 5832 SAN FERNANDO RD

Name: TRI STAR MOTORS INC
Year: 2012
Address: 5832 SAN FERNANDO RD

---

**E45**
**North**
**< 1/8**
**0.087 mi.**
**462 ft.**

**TRI-STAR MOTORS** **WIP** **S106767417**
**5832 SAN FERNANDO RD** **N/A**
**GLENDALE, CA 91202**

**Site 5 of 5 in cluster E**

**Relative:**
**Higher**

**Actual:**
**469 ft.**

WIP:
Region: 4
File Number: 109.0054
**File Status:** **Historical**
Staff: AVELOZ
Facility Suite: Not reported

---

**G46**
**NW**
**< 1/8**
**0.092 mi.**
**487 ft.**

**GLENDALE ENV MGNT CTR CITY OF** **RCRA-SQG** **1000310218**
**780 FLOWER ST** **CDL** **CAD981369804**
**GLENDALE, CA 91201** **FINDS**
**HAZNET**
**Site 1 of 3 in cluster G** **HWT**
**ECHO**

**Relative:**
**Lower**

**Actual:**
**462 ft.**

RCRA-SQG:
Date form received by agency: 09/01/1996
Facility name: GLENDALE ENV MGNT CTR CITY OF
Facility address: 780 FLOWER ST
GLENDALE, CA 91201
EPA ID: CAD981369804
Contact: Not reported
Contact address: Not reported
Not reported
Contact country: US
Contact telephone: Not reported
Contact email: Not reported
EPA Region: 09
Classification: Small Small Quantity Generator
Description: Handler: generates more than 100 and less than 1000 kg of hazardous waste during any calendar month and accumulates less than 6000 kg of

**GLENDALE ENV MGNT CTR CITY OF (Continued)** **1000310218**

hazardous waste at any time; or generates 100 kg or less of hazardous waste during any calendar month, and accumulates more than 1000 kg of hazardous waste at any time

Owner/Operator Summary:

| | |
|---|---|
| Owner/operator name: | CITY OF GLENDALE |
| Owner/operator address: | 613 E BROADWAY<br>GLENDALE, CA 91206 |
| Owner/operator country: | Not reported |
| Owner/operator telephone: | (818) 548-4030 |
| Legal status: | Municipal |
| Owner/Operator Type: | Owner |
| Owner/Op start date: | Not reported |
| Owner/Op end date: | Not reported |

| | |
|---|---|
| Owner/operator name: | NOT REQUIRED |
| Owner/operator address: | NOT REQUIRED<br>NOT REQUIRED, ME 99999 |
| Owner/operator country: | Not reported |
| Owner/operator telephone: | (415) 555-1212 |
| Legal status: | Municipal |
| Owner/Operator Type: | Operator |
| Owner/Op start date: | Not reported |
| Owner/Op end date: | Not reported |

Handler Activities Summary:

| | |
|---|---|
| U.S. importer of hazardous waste: | No |
| Mixed waste (haz. and radioactive): | No |
| Recycler of hazardous waste: | No |
| Transporter of hazardous waste: | No |
| Treater, storer or disposer of HW: | No |
| Underground injection activity: | No |
| On-site burner exemption: | No |
| Furnace exemption: | No |
| Used oil fuel burner: | No |
| Used oil processor: | No |
| User oil refiner: | No |
| Used oil fuel marketer to burner: | No |
| Used oil Specification marketer: | No |
| Used oil transfer facility: | No |
| Used oil transporter: | No |

Historical Generators:

| | |
|---|---|
| Date form received by agency: | 02/11/1992 |
| Site name: | GLENDALE ENV MGNT CTR CITY OF |
| Classification: | Large Quantity Generator |
| Violation Status: | No violations found |

CDL:

| | |
|---|---|
| Facility ID: | 2003-10-097 |
| Date: | 10/23/2003 |
| Lab Type: | Abandoned Drug Lab Waste (A) - location away from an actual illegal drug lab where drug lab waste and/or equipment were abandoned. |

**GLENDALE ENV MGNT CTR CITY OF (Continued)** **1000310218**

FINDS:

Registry ID: 110011646308

Environmental Interest/Information System
NCDB (National Compliance Data Base) supports implementation of the Federal Insecticide, Fungicide, and Rodenticide Act (FIFRA) and the Toxic Substances Control Act (TSCA). The system tracks inspections in regions and states with cooperative agreements, enforcement actions, and settlements.

Registry ID: 110002683374

Environmental Interest/Information System
RCRAInfo is a national information system that supports the Resource Conservation and Recovery Act (RCRA) program through the tracking of events and activities related to facilities that generate, transport, and treat, store, or dispose of hazardous waste. RCRAInfo allows RCRA program staff to track the notification, permit, compliance, and corrective action activities required under RCRA.

HAZNET:

| | |
|---|---|
| envid: | 1000310218 |
| Year: | 1996 |
| GEPAID: | CAD981369804 |
| Contact: | CITY OF GLENDALE |
| Telephone: | 8185484844 |
| Mailing Name: | Not reported |
| Mailing Address: | 780 FLOWER ST |
| Mailing City,St,Zip: | GLENDALE, CA 912013057 |
| Gen County: | Not reported |
| TSD EPA ID: | CAT080011059 |
| TSD County: | Not reported |
| Waste Category: | Unspecified organic liquid mixture |
| Disposal Method: | Recycler |
| Tons: | 1.2510 |
| Cat Decode: | Unspecified organic liquid mixture |
| Method Decode: | Recycler |
| Facility County: | Los Angeles |

| | |
|---|---|
| envid: | 1000310218 |
| Year: | 1995 |
| GEPAID: | CAD981369804 |
| Contact: | CITY OF GLENDALE |
| Telephone: | 8185484844 |
| Mailing Name: | Not reported |
| Mailing Address: | 780 FLOWER ST |
| Mailing City,St,Zip: | GLENDALE, CA 912013057 |
| Gen County: | Not reported |
| TSD EPA ID: | AZD049318009 |
| TSD County: | Not reported |
| Waste Category: | Unspecified solvent mixture |
| Disposal Method: | Recycler |
| Tons: | .1876 |
| Cat Decode: | Unspecified solvent mixture |

**GLENDALE ENV MGNT CTR CITY OF (Continued)** **1000310218**

Method Decode: Recycler
Facility County: Los Angeles

envid: 1000310218
Year: 1995
GEPAID: CAD981369804
Contact: CITY OF GLENDALE
Telephone: 8185484844
Mailing Name: Not reported
Mailing Address: 780 FLOWER ST
Mailing City,St,Zip: GLENDALE, CA 912013057
Gen County: Not reported
TSD EPA ID: AZD049318009
TSD County: Not reported
Waste Category: Organic liquids (nonsolvents) with halogens
Disposal Method: Transfer Station
Tons: .0166
Cat Decode: Organic liquids (nonsolvents) with halogens
Method Decode: Transfer Station
Facility County: Los Angeles

envid: 1000310218
Year: 1995
GEPAID: CAD981369804
Contact: CITY OF GLENDALE
Telephone: 8185484844
Mailing Name: Not reported
Mailing Address: 780 FLOWER ST
Mailing City,St,Zip: GLENDALE, CA 912013057
Gen County: Not reported
TSD EPA ID: AZD049318009
TSD County: Not reported
Waste Category: Alkaline solution without metals pH >= 12.5
Disposal Method: Transfer Station
Tons: .0083
Cat Decode: Alkaline solution without metals pH >= 12.5
Method Decode: Transfer Station
Facility County: Los Angeles

envid: 1000310218
Year: 1995
GEPAID: CAD981369804
Contact: CITY OF GLENDALE
Telephone: 8185484844
Mailing Name: Not reported
Mailing Address: 780 FLOWER ST
Mailing City,St,Zip: GLENDALE, CA 912013057
Gen County: Not reported
TSD EPA ID: AZD049318009
TSD County: Not reported
Waste Category: Unspecified oil-containing waste
Disposal Method: Transfer Station
Tons: 3.5750
Cat Decode: Unspecified oil-containing waste
Method Decode: Transfer Station
Facility County: Los Angeles

**GLENDALE ENV MGNT CTR CITY OF (Continued)** **1000310218**

Click this hyperlink while viewing on your computer to access
21 additional CA_HAZNET: record(s) in the EDR Site Report.

HWT:
Reg Num: 2655
Expiration Date: 08/31/2016

ECHO:
Envid: 1000310218
Registry ID: 110011646308
DFR URL: http://echo.epa.gov/detailed_facility_report?fid=110011646308

Envid: 1000310218
Registry ID: 110002683374
DFR URL: http://echo.epa.gov/detailed_facility_report?fid=110002683374

---

**F47** **ANGELUS PET HOSPITAL** **WIP** **S106767394**
**NNW** **5846 SAN FERNANDO RD** **N/A**
**< 1/8** **GLENDALE, CA 91202**
**0.094 mi.**
**498 ft.** **Site 6 of 7 in cluster F**

**Relative:**
**Higher**

**Actual:**
**468 ft.**

WIP:
Region: 4
File Number: 109.0021
**File Status:** **Historical**
Staff: YRONG
Facility Suite: Not reported

---

**G48** **THE BEKINS CO.** **WIP** **S106767941**
**NW** **777 S FLOWER ST** **N/A**
**< 1/8** **GLENDALE, CA 91201**
**0.102 mi.**
**539 ft.** **Site 2 of 3 in cluster G**

**Relative:**
**Lower**

**Actual:**
**462 ft.**

WIP:
Region: 4
File Number: 109.1731
**File Status:** **Historical**
Staff: KLEE
Facility Suite: Not reported

---

**G49** **PRUDENTIAL INSURANCE CO** **WIP** **S106767686**
**NW** **900 GRAND CENTRAL AVE** **N/A**
**< 1/8** **GLENDALE, CA 91201**
**0.103 mi.**
**543 ft.** **Site 3 of 3 in cluster G**

**Relative:**
**Lower**

**Actual:**
**462 ft.**

WIP:
Region: 4
File Number: 109.0755
**File Status:** **Historical**
Staff: UNIDENTIFIED
Facility Suite: Not reported

**F50**
**NNW**
**< 1/8**
**0.108 mi.**
**572 ft.**

**KIEV RADIO 870 AM**
**5900 SAN FERNANDO RD**
**GLENDALE, CA 91202**

**WIP** **S106767395**
**N/A**

**Site 7 of 7 in cluster F**

**Relative:**
**Higher**

**Actual:**
**468 ft.**

WIP:

| | |
|---|---|
| Region: | 4 |
| File Number: | 109.0022 |
| **File Status:** | **Historical** |
| Staff: | RNEVAREZ |
| Facility Suite: | Not reported |

---

**H51**
**SSE**
**< 1/8**
**0.115 mi.**
**608 ft.**

**4552 DORAN ST**
**LOS ANGELES, CA 90039**

**EDR Hist Auto** **1015504628**
**N/A**

**Site 1 of 2 in cluster H**

**Relative:**
**Lower**

**Actual:**
**453 ft.**

EDR Historical Auto Stations:

| | |
|---|---|
| Name: | SELECT AUTO DISMANTLING |
| Year: | 2005 |
| Address: | 4552 DORAN ST |
| Name: | KWIK AUTO SERVICE |
| Year: | 2008 |
| Address: | 4552 DORAN ST |
| Name: | KWIK AUTO SERVICE |
| Year: | 2009 |
| Address: | 4552 DORAN ST |

---

**H52**
**SSE**
**< 1/8**
**0.115 mi.**
**609 ft.**

**4550 DORAN ST**
**LOS ANGELES, CA 90039**

**EDR Hist Auto** **1015504553**
**N/A**

**Site 2 of 2 in cluster H**

**Relative:**
**Lower**

**Actual:**
**453 ft.**

EDR Historical Auto Stations:

| | |
|---|---|
| Name: | GLENDALE AUTO DISMANTLING INC |
| Year: | 2003 |
| Address: | 4550 DORAN ST |
| Name: | SXA AUTO BODY |
| Year: | 2005 |
| Address: | 4550 DORAN ST |

**I53 NNW 1/8-1/4 0.141 mi. 747 ft.** — **PACIFIC PLASTICS DESIGN**, **911 AIRWAY**, **GLENDALE, CA 91201** — **WIP** — **S103994993** / **N/A**

**Site 1 of 12 in cluster I**

**Relative: Lower**
**Actual: 466 ft.**

WIP:

| | |
|---|---|
| Region: | 4 |
| File Number: | 109.0727 |
| **File Status:** | **Historical** |
| Staff: | MH |
| Facility Suite: | Not reported |

---

**I54 NNW 1/8-1/4 0.146 mi. 773 ft.** — **SPERRY ELECTRIC INC**, **915 AIR WAY**, **GLENDALE, CA 91201** — **HIST UST** — **U001566860** / **N/A**

**Site 2 of 12 in cluster I**

**Relative: Lower**
**Actual: 466 ft.**

HIST UST:

| | |
|---|---|
| File Number: | 000287E5 |
| URL: | http://geotracker.waterboards.ca.gov/ustpdfs/pdf/000287E5.pdf |
| Region: | STATE |
| Facility ID: | 00000003020 |
| Facility Type: | Other |
| Other Type: | CONTRACTOR |
| Contact Name: | SYLVIA M. BINGAMAN |
| Telephone: | 2132450359 |
| Owner Name: | SPERRY ELECTRIC, INC. |
| Owner Address: | 915 AIRWAY |
| Owner City,St,Zip: | GLENDALE, CA 91201 |
| Total Tanks: | 0001 |
| | |
| Tank Num: | 001 |
| Container Num: | 100 |
| Year Installed: | Not reported |
| Tank Capacity: | 00001000 |
| Tank Used for: | PRODUCT |
| Type of Fuel: | REGULAR |
| Container Construction Thickness: | Not reported |
| Leak Detection: | None |

Click here for Geo Tracker PDF:

---

**I55 NNW 1/8-1/4 0.146 mi. 773 ft.** — **MONTEREY TOW SERVICE**, **915 AIRWAY**, **GLENDALE, CA** — **WIP** — **S106767664** / **N/A**

**Site 3 of 12 in cluster I**

**Relative: Lower**
**Actual: 466 ft.**

WIP:

| | |
|---|---|
| Region: | 4 |
| File Number: | 109.0728 |
| **File Status:** | **Historical** |
| Staff: | AZASZKOD |
| Facility Suite: | Not reported |

**I56 NNW 1/8-1/4 0.146 mi. 773 ft.** | **MONTEREY TOW**
**915 AIR WY**
**GLENDALE, CA 91205** | **LUST** | **S104405465**
**N/A**

**Site 4 of 12 in cluster I**

**Relative: Lower**

**Actual: 466 ft.**

LUST REG 4:

| | | |
|---|---|---|
| Region: | 4 | |
| Regional Board: | 04 | |
| County: | Los Angeles | |
| Facility Id: | 109.0728 | |
| Status: | Case Closed | |
| Substance: | Gasoline | |
| Substance Quantity: | Not reported | |
| Local Case No: | Not reported | |
| Case Type: | Soil | |
| Abatement Method Used at the Site: | | Not reported |
| Global ID: | T0603700173 | |
| W Global ID: | Not reported | |
| Staff: | WIP | |
| Local Agency: | 19070 | |
| Cross Street: | SAN FERNANDO | |
| Enforcement Type: | Not reported | |
| Date Leak Discovered: | 6/6/1991 | |
| Date Leak First Reported: | | 7/16/1991 |
| Date Leak Record Entered: | 7/29/1991 | |
| Date Confirmation Began: | Not reported | |
| Date Leak Stopped: | 6/6/1991 | |
| Date Case Last Changed on Database: | | 3/25/1993 |
| Date the Case was Closed: | | 7/22/1998 |
| How Leak Discovered: | Tank Closure | |
| How Leak Stopped: | Not reported | |
| Cause of Leak: | Corrosion | |
| Leak Source: | Tank | |
| Operator: | J & E SERVICE | |
| Water System: | Not reported | |
| Well Name: | Not reported | |
| Approx. Dist To Production Well (ft): | | 1007.776211641051251474424122 6 |
| Source of Cleanup Funding: | | Tank |
| Preliminary Site Assessment Workplan Submitted: | | 7/16/1991 |
| Preliminary Site Assessment Began: | | Not reported |
| Pollution Characterization Began: | | Not reported |
| Remediation Plan Submitted: | | Not reported |
| Remedial Action Underway: | | Not reported |
| Post Remedial Action Monitoring Began: | | Not reported |
| Enforcement Action Date: | | Not reported |
| Historical Max MTBE Date: | | Not reported |
| Hist Max MTBE Conc in Groundwater: | | Not reported |
| Hist Max MTBE Conc in Soil: | | Not reported |
| Significant Interim Remedial Action Taken: | | Not reported |
| GW Qualifier: | Not reported | |
| Soil Qualifier: | Not reported | |
| Organization: | Not reported | |
| Owner Contact: | Not reported | |
| Responsible Party: | J & E SERVICE | |
| RP Address: | 601 GLENDALE AVE., GLENDALE, 91205 | |
| Program: | LUST | |
| Lat/Long: | 34.1587069 / -1 | |
| Local Agency Staff: | UNK | |

**MONTEREY TOW (Continued)** **S104405465**

Beneficial Use: Not reported
Priority: LOP/HIGH - ADMINISTRATIVE (CLOSURE/SB2004/ENFORCEMENT)
Cleanup Fund Id: Not reported
Suspended: Not reported
Assigned Name: Not reported
Summary: AWAITING LOCAL AGENCY APPROVAL TO BEGIN SITE ASSESSMENT AWAITING FOR CLOSURE REPORT. WIP CASE FILE HAS BEEN TAKEN FROM WIP BY? CASE CLOSED BY AZ

---

**I57 NNW 1/8-1/4 0.146 mi. 773 ft.** | **MONTEREY TOW 915 AIR WY GLENDALE, CA 91205** | **LUST HIST CORTESE** | **S102433953 N/A**

**Site 5 of 12 in cluster I**

**Relative: Lower**

**Actual: 466 ft.**

LUST:
Region: STATE
Global Id: T0603700173
Latitude: 34.15903
Longitude: -118.28048
Case Type: LUST Cleanup Site
Status: Completed - Case Closed
Status Date: 07/22/1998
Lead Agency: LOS ANGELES RWQCB (REGION 4)
Case Worker: WIP
Local Agency: GLENDALE, CITY OF
RB Case Number: 109.0728
LOC Case Number: Not reported
File Location: Not reported
Potential Media Affect: Soil
Potential Contaminants of Concern: Gasoline
Site History: Not reported

Click here to access the California GeoTracker records for this facility:

Contact:
Global Id: T0603700173
Contact Type: Local Agency Caseworker
Contact Name: UNK
Organization Name: GLENDALE, CITY OF
Address: Not reported
City: r4 UNKNOWN
Email: Not reported
Phone Number: Not reported

Global Id: T0603700173
Contact Type: Regional Board Caseworker
Contact Name: WELL INVESTIGATION PROGRAM
Organization Name: LOS ANGELES RWQCB (REGION 4)
Address: 320 W. 4TH ST., SUITE 200
City: LOS ANGELES
Email: Not reported
Phone Number: Not reported

Status History:
Global Id: T0603700173
Status: Completed - Case Closed
Status Date: 07/22/1998

**MONTEREY TOW (Continued)** **S102433953**

Global Id: T0603700173
Status: Open - Case Begin Date
Status Date: 06/06/1991

Global Id: T0603700173
Status: Open - Site Assessment
Status Date: 07/16/1991

Regulatory Activities:
Global Id: T0603700173
Action Type: Other
Date: 06/06/1991
Action: Leak Discovery

Global Id: T0603700173
Action Type: Other
Date: 07/16/1991
Action: Leak Reported

Global Id: T0603700173
Action Type: Other
Date: 06/06/1991
Action: Leak Stopped

HIST CORTESE:
Region: CORTESE
Facility County Code: 19
Reg By: LTNKA
Reg Id: 109.0728

---

**I58** **GLENAIR, INC.** **SLIC** **S117624731**
**NW** **920 AIR WAY** **N/A**
**1/8-1/4** **GLENDALE, CA 91201**
**0.147 mi.**
**774 ft.** **Site 6 of 12 in cluster I**

**Relative:**
**Lower**

**Actual:**
**465 ft.**

SLIC:
Region: STATE
**Facility Status:** **Completed - Case Closed**
Status Date: 11/04/2015
Global Id: T10000006454
Lead Agency: LOS ANGELES RWQCB (REGION 4)
Lead Agency Case Number: Not reported
Latitude: 34.1585795
Longitude: -118.2809897
Case Type: Cleanup Program Site
Case Worker: GP
Local Agency: Not reported
RB Case Number: 109.0692
File Location: Not reported
Potential Media Affected: Not reported
Potential Contaminants of Concern: Chromium, Chromium VI
Site History: The Glenair, Inc. facilities were issued a California Water Code Section 13267 Order dated September 19, 2012 to complete a chemical use and storage questionnaire (CUQ) for each of their property addresses. A site inspection was conducted by Regional Board staff on

**GLENAIR, INC. (Continued)** **S117624731**

August 5, 2014 at the facility located at 801 Western Avenue in Glendale, California. Upon reviewing the information attained through the CUQs and site inspection, the Regional Board issued a No Further Requirements for Soils Only letter to Glenair, Inc. on September 17, 2014.

Click here to access the California GeoTracker records for this facility:

---

**I59**
**NW**
**1/8-1/4**
**0.147 mi.**
**774 ft.**

**GLENAIR INC.**
**920 AIRWAY**
**GLENDALE, CA 91201**

**Site 7 of 12 in cluster I**

**WIP** **S106767639**
**N/A**

**Relative:**
**Lower**

**Actual:**
**465 ft.**

WIP:

| | |
|---|---|
| Region: | 4 |
| File Number: | 109.0692 |
| **File Status:** | **Historical** |
| Staff: | MH |
| Facility Suite: | Not reported |

---

**J60**
**NNW**
**1/8-1/4**
**0.150 mi.**
**790 ft.**

**CENTRAL SCREEN CO.**
**5914 SAN FERNANDO RD**
**GLENDALE, CA 91202**

**Site 1 of 5 in cluster J**

**WIP** **S106767396**
**N/A**

**Relative:**
**Higher**

**Actual:**
**468 ft.**

WIP:

| | |
|---|---|
| Region: | 4 |
| File Number: | 109.0023 |
| **File Status:** | **Historical** |
| Staff: | KLEE |
| Facility Suite: | Not reported |

---

**K61**
**SE**
**1/8-1/4**
**0.154 mi.**
**811 ft.**

**MOULDER BROS**
**955 W DORAN ST**
**GLENDALE, CA 91201**

**Site 1 of 6 in cluster K**

**HIST UST** **U001566853**
**N/A**

**Relative:**
**Higher**

**Actual:**
**471 ft.**

HIST UST:

| | |
|---|---|
| File Number: | 000280CD |
| URL: | http://geotracker.waterboards.ca.gov/ustpdfs/pdf/000280CD.pdf |
| Region: | STATE |
| Facility ID: | 00000020976 |
| Facility Type: | Other |
| Other Type: | Not reported |
| Contact Name: | DON SUMNER |
| Telephone: | 8182423546 |
| Owner Name: | MOULDER BROS |
| Owner Address: | 511 WESTERN AVE. |
| Owner City,St,Zip: | GLENDALE, CA 91201 |
| Total Tanks: | 0001 |
| | |
| Tank Num: | 001 |

**MOULDER BROS (Continued)** **U001566853**

Container Num: 1
Year Installed: Not reported
Tank Capacity: 00011000
Tank Used for: PRODUCT
Type of Fuel: UNLEADED
Container Construction Thickness: Not reported
Leak Detection: None

Click here for Geo Tracker PDF:

---

**I62**
**NW**
**1/8-1/4**
**0.156 mi.**
**826 ft.**

**GLENAIR INC.** **WIP** **S106767638**
**930 AIRWAY** **N/A**
**GLENDALE, CA 91201**

**Site 8 of 12 in cluster I**

**Relative:**
**Lower**

**Actual:**
**466 ft.**

WIP:
Region: 4
File Number: 109.0691
**File Status: Historical**
Staff: MH
Facility Suite: Not reported

---

**K63**
**SE**
**1/8-1/4**
**0.156 mi.**
**826 ft.**

**CALTRANS DORAN ST** **RCRA-SQG** **1004677446**
**943 DORAN ST** **FINDS** **CAR000097378**
**GLENDALE, CA 91204** **ECHO**

**Site 2 of 6 in cluster K**

**Relative:**
**Higher**

**Actual:**
**471 ft.**

RCRA-SQG:
Date form received by agency: 05/22/2001
Facility name: CALTRANS DORAN ST
Facility address: 943 DORAN ST
GLENDALE, CA 91204
EPA ID: CAR000097378
Mailing address: 120 S SPRING ST
LOS ANGELES, CA 90012
Contact: RICHARD CRAWFORD
Contact address: 2187 RIVERSIDE DR
LOS ANGELES, CA 90039
Contact country: US
Contact telephone: (213) 620-3328
Contact email: Not reported
EPA Region: 09
Classification: Small Small Quantity Generator
Description: Handler: generates more than 100 and less than 1000 kg of hazardous waste during any calendar month and accumulates less than 6000 kg of hazardous waste at any time; or generates 100 kg or less of hazardous waste during any calendar month, and accumulates more than 1000 kg of hazardous waste at any time

Owner/Operator Summary:
Owner/operator name: STATE OF CALIFORNIA
Owner/operator address: 120 S SPRING ST
LOS ANGELES, CA 90012
Owner/operator country: Not reported

**CALTRANS DORAN ST (Continued)** **1004677446**

Owner/operator telephone: (213) 897-3955
Legal status: State
Owner/Operator Type: Owner
Owner/Op start date: Not reported
Owner/Op end date: Not reported

Handler Activities Summary:
U.S. importer of hazardous waste: No
Mixed waste (haz. and radioactive): No
Recycler of hazardous waste: No
Transporter of hazardous waste: Yes
Treater, storer or disposer of HW: No
Underground injection activity: No
On-site burner exemption: No
Furnace exemption: No
Used oil fuel burner: No
Used oil processor: No
User oil refiner: No
Used oil fuel marketer to burner: No
Used oil Specification marketer: No
Used oil transfer facility: No
Used oil transporter: No

. Waste code: D000
. Waste name: Not Defined

. Waste code: D001
. Waste name: IGNITABLE WASTE

. Waste code: D008
. Waste name: LEAD

. Waste code: F001
. Waste name: THE FOLLOWING SPENT HALOGENATED SOLVENTS USED IN DEGREASING: TETRACHLOROETHYLENE, TRICHLORETHYLENE, METHYLENE CHLORIDE, 1,1,1-TRICHLOROETHANE, CARBON TETRACHLORIDE AND CHLORINATED FLUOROCARBONS; ALL SPENT SOLVENT MIXTURES/BLENDS USED IN DEGREASING CONTAINING, BEFORE USE, A TOTAL OF TEN PERCENT OR MORE (BY VOLUME) OF ONE OR MORE OF THE ABOVE HALOGENATED SOLVENTS OR THOSE SOLVENTS LISTED IN F002, F004, AND F005; AND STILL BOTTOMS FROM THE RECOVERY OF THESE SPENT SOLVENTS AND SPENT SOLVENT MIXTURES.

. Waste code: F002
. Waste name: THE FOLLOWING SPENT HALOGENATED SOLVENTS: TETRACHLOROETHYLENE, METHYLENE CHLORIDE, TRICHLOROETHYLENE, 1,1,1-TRICHLOROETHANE, CHLOROBENZENE, 1,1,2-TRICHLORO-1,2,2-TRIFLUOROETHANE, ORTHO-DICHLOROBENZENE, TRICHLOROFLUOROMETHANE, AND 1,1,2, TRICHLOROETHANE; ALL SPENT SOLVENT MIXTURES/BLENDS CONTAINING, BEFORE USE, A TOTAL OF TEN PERCENT OR MORE (BY VOLUME) OF ONE OR MORE OF THE ABOVE HALOGENATED SOLVENTS OR THOSE SOLVENTS LISTED IN F001, F004, AND F005; AND STILL BOTTOMS FROM THE RECOVERY OF THESE SPENT SOLVENTS AND SPENT SOLVENT MIXTURES.

Violation Status: No violations found

FINDS:

**CALTRANS DORAN ST (Continued)** **1004677446**

Registry ID: 110012203613

Environmental Interest/Information System

California Hazardous Waste Tracking System - Datamart (HWTS-DATAMART) provides California with information on hazardous waste shipments for generators, transporters, and treatment, storage, and disposal facilities.

RCRAInfo is a national information system that supports the Resource Conservation and Recovery Act (RCRA) program through the tracking of events and activities related to facilities that generate, transport, and treat, store, or dispose of hazardous waste. RCRAInfo allows RCRA program staff to track the notification, permit, compliance, and corrective action activities required under RCRA.

ECHO:

| | |
|---|---|
| Envid: | 1004677446 |
| Registry ID: | 110012203613 |
| DFR URL: | http://echo.epa.gov/detailed_facility_report?fid=110012203613 |

---

**K64** **CITY OF GLENDALE WASTE H20 PMP** **SWEEPS UST** **U001566838**
**SE** **976 W DORAN ST** **HIST UST** **N/A**
**1/8-1/4** **GLENDALE, CA 91201**
**0.156 mi.**
**826 ft.** **Site 3 of 6 in cluster K**

**Relative:**
**Higher**

**Actual:**
**470 ft.**

SWEEPS UST:

| | |
|---|---|
| Status: | Active |
| Comp Number: | 10434 |
| Number: | 4 |
| Board Of Equalization: | Not reported |
| Referral Date: | 07-29-91 |
| Action Date: | 07-29-91 |
| Created Date: | 06-30-89 |
| Owner Tank Id: | 001 |
| SWRCB Tank Id: | 19-070-010434-000001 |
| Tank Status: | A |
| Capacity: | 550 |
| Active Date: | 07-29-91 |
| Tank Use: | M.V. FUEL |
| STG: | P |
| Content: | DIESEL |
| Number Of Tanks: | 1 |

HIST UST:

| | |
|---|---|
| File Number: | 00027014 |
| URL: | http://geotracker.waterboards.ca.gov/ustpdfs/pdf/00027014.pdf |
| Region: | STATE |
| Facility ID: | 00000034266 |
| Facility Type: | Other |
| Other Type: | MUNICIPALITY |
| Contact Name: | JOHN VOS, |
| Telephone: | 8189563950 |
| Owner Name: | CITY OF GLENDALE, P.W. STREET |
| Owner Address: | 541 W. CHEVY CHASE |
| Owner City,St,Zip: | GLENDALE, CA 91204 |

**CITY OF GLENDALE WASTE H20 PMP (Continued)** **U001566838**

| | |
|---|---|
| Total Tanks: | 0001 |
| Tank Num: | 001 |
| Container Num: | 1 |
| Year Installed: | 1983 |
| Tank Capacity: | 00000400 |
| Tank Used for: | PRODUCT |
| Type of Fuel: | DIESEL |
| Container Construction Thickness: | Not reported |
| Leak Detection: | Stock Inventor |

Click here for Geo Tracker PDF:

---

**L65** **SOUTH COAST FIBERS INC** **SWRCY** **S107869739**
**SSE** **5487 W SAN FERNANDO RD** **N/A**
**1/8-1/4** **LOS ANGELES, CA 90039**
**0.161 mi.**
**850 ft.** **Site 1 of 8 in cluster L**

**Relative:**
**Lower**

**Actual:**
**451 ft.**

SWRCY:

| | |
|---|---|
| Reg Id: | 18758 |
| Cert Id: | RC13141 |
| Mailing Address: | 4560 Doran St |
| Mailing City: | Los Angeles |
| Mailing State: | CA |
| Mailing Zip Code: | 90039 |
| Website: | Not reported |
| Email: | Not reported |
| Phone Number: | (818) 552-4068 |
| Grand Father: | N |
| Rural: | N |
| Operation Begin Date: | 11/18/2006 |
| Aluminium: | Y |
| Glass: | Y |
| Plastic: | Y |
| Bimetal: | Y |
| Agency: | N/A |
| Monday Hours Of Operation: | 8:00 am - 5:00 pm |
| Tuesday Hours Of Operation: | 8:00 am - 5:00 pm |
| Wednesday Hours Of Operation: | 8:00 am - 5:00 pm |
| Thursday Hours Of Operation: | 8:00 am - 5:00 pm |
| Friday Hours Of Operation: | 8:00 am - 5:00 pm |
| Saturday Hours Of Operation: | 8:00 am - 3:30 pm |
| Sunday Hours Of Operation: | CLOSED |
| Organization ID: | 18758 |
| Organization Name: | South Coast Fibers Inc |

**L66 SSE 1/8-1/4 0.161 mi. 850 ft.** | **SOUTH COAST RECYCLING, INC.**
**4560 DORAN ST**
**LOS ANGELES, CA 90039**

**Site 2 of 8 in cluster L**

**WDS** **S104733460**
**WIP** **N/A**

**Relative: Lower**

**Actual: 451 ft.**

WDS:

| | |
|---|---|
| Facility ID: | 4 19I004889 |
| Facility Type: | Other - Does not fall into the category of Municipal/Domestic, Industrial, Agricultural or Solid Waste (Class I, II or III) |
| Facility Status: | Active - Any facility with a continuous or seasonal discharge that is under Waste Discharge Requirements. |
| NPDES Number: | CAS000001 The 1st 2 characters designate the state. The remaining 7 are assigned by the Regional Board |
| Subregion: | 4 |
| Facility Telephone: | 2132450125 |
| Facility Contact: | John Gasparian |
| Agency Name: | SOUTH COAST RECYCLING INC. |
| Agency Address: | 4560 Doran Street |
| Agency City,St,Zip: | Los Angeles 90039 |
| Agency Contact: | John R. Gasparian |
| Agency Telephone: | 3232455133 |
| Agency Type: | Private |
| SIC Code: | 5093 |
| SIC Code 2: | Not reported |
| Primary Waste Type: | Not reported |
| Primary Waste: | Not reported |
| Waste Type2: | Not reported |
| Waste2: | Not reported |
| Primary Waste Type: | Not reported |
| Secondary Waste: | Not reported |
| Secondary Waste Type: | Not reported |
| Design Flow: | 0 |
| Baseline Flow: | 0 |
| Reclamation: | No reclamation requirements associated with this facility. |
| POTW: | The facility is not a POTW. |
| Treat To Water: | Minor Threat to Water Quality. A violation of a regional board order should cause a relatively minor impairment of beneficial uses compared to a major or minor threat. Not: All nurds without a TTWQ will be considered a minor threat to water quality unless coded at a higher Level. A Zero (0) may be used to code those NURDS that are found to represent no threat to water quality. |
| Complexity: | Category C - Facilities having no waste treatment systems, such as cooling water dischargers or thosewho must comply through best management practices, facilities with passive waste treatment and disposal systems, such as septic systems with subsurface disposal, or dischargers having waste storage systems with land disposal such as dairy waste ponds. |

WIP:

| | |
|---|---|
| Region: | 4 |
| File Number: | 113.0418 |
| **File Status:** | **Historical** |
| Staff: | RNEVAREZ |
| Facility Suite: | Not reported |

**L67 SSE 1/8-1/4 0.161 mi. 850 ft.** | **AAA PAPER STOCK COMPANY**
**5487 SAN FERNANDO RD**
**LOS ANGELES, CA 90039** | **SWEEPS UST**
**CA FID UST** | **S101587690**
**N/A**

**Site 3 of 8 in cluster L**

**Relative: Lower**

**Actual: 451 ft.**

SWEEPS UST:

| | |
|---|---|
| Status: | Active |
| Comp Number: | 4817 |
| Number: | 1 |
| Board Of Equalization: | Not reported |
| Referral Date: | 02-25-93 |
| Action Date: | 03-08-94 |
| Created Date: | 02-29-88 |
| Owner Tank Id: | Not reported |
| SWRCB Tank Id: | Not reported |
| Tank Status: | Not reported |
| Capacity: | Not reported |
| Active Date: | Not reported |
| Tank Use: | Not reported |
| STG: | Not reported |
| Content: | Not reported |
| Number Of Tanks: | Not reported |

CA FID UST:

| | |
|---|---|
| Facility ID: | 19055896 |
| Regulated By: | UTNKA |
| Regulated ID: | Not reported |
| Cortese Code: | Not reported |
| SIC Code: | Not reported |
| Facility Phone: | 2130000000 |
| Mail To: | Not reported |
| Mailing Address: | 5487 SAN FERNANDO RD |
| Mailing Address 2: | Not reported |
| Mailing City,St,Zip: | LOS ANGELES 900390000 |
| Contact: | Not reported |
| Contact Phone: | Not reported |
| DUNs Number: | Not reported |
| NPDES Number: | Not reported |
| EPA ID: | Not reported |
| Comments: | Not reported |
| Status: | Active |

---

**L68 SSE 1/8-1/4 0.161 mi. 850 ft.** | **AAA PAPER STOCK COMPANY**
**4560 DORAN ST**
**LOS ANGELES, CA 90039** | **SWEEPS UST**
**CA FID UST**
**EMI** | **S101585573**
**N/A**

**Site 4 of 8 in cluster L**

**Relative: Lower**

**Actual: 451 ft.**

SWEEPS UST:

| | |
|---|---|
| Status: | Not reported |
| Comp Number: | 4811 |
| Number: | Not reported |
| Board Of Equalization: | Not reported |
| Referral Date: | Not reported |
| Action Date: | Not reported |
| Created Date: | Not reported |
| Owner Tank Id: | Not reported |
| SWRCB Tank Id: | Not reported |

**AAA PAPER STOCK COMPANY (Continued)** **S101585573**

| | |
|---|---|
| Tank Status: | Not reported |
| Capacity: | Not reported |
| Active Date: | Not reported |
| Tank Use: | Not reported |
| STG: | Not reported |
| Content: | Not reported |
| Number Of Tanks: | Not reported |

CA FID UST:

| | |
|---|---|
| Facility ID: | 19025549 |
| Regulated By: | UTNKI |
| Regulated ID: | Not reported |
| Cortese Code: | Not reported |
| SIC Code: | Not reported |
| Facility Phone: | 2132455133 |
| Mail To: | Not reported |
| Mailing Address: | 4560 DORAN ST |
| Mailing Address 2: | Not reported |
| Mailing City,St,Zip: | LOS ANGELES 900390000 |
| Contact: | Not reported |
| Contact Phone: | Not reported |
| DUNs Number: | Not reported |
| NPDES Number: | Not reported |
| EPA ID: | Not reported |
| Comments: | Not reported |
| Status: | Inactive |

EMI:

| | |
|---|---|
| Year: | 1987 |
| County Code: | 19 |
| Air Basin: | SC |
| Facility ID: | 56300 |
| Air District Name: | SC |
| SIC Code: | 2621 |
| Air District Name: | SOUTH COAST AQMD |
| Community Health Air Pollution Info System: | Not reported |
| Consolidated Emission Reporting Rule: | Not reported |
| Total Organic Hydrocarbon Gases Tons/Yr: | 0 |
| Reactive Organic Gases Tons/Yr: | 0 |
| Carbon Monoxide Emissions Tons/Yr: | 0 |
| NOX - Oxides of Nitrogen Tons/Yr: | 0 |
| SOX - Oxides of Sulphur Tons/Yr: | 0 |
| Particulate Matter Tons/Yr: | 1 |
| Part. Matter 10 Micrometers and Smllr Tons/Yr: | 0 |

---

**L69** **AMERICAN RECLAMATION CHIPPING & GRINDING** **SWF/LF** **S110042619**
**SSE** **4560 DORAN ST** **N/A**
**1/8-1/4** **LOS ANGELES, CA 90039**
**0.161 mi.**
**850 ft.** **Site 5 of 8 in cluster L**

**Relative:**
**Lower**

**Actual:**
**451 ft.**

SWF/LF (SWIS):

| | |
|---|---|
| Region: | STATE |
| Facility ID: | 19-AR-1241 |
| Lat/Long: | 34.152420 / -118.27720 |
| Owner Name: | Glendale Metals and Recycling, Inc. |
| Owner Telephone: | 8185524074 |

**AMERICAN RECLAMATION CHIPPING & GRINDING (Continued)** **S110042619**

| | |
|---|---|
| Owner Address: | John R. Gasparian |
| Owner Address2: | 4560 Doran St. |
| Owner City,St,Zip: | Los Angeles, CA 90039 |
| Operational Status: | Active |
| Operator: | American Reclamation, Inc. |
| Operator Phone: | 8182450125 |
| Operator Address: | John R. Gasparian |
| Operator Address2: | 4560 Doran St. |
| Operator City,St,Zip: | Los Angeles, CA 90039 |
| Permit Date: | 08/05/2010 |
| Permit Status: | Permitted |
| Permitted Acreage: | $0.30 |
| Activity: | Medium Vol CDI Debris Proc. Fac. |
| Regulation Status: | Permitted |
| Landuse Name: | Industrial,Commercial |
| GIS Source: | Map |
| Category: | Transfer/Processing |
| Unit Number: | 01 |
| Inspection Frequency: | Monthly |
| Accepted Waste: | Construction/demolition,Inert |
| Closure Date: | Not reported |
| Closure Type: | Not reported |
| Disposal Acreage: | Not reported |
| SWIS Num: | 19-AR-1241 |
| Waste Discharge Requirement Num: | Not reported |
| Program Type: | Not reported |
| Permitted Throughput with Units: | 174 |
| Actual Throughput with Units: | Tons/day |
| Permitted Capacity with Units: | 63875 |
| Remaining Capacity: | Not reported |
| Remaining Capacity with Units: | Tons/year |
| Lat/Long: | 34.152420 / -118.27720 |

| | |
|---|---|
| Region: | STATE |
| Facility ID: | 19-AR-1242 |
| Lat/Long: | 34.152910 / -118.27660 |
| Owner Name: | Glendale Metals and Recycling, Inc. |
| Owner Telephone: | 8185524074 |
| Owner Address: | John R. Gasparian |
| Owner Address2: | 4560 Doran St. |
| Owner City,St,Zip: | Los Angeles, CA 90039 |
| Operational Status: | Active |
| Operator: | American Reclamation, Inc. |
| Operator Phone: | 8182450125 |
| Operator Address: | John R. Gasparian |
| Operator Address2: | 4560 Doran St. |
| Operator City,St,Zip: | Los Angeles, CA 90039 |
| Permit Date: | 08/05/2010 |
| Permit Status: | Permitted |
| Permitted Acreage: | $0.60 |
| Activity: | Medium Vol CD Wood Debris ChipGrind Fac. |
| Regulation Status: | Permitted |
| Landuse Name: | Industrial,Commercial |
| GIS Source: | Map |
| Category: | Transfer/Processing |
| Unit Number: | 01 |
| Inspection Frequency: | Monthly |

**AMERICAN RECLAMATION CHIPPING & GRINDING (Continued)** **S110042619**

| | |
|---|---|
| Accepted Waste: | Green Materials,Wood waste |
| Closure Date: | Not reported |
| Closure Type: | Not reported |
| Disposal Acreage: | Not reported |
| SWIS Num: | 19-AR-1242 |
| Waste Discharge Requirement Num: | Not reported |
| Program Type: | Not reported |
| Permitted Throughput with Units: | 499 |
| Actual Throughput with Units: | Tons/day |
| Permitted Capacity with Units: | 182500 |
| Remaining Capacity: | Not reported |
| Remaining Capacity with Units: | Tons/year |
| Lat/Long: | 34.152910 / -118.27660 |

LOS ANGELES CO. LF:

| | |
|---|---|
| Site ID: | 2644 |
| Alt. Address: | Not reported |
| Site Contact: | Not reported |
| Site Contact Phone: | (888) 999-9330 |
| Site Email: | Not reported |
| Site Website: | http://www.americanreclamationinc.com/ |
| Site Type: | Transfer and Processing Facility |
| Site SWIS Number: | 19-AR-1241 |
| Beginning Operation Date: | Not reported |
| Ending Operation Date: | Not reported |
| Local Enforcement Agency: | Los Angeles Dept of Building & Safety |
| Maximun Depth Fill(Ft): | Not reported |
| Permitted Capacity: | Not reported |
| Present Use: | Not reported |
| Remaining Capacity(Million): | Not reported |
| Status: | Active |
| Waste Accepted: | Construction & Demolition;Metals; |
| Hours of Operation: | Mon to Fri, 7 AM - 5 PM; Sat, 7 AM - 3 PM |
| Disposal Area (Acre): | Not reported |

Detail As Of 01/2014:

| | |
|---|---|
| Operator Name: | American Reclamation Inc. |
| Operator Address: | 4560 Doran ST. |
| Operator City/State/Zip: | Los Angeles, CA 90039-1006 |
| Operator Contact: | John Gasparian |
| Operator Telephone: | (323) 245-5133 |
| Operator Email: | joe@socoastrec.com |
| Owner Name: | Unknown |
| Owner Address: | Not reported |
| Owner City/State/Zip: | Not reported |
| Owner Contact: | Not reported |
| Owner Telephone: | Not reported |
| Owner Email: | Not reported |

| | |
|---|---|
| Site ID: | 2771 |
| Alt. Address: | N/A |
| Site Contact: | Not reported |
| Site Contact Phone: | (323) 245-0125 |
| Site Email: | craig@socoastrec.com |
| Site Website: | http://americanreclamationinc.com/ |
| Site Type: | Chipping and Grinding |
| Site SWIS Number: | 19-AR-1242 |

**AMERICAN RECLAMATION CHIPPING & GRINDING (Continued)** **S110042619**

| | |
|---|---|
| Beginning Operation Date: | N/A |
| Ending Operation Date: | N/A |
| Local Enforcement Agency: | City of Los Angeles Dept of Building and Safety |
| Maximun Depth Fill(Ft): | Not reported |
| Permitted Capacity: | 500 |
| Present Use: | Chipping and Grinding Activity Fac./ Op. |
| Remaining Capacity(Million): | N/A |
| Status: | Active |
| Waste Accepted: | Construction & Demolition;Green Materials;Household Trash;Industrial Non-Hazardous;Inert;Metals; |
| Hours of Operation: | Monday thru Friday: 6:00am to 5:00pm; Saturday: 6:00am to 3:00pm |
| Disposal Area (Acre): | Not reported |

Detail As Of 01/2014:

| | |
|---|---|
| Operator Name: | American Reclamation Inc. |
| Operator Address: | 4560 Doran ST. |
| Operator City/State/Zip: | Los Angeles, CA 90039-1006 |
| Operator Contact: | John Gasparian |
| Operator Telephone: | (323) 245-5133 |
| Operator Email: | joe@socoastrec.com |
| Owner Name: | Glendale Metals and Recycling, Inc. |
| Owner Address: | 4560 DORAN ST. |
| Owner City/State/Zip: | LOS ANGELES, CA 90039 |
| Owner Contact: | Craig Doerr |
| Owner Telephone: | (818) 552-4074 |
| Owner Email: | craig@socoastrec.com |

---

**L70** **SELLARS PRODUCTS, INC.** **WIP** **S106769429**
**SSE** **4520 W DORAN ST** **N/A**
**1/8-1/4** **LOS ANGELES, CA 90039**
**0.161 mi.**
**850 ft.** **Site 6 of 8 in cluster L**

**Relative:**
**Lower**

**Actual:**
**451 ft.**

WIP:

| | |
|---|---|
| Region: | 4 |
| File Number: | 113.0417 |
| **File Status:** | **Historical** |
| Staff: | MH |
| Facility Suite: | Not reported |

---

**L71** **SOUTH COAST RECYCLING, INC.** **WIP** **S107257208**
**SSE** **5487 W SAN FERNANDO RD** **N/A**
**1/8-1/4** **LOS ANGELES, CA 90039**
**0.161 mi.**
**850 ft.** **Site 7 of 8 in cluster L**

**Relative:**
**Lower**

**Actual:**
**451 ft.**

WIP:

| | |
|---|---|
| Region: | 4 |
| File Number: | 113.5416 |
| **File Status:** | **Historical** |
| Staff: | MH |
| Facility Suite: | Not reported |

**L72 SOUTH COAST RECYCLING SWF/LF S102279206**
**SSE 4560 DORAN ST LUST N/A**
**1/8-1/4 LOS ANGELES, CA 90039 LOS ANGELES CO. HMS**
**0.161 mi. NPDES**
**850 ft. Site 8 of 8 in cluster L LA Co. Site Mitigation**

**Relative:**
**Lower**

**Actual:**
**451 ft.**

LOS ANGELES CO. LF:

| | |
|---|---|
| Site ID: | 309 |
| Alt. Address: | Not reported |
| Site Contact: | Not reported |
| Site Contact Phone: | (888) 999-9330 |
| Site Email: | Not reported |
| Site Website: | www.americanreclamationinc.com |
| Site Type: | Waste Hauler |
| Site SWIS Number: | 19-AS-0446 |
| Beginning Operation Date: | Not reported |
| Ending Operation Date: | Not reported |
| Local Enforcement Agency: | Not reported |
| Maximun Depth Fill(Ft): | Not reported |
| Permitted Capacity: | Not reported |
| Present Use: | Not reported |
| Remaining Capacity(Million): | Not reported |
| Status: | Active |
| Waste Accepted: | Not reported |
| Hours of Operation: | Mon to Fri, 7 AM - 5 PM; Sat, 7 AM - 12 PM |
| Disposal Area (Acre): | Not reported |

Detail As Of 01/2014:

| | |
|---|---|
| Operator Name: | Not reported |
| Operator Address: | Not reported |
| Operator City/State/Zip: | Not reported |
| Operator Contact: | Not reported |
| Operator Telephone: | Not reported |
| Operator Email: | Not reported |
| Owner Name: | Not reported |
| Owner Address: | Not reported |
| Owner City/State/Zip: | Not reported |
| Owner Contact: | Not reported |
| Owner Telephone: | Not reported |
| Owner Email: | Not reported |

LUST:

| | |
|---|---|
| Region: | STATE |
| Global Id: | T10000003378 |
| Latitude: | 34.1529264 |
| Longitude: | -118.2777559 |
| Case Type: | LUST Cleanup Site |
| Status: | Completed - Case Closed |
| Status Date: | 05/22/2012 |
| Lead Agency: | LOS ANGELES, CITY OF |
| Case Worker: | EL |
| Local Agency: | LOS ANGELES, CITY OF |
| RB Case Number: | Not reported |
| LOC Case Number: | Not reported |
| File Location: | Not reported |
| Potential Media Affect: | Not reported |
| Potential Contaminants of Concern: | Not reported |
| Site History: | Not reported |

**SOUTH COAST RECYCLING (Continued)** **S102279206**

Click here to access the California GeoTracker records for this facility:

Contact:

| | |
|---|---|
| Global Id: | T10000003378 |
| Contact Type: | Local Agency Caseworker |
| Contact Name: | ELOY LUNA |
| Organization Name: | LOS ANGELES, CITY OF |
| Address: | 200 North Main Street, Suite 1780 |
| City: | LOS ANGELES |
| Email: | eloy.luna@lacity.org |
| Phone Number: | Not reported |

Status History:

| | |
|---|---|
| Global Id: | T10000003378 |
| Status: | Completed - Case Closed |
| Status Date: | 05/22/2012 |
| Global Id: | T10000003378 |
| Status: | Open - Case Begin Date |
| Status Date: | 06/17/1992 |
| Global Id: | T10000003378 |
| Status: | Open - Verification Monitoring |
| Status Date: | 11/08/2011 |

Regulatory Activities:

| | |
|---|---|
| Global Id: | T10000003378 |
| Action Type: | ENFORCEMENT |
| Date: | 02/15/2012 |
| Action: | Staff Letter |
| Global Id: | T10000003378 |
| Action Type: | ENFORCEMENT |
| Date: | 05/22/2012 |
| Action: | Closure/No Further Action Letter |
| Global Id: | T10000003378 |
| Action Type: | Other |
| Date: | 06/17/1992 |
| Action: | Leak Discovery |
| Global Id: | T10000003378 |
| Action Type: | Other |
| Date: | 08/26/2011 |
| Action: | Leak Reported |
| Global Id: | T10000003378 |
| Action Type: | ENFORCEMENT |
| Date: | 11/07/2011 |
| Action: | Staff Letter |

LOS ANGELES CO. HMS:

| | |
|---|---|
| Region: | LA |
| Permit Category: | Not reported |

**SOUTH COAST RECYCLING (Continued)** **S102279206**

Facility Id: 023427-032706
Facility Type: Not reported
Facility Status: OPEN
Area: 5F
Permit Number: Not reported
Permit Status: Not reported

NPDES:

| | |
|---|---|
| Npdes Number: | Not reported |
| Facility Status: | Not reported |
| Agency Id: | Not reported |
| Region: | 4 |
| Regulatory Measure Id: | 189436 |
| Order No: | Not reported |
| Regulatory Measure Type: | Industrial |
| Place Id: | Not reported |
| WDID: | 4 19I004889 |
| Program Type: | Not reported |
| Adoption Date Of Regulatory Measure: | Not reported |
| Effective Date Of Regulatory Measure: | Not reported |
| Expiration Date Of Regulatory Measure: | Not reported |
| Termination Date Of Regulatory Measure: | Not reported |
| Discharge Name: | Not reported |
| Discharge Address: | Not reported |
| Discharge City: | Not reported |
| Discharge State: | Not reported |
| Discharge Zip: | Not reported |
| RECEIVED DATE: | 5/9/2008 |
| PROCESSED DATE: | 4/7/1992 |
| STATUS CODE NAME: | Active |
| STATUS DATE: | 4/7/1992 |
| PLACE SIZE: | 3.5 |
| PLACE SIZE UNIT: | Acres |
| FACILITY CONTACT NAME: | John Gasparian |
| FACILITY CONTACT TITLE: | President |
| FACILITY CONTACT PHONE: | 818-552-4068 |
| FACILITY CONTACT PHONE EXT: | Not reported |
| FACILITY CONTACT EMAIL: | john@socoastrec.com |
| OPERATOR NAME: | South Coast Recycling |
| OPERATOR ADDRESS: | 4560 Doran St |
| OPERATOR CITY: | Los Angeles |
| OPERATOR STATE: | California |
| OPERATOR ZIP: | 90039 |
| OPERATOR CONTACT NAME: | John R Gasparian |
| OPERATOR CONTACT TITLE: | Not reported |
| OPERATOR CONTACT PHONE: | 323-245-5133 |
| OPERATOR CONTACT PHONE EXT: | Not reported |
| OPERATOR CONTACT EMAIL: | john@socoastrec.com |
| OPERATOR TYPE: | Private Business |
| DEVELOPER NAME: | Not reported |
| DEVELOPER ADDRESS: | Not reported |
| DEVELOPER CITY: | Not reported |
| DEVELOPER STATE: | California |
| DEVELOPER ZIP: | Not reported |
| DEVELOPER CONTACT NAME: | Not reported |
| DEVELOPER CONTACT TITLE: | Not reported |
| CONSTYPE LINEAR UTILITY IND: | Not reported |

**SOUTH COAST RECYCLING (Continued)** **S102279206**

| | |
|---|---|
| EMERGENCY PHONE NO: | 818-552-4068 |
| EMERGENCY PHONE EXT: | Not reported |
| CONSTYPE ABOVE GROUND IND: | Not reported |
| CONSTYPE BELOW GROUND IND: | Not reported |
| CONSTYPE CABLE LINE IND: | Not reported |
| CONSTYPE COMM LINE IND: | Not reported |
| CONSTYPE COMMERTIAL IND: | Not reported |
| CONSTYPE ELECTRICAL LINE IND: | Not reported |
| CONSTYPE GAS LINE IND: | Not reported |
| CONSTYPE INDUSTRIAL IND: | Not reported |
| CONSTYPE OTHER DESRIPTION: | Not reported |
| CONSTYPE OTHER IND: | Not reported |
| CONSTYPE RECONS IND: | Not reported |
| CONSTYPE RESIDENTIAL IND: | Not reported |
| CONSTYPE TRANSPORT IND: | Not reported |
| CONSTYPE UTILITY DESCRIPTION: | Not reported |
| CONSTYPE UTILITY IND: | Not reported |
| CONSTYPE WATER SEWER IND: | Not reported |
| DIR DISCHARGE USWATER IND: | N |
| RECEIVING WATER NAME: | Los Angeles River |
| CERTIFIER NAME: | John Gasparian |
| CERTIFIER TITLE: | President |
| CERTIFICATION DATE: | 11-AUG-15 |
| PRIMARY SIC: | 5093-Scrap and Waste Materials |
| SECONDARY SIC: | Not reported |
| TERTIARY SIC: | Not reported |

| | |
|---|---|
| Npdes Number: | CAS000001 |
| Facility Status: | Active |
| Agency Id: | 0 |
| Region: | 4 |
| Regulatory Measure Id: | 189436 |
| Order No: | 97-03-DWQ |
| Regulatory Measure Type: | Enrollee |
| Place Id: | Not reported |
| WDID: | 4 19I004889 |
| Program Type: | Industrial |
| Adoption Date Of Regulatory Measure: | Not reported |
| Effective Date Of Regulatory Measure: | 04/07/1992 |
| Expiration Date Of Regulatory Measure: | Not reported |
| Termination Date Of Regulatory Measure: | Not reported |
| Discharge Name: | South Coast Recycling |
| Discharge Address: | 4560 Doran St |
| Discharge City: | Los Angeles |
| Discharge State: | California |
| Discharge Zip: | 90039 |
| RECEIVED DATE: | Not reported |
| PROCESSED DATE: | Not reported |
| STATUS CODE NAME: | Not reported |
| STATUS DATE: | Not reported |
| PLACE SIZE: | Not reported |
| PLACE SIZE UNIT: | Not reported |
| FACILITY CONTACT NAME: | Not reported |
| FACILITY CONTACT TITLE: | Not reported |
| FACILITY CONTACT PHONE: | Not reported |
| FACILITY CONTACT PHONE EXT: | Not reported |
| FACILITY CONTACT EMAIL: | Not reported |

**SOUTH COAST RECYCLING (Continued)** **S102279206**

| | |
|---|---|
| OPERATOR NAME: | Not reported |
| OPERATOR ADDRESS: | Not reported |
| OPERATOR CITY: | Not reported |
| OPERATOR STATE: | Not reported |
| OPERATOR ZIP: | Not reported |
| OPERATOR CONTACT NAME: | Not reported |
| OPERATOR CONTACT TITLE: | Not reported |
| OPERATOR CONTACT PHONE: | Not reported |
| OPERATOR CONTACT PHONE EXT: | Not reported |
| OPERATOR CONTACT EMAIL: | Not reported |
| OPERATOR TYPE: | Not reported |
| DEVELOPER NAME: | Not reported |
| DEVELOPER ADDRESS: | Not reported |
| DEVELOPER CITY: | Not reported |
| DEVELOPER STATE: | Not reported |
| DEVELOPER ZIP: | Not reported |
| DEVELOPER CONTACT NAME: | Not reported |
| DEVELOPER CONTACT TITLE: | Not reported |
| CONSTYPE LINEAR UTILITY IND: | Not reported |
| EMERGENCY PHONE NO: | Not reported |
| EMERGENCY PHONE EXT: | Not reported |
| CONSTYPE ABOVE GROUND IND: | Not reported |
| CONSTYPE BELOW GROUND IND: | Not reported |
| CONSTYPE CABLE LINE IND: | Not reported |
| CONSTYPE COMM LINE IND: | Not reported |
| CONSTYPE COMMERTIAL IND: | Not reported |
| CONSTYPE ELECTRICAL LINE IND: | Not reported |
| CONSTYPE GAS LINE IND: | Not reported |
| CONSTYPE INDUSTRIAL IND: | Not reported |
| CONSTYPE OTHER DESRIPTION: | Not reported |
| CONSTYPE OTHER IND: | Not reported |
| CONSTYPE RECONS IND: | Not reported |
| CONSTYPE RESIDENTIAL IND: | Not reported |
| CONSTYPE TRANSPORT IND: | Not reported |
| CONSTYPE UTILITY DESCRIPTION: | Not reported |
| CONSTYPE UTILITY IND: | Not reported |
| CONSTYPE WATER SEWER IND: | Not reported |
| DIR DISCHARGE USWATER IND: | Not reported |
| RECEIVING WATER NAME: | Not reported |
| CERTIFIER NAME: | Not reported |
| CERTIFIER TITLE: | Not reported |
| CERTIFICATION DATE: | Not reported |
| PRIMARY SIC: | Not reported |
| SECONDARY SIC: | Not reported |
| TERTIARY SIC: | Not reported |

LA Co. Site Mitigation:

| | |
|---|---|
| Facility ID: | FA0009176 |
| Site ID: | SD0010548 |
| Jurisdiction: | County |
| Case ID: | RO0010548 |
| Abated: | Yes |
| Assigned To: | Kim Clark |
| Entered Date: | 05/11/2004 |
| Abated Date: | 01/27/1997 |

**K73 SE 1/8-1/4 0.167 mi. 880 ft.** | **MOULDER BROTHERS**
**905 W DORAN STREET**
**GLENDALE, CA 91201** | **HIST UST** | **U001566854**
**N/A**

**Site 4 of 6 in cluster K**

**Relative: Higher**

**Actual: 473 ft.**

HIST UST:

| | |
|---|---|
| File Number: | 000280CF |
| URL: | http://geotracker.waterboards.ca.gov/ustpdfs/pdf/000280CF.pdf |
| Region: | STATE |
| Facility ID: | 00000055676 |
| Facility Type: | Other |
| Other Type: | CONTRACTOR |
| Contact Name: | JOHN MOULDER |
| Telephone: | 2132457755 |
| Owner Name: | MOULDER BROTHERS |
| Owner Address: | 511 WESTERN AVENUE |
| Owner City,St,Zip: | GLENDALE, CA 91201 |
| Total Tanks: | 0001 |
| | |
| Tank Num: | 001 |
| Container Num: | 1 |
| Year Installed: | 1979 |
| Tank Capacity: | 00005000 |
| Tank Used for: | PRODUCT |
| Type of Fuel: | UNLEADED |
| Container Construction Thickness: | Not reported |
| Leak Detection: | None |

Click here for Geo Tracker PDF:

---

**M74 SE 1/8-1/4 0.167 mi. 884 ft.** | **HARRINGTON TOOLS**
**5420-5440A-C WEST SAN FERNANDO ROAD**
**GLENDALE, CA 91203** | **SEMS PRP** | **1004654585**
**CAN000905894**

**Site 1 of 15 in cluster M**

**Relative: Lower**

**Actual: 466 ft.**

SEMS:

| | |
|---|---|
| Site ID: | 905894 |
| EPA ID: | CAN000905894 |
| Federal Facility: | N |
| NPL: | Not on the NPL |
| Non NPL Status: | Removal Only Site (No Site Assessment Work Needed) |

**Following information was gathered from the prior CERCLIS update completed in 10/2013:**

| | |
|---|---|
| Site ID: | 0905894 |
| EPA ID: | CAN000905894 |
| Facility County: | LOS ANGELES |
| Short Name: | HARRINGTON TOOLS |
| Congressional District: | Not reported |
| IFMS ID: | 09HR |
| SMSA Number: | Not reported |
| USGC Hydro Unit: | Not reported |
| Federal Facility: | Not a Federal Facility |
| DMNSN Number: | 0.00000 |
| Site Orphan Flag: | Not reported |
| RCRA ID: | Not reported |
| USGS Quadrangle: | Not reported |
| Site Init By Prog: | R |
| NFRAP Flag: | Not reported |

**HARRINGTON TOOLS (Continued)** **1004654585**

Parent ID: Not reported
RST Code: Not reported
EPA Region: 09
Classification: Not reported
Site Settings Code: Not reported
NPL Status: Not on the NPL
DMNSN Unit Code: Not reported
RBRAC Code: Not reported
RResp Fed Agency Code: Not reported
Non NPL Status: Removal Only Site (No Site Assessment Work Needed)
Non NPL Status Date: 02/25/02
Site Fips Code: 06037
CC Concurrence Date: / /
CC Concurrence FY: Not reported
Alias EPA ID: Not reported
Site FUDS Flag: Not reported

CERCLIS Site Contact Name(s):

Contact ID: 9270430.00000
Contact Name: Hedy Salter
Contact Tel: (415) 972-3046
Contact Title: On-Scene Coordinator (OSC)
Contact Email: Not reported

Contact ID: 9270496.00000
Contact Name: Bret Moxley
Contact Tel: (415) 972-3114
Contact Title: On-Scene Coordinator (OSC)
Contact Email: Not reported

Contact ID: 13003854.00000
Contact Name: Leslie Ramirez
Contact Tel: (415) 972-3978
Contact Title: Site Assessment Manager (SAM)
Contact Email: Not reported

Contact ID: 13003858.00000
Contact Name: Sharon Murray
Contact Tel: (415) 972-4250
Contact Title: Site Assessment Manager (SAM)
Contact Email: Not reported

Contact ID: 13004003.00000
Contact Name: Carl Brickner
Contact Tel: Not reported
Contact Title: Site Assessment Manager (SAM)
Contact Email: Not reported

Alias Comments: Not reported
Site Description: Not reported

CERCLIS Assessment History:

Action Code: 001
Action: UNILATERAL ADMIN ORDER
Date Started: / /
Date Completed: 11/21/01

**HARRINGTON TOOLS (Continued)** **1004654585**

| | |
|---|---|
| Priority Level: | Not reported |
| Operable Unit: | SITEWIDE |
| Primary Responsibility: | Federal Enforcement |
| Planning Status: | Not reported |
| Urgency Indicator: | Not reported |
| Action Anomaly: | Not reported |

For detailed financial records, contact EDR for a Site Report.:

| | |
|---|---|
| Action Code: | 001 |
| Action: | ADMINISTRATIVE RECORDS |
| Date Started: | 04/30/02 |
| Date Completed: | 04/30/02 |
| Priority Level: | Admin Record Compiled for a Removal Event |
| Operable Unit: | SITEWIDE |
| Primary Responsibility: | EPA Fund-Financed |
| Planning Status: | Not reported |
| Urgency Indicator: | Not reported |
| Action Anomaly: | Not reported |

For detailed financial records, contact EDR for a Site Report.:

| | |
|---|---|
| Action Code: | 001 |
| Action: | POTENTIALLY RESPONSIBLE PARTY REMOVAL |
| Date Started: | 04/12/02 |
| Date Completed: | 05/21/02 |
| Priority Level: | Cleaned up |
| Operable Unit: | SITEWIDE |
| Primary Responsibility: | Responsible Party |
| Planning Status: | Primary |
| Urgency Indicator: | Time Critical |
| Action Anomaly: | Not reported |

For detailed financial records, contact EDR for a Site Report.:

| | |
|---|---|
| Action Code: | 001 |
| Action: | Notice of Intent by All Parties |
| Date Started: | / / |
| Date Completed: | 01/22/05 |
| Priority Level: | Not reported |
| Operable Unit: | SITEWIDE |
| Primary Responsibility: | Not reported |
| Planning Status: | Not reported |
| Urgency Indicator: | Not reported |
| Action Anomaly: | Not reported |

For detailed financial records, contact EDR for a Site Report.:

| | |
|---|---|
| Action Code: | 001 |
| Action: | Lodged By DOJ |
| Date Started: | / / |
| Date Completed: | 03/11/08 |
| Priority Level: | Not reported |
| Operable Unit: | SITEWIDE |
| Primary Responsibility: | Federal Enforcement |
| Planning Status: | Not reported |

**HARRINGTON TOOLS (Continued)** **1004654585**

Urgency Indicator: Not reported
Action Anomaly: Not reported

For detailed financial records, contact EDR for a Site Report.:

Action Code: 001
Action: CONSENT DECREE
Date Started: 03/12/03
Date Completed: 06/02/08
Priority Level: Multi-Site-Subsequent Site
Operable Unit: SITEWIDE
Primary Responsibility: Federal Enforcement
Planning Status: Not reported
Urgency Indicator: Not reported
Action Anomaly: Not reported

For detailed financial records, contact EDR for a Site Report.:

Click this hyperlink while viewing on your computer to access
7 additional US CERCLIS Financial: record(s) in the EDR Site Report.

PRP name: HARRINGTON TOOLS, INC.
W.R. GRACE AND COMPANY

---

**M75** **L & W TRANSMISSIONS** **WIP** **S106769827**
**SE** **5440 W SAN FERNANDO RD** **N/A**
**1/8-1/4** **LOS ANGELES, CA 90039**
**0.167 mi.**
**884 ft.** **Site 2 of 15 in cluster M**

**Relative:**
**Lower**

**Actual:**
**466 ft.**

WIP:
Region: 4
File Number: 113.5420
**File Status:** **Historical**
Staff: RNEVAREZ
Facility Suite: 2

---

**M76** **ACTION FORKLIFT SERVICES** **WIP** **S106769865**
**SE** **5440 W SAN FERNANDO RD** **N/A**
**1/8-1/4** **LOS ANGELES, CA 90039**
**0.167 mi.**
**884 ft.** **Site 3 of 15 in cluster M**

**Relative:**
**Lower**

**Actual:**
**466 ft.**

WIP:
Region: 4
File Number: 113.6712
**File Status:** **Historical**
Staff: RNEVAREZ
Facility Suite: 3

**M77 SE 1/8-1/4 0.167 mi. 884 ft.** | **SUNLAND CHEMICAL & RESEARCH CORP.**
**5440 SAN FERNANDO RD WEST**
**LOS ANGELES, CA 90039**

**SWEEPS UST** | **1000277269**
**CA FID UST** | **CAD008261059**
**RCRA NonGen / NLR**
**HAZNET**

**Site 4 of 15 in cluster M**

**Relative: Lower**

**Actual: 466 ft.**

SWEEPS UST:

| | |
|---|---|
| Status: | Not reported |
| Comp Number: | 1351 |
| Number: | Not reported |
| Board Of Equalization: | Not reported |
| Referral Date: | Not reported |
| Action Date: | Not reported |
| Created Date: | Not reported |
| Owner Tank Id: | Not reported |
| SWRCB Tank Id: | 19-050-001351-000001 |
| Tank Status: | Not reported |
| Capacity: | 1000 |
| Active Date: | Not reported |
| Tank Use: | M.V. FUEL |
| STG: | PRODUCT |
| Content: | DIESEL |
| Number Of Tanks: | 2 |

| | |
|---|---|
| Status: | Not reported |
| Comp Number: | 1351 |
| Number: | Not reported |
| Board Of Equalization: | Not reported |
| Referral Date: | Not reported |
| Action Date: | Not reported |
| Created Date: | Not reported |
| Owner Tank Id: | Not reported |
| SWRCB Tank Id: | 19-050-001351-000002 |
| Tank Status: | Not reported |
| Capacity: | 1000 |
| Active Date: | Not reported |
| Tank Use: | M.V. FUEL |
| STG: | PRODUCT |
| Content: | REG UNLEADED |
| Number Of Tanks: | Not reported |

CA FID UST:

| | |
|---|---|
| Facility ID: | 19028213 |
| Regulated By: | UTNKI |
| Regulated ID: | 00018993 |
| Cortese Code: | Not reported |
| SIC Code: | Not reported |
| Facility Phone: | 2132457688 |
| Mail To: | Not reported |
| Mailing Address: | 201 MISSION ST |
| Mailing Address 2: | Not reported |
| Mailing City,St,Zip: | LOS ANGELES 900390000 |
| Contact: | Not reported |
| Contact Phone: | Not reported |
| DUNs Number: | Not reported |
| NPDES Number: | Not reported |
| EPA ID: | Not reported |
| Comments: | Not reported |
| Status: | Inactive |

**SUNLAND CHEMICAL & RESEARCH CORP. (Continued)** **1000277269**

RCRA NonGen / NLR:

| | |
|---|---|
| Date form received by agency: | 11/20/1981 |
| Facility name: | SUNLAND CHEMICAL & RESEARCH CORP. |
| Facility address: | 5440 SAN FERNANDO RD WEST<br>LOS ANGELES, CA 90039 |
| EPA ID: | CAD008261059 |
| Mailing address: | SAN FERNANDO RD WEST<br>LOS ANGELES, CA 90039 |
| Contact: | ENVIRONMENTAL MANAGER |
| Contact address: | 5440 SAN FERNANDO RD WEST<br>LOS ANGELES, CA 90039 |
| Contact country: | US |
| Contact telephone: | (213) 245-7688 |
| Contact email: | Not reported |
| EPA Region: | 09 |
| Classification: | Non-Generator |
| Description: | Handler: Non-Generators do not presently generate hazardous waste |

Owner/Operator Summary:

| | |
|---|---|
| Owner/operator name: | NOT REQUIRED |
| Owner/operator address: | NOT REQUIRED<br>NOT REQUIRED, ME 99999 |
| Owner/operator country: | Not reported |
| Owner/operator telephone: | (415) 555-1212 |
| Legal status: | Private |
| Owner/Operator Type: | Owner |
| Owner/Op start date: | Not reported |
| Owner/Op end date: | Not reported |

| | |
|---|---|
| Owner/operator name: | NOT REQUIRED |
| Owner/operator address: | NOT REQUIRED<br>NOT REQUIRED, ME 99999 |
| Owner/operator country: | Not reported |
| Owner/operator telephone: | (415) 555-1212 |
| Legal status: | Private |
| Owner/Operator Type: | Operator |
| Owner/Op start date: | Not reported |
| Owner/Op end date: | Not reported |

Handler Activities Summary:

| | |
|---|---|
| U.S. importer of hazardous waste: | No |
| Mixed waste (haz. and radioactive): | No |
| Recycler of hazardous waste: | No |
| Transporter of hazardous waste: | No |
| Treater, storer or disposer of HW: | No |
| Underground injection activity: | No |
| On-site burner exemption: | No |
| Furnace exemption: | No |
| Used oil fuel burner: | No |
| Used oil processor: | No |
| User oil refiner: | No |
| Used oil fuel marketer to burner: | No |
| Used oil Specification marketer: | No |
| Used oil transfer facility: | No |
| Used oil transporter: | No |

**SUNLAND CHEMICAL & RESEARCH CORP. (Continued)** **1000277269**

Violation Status: No violations found

HAZNET:

envid: 1000277269
Year: 2013
GEPAID: CAC002723109
Contact: JOHN GASPARYAN
Telephone: 6262552233
Mailing Name: Not reported
Mailing Address: PO BOX 3983
Mailing City,St,Zip: GLENDALE, CA 912210983
Gen County: Los Angeles
TSD EPA ID: CAT000613893
TSD County: Los Angeles
Waste Category: Not reported
Disposal Method: Storage, Bulking, And/Or Transfer Off Site--No Treatment/Reovery (H010-H129) Or (H131-H135)
Tons: 0.45
Cat Decode: Not reported
Method Decode: Storage, Bulking, And/Or Transfer Off Site--No Treatment/Reovery (H010-H129) Or (H131-H135)
Facility County: Not reported

envid: 1000277269
Year: 2006
GEPAID: CAD008261059
Contact: MAX COHEN - PRESIDENT
Telephone: 8182449600
Mailing Name: Not reported
Mailing Address: 5447 W SAN FERNANDO RD
Mailing City,St,Zip: LOS ANGELES, CA 900390000
Gen County: Not reported
TSD EPA ID: CAT080033681
TSD County: Not reported
Waste Category: Unspecified organic liquid mixture
Disposal Method: Recycler
Tons: 0.22
Cat Decode: Unspecified organic liquid mixture
Method Decode: Recycler
Facility County: Los Angeles

envid: 1000277269
Year: 2006
GEPAID: CAD008261059
Contact: MAX COHEN - PRESIDENT
Telephone: 8182449600
Mailing Name: Not reported
Mailing Address: 5447 W SAN FERNANDO RD
Mailing City,St,Zip: LOS ANGELES, CA 900390000
Gen County: Not reported
TSD EPA ID: CAD008252405
TSD County: Not reported
Waste Category: Off-specification, aged or surplus organics
Disposal Method: Recycler
Tons: 0.84
Cat Decode: Off-specification, aged or surplus organics
Method Decode: Recycler
Facility County: Los Angeles

**SUNLAND CHEMICAL & RESEARCH CORP. (Continued)** **1000277269**

| | |
|---|---|
| envid: | 1000277269 |
| Year: | 2006 |
| GEPAID: | CAD008261059 |
| Contact: | MAX COHEN - PRESIDENT |
| Telephone: | 8182449600 |
| Mailing Name: | Not reported |
| Mailing Address: | 5447 W SAN FERNANDO RD |
| Mailing City,St,Zip: | LOS ANGELES, CA 900390000 |
| Gen County: | Not reported |
| TSD EPA ID: | CAD008364432 |
| TSD County: | Not reported |
| Waste Category: | Off-specification, aged or surplus organics |
| Disposal Method: | Treatment, Tank |
| Tons: | 0.22 |
| Cat Decode: | Off-specification, aged or surplus organics |
| Method Decode: | Treatment, Tank |
| Facility County: | Los Angeles |

| | |
|---|---|
| envid: | 1000277269 |
| Year: | 2006 |
| GEPAID: | CAD008261059 |
| Contact: | MAX COHEN - PRESIDENT |
| Telephone: | 8182449600 |
| Mailing Name: | Not reported |
| Mailing Address: | 5447 W SAN FERNANDO RD |
| Mailing City,St,Zip: | LOS ANGELES, CA 900390000 |
| Gen County: | Not reported |
| TSD EPA ID: | CAD008488025 |
| TSD County: | Not reported |
| Waste Category: | Unspecified aqueous solution |
| Disposal Method: | Recycler |
| Tons: | 0.45 |
| Cat Decode: | Unspecified aqueous solution |
| Method Decode: | Recycler |
| Facility County: | Los Angeles |

Click this hyperlink while viewing on your computer to access
7 additional CA_HAZNET: record(s) in the EDR Site Report.

---

**M78** **GLENDALE CARBURETORS** **WIP** **S104583461**
**SE** **5440 W SAN FERNANDO RD** **N/A**
**1/8-1/4** **LOS ANGELES, CA 90039**
**0.167 mi.**
**884 ft.** **Site 5 of 15 in cluster M**

**Relative:**
**Lower**

**Actual:**
**466 ft.**

WIP:

| | |
|---|---|
| Region: | 4 |
| File Number: | 113.6713 |
| **File Status:** | **Historical** |
| Staff: | RNEVAREZ |
| Facility Suite: | 1 |

**M79** **SUNLAND CHEMICAL AND RESEARCH CO** **HIST UST** **S105672967**
**SE** **5447 SAN FERNANDO RD W** **CHMIRS** **N/A**
**1/8-1/4** **LOS ANGELES, CA 90039** **WDS**
**0.167 mi.** **WIP**
**884 ft.** **Site 6 of 15 in cluster M**

**Relative:**
**Lower**

**Actual:**
**466 ft.**

HIST UST:

| | |
|---|---|
| File Number: | 000288F7 |
| URL: | http://geotracker.waterboards.ca.gov/ustpdfs/pdf/000288F7.pdf |
| Region: | Not reported |
| Facility ID: | Not reported |
| Facility Type: | Not reported |
| Other Type: | Not reported |
| Contact Name: | Not reported |
| Telephone: | Not reported |
| Owner Name: | Not reported |
| Owner Address: | Not reported |
| Owner City,St,Zip: | Not reported |
| Total Tanks: | Not reported |
| | |
| Tank Num: | Not reported |
| Container Num: | Not reported |
| Year Installed: | Not reported |
| Tank Capacity: | Not reported |
| Tank Used for: | Not reported |
| Type of Fuel: | Not reported |
| Container Construction Thickness: | Not reported |
| Leak Detection: | Not reported |

Click here for Geo Tracker PDF:

CHMIRS:

| | |
|---|---|
| OES Incident Number: | 1-4362 |
| OES notification: | 07/30/2001 |
| OES Date: | Not reported |
| OES Time: | Not reported |
| **Date Completed:** | **Not reported** |
| Property Use: | Not reported |
| Agency Id Number: | Not reported |
| Agency Incident Number: | Not reported |
| Time Notified: | Not reported |
| Time Completed: | Not reported |
| Surrounding Area: | Not reported |
| Estimated Temperature: | Not reported |
| Property Management: | Not reported |
| More Than Two Substances Involved?: | Not reported |
| Resp Agncy Personel # Of Decontaminated: | Not reported |
| Responding Agency Personel # Of Injuries: | Not reported |
| Responding Agency Personel # Of Fatalities: | Not reported |
| Others Number Of Decontaminated: | Not reported |
| Others Number Of Injuries: | Not reported |
| Others Number Of Fatalities: | Not reported |
| Vehicle Make/year: | Not reported |
| Vehicle License Number: | Not reported |
| Vehicle State: | Not reported |
| Vehicle Id Number: | Not reported |
| CA DOT PUC/ICC Number: | Not reported |
| Company Name: | Not reported |
| Reporting Officer Name/ID: | Not reported |

**SUNLAND CHEMICAL AND RESEARCH CO (Continued)** **S105672967**

| | |
|---|---|
| Report Date: | Not reported |
| Facility Telephone: | Not reported |
| Waterway Involved: | No |
| Waterway: | Not reported |
| Spill Site: | Not reported |
| Cleanup By: | Reporting Party |
| Containment: | Not reported |
| What Happened: | Not reported |
| Type: | Not reported |
| Measure: | Not reported |
| Other: | Not reported |
| Date/Time: | Not reported |
| Year: | 2001 |
| Agency: | Brenntag West |
| Incident Date: | 7/30/200112:00:00 AM |
| Admin Agency: | Los Angeles City Fire Department |
| Amount: | Not reported |
| Contained: | Yes |
| Site Type: | Road |
| E Date: | Not reported |
| Substance: | Hydrofluoric Acid 70% |
| Gallons: | 1 |
| Unknown: | 0.000000 |
| Substance #2: | Not reported |
| Substance #3: | Not reported |
| Evacuations: | 0 |
| Number of Injuries: | 0 |
| Number of Fatalities: | 0 |
| #1 Pipeline: | Not reported |
| #2 Pipeline: | Not reported |
| #3 Pipeline: | Not reported |
| #1 Vessel >= 300 Tons: | Not reported |
| #2 Vessel >= 300 Tons: | Not reported |
| #3 Vessel >= 300 Tons: | Not reported |
| Evacs: | Not reported |
| Injuries: | Not reported |
| Fatals: | Not reported |
| Comments: | Not reported |
| Description: | A driver of a tractor trailer truck noticed fumes coming from a drum of hydrofluoric acid to unknown reason. |

WDS:

| | |
|---|---|
| Facility ID: | 4 19I000812 |
| Facility Type: | Other - Does not fall into the category of Municipal/Domestic, Industrial, Agricultural or Solid Waste (Class I, II or III) |
| Facility Status: | Active - Any facility with a continuous or seasonal discharge that is under Waste Discharge Requirements. |
| NPDES Number: | CAS000001 The 1st 2 characters designate the state. The remaining 7 are assigned by the Regional Board |
| Subregion: | 4 |
| Facility Telephone: | 8182449600 |
| Facility Contact: | Max Cohen/Serge Dadone |
| Agency Name: | SUNLAND CHEMICAL & RESEARCH CO |
| Agency Address: | Not reported |
| Agency City,St,Zip: | 0 |
| Agency Contact: | Not reported |

**SUNLAND CHEMICAL AND RESEARCH CO (Continued)** **S105672967**

Agency Telephone: Not reported
Agency Type: Private
SIC Code: 2899
SIC Code 2: Not reported
Primary Waste Type: Designated/Influent or Solid Wastes that pose a significant threat to water quality because of their high concentrations (E.G., BOD, Hardness, TRF, Chloride). 'Manageable' hazardous wastes (E.G., inorganic salts and heavy metals) are included in this category.
Primary Waste: STORMS
Waste Type2: Not reported
Waste2: Stormwater Runoff
Primary Waste Type: Designated/Influent or Solid Wastes that pose a significant threat to water quality because of their high concentrations (E.G., BOD, Hardness, TRF, Chloride). 'Manageable' hazardous wastes (E.G., inorganic salts and heavy metals) are included in this category.
Secondary Waste: Not reported
Secondary Waste Type: Not reported
Design Flow: 0
Baseline Flow: 0
Reclamation: No reclamation requirements associated with this facility.
POTW: The facility is not a POTW.
Treat To Water: Minor Threat to Water Quality. A violation of a regional board order should cause a relatively minor impairment of beneficial uses compared to a major or minor threat. Not: All nurds without a TTWQ will be considered a minor threat to water quality unless coded at a higher Level. A Zero (0) may be used to code those NURDS that are found to represent no threat to water quality.
Complexity: Category C - Facilities having no waste treatment systems, such as cooling water dischargers or thosewho must comply through best management practices, facilities with passive waste treatment and disposal systems, such as septic systems with subsurface disposal, or dischargers having waste storage systems with land disposal such as dairy waste ponds.

WIP:
Region: 4
File Number: 113.5460
**File Status: Historical**
Staff: UNIDENTIFIED
Facility Suite: Not reported

---

**M80** **SHIRMAR TRUCKING** **RCRA NonGen / NLR** **1000364895**
**SE** **5440 SAN FERNANDO RD WEST** **FINDS** **CAD093061315**
**1/8-1/4** **LOS ANGELES, CA 90039** **ECHO**
**0.167 mi.**
**884 ft.** **Site 7 of 15 in cluster M**

**Relative:**
**Lower**

**Actual:**
**466 ft.**

RCRA NonGen / NLR:
Date form received by agency: 11/20/1981
Facility name: SHIRMAR TRUCKING
Facility address: 5440 SAN FERNANDO RD WEST
LOS ANGELES, CA 90039
EPA ID: CAD093061315
Mailing address: SAN FERNANDO RD WEST
LOS ANGELES, CA 90039
Contact: ENVIRONMENTAL MANAGER
Contact address: 5440 SAN FERNANDO RD WEST

**SHIRMAR TRUCKING (Continued)** **1000364895**

| | |
|---|---|
| | LOS ANGELES, CA 90039 |
| Contact country: | US |
| Contact telephone: | (213) 245-5385 |
| Contact email: | Not reported |
| EPA Region: | 09 |
| Land type: | Facility is not located on Indian land. Additional information is not known. |
| Classification: | Non-Generator |
| Description: | Handler: Non-Generators do not presently generate hazardous waste |

Owner/Operator Summary:

| | |
|---|---|
| Owner/operator name: | NOT REQUIRED |
| Owner/operator address: | NOT REQUIRED |
| | NOT REQUIRED, ME 99999 |
| Owner/operator country: | Not reported |
| Owner/operator telephone: | (415) 555-1212 |
| Legal status: | Private |
| Owner/Operator Type: | Owner |
| Owner/Op start date: | Not reported |
| Owner/Op end date: | Not reported |

| | |
|---|---|
| Owner/operator name: | NOT REQUIRED |
| Owner/operator address: | NOT REQUIRED |
| | NOT REQUIRED, ME 99999 |
| Owner/operator country: | Not reported |
| Owner/operator telephone: | (415) 555-1212 |
| Legal status: | Private |
| Owner/Operator Type: | Operator |
| Owner/Op start date: | Not reported |
| Owner/Op end date: | Not reported |

Handler Activities Summary:

| | |
|---|---|
| U.S. importer of hazardous waste: | No |
| Mixed waste (haz. and radioactive): | No |
| Recycler of hazardous waste: | No |
| Transporter of hazardous waste: | No |
| Treater, storer or disposer of HW: | No |
| Underground injection activity: | No |
| On-site burner exemption: | No |
| Furnace exemption: | No |
| Used oil fuel burner: | No |
| Used oil processor: | No |
| User oil refiner: | No |
| Used oil fuel marketer to burner: | No |
| Used oil Specification marketer: | No |
| Used oil transfer facility: | No |
| Used oil transporter: | No |

Violation Status: No violations found

Evaluation Action Summary:

| | |
|---|---|
| Evaluation date: | 05/14/1985 |
| Evaluation: | COMPLIANCE EVALUATION INSPECTION ON-SITE |
| Area of violation: | Not reported |
| Date achieved compliance: | Not reported |
| Evaluation lead agency: | State |

**SHIRMAR TRUCKING (Continued)** **1000364895**

Evaluation date: 05/14/1985
Evaluation: NON-FINANCIAL RECORD REVIEW
Area of violation: Not reported
Date achieved compliance: Not reported
Evaluation lead agency: State

FINDS:

Registry ID: 110009532238

Environmental Interest/Information System
RCRAInfo is a national information system that supports the Resource Conservation and Recovery Act (RCRA) program through the tracking of events and activities related to facilities that generate, transport, and treat, store, or dispose of hazardous waste. RCRAInfo allows RCRA program staff to track the notification, permit, compliance, and corrective action activities required under RCRA.

ECHO:
Envid: 1000364895
Registry ID: 110009532238
DFR URL: http://echo.epa.gov/detailed_facility_report?fid=110009532238

---

**M81** **SUNLAND CHEMICAL** **SEMS** **1004654589**
**SE** **5440A-C W SAN FERNANDO RD** **PRP** **CAN000905898**
**1/8-1/4** **GLENDALE, CA 91203**
**0.167 mi.**
**884 ft.** **Site 8 of 15 in cluster M**

**Relative:**
**Lower**

**Actual:**
**466 ft.**

SEMS:
Site ID: 905898
EPA ID: CAN000905898
Federal Facility: N
NPL: Not on the NPL
Non NPL Status: Removal Only Site (No Site Assessment Work Needed)

**Following information was gathered from the prior CERCLIS update completed in 10/2013:**
Site ID: 0905898
EPA ID: CAN000905898
Facility County: LOS ANGELES
Short Name: SUNLAND CHEMICAL
Congressional District: Not reported
IFMS ID: 09HN
SMSA Number: Not reported
USGC Hydro Unit: Not reported
Federal Facility: Not a Federal Facility
DMNSN Number: 0.00000
Site Orphan Flag: Not reported
RCRA ID: Not reported
USGS Quadrangle: Not reported
Site Init By Prog: R
NFRAP Flag: Not reported
Parent ID: Not reported
RST Code: Not reported
EPA Region: 09
Classification: Not reported
Site Settings Code: Not reported

**SUNLAND CHEMICAL (Continued)** **1004654589**

NPL Status: Not on the NPL
DMNSN Unit Code: Not reported
RBRAC Code: Not reported
RResp Fed Agency Code: Not reported
Non NPL Status: Removal Only Site (No Site Assessment Work Needed)
Non NPL Status Date: 04/26/02
Site Fips Code: 06037
CC Concurrence Date: / /
CC Concurrence FY: Not reported
Alias EPA ID: Not reported
Site FUDS Flag: Not reported

CERCLIS Site Contact Name(s):
Contact ID: 13003854.00000
Contact Name: Leslie Ramirez
Contact Tel: (415) 972-3978
Contact Title: Site Assessment Manager (SAM)
Contact Email: Not reported

Contact ID: 13003858.00000
Contact Name: Sharon Murray
Contact Tel: (415) 972-4250
Contact Title: Site Assessment Manager (SAM)
Contact Email: Not reported

Contact ID: 13004003.00000
Contact Name: Carl Brickner
Contact Tel: Not reported
Contact Title: Site Assessment Manager (SAM)
Contact Email: Not reported

CERCLIS Site Alias Name(s):
Alias ID: 101
Alias Name: SUNLAND CHEMICAL AND HARRINGTON TOOLS PROPERTIES
Alias Address: 5420-5440 WEST SAN FERNANDO ROAD
GLENDALE, CA 912031521
Alias Comments: Not reported
Site Description: Not reported

CERCLIS Assessment History:

Action Code: 001
Action: ADMINISTRATIVE ORDER ON CONSENT
Date Started: / /
Date Completed: 09/30/01
Priority Level: Not reported
Operable Unit: SITEWIDE
Primary Responsibility: Federal Enforcement
Planning Status: Not reported
Urgency Indicator: Not reported
Action Anomaly: Not reported

Action Code: 001
Action: POTENTIALLY RESPONSIBLE PARTY REMOVAL
Date Started: 03/28/02
Date Completed: 04/04/02

**SUNLAND CHEMICAL (Continued)** **1004654589**

| | |
|---|---|
| Priority Level: | Cleaned up |
| Operable Unit: | SITEWIDE |
| Primary Responsibility: | Responsible Party |
| Planning Status: | Not reported |
| Urgency Indicator: | Time Critical |
| Action Anomaly: | Not reported |

PRP name: SUNLAND CHEMICAL AND RESEARCH CORP.

---

**M82** **MTA VERMICULITE RAIL SPUR** **SEMS** **1005904133**
**SE** **5440 W SAN FERNANDO RD** **PRP** **CAN000905933**
**1/8-1/4** **LOS ANGELES, CA 90039** **LEAD SMELTERS**
**0.167 mi.**
**884 ft.** **Site 9 of 15 in cluster M**

**Relative:**
**Lower**

**Actual:**
**466 ft.**

SEMS:

| | |
|---|---|
| Site ID: | 905933 |
| EPA ID: | CAN000905933 |
| Federal Facility: | N |
| NPL: | Not on the NPL |
| Non NPL Status: | Removal Only Site (No Site Assessment Work Needed) |

**Following information was gathered from the prior CERCLIS update completed in 10/2013:**

| | |
|---|---|
| Site ID: | 0905933 |
| EPA ID: | CAN000905933 |
| Facility County: | LOS ANGELES |
| Short Name: | MTA VERMICULITE RAIL SPUR |
| Congressional District: | Not reported |
| IFMS ID: | 09JP |
| SMSA Number: | Not reported |
| USGC Hydro Unit: | Not reported |
| Federal Facility: | Not a Federal Facility |
| DMNSN Number: | 0.00000 |
| Site Orphan Flag: | Not reported |
| RCRA ID: | Not reported |
| USGS Quadrangle: | Not reported |
| Site Init By Prog: | R |
| NFRAP Flag: | Not reported |
| Parent ID: | Not reported |
| RST Code: | Not reported |
| EPA Region: | 09 |
| Classification: | Not reported |
| Site Settings Code: | Not reported |
| NPL Status: | Not on the NPL |
| DMNSN Unit Code: | Not reported |
| RBRAC Code: | Not reported |
| RResp Fed Agency Code: | Not reported |
| Non NPL Status: | Removal Only Site (No Site Assessment Work Needed) |
| Non NPL Status Date: | 08/02/02 |
| Site Fips Code: | 06037 |
| CC Concurrence Date: | / / |
| CC Concurrence FY: | Not reported |
| Alias EPA ID: | Not reported |
| Site FUDS Flag: | Not reported |

CERCLIS Site Contact Name(s):

**MTA VERMICULITE RAIL SPUR (Continued)** **1005904133**

Contact ID: 9270496.00000
Contact Name: Bret Moxley
Contact Tel: (415) 972-3114
Contact Title: On-Scene Coordinator (OSC)
Contact Email: Not reported

Contact ID: 9270430.00000
Contact Name: Hedy Salter
Contact Tel: (415) 972-3046
Contact Title: On-Scene Coordinator (OSC)
Contact Email: Not reported

Contact ID: 13003854.00000
Contact Name: Leslie Ramirez
Contact Tel: (415) 972-3978
Contact Title: Site Assessment Manager (SAM)
Contact Email: Not reported

Contact ID: 13003858.00000
Contact Name: Sharon Murray
Contact Tel: (415) 972-4250
Contact Title: Site Assessment Manager (SAM)
Contact Email: Not reported

Contact ID: 13004003.00000
Contact Name: Carl Brickner
Contact Tel: Not reported
Contact Title: Site Assessment Manager (SAM)
Contact Email: Not reported

CERCLIS Site Alias Name(s):
Alias ID: 101
Alias Name: UNION PACIFIC RAIL ROAD
Alias Address: Not reported
Not reported
Alias ID: 101
Alias Comments: Not reported
Site Description: Formerly the rail spur for loading and unloading vermiculite at a W. R. Grace vermiculite expansion facility.

CERCLIS Assessment History:

Action Code: 001
Action: ADMINISTRATIVE ORDER ON CONSENT
Date Started: / /
Date Completed: 07/30/02
Priority Level: Not reported
Operable Unit: SITEWIDE
Primary Responsibility: Federal Enforcement
Planning Status: Not reported
Urgency Indicator: Not reported
Action Anomaly: Not reported

Action Code: 001
Action: POTENTIALLY RESPONSIBLE PARTY REMOVAL
Date Started: 01/17/03

**MTA VERMICULITE RAIL SPUR (Continued)** **1005904133**

| | |
|---|---|
| Date Completed: | 05/15/03 |
| Priority Level: | Cleaned up |
| Operable Unit: | SITEWIDE |
| Primary Responsibility: | Responsible Party |
| Planning Status: | Primary |
| Urgency Indicator: | Time Critical |
| Action Anomaly: | Not reported |

| | |
|---|---|
| Action Code: | 001 |
| Action: | PREPARATION OF COST DOCUMENT PACKAGE |
| Date Started: | / / |
| Date Completed: | 06/16/03 |
| Priority Level: | Not reported |
| Operable Unit: | SITEWIDE |
| Primary Responsibility: | Federal Enforcement |
| Planning Status: | Not reported |
| Urgency Indicator: | Not reported |
| Action Anomaly: | Not reported |

| | |
|---|---|
| Action Code: | 001 |
| Action: | REMOVAL |
| Date Started: | 12/16/02 |
| Date Completed: | 10/17/03 |
| Priority Level: | Cleaned up |
| Operable Unit: | SITEWIDE |
| Primary Responsibility: | EPA Fund-Financed |
| Planning Status: | Not reported |
| Urgency Indicator: | Time Critical |
| Action Anomaly: | Not reported |

PRP name: LOS ANGELES COUNTY METROPOLITAN TRANSIT AUTHORITY

Lead Smelter Sites:

| | |
|---|---|
| Site ID: | 0905933 |
| Facility Region Id: | 09 |
| NPL Status: | Not on the NPL |
| Federal Facility: | No |
| Primary Site Type Category Description: | Other |
| Site Type Category Description 1: | Manufacturing/Processing/Maintenance |
| Site Type Category Description 2: | Not reported |
| Site Type Category Description 3: | Not reported |
| Latitude: | Not reported |
| Longitude: | Not reported |

---

**I83** **DRAWSTRINGS** **WIP** **S106767665**
**NNW** **933 AIRWAY** **N/A**
**1/8-1/4** **GLENDALE, CA 91201**
**0.170 mi.**
**896 ft.** **Site 9 of 12 in cluster I**

**Relative:**
**Lower**

**Actual:**
**466 ft.**

WIP:

| | |
|---|---|
| Region: | 4 |
| File Number: | 109.0729 |
| **File Status:** | **Historical** |

**DRAWSTRINGS (Continued)** **S106767665**

Staff: MH
Facility Suite: Not reported

---

**I84**
**NW**
**1/8-1/4**
**0.170 mi.**
**899 ft.**

**GLENAIR INC**
**944 AIRWAY**
**GLENDALE, CA 91201**

**CHMIRS** **S106396312**
**WIP** **N/A**

**Site 10 of 12 in cluster I**

**Relative:**
**Lower**

**Actual:**
**466 ft.**

CHMIRS:

| | |
|---|---|
| OES Incident Number: | 3-1549 |
| OES notification: | 03/21/2003 |
| OES Date: | Not reported |
| OES Time: | Not reported |
| **Date Completed:** | **Not reported** |
| Property Use: | Not reported |
| Agency Id Number: | Not reported |
| Agency Incident Number: | Not reported |
| Time Notified: | Not reported |
| Time Completed: | Not reported |
| Surrounding Area: | Not reported |
| Estimated Temperature: | Not reported |
| Property Management: | Not reported |
| More Than Two Substances Involved?: | Not reported |
| Resp Agncy Personel # Of Decontaminated: | Not reported |
| Responding Agency Personel # Of Injuries: | Not reported |
| Responding Agency Personel # Of Fatalities: | Not reported |
| Others Number Of Decontaminated: | Not reported |
| Others Number Of Injuries: | Not reported |
| Others Number Of Fatalities: | Not reported |
| Vehicle Make/year: | Not reported |
| Vehicle License Number: | Not reported |
| Vehicle State: | Not reported |
| Vehicle Id Number: | Not reported |
| CA DOT PUC/ICC Number: | Not reported |
| Company Name: | Not reported |
| Reporting Officer Name/ID: | Not reported |
| Report Date: | Not reported |
| Facility Telephone: | Not reported |
| Waterway Involved: | Yes |
| Waterway: | Storm Drain |
| Spill Site: | Not reported |
| Cleanup By: | Responsible Party |
| Containment: | Not reported |
| What Happened: | Not reported |
| Type: | Not reported |
| Measure: | Not reported |
| Other: | Not reported |
| Date/Time: | Not reported |
| Year: | 2003 |
| Agency: | Glendale Fire Dept. |
| Incident Date: | 3/21/200312:00:00 AM |
| Admin Agency: | Glendale Fire Department |
| Amount: | Not reported |
| Contained: | Yes |
| Site Type: | Merchant/Business |
| E Date: | Not reported |
| Substance: | Cutting Oil |

**GLENAIR INC (Continued)** **S106396312**

| | |
|---|---|
| Gallons: | 55 |
| Unknown: | 0 |
| Substance #2: | Not reported |
| Substance #3: | Not reported |
| Evacuations: | 0 |
| Number of Injuries: | 0 |
| Number of Fatalities: | 0 |
| #1 Pipeline: | Not reported |
| #2 Pipeline: | Not reported |
| #3 Pipeline: | Not reported |
| #1 Vessel >= 300 Tons: | Not reported |
| #2 Vessel >= 300 Tons: | Not reported |
| #3 Vessel >= 300 Tons: | Not reported |
| Evacs: | Not reported |
| Injuries: | Not reported |
| Fatals: | Not reported |
| Comments: | Not reported |
| Description: | An employee placed a drum in a dumpster. Approximately 10 gallons of the cutting oil went into the storm drain. The storm drain flows to the Los Angeles River. |

WIP:

| | |
|---|---|
| Region: | 4 |
| File Number: | 109.0690 |
| **File Status:** | **Historical** |
| Staff: | MH |
| Facility Suite: | Not reported |

---

**M85**
**SE**
**1/8-1/4**
**0.171 mi.**
**905 ft.**

**JOE OF CALIFORNIA, INC.** **WIP** **S106769836**
**5476 W SAN FERNANDO RD** **N/A**
**LOS ANGELES, CA 90039**

**Site 10 of 15 in cluster M**

**Relative:**
**Lower**

**Actual:**
**465 ft.**

WIP:

| | |
|---|---|
| Region: | 4 |
| File Number: | 113.5461 |
| **File Status:** | **Historical** |
| Staff: | MH |
| Facility Suite: | Not reported |

---

**J86**
**NNW**
**1/8-1/4**
**0.172 mi.**
**906 ft.**

**CALIF. ELECTRICAL SERVICES** **WIP** **S106767397**
**5924 SAN FERNANDO RD** **N/A**
**GLENDALE, CA 91202**

**Site 2 of 5 in cluster J**

**Relative:**
**Higher**

**Actual:**
**468 ft.**

WIP:

| | |
|---|---|
| Region: | 4 |
| File Number: | 109.0024 |
| **File Status:** | **Historical** |
| Staff: | TB |
| Facility Suite: | Not reported |

**J87**
**NNW**
**1/8-1/4**
**0.174 mi.**
**918 ft.**

**ASSOCIATED INSTRUMENT PARTS**
**5930 SAN FERNANDO RD**
**GLENDALE, CA 91202**

**Site 3 of 5 in cluster J**

**Relative:**
**Higher**

**Actual:**
**468 ft.**

WIP:
Region: 4
File Number: 109.0025
**File Status:** **Historical**
Staff: TB
Facility Suite: Not reported

**WIP** **S106767398**
**N/A**

---

**J88**
**NNW**
**1/8-1/4**
**0.174 mi.**
**921 ft.**

**WALNUT CABINET SHOP**
**5932 SAN FERNANDO RD**
**GLENDALE, CA 91202**

**Site 4 of 5 in cluster J**

**Relative:**
**Higher**

**Actual:**
**468 ft.**

WIP:
Region: 4
File Number: 109.0026
**File Status:** **Historical**
Staff: TB
Facility Suite: Not reported

**WIP** **S106767399**
**N/A**

---

**K89**
**SE**
**1/8-1/4**
**0.176 mi.**
**929 ft.**

**DAYHAN ELECTRONICS**
**5524 SAN FERNANDO RD**
**GLENDALE, CA 91203**

**Site 5 of 6 in cluster K**

**Relative:**
**Higher**

**Actual:**
**471 ft.**

WIP:
Region: 4
File Number: 113.5383
**File Status:** **Historical**
Staff: RNEVAREZ
Facility Suite: Not reported

**WIP** **S106769814**
**N/A**

---

**I90**
**NNW**
**1/8-1/4**
**0.180 mi.**
**950 ft.**

**THE J P WEAVER CO**
**941 AIRWAY**
**GLENDALE, CA 91201**

**Site 11 of 12 in cluster I**

**Relative:**
**Lower**

**Actual:**
**467 ft.**

WIP:
Region: 4
File Number: 109.0730
**File Status:** **Historical**
Staff: UNIDENTIFIED
Facility Suite: Not reported

**WIP** **S106767666**
**N/A**

**M91 SSE 1/8-1/4 0.181 mi. 957 ft.** | **AIRCO ENGINEERING, INCORPORATE**
**5471 W SAN FERNANDO RD**
**LOS ANGELES, CA 90039** | **SWEEPS UST, CA FID UST, WIP** | **S101583599**
**N/A**

**Site 11 of 15 in cluster M**

**Relative: Lower**

**Actual: 464 ft.**

SWEEPS UST:

| | |
|---|---|
| Status: | Not reported |
| Comp Number: | 4827 |
| Number: | Not reported |
| Board Of Equalization: | Not reported |
| Referral Date: | Not reported |
| Action Date: | Not reported |
| Created Date: | Not reported |
| Owner Tank Id: | Not reported |
| SWRCB Tank Id: | Not reported |
| Tank Status: | Not reported |
| Capacity: | Not reported |
| Active Date: | Not reported |
| Tank Use: | Not reported |
| STG: | Not reported |
| Content: | Not reported |
| Number Of Tanks: | 0 |

CA FID UST:

| | |
|---|---|
| Facility ID: | 19004828 |
| Regulated By: | UTNKA |
| Regulated ID: | Not reported |
| Cortese Code: | Not reported |
| SIC Code: | Not reported |
| Facility Phone: | 2130000000 |
| Mail To: | Not reported |
| Mailing Address: | 5471 W SAN FERNANDO RD |
| Mailing Address 2: | Not reported |
| Mailing City,St,Zip: | LOS ANGELES 900390000 |
| Contact: | Not reported |
| Contact Phone: | Not reported |
| DUNs Number: | Not reported |
| NPDES Number: | Not reported |
| EPA ID: | Not reported |
| Comments: | Not reported |
| Status: | Active |

WIP:

| | |
|---|---|
| Region: | 4 |
| File Number: | 113.5463 |
| **File Status:** | **Historical** |
| Staff: | KLEE |
| Facility Suite: | Not reported |

**M92**
**SE**
**1/8-1/4**
**0.181 mi.**
**957 ft.**

**SEAVAN TRUCK LINES**
**5470 W SAN FERNANDO RD**
**LOS ANGELES, CA 90039**

**WIP** **S106769828**
**N/A**

**Site 12 of 15 in cluster M**

**Relative:**
**Lower**

**Actual:**
**465 ft.**

WIP:
Region: 4
File Number: 113.5421
**File Status:** **Historical**
Staff: MH
Facility Suite: Not reported

---

**M93**
**SSE**
**1/8-1/4**
**0.184 mi.**
**973 ft.**

**RIO COFFEE**
**5469 W SAN FERNANDO RD**
**LOS ANGELES, CA 90039**

**WIP** **S106769837**
**N/A**

**Site 13 of 15 in cluster M**

**Relative:**
**Lower**

**Actual:**
**464 ft.**

WIP:
Region: 4
File Number: 113.5462
**File Status:** **Historical**
Staff: MH
Facility Suite: 113

---

**I94**
**NNW**
**1/8-1/4**
**0.185 mi.**
**978 ft.**

**LASER MARK-IT**
**945 AIRWAY**
**GLENDALE, CA 91201**

**WIP** **S106767667**
**N/A**

**Site 12 of 12 in cluster I**

**Relative:**
**Lower**

**Actual:**
**467 ft.**

WIP:
Region: 4
File Number: 109.0731
**File Status:** **Historical**
Staff: MH
Facility Suite: Not reported

---

**M95**
**SSE**
**1/8-1/4**
**0.188 mi.**
**990 ft.**

**UNK**
**5467 W SAN FERNANDO RD**
**LOS ANGELES, CA 90065**

**SWEEPS UST** **S101586974**
**CA FID UST** **N/A**
**WDS**

**Site 14 of 15 in cluster M**

**Relative:**
**Lower**

**Actual:**
**465 ft.**

SWEEPS UST:
Status: Not reported
Comp Number: 7842
Number: Not reported
Board Of Equalization: Not reported
Referral Date: Not reported
Action Date: Not reported
Created Date: Not reported
Owner Tank Id: Not reported
SWRCB Tank Id: Not reported
Tank Status: Not reported
Capacity: Not reported

**UNK (Continued)** **S101586974**

Active Date: Not reported
Tank Use: Not reported
STG: Not reported
Content: Not reported
Number Of Tanks: 0

CA FID UST:
Facility ID: 19054667
Regulated By: UTNKI
Regulated ID: Not reported
Cortese Code: Not reported
SIC Code: Not reported
Facility Phone: 2130000000
Mail To: Not reported
Mailing Address: UNK
Mailing Address 2: Not reported
Mailing City,St,Zip: LOS ANGELES 900650000
Contact: Not reported
Contact Phone: Not reported
DUNs Number: Not reported
NPDES Number: Not reported
EPA ID: Not reported
Comments: Not reported
Status: Inactive

WDS:
Facility ID: 4 19I004189
Facility Type: Industrial - Facility that treats and/or disposes of liquid or semisolid wastes from any servicing, producing, manufacturing or processing operation of whatever nature, including mining, gravel washing, geothermal operations, air conditioning, ship building and repairing, oil production, storage and disposal operations, water pumping.
Facility Status: Active - Any facility with a continuous or seasonal discharge that is under Waste Discharge Requirements.
NPDES Number: CAS000001 The 1st 2 characters designate the state. The remaining 7 are assigned by the Regional Board
Subregion: 4
Facility Telephone: 3232455365
Facility Contact: MICHEAL JAE
Agency Name: JAE OF CA INC
Agency Address: 5467 W San Fernando Rd
Agency City,St,Zip: Los Angeles 900391014
Agency Contact: MICHEAL JAY
Agency Telephone: 3232455365
Agency Type: Private
SIC Code: 0
SIC Code 2: Not reported
Primary Waste Type: Not reported
Primary Waste: Not reported
Waste Type2: Not reported
Waste2: Not reported
Primary Waste Type: Not reported
Secondary Waste: Not reported
Secondary Waste Type: Not reported
Design Flow: 0

**UNK (Continued)** **S101586974**

Baseline Flow: 0
Reclamation: Not reported
POTW: Not reported
Treat To Water: Minor Threat to Water Quality. A violation of a regional board order should cause a relatively minor impairment of beneficial uses compared to a major or minor threat. Not: All nurds without a TTWQ will be considered a minor threat to water quality unless coded at a higher Level. A Zero (0) may be used to code those NURDS that are found to represent no threat to water quality.
Complexity: Category C - Facilities having no waste treatment systems, such as cooling water dischargers or thosewho must comply through best management practices, facilities with passive waste treatment and disposal systems, such as septic systems with subsurface disposal, or dischargers having waste storage systems with land disposal such as dairy waste ponds.

---

**96**
**East**
**1/8-1/4**
**0.188 mi.**
**992 ft.**

**SOUTHERN CALIFORNIA GAS COMPANY**
**805 FAIRMONT AVE**
**GLENDALE, CA 91203**

**RCRA-SQG** **1012210486**
**CAR000204875**

**Relative:**
**Higher**

**Actual:**
**475 ft.**

RCRA-SQG:
Date form received by agency: 02/01/2010
Facility name: SOUTHERN CALIFORNIA GAS COMPANY
Facility address: 805 FAIRMONT AVE
GLENDALE, CA 912031009
EPA ID: CAR000204875
Mailing address: 6875 CONSOLIDATED WAY
SAN DIEGO, CA 921212602
Contact: JAMES T SCRUGGS
Contact address: 6875 CONSOLIDATED WAY
SAN DIEGO, CA 921212602
Contact country: US
Contact telephone: 858-653-3104
Contact email: JSCRUGGS@SEMPRAUTILITIES.COM
EPA Region: 09
Classification: Small Small Quantity Generator
Description: Handler: generates more than 100 and less than 1000 kg of hazardous waste during any calendar month and accumulates less than 6000 kg of hazardous waste at any time; or generates 100 kg or less of hazardous waste during any calendar month, and accumulates more than 1000 kg of hazardous waste at any time

Owner/Operator Summary:
Owner/operator name: CITY OF GLENDALE
Owner/operator address: 613 E BROADWAY
GLENDALE, CA 91206
Owner/operator country: US
Owner/operator telephone: 818-548-2090
Legal status: Municipal
Owner/Operator Type: Owner
Owner/Op start date: 12/05/2002
Owner/Op end date: Not reported

Owner/operator name: SOUTHERN CALIFORNIA GAS COMPANY
Owner/operator address: Not reported

**SOUTHERN CALIFORNIA GAS COMPANY (Continued)** **1012210486**

| | |
|---|---|
| | Not reported |
| Owner/operator country: | Not reported |
| Owner/operator telephone: | Not reported |
| Legal status: | Private |
| Owner/Operator Type: | Operator |
| Owner/Op start date: | 01/01/1957 |
| Owner/Op end date: | Not reported |

Handler Activities Summary:

| | |
|---|---|
| U.S. importer of hazardous waste: | No |
| Mixed waste (haz. and radioactive): | No |
| Recycler of hazardous waste: | No |
| Transporter of hazardous waste: | No |
| Treater, storer or disposer of HW: | No |
| Underground injection activity: | No |
| On-site burner exemption: | No |
| Furnace exemption: | No |
| Used oil fuel burner: | No |
| Used oil processor: | No |
| User oil refiner: | No |
| Used oil fuel marketer to burner: | No |
| Used oil Specification marketer: | No |
| Used oil transfer facility: | No |
| Used oil transporter: | No |

. Waste code: D001
. Waste name: IGNITABLE WASTE

. Waste code: D004
. Waste name: ARSENIC

. Waste code: D005
. Waste name: BARIUM

. Waste code: D007
. Waste name: CHROMIUM

. Waste code: D008
. Waste name: LEAD

. Waste code: D018
. Waste name: BENZENE

Violation Status: No violations found

---

**N97** **ECONOMY PACKAGING** **HIST UST** **U001566840**
**WNW** **907 FLOWER ST** **N/A**
**1/8-1/4** **GLENDALE, CA 91201**
**0.190 mi.**
**1005 ft.** **Site 1 of 4 in cluster N**

**Relative:**
**Lower**

**Actual:**
**456 ft.**

HIST UST:

| | |
|---|---|
| File Number: | 00028D61 |
| URL: | http://geotracker.waterboards.ca.gov/ustpdfs/pdf/00028D61.pdf |
| Region: | STATE |
| Facility ID: | 00000001825 |
| Facility Type: | Other |
| Other Type: | MANUFACTURING |

**ECONOMY PACKAGING (Continued)** **U001566840**

| | |
|---|---|
| Contact Name: | JOHN MIZIALKO |
| Telephone: | 2132461031 |
| Owner Name: | ECONOMY PACKAGING |
| Owner Address: | 907 FLOWER ST |
| Owner City,St,Zip: | GLENDALE, CA 91201 |
| Total Tanks: | 0001 |

| | |
|---|---|
| Tank Num: | 001 |
| Container Num: | 001 |
| Year Installed: | 1980 |
| Tank Capacity: | 00012000 |
| Tank Used for: | PRODUCT |
| Type of Fuel: | Not reported |
| Container Construction Thickness: | 1/4 |
| Leak Detection: | Visual, Stock Inventor, Pressure Test |

| | |
|---|---|
| Tank Num: | 001 |
| Container Num: | 001 |
| Year Installed: | 1980 |
| Tank Capacity: | 00012000 |
| Tank Used for: | PRODUCT |
| Type of Fuel: | Not reported |
| Container Construction Thickness: | 1/4 |
| Leak Detection: | Visual, Stock Inventor, Pressure Test |

| | |
|---|---|
| Tank Num: | 001 |
| Container Num: | 001 |
| Year Installed: | 1980 |
| Tank Capacity: | 00012000 |
| Tank Used for: | PRODUCT |
| Type of Fuel: | Not reported |
| Container Construction Thickness: | 1/4 |
| Leak Detection: | Visual, Stock Inventor, Pressure Test |

| | |
|---|---|
| Tank Num: | 001 |
| Container Num: | 1 |
| Year Installed: | 1980 |
| Tank Capacity: | 00012000 |
| Tank Used for: | PRODUCT |
| Type of Fuel: | Not reported |
| Container Construction Thickness: | 1/4 |
| Leak Detection: | Pressure Test |

| | |
|---|---|
| Tank Num: | 001 |
| Container Num: | 1 |
| Year Installed: | 1980 |
| Tank Capacity: | 00012000 |
| Tank Used for: | PRODUCT |
| Type of Fuel: | Not reported |
| Container Construction Thickness: | 1/4 |
| Leak Detection: | Pressure Test |

| | |
|---|---|
| Tank Num: | 001 |
| Container Num: | 001 |
| Year Installed: | 1980 |
| Tank Capacity: | 00012000 |
| Tank Used for: | PRODUCT |

**ECONOMY PACKAGING (Continued)** **U001566840**

Type of Fuel: Not reported
Container Construction Thickness: 1/4
Leak Detection: Visual, Stock Inventor, Pressure Test

Tank Num: 001
Container Num: 1
Year Installed: 1980
Tank Capacity: 00012000
Tank Used for: PRODUCT
Type of Fuel: Not reported
Container Construction Thickness: 1/4
Leak Detection: Pressure Test

Tank Num: 001
Container Num: 1
Year Installed: 1980
Tank Capacity: 00012000
Tank Used for: PRODUCT
Type of Fuel: Not reported
Container Construction Thickness: 1/4
Leak Detection: Pressure Test

Tank Num: 002
Container Num: 1
Year Installed: 1980
Tank Capacity: 00012000
Tank Used for: PRODUCT
Type of Fuel: Not reported
Container Construction Thickness: /4 2
Leak Detection: None

Tank Num: 002
Container Num: 1
Year Installed: 1980
Tank Capacity: 00012000
Tank Used for: PRODUCT
Type of Fuel: Not reported
Container Construction Thickness: /4 2
Leak Detection: None

Tank Num: 002
Container Num: 1
Year Installed: 1980
Tank Capacity: 00012000
Tank Used for: PRODUCT
Type of Fuel: Not reported
Container Construction Thickness: /4 2
Leak Detection: None

Tank Num: 002
Container Num: 1
Year Installed: 1980
Tank Capacity: 00012000
Tank Used for: PRODUCT
Type of Fuel: Not reported
Container Construction Thickness: /4 2
Leak Detection: None

**ECONOMY PACKAGING (Continued)** **U001566840**

Click here for Geo Tracker PDF:

---

**N98** **TONYS EXPRESS INC** **HIST UST** **U001566863**
**WNW** **907 FLOWER ST** **N/A**
**1/8-1/4** **GLENDALE, CA 91201**
**0.190 mi.**
**1005 ft.** **Site 2 of 4 in cluster N**

**Relative:**
**Lower**

**Actual:**
**456 ft.**

HIST UST:

| | |
|---|---|
| File Number: | 00028D60 |
| URL: | http://geotracker.waterboards.ca.gov/ustpdfs/pdf/00028D60.pdf |
| Region: | STATE |
| Facility ID: | 00000003674 |
| Facility Type: | Other |
| Other Type: | TRUCKING |
| Contact Name: | TONY RALUY |
| Telephone: | 2132451282 |
| Owner Name: | TONY'S EXPRESS INC. |
| Owner Address: | 907 FLOWER ST. |
| Owner City,St,Zip: | GLENDALE, CA 91201 |
| Total Tanks: | 0002 |
| | |
| Tank Num: | 001 |
| Container Num: | 1 |
| Year Installed: | Not reported |
| Tank Capacity: | 00005000 |
| Tank Used for: | PRODUCT |
| Type of Fuel: | DIESEL |
| Container Construction Thickness: | Not reported |
| Leak Detection: | Stock Inventor |
| | |
| Tank Num: | 002 |
| Container Num: | 2 |
| Year Installed: | Not reported |
| Tank Capacity: | 00008000 |
| Tank Used for: | PRODUCT |
| Type of Fuel: | DIESEL |
| Container Construction Thickness: | Not reported |
| Leak Detection: | Stock Inventor |

Click here for Geo Tracker PDF:

---

**J99** **UNITED BODY SHOP** **EMI** **S100876764**
**NNW** **5938 SAN FERNANDO RD** **WIP** **N/A**
**1/8-1/4** **GLENDALE, CA 91202**
**0.192 mi.**
**1014 ft.** **Site 5 of 5 in cluster J**

**Relative:**
**Higher**

**Actual:**
**469 ft.**

EMI:

| | |
|---|---|
| Year: | 1987 |
| County Code: | 19 |
| Air Basin: | SC |
| Facility ID: | 6781 |
| Air District Name: | SC |
| SIC Code: | 7538 |
| Air District Name: | SOUTH COAST AQMD |

**UNITED BODY SHOP (Continued)** **S100876764**

| | |
|---|---|
| Community Health Air Pollution Info System: | Not reported |
| Consolidated Emission Reporting Rule: | Not reported |
| Total Organic Hydrocarbon Gases Tons/Yr: | 1 |
| Reactive Organic Gases Tons/Yr: | 0 |
| Carbon Monoxide Emissions Tons/Yr: | 0 |
| NOX - Oxides of Nitrogen Tons/Yr: | 0 |
| SOX - Oxides of Sulphur Tons/Yr: | 0 |
| Particulate Matter Tons/Yr: | 0 |
| Part. Matter 10 Micrometers and Smllr Tons/Yr: | 0 |

| | |
|---|---|
| Year: | 1990 |
| County Code: | 19 |
| Air Basin: | SC |
| Facility ID: | 6781 |
| Air District Name: | SC |
| SIC Code: | 7538 |
| Air District Name: | SOUTH COAST AQMD |
| Community Health Air Pollution Info System: | Not reported |
| Consolidated Emission Reporting Rule: | Not reported |
| Total Organic Hydrocarbon Gases Tons/Yr: | 1 |
| Reactive Organic Gases Tons/Yr: | 0 |
| Carbon Monoxide Emissions Tons/Yr: | 0 |
| NOX - Oxides of Nitrogen Tons/Yr: | 0 |
| SOX - Oxides of Sulphur Tons/Yr: | 0 |
| Particulate Matter Tons/Yr: | 0 |
| Part. Matter 10 Micrometers and Smllr Tons/Yr: | 0 |

WIP:

| | |
|---|---|
| Region: | 4 |
| File Number: | 109.0027 |
| **File Status:** | **Historical** |
| Staff: | MH |
| Facility Suite: | Not reported |

---

**O100** **DIGITAL PRESS** **WIP** **S106767668**
**NW** **951 AIR WAY** **N/A**
**1/8-1/4** **GLENDALE, CA 91201**
**0.193 mi.**
**1018 ft.** **Site 1 of 2 in cluster O**

**Relative:**
**Lower**

**Actual:**
**467 ft.**

WIP:

| | |
|---|---|
| Region: | 4 |
| File Number: | 109.0732 |
| **File Status:** | **Historical** |
| Staff: | AVELOZ |
| Facility Suite: | Not reported |

**K101**
**SE**
**1/8-1/4**
**0.194 mi.**
**1026 ft.**

**GENERAL AIRCRAFT CO.**
**5514 SAN FERNANDO RD**
**GLENDALE, CA 91203**

**WIP** **S106769813**
**N/A**

**Site 6 of 6 in cluster K**

**Relative:**
**Higher**

**Actual:**
**472 ft.**

WIP:

| | |
|---|---|
| Region: | 4 |
| File Number: | 113.5382 |
| **File Status:** | **Historical** |
| Staff: | MH |
| Facility Suite: | Not reported |

---

**P102**
**SSE**
**1/8-1/4**
**0.204 mi.**
**1079 ft.**

**SUNLAND, INC./MACDERMID, INC.**
**5439 SAN FERNANDO ROAD WEST**
**LOS ANGELES, CA 90039**

**SEMS-ARCHIVE**
**CORRACTS**
**RCRA-SQG**
**ENVIROSTOR**
**HIST UST**
**HAZNET**
**HWP**

**1000188221**
**CAD010707222**

**Site 1 of 2 in cluster P**

**Relative:**
**Lower**

**Actual:**
**461 ft.**

SEMS-ARCHIVE:

| | |
|---|---|
| Site ID: | 900319 |
| EPA ID: | CAD010707222 |
| Federal Facility: | N |
| NPL: | Not on the NPL |
| Non NPL Status: | NFRAP-Site does not qualify for the NPL based on existing information |

**Following information was gathered from the prior CERCLIS update completed in 10/2013:**

| | |
|---|---|
| Site ID: | 0900319 |
| Federal Facility: | Not a Federal Facility |
| NPL Status: | Not on the NPL |
| Non NPL Status: | NFRAP-Site does not qualify for the NPL based on existing information |

CERCLIS-NFRAP Site Contact Details:

| | |
|---|---|
| Contact Sequence ID: | 13287167.00000 |
| Person ID: | 13003854.00000 |
| Contact Sequence ID: | 13292762.00000 |
| Person ID: | 13003858.00000 |
| Contact Sequence ID: | 13298620.00000 |
| Person ID: | 13004003.00000 |

CERCLIS-NFRAP Assessment History:

| | |
|---|---|
| Action: | PRELIMINARY ASSESSMENT |
| Date Started: | / / |
| Date Completed: | 02/06/91 |
| Priority Level: | NFRAP-Site does not qualify for the NPL based on existing information |
| Action: | ARCHIVE SITE |
| Date Started: | / / |
| Date Completed: | 02/06/91 |
| Priority Level: | Not reported |
| Action: | DISCOVERY |
| Date Started: | / / |
| Date Completed: | 08/24/90 |
| Priority Level: | Not reported |

**SUNLAND, INC./MACDERMID, INC. (Continued)** **1000188221**

CORRACTS:

| | |
|---|---|
| EPA ID: | CAD010707222 |
| EPA Region: | 09 |
| Area Name: | ENTIRE FACILITY |
| Actual Date: | 19910206 |
| Action: | CA075LO - CA Prioritization, Facility or area was assigned a low corrective action priority |
| NAICS Code(s): | 325998<br>All Other Miscellaneous Chemical Product and Preparation Manufacturing |
| Original schedule date: | Not reported |
| Schedule end date: | Not reported |

RCRA-SQG:

| | |
|---|---|
| Date form received by agency: | 02/27/2004 |
| Facility name: | SUNLAND, INC./MACDERMID, INC. |
| Facility address: | 5439 SAN FERNANDO ROAD WEST<br>LOS ANGELES, CA 90039 |
| EPA ID: | CAD010707222 |
| Mailing address: | 245 FREIGHT ST.<br>WATERBURY, CT 06702 |
| Contact: | RICHARD A NAVE |
| Contact address: | Not reported<br>Not reported |
| Contact country: | US |
| Contact telephone: | (203) 575-5747 |
| Contact email: | RNAVE@MACDERMID.COM |
| EPA Region: | 09 |
| Land type: | Private |
| Classification: | Small Small Quantity Generator |
| Description: | Handler: generates more than 100 and less than 1000 kg of hazardous waste during any calendar month and accumulates less than 6000 kg of hazardous waste at any time; or generates 100 kg or less of hazardous waste during any calendar month, and accumulates more than 1000 kg of hazardous waste at any time |

Owner/Operator Summary:

| | |
|---|---|
| Owner/operator name: | MACDERMID, INC. |
| Owner/operator address: | Not reported<br>Not reported |
| Owner/operator country: | US |
| Owner/operator telephone: | Not reported |
| Legal status: | Private |
| Owner/Operator Type: | Operator |
| Owner/Op start date: | 02/01/1962 |
| Owner/Op end date: | Not reported |

| | |
|---|---|
| Owner/operator name: | MAC DERMID INCORPORATED |
| Owner/operator address: | 5439 SAN FERNANDO RD WEST<br>CITY NOT REPORTED, CA 99999 |
| Owner/operator country: | Not reported |
| Owner/operator telephone: | (213) 240-9575 |
| Legal status: | Private |
| Owner/Operator Type: | Operator |
| Owner/Op start date: | Not reported |

**SUNLAND, INC./MACDERMID, INC. (Continued)** **1000188221**

Owner/Op end date: Not reported

Owner/operator name: MACDERMID, INC.
Owner/operator address: 245 FREIGHT ST.
WATERBURY, CT 06702
Owner/operator country: US
Owner/operator telephone: Not reported
Legal status: Private
Owner/Operator Type: Owner
Owner/Op start date: 02/01/1962
Owner/Op end date: Not reported

Owner/operator name: MAC DERMID INCORPORATED
Owner/operator address: 245 FREIGHT ST
WATERBURY, CT 06702
Owner/operator country: Not reported
Owner/operator telephone: (203) 575-5700
Legal status: Private
Owner/Operator Type: Owner
Owner/Op start date: Not reported
Owner/Op end date: Not reported

Handler Activities Summary:
U.S. importer of hazardous waste: No
Mixed waste (haz. and radioactive): No
Recycler of hazardous waste: No
Transporter of hazardous waste: No
Treater, storer or disposer of HW: No
Underground injection activity: No
On-site burner exemption: No
Furnace exemption: No
Used oil fuel burner: No
Used oil processor: No
User oil refiner: No
Used oil fuel marketer to burner: No
Used oil Specification marketer: No
Used oil transfer facility: No
Used oil transporter: No

Historical Generators:
Date form received by agency: 02/27/2004
Site name: SUNLAND, INC./MACDERMID, INC.
Classification: Large Quantity Generator

. Waste code: D001
. Waste name: IGNITABLE WASTE

. Waste code: D002
. Waste name: CORROSIVE WASTE

. Waste code: D007
. Waste name: CHROMIUM

. Waste code: D011
. Waste name: SILVER

**SUNLAND, INC./MACDERMID, INC. (Continued)** **1000188221**

Date form received by agency: 10/12/2000
Site name: MACDERMID, INC.
Classification: Large Quantity Generator

Date form received by agency: 10/15/1998
Site name: MAC DERMID INC
Classification: Not a generator, verified

Date form received by agency: 01/22/1992
Site name: MACDERMID INC.
Classification: Large Quantity Generator

Corrective Action Summary:
Event date: 02/06/1991
Event: CA029EP

Event date: 02/06/1991
Event: CA Prioritization, Facility or area was assigned a low corrective action priority.

Event date: 02/06/1991
Event: CA074LO

Event date: 02/06/1991
Event: CA049PA

Facility Has Received Notices of Violations:
Regulation violated: Not reported
Area of violation: TSD - Financial Requirements
Date violation determined: 11/15/1988
Date achieved compliance: 12/13/1988
Violation lead agency: State
Enforcement action: WRITTEN INFORMAL
Enforcement action date: 11/18/1988
Enf. disposition status: Not reported
Enf. disp. status date: Not reported
Enforcement lead agency: State
Proposed penalty amount: Not reported
Final penalty amount: Not reported
Paid penalty amount: Not reported

Regulation violated: Not reported
Area of violation: TSD - General
Date violation determined: 11/14/1988
Date achieved compliance: 02/22/1989
Violation lead agency: State
Enforcement action: WRITTEN INFORMAL
Enforcement action date: 12/28/1988
Enf. disposition status: Not reported
Enf. disp. status date: Not reported
Enforcement lead agency: State
Proposed penalty amount: Not reported
Final penalty amount: Not reported
Paid penalty amount: Not reported

Regulation violated: Not reported

**SUNLAND, INC./MACDERMID, INC. (Continued)** **1000188221**

Area of violation: TSD - General
Date violation determined: 06/11/1987
Date achieved compliance: 06/22/1987
Violation lead agency: State
Enforcement action: WRITTEN INFORMAL
Enforcement action date: 06/11/1987
Enf. disposition status: Not reported
Enf. disp. status date: Not reported
Enforcement lead agency: State
Proposed penalty amount: Not reported
Final penalty amount: Not reported
Paid penalty amount: Not reported

Regulation violated: Not reported
Area of violation: TSD - General
Date violation determined: 06/11/1987
Date achieved compliance: 06/22/1987
Violation lead agency: State
Enforcement action: WRITTEN INFORMAL
Enforcement action date: 12/28/1988
Enf. disposition status: Not reported
Enf. disp. status date: Not reported
Enforcement lead agency: State
Proposed penalty amount: Not reported
Final penalty amount: Not reported
Paid penalty amount: Not reported

Evaluation Action Summary:
Evaluation date: 11/15/1988
Evaluation: FINANCIAL RECORD REVIEW
Area of violation: TSD - Financial Requirements
Date achieved compliance: 12/13/1988
Evaluation lead agency: State

Evaluation date: 11/14/1988
Evaluation: COMPLIANCE EVALUATION INSPECTION ON-SITE
Area of violation: TSD - General
Date achieved compliance: 02/22/1989
Evaluation lead agency: State

Evaluation date: 06/11/1987
Evaluation: COMPLIANCE EVALUATION INSPECTION ON-SITE
Area of violation: TSD - General
Date achieved compliance: 06/22/1987
Evaluation lead agency: State

ENVIROSTOR:
Facility ID: 80001650
Status: * Inactive
Status Date: 01/01/2008
Site Code: Not reported
Site Type: Corrective Action
Site Type Detailed: Corrective Action
Acres: 0
NPL: NO
Regulatory Agencies: NONE SPECIFIED
Lead Agency: NONE SPECIFIED

**SUNLAND, INC./MACDERMID, INC. (Continued)** **1000188221**

Program Manager: Not reported
Supervisor: * Unknown
Division Branch: Cleanup Chatsworth
Assembly: 43
Senate: 25
Special Program: Not reported
Restricted Use: NO
Site Mgmt Req: NONE SPECIFIED
Funding: Not reported
Latitude: 34.15192
Longitude: -118.2758
APN: 5593005038
Past Use: NONE SPECIFIED
Potential COC: NONE SPECIFIED
Confirmed COC: NONE SPECIFIED
Potential Description: NONE SPECIFIED
Alias Name: Sunland Chemical
Alias Type: Alternate Name
Alias Name: 5593005038
Alias Type: APN
Alias Name: CAD010707222
Alias Type: EPA Identification Number
Alias Name: 60002197
Alias Type: Envirostor ID Number
Alias Name: 60002197
Alias Type: Envirostor ID Number
Alias Name: 80001650
Alias Type: Envirostor ID Number

Completed Info:
Completed Area Name: PROJECT WIDE
Completed Sub Area Name: Not reported
Completed Document Type: Preliminary Assessment Report
Completed Date: 02/06/1991
Comments: Not reported

Future Area Name: Not reported
Future Sub Area Name: Not reported
Future Document Type: Not reported
Future Due Date: Not reported
Schedule Area Name: Not reported
Schedule Sub Area Name: Not reported
Schedule Document Type: Not reported
Schedule Due Date: Not reported
Schedule Revised Date: Not reported

HIST UST:
File Number: 000282AF
URL: http://geotracker.waterboards.ca.gov/ustpdfs/pdf/000282AF.pdf
Region: Not reported
Facility ID: Not reported
Facility Type: Not reported
Other Type: Not reported
Contact Name: Not reported
Telephone: Not reported
Owner Name: Not reported
Owner Address: Not reported

**SUNLAND, INC./MACDERMID, INC. (Continued)** **1000188221**

| | |
|---|---|
| Owner City,St,Zip: | Not reported |
| Total Tanks: | Not reported |
| | |
| Tank Num: | Not reported |
| Container Num: | Not reported |
| Year Installed: | Not reported |
| Tank Capacity: | Not reported |
| Tank Used for: | Not reported |
| Type of Fuel: | Not reported |
| Container Construction Thickness: | Not reported |
| Leak Detection: | Not reported |

Click here for Geo Tracker PDF:

HAZNET:

| | |
|---|---|
| envid: | 1000188221 |
| Year: | 2004 |
| GEPAID: | CAD010707222 |
| Contact: | THOMAS A DEAN |
| Telephone: | 2132409575 |
| Mailing Name: | Not reported |
| Mailing Address: | 3621 W MACARTHUR BLVD SUITE 114 |
| Mailing City,St,Zip: | SANTA ANA, CA 927041014 |
| Gen County: | Not reported |
| TSD EPA ID: | AZD081705402 |
| TSD County: | Not reported |
| Waste Category: | Off-specification, aged or surplus inorganics |
| Disposal Method: | Treatment, Tank |
| Tons: | Not reported |
| Cat Decode: | Off-specification, aged or surplus inorganics |
| Method Decode: | Treatment, Tank |
| Facility County: | Los Angeles |
| | |
| envid: | 1000188221 |
| Year: | 2004 |
| GEPAID: | CAD010707222 |
| Contact: | THOMAS A DEAN |
| Telephone: | 2132409575 |
| Mailing Name: | Not reported |
| Mailing Address: | 3621 W MACARTHUR BLVD SUITE 114 |
| Mailing City,St,Zip: | SANTA ANA, CA 927041014 |
| Gen County: | Not reported |
| TSD EPA ID: | AZD081705402 |
| TSD County: | Not reported |
| Waste Category: | Not reported |
| Disposal Method: | Disposal, Land Fill |
| Tons: | Not reported |
| Cat Decode: | Not reported |
| Method Decode: | Disposal, Land Fill |
| Facility County: | Los Angeles |
| | |
| envid: | 1000188221 |
| Year: | 2004 |
| GEPAID: | CAD010707222 |
| Contact: | THOMAS A DEAN |
| Telephone: | 2132409575 |
| Mailing Name: | Not reported |

**SUNLAND, INC./MACDERMID, INC. (Continued)** **1000188221**

| | |
|---|---|
| Mailing Address: | 3621 W MACARTHUR BLVD SUITE 114 |
| Mailing City,St,Zip: | SANTA ANA, CA 927041014 |
| Gen County: | Not reported |
| TSD EPA ID: | AZD081705402 |
| TSD County: | Not reported |
| Waste Category: | Off-specification, aged or surplus inorganics |
| Disposal Method: | Recycler |
| Tons: | 0.02 |
| Cat Decode: | Off-specification, aged or surplus inorganics |
| Method Decode: | Recycler |
| Facility County: | Los Angeles |

| | |
|---|---|
| envid: | 1000188221 |
| Year: | 2004 |
| GEPAID: | CAD010707222 |
| Contact: | THOMAS A DEAN |
| Telephone: | 2132409575 |
| Mailing Name: | Not reported |
| Mailing Address: | 3621 W MACARTHUR BLVD SUITE 114 |
| Mailing City,St,Zip: | SANTA ANA, CA 927041014 |
| Gen County: | Not reported |
| TSD EPA ID: | AZD081705402 |
| TSD County: | Not reported |
| Waste Category: | Off-specification, aged or surplus organics |
| Disposal Method: | Recycler |
| Tons: | 0.52 |
| Cat Decode: | Off-specification, aged or surplus organics |
| Method Decode: | Recycler |
| Facility County: | Los Angeles |

| | |
|---|---|
| envid: | 1000188221 |
| Year: | 2004 |
| GEPAID: | CAD010707222 |
| Contact: | THOMAS A DEAN |
| Telephone: | 2132409575 |
| Mailing Name: | Not reported |
| Mailing Address: | 3621 W MACARTHUR BLVD SUITE 114 |
| Mailing City,St,Zip: | SANTA ANA, CA 927041014 |
| Gen County: | Not reported |
| TSD EPA ID: | AZD081705402 |
| TSD County: | Not reported |
| Waste Category: | Off-specification, aged or surplus organics |
| Disposal Method: | Disposal, Land Fill |
| Tons: | Not reported |
| Cat Decode: | Off-specification, aged or surplus organics |
| Method Decode: | Disposal, Land Fill |
| Facility County: | Los Angeles |

Click this hyperlink while viewing on your computer to access
93 additional CA_HAZNET: record(s) in the EDR Site Report.

HWP:

| | |
|---|---|
| EPA Id: | CAD010707222 |
| Cleanup Status: | KNOWN GENERATORS |
| Latitude: | 34.15148 |
| Longitude: | -118.2750 |
| Facility Type: | Historical - Non-Operating |

**SUNLAND, INC./MACDERMID, INC. (Continued)** **1000188221**

| | |
|---|---|
| Facility Size: | Not reported |
| Team: | Not reported |
| Supervisor: | Not reported |
| Site Code: | Not reported |
| Assembly District: | 43 |
| Senate District: | 25 |
| Public Information Officer: | Not reported |
| Public Information Officer: | Not reported |

---

**P103**
**SSE**
**1/8-1/4**
**0.204 mi.**
**1079 ft.**

**MACDERMID, INC.**
**5439 SAN FERNANDO RD**
**GLENDALE, CA 91203**

**WIP** **S106769835**
**N/A**

**Site 2 of 2 in cluster P**

**Relative:**
**Lower**

**Actual:**
**461 ft.**

WIP:

| | |
|---|---|
| Region: | 4 |
| File Number: | 113.5459 |
| **File Status:** | **Historical** |
| Staff: | WDK |
| Facility Suite: | Not reported |

---

**Q104**
**SE**
**1/8-1/4**
**0.210 mi.**
**1108 ft.**

**R. A. FISCHER**
**517 COMMERCIAL ST**
**GLENDALE, CA 91203**

**WIP** **S106767479**
**N/A**

**Site 1 of 8 in cluster Q**

**Relative:**
**Higher**

**Actual:**
**475 ft.**

WIP:

| | |
|---|---|
| Region: | 4 |
| File Number: | 109.0288 |
| **File Status:** | **Historical** |
| Staff: | UNIDENTIFIED |
| Facility Suite: | Not reported |

---

**Q105**
**SE**
**1/8-1/4**
**0.213 mi.**
**1123 ft.**

**DAYHAN ELECTRONICS**
**5524 W SAN FERNANDO RD**
**GLENDALE, CA 91203**

**WIP** **S106769404**
**N/A**

**Site 2 of 8 in cluster Q**

**Relative:**
**Higher**

**Actual:**
**472 ft.**

WIP:

| | |
|---|---|
| Region: | 4 |
| File Number: | 113.0325 |
| **File Status:** | **Historical** |
| Staff: | AVELOZ |
| Facility Suite: | Not reported |

**R106**
**NNW**
**1/8-1/4**
**0.215 mi.**
**1133 ft.**

**GREY-HOUND BUS**
**6000 SAN FERNANDO RD**
**GLENDALE, CA 91202**

**WIP** **S106767400**
**N/A**

**Site 1 of 9 in cluster R**

**Relative:**
**Higher**

**Actual:**
**469 ft.**

WIP:

| | |
|---|---|
| Region: | 4 |
| File Number: | 109.0028 |
| **File Status:** | **Historical** |
| Staff: | TB |
| Facility Suite: | Not reported |

---

**S107**
**NW**
**1/8-1/4**
**0.219 mi.**
**1155 ft.**

**CALTRANS**
**1011 GRAND CENTRAL AVE**
**GLENDALE, CA 91201**

**WIP** **S106767691**
**N/A**

**Site 1 of 5 in cluster S**

**Relative:**
**Lower**

**Actual:**
**465 ft.**

WIP:

| | |
|---|---|
| Region: | 4 |
| File Number: | 109.0764 |
| **File Status:** | **Historical** |
| Staff: | UNIDENTIFIED |
| Facility Suite: | Not reported |

---

**M108**
**SSE**
**1/8-1/4**
**0.220 mi.**
**1159 ft.**

**SUNLAND CHEMICAL**
**5447 WEST SAN FERNANDO ROAD**
**LOS ANGELES, CA 90039**

**ENVIROSTOR** **S118098161**
**VCP** **N/A**

**Site 15 of 15 in cluster M**

**Relative:**
**Lower**

**Actual:**
**466 ft.**

ENVIROSTOR:

| | |
|---|---|
| Facility ID: | 60002197 |
| Status: | Active |
| Status Date: | 06/23/2015 |
| Site Code: | 301709 |
| Site Type: | Voluntary Cleanup |
| Site Type Detailed: | Voluntary Cleanup |
| Acres: | 1.37 |
| NPL: | NO |
| Regulatory Agencies: | SMBRP |
| Lead Agency: | SMBRP |
| Program Manager: | Manjul Bose |
| Supervisor: | Javier Hinojosa |
| Division Branch: | Cleanup Chatsworth |
| Assembly: | , 43 |
| Senate: | , 25 |
| Special Program: | Voluntary Cleanup Program |
| Restricted Use: | NO |
| Site Mgmt Req: | NONE SPECIFIED |
| Funding: | Responsible Party |
| Latitude: | 34.15210 |
| Longitude: | -118.2755 |
| APN: | 5593005037, 5593005038, 5593005042 |
| Past Use: | TRANSFER STATION, LABORATORIES- CHEMICAL, MANUFACTURING - CHEMICALS, RESEARCH - CHEMICAL |
| Potential COC: | Under Investigation Tetrachloroethylene (PCE Trichloroethylene (TCE |

**SUNLAND CHEMICAL (Continued)** **S118098161**

Confirmed COC: Tetrachloroethylene (PCE Trichloroethylene (TCE Under Investigation
Potential Description: OTH, SOIL, SV, UE
Alias Name: 5593005037
Alias Type: APN
Alias Name: 5593005038
Alias Type: APN
Alias Name: 5593005042
Alias Type: APN
Alias Name: 5593-005-037
Alias Type: Former Project ID
Alias Name: 5593-005-038
Alias Type: Former Project ID
Alias Name: 5593-005-042
Alias Type: Former Project ID
Alias Name: 80001650
Alias Type: Former Project ID
Alias Name: N/A
Alias Type: Former Project ID
Alias Name: 301709
Alias Type: Project Code (Site Code)
Alias Name: 60002197
Alias Type: Envirostor ID Number
Alias Name: 80001650
Alias Type: Envirostor ID Number

Completed Info:
Completed Area Name: PROJECT WIDE
Completed Sub Area Name: Not reported
Completed Document Type: Voluntary Cleanup Agreement
Completed Date: 06/29/2015
Comments: Final Signed VCA

Completed Area Name: PROJECT WIDE
Completed Sub Area Name: Not reported
Completed Document Type: Preliminary Endangerment Assessment Report
Completed Date: 11/04/2015
Comments: PEAE Review Letter Sent. Further Action Required at the Site.

Future Area Name: Not reported
Future Sub Area Name: Not reported
Future Document Type: Not reported
Future Due Date: Not reported
Schedule Area Name: Not reported
Schedule Sub Area Name: Not reported
Schedule Document Type: Not reported
Schedule Due Date: Not reported
Schedule Revised Date: Not reported

VCP:
Facility ID: 60002197
Site Type: Voluntary Cleanup
Site Type Detail: Voluntary Cleanup
Site Mgmt. Req.: NONE SPECIFIED
Acres: 1.37
National Priorities List: NO
Cleanup Oversight Agencies: SMBRP
Lead Agency: SMBRP

**SUNLAND CHEMICAL (Continued)** **S118098161**

| | |
|---|---|
| Lead Agency Description: | DTSC - Site Cleanup Program |
| Project Manager: | Manjul Bose |
| Supervisor: | Javier Hinojosa |
| Division Branch: | Cleanup Chatsworth |
| Site Code: | 301709 |
| Assembly: | , 43 |
| Senate: | , 25 |
| Special Programs Code: | Voluntary Cleanup Program |
| Status: | Active |
| Status Date: | 06/23/2015 |
| Restricted Use: | NO |
| Funding: | Responsible Party |
| Lat/Long: | 34.15210 / -118.2755 |
| APN: | 5593005037, 5593005038, 5593005042 |
| Past Use: | TRANSFER STATION, LABORATORIES- CHEMICAL, MANUFACTURING - CHEMICALS, RESEARCH - CHEMICAL |
| Potential COC: | 31001, 30022, 30027 |
| Confirmed COC: | 30022,30027,31001 |
| Potential Description: | OTH, SOIL, SV, UE |
| Alias Name: | 5593005037 |
| Alias Type: | APN |
| Alias Name: | 5593005038 |
| Alias Type: | APN |
| Alias Name: | 5593005042 |
| Alias Type: | APN |
| Alias Name: | 5593-005-037 |
| Alias Type: | Former Project ID |
| Alias Name: | 5593-005-038 |
| Alias Type: | Former Project ID |
| Alias Name: | 5593-005-042 |
| Alias Type: | Former Project ID |
| Alias Name: | 80001650 |
| Alias Type: | Former Project ID |
| Alias Name: | N/A |
| Alias Type: | Former Project ID |
| Alias Name: | 301709 |
| Alias Type: | Project Code (Site Code) |
| Alias Name: | 60002197 |
| Alias Type: | Envirostor ID Number |
| Alias Name: | 80001650 |
| Alias Type: | Envirostor ID Number |

Completed Info:

| | |
|---|---|
| Completed Area Name: | PROJECT WIDE |
| Completed Sub Area Name: | Not reported |
| Completed Document Type: | Voluntary Cleanup Agreement |
| Completed Date: | 06/29/2015 |
| Comments: | Final Signed VCA |
| | |
| Completed Area Name: | PROJECT WIDE |
| Completed Sub Area Name: | Not reported |
| Completed Document Type: | Preliminary Endangerment Assessment Report |
| Completed Date: | 11/04/2015 |
| Comments: | PEAE Review Letter Sent. Further Action Required at the Site. |
| | |
| Future Area Name: | Not reported |
| Future Sub Area Name: | Not reported |
| Future Document Type: | Not reported |

**SUNLAND CHEMICAL (Continued)** **S118098161**

| | |
|---|---|
| Future Due Date: | Not reported |
| Schedule Area Name: | Not reported |
| Schedule Sub Area Name: | Not reported |
| Schedule Document Type: | Not reported |
| Schedule Due Date: | Not reported |
| Schedule Revised Date: | Not reported |

---

**S109** **AGFA CORPORATION** **RCRA NonGen / NLR** **1000142151**
**NW** **1014 GRAND CENTRAL AVE** **FINDS** **CAD981429558**
**1/8-1/4** **GLENDALE, CA 91201** **ECHO**
**0.222 mi.**
**1174 ft.** **Site 2 of 5 in cluster S**

**Relative:**
**Lower**

**Actual:**
**464 ft.**

RCRA NonGen / NLR:

| | |
|---|---|
| Date form received by agency: | 06/13/1986 |
| Facility name: | AGFA CORPORATION |
| Facility address: | 1014 GRAND CENTRAL AVE<br>GLENDALE, CA 91201 |
| EPA ID: | CAD981429558 |
| Mailing address: | GRAND CENTRAL AVE<br>GLENDALE, CA 91201 |
| Contact: | ENVIRONMENTAL MANAGER |
| Contact address: | 1014 GRAND CENTRAL AVE<br>GLENDALE, CA 91201 |
| Contact country: | US |
| Contact telephone: | (213) 345-0267 |
| Contact email: | Not reported |
| EPA Region: | 09 |
| Classification: | Non-Generator |
| Description: | Handler: Non-Generators do not presently generate hazardous waste |

Owner/Operator Summary:

| | |
|---|---|
| Owner/operator name: | AGFA GEVAERT INC |
| Owner/operator address: | NOT REQUIRED<br>NOT REQUIRED, ME 99999 |
| Owner/operator country: | Not reported |
| Owner/operator telephone: | (415) 555-1212 |
| Legal status: | Private |
| Owner/Operator Type: | Owner |
| Owner/Op start date: | Not reported |
| Owner/Op end date: | Not reported |

| | |
|---|---|
| Owner/operator name: | NOT REQUIRED |
| Owner/operator address: | NOT REQUIRED<br>NOT REQUIRED, ME 99999 |
| Owner/operator country: | Not reported |
| Owner/operator telephone: | (415) 555-1212 |
| Legal status: | Private |
| Owner/Operator Type: | Operator |
| Owner/Op start date: | Not reported |
| Owner/Op end date: | Not reported |

Handler Activities Summary:

| | |
|---|---|
| U.S. importer of hazardous waste: | No |
| Mixed waste (haz. and radioactive): | No |
| Recycler of hazardous waste: | No |
| Transporter of hazardous waste: | No |

**AGFA CORPORATION (Continued)** **1000142151**

Treater, storer or disposer of HW: No
Underground injection activity: No
On-site burner exemption: No
Furnace exemption: No
Used oil fuel burner: No
Used oil processor: No
User oil refiner: No
Used oil fuel marketer to burner: No
Used oil Specification marketer: No
Used oil transfer facility: No
Used oil transporter: No

Violation Status: No violations found

FINDS:

Registry ID: 110002702451

Environmental Interest/Information System
RCRAInfo is a national information system that supports the Resource Conservation and Recovery Act (RCRA) program through the tracking of events and activities related to facilities that generate, transport, and treat, store, or dispose of hazardous waste. RCRAInfo allows RCRA program staff to track the notification, permit, compliance, and corrective action activities required under RCRA.

ECHO:
Envid: 1000142151
Registry ID: 110002702451
DFR URL: http://echo.epa.gov/detailed_facility_report?fid=110002702451

---

**S110** **METACOMET INC** **EMI** **S106767685**
**NW** **1014 GRAND CENTRAL AVE** **WIP** **N/A**
**1/8-1/4** **GLENDALE, CA 91201**
**0.222 mi.**
**1174 ft.** **Site 3 of 5 in cluster S**

**Relative:**
**Lower**

**Actual:**
**464 ft.**

EMI:
Year: 1987
County Code: 19
Air Basin: SC
Facility ID: 12631
Air District Name: SC
SIC Code: 2834
Air District Name: SOUTH COAST AQMD
Community Health Air Pollution Info System: Not reported
Consolidated Emission Reporting Rule: Not reported
Total Organic Hydrocarbon Gases Tons/Yr: 0
Reactive Organic Gases Tons/Yr: 0
Carbon Monoxide Emissions Tons/Yr: 0
NOX - Oxides of Nitrogen Tons/Yr: 0
SOX - Oxides of Sulphur Tons/Yr: 0
Particulate Matter Tons/Yr: 6
Part. Matter 10 Micrometers and Smllr Tons/Yr: 5

WIP:

**METACOMET INC (Continued)** **S106767685**

Region: 4
File Number: 109.0753
**File Status: Historical**
Staff: MH
Facility Suite: Not reported

---

**R111**
**NNW**
**1/8-1/4**
**0.225 mi.**
**1190 ft.**

**ONTARIO REFRIGERATION**
**6002 SAN FERNANDO RD**
**GLENDALE, CA 91202**

**WIP** **S104580795**
**N/A**

**Site 2 of 9 in cluster R**

**Relative:**
**Higher**

**Actual:**
**469 ft.**

WIP:
Region: 4
File Number: 109.0029
**File Status: Historical**
Staff: KLEE
Facility Suite: Not reported

---

**T112**
**SE**
**1/8-1/4**
**0.226 mi.**
**1193 ft.**

**COLLISON**
**5500 SAN FERNANDO RD**
**GLENDALE, CA 91203**

**LA Co. Site Mitigation** **S103664639**
**WIP** **N/A**

**Site 1 of 3 in cluster T**

**Relative:**
**Higher**

**Actual:**
**472 ft.**

LA Co. Site Mitigation:
Facility ID: Not reported
Site ID: SD0010452
Jurisdiction: County
Case ID: RO0000282
Abated: Yes
Assigned To: Kim Clark
Entered Date: 05/11/2004
Abated Date: 04/08/1997

WIP:
Region: 4
File Number: 113.5381
**File Status: Historical**
Staff: EN
Facility Suite: Not reported

---

**Q113**
**ESE**
**1/8-1/4**
**0.227 mi.**
**1198 ft.**

**SOUND CONTROL**
**526 COMMERCIAL ST**
**GLENDALE, CA 91203**

**WIP** **S106767478**
**N/A**

**Site 3 of 8 in cluster Q**

**Relative:**
**Higher**

**Actual:**
**478 ft.**

WIP:
Region: 4
File Number: 109.0287
**File Status: Historical**
Staff: UNIDENTIFIED
Facility Suite: Not reported

**O114 NW 1/8-1/4 0.227 mi. 1199 ft.** | **INDO-EUROPEAN FOODS, INC.**
**1000 AIRWAY**
**GLENDALE, CA 91201**

**Site 2 of 2 in cluster O**

**ENF** **S106767662**
**WIP** **N/A**

**Relative: Higher**

**Actual: 468 ft.**

ENF:

| | |
|---|---|
| Region: | 4 |
| Facility Id: | 232375 |
| Agency Name: | Indo-European Foods, Inc. |
| Place Type: | Facility |
| Place Subtype: | Not reported |
| Facility Type: | Not reported |
| Agency Type: | Privately-Owned Business |
| # Of Agencies: | 1 |
| Place Latitude: | Not reported |
| Place Longitude: | Not reported |
| SIC Code 1: | Not reported |
| SIC Desc 1: | Not reported |
| SIC Code 2: | Not reported |
| SIC Desc 2: | Not reported |
| SIC Code 3: | Not reported |
| SIC Desc 3: | Not reported |
| NAICS Code 1: | Not reported |
| NAICS Desc 1: | Not reported |
| NAICS Code 2: | Not reported |
| NAICS Desc 2: | Not reported |
| NAICS Code 3: | Not reported |
| NAICS Desc 3: | Not reported |
| # Of Places: | 1 |
| Source Of Facility: | Reg Meas |
| Design Flow: | Not reported |
| Threat To Water Quality: | Not reported |
| Complexity: | Not reported |
| Pretreatment: | Not reported |
| Facility Waste Type: | Not reported |
| Facility Waste Type 2: | Not reported |
| Facility Waste Type 3: | Not reported |
| Facility Waste Type 4: | Not reported |
| Program: | WIP |
| Program Category1: | MONITORING |
| Program Category2: | MONITORING |
| # Of Programs: | 1 |
| WDID: | 4WIP1090724 |
| Reg Measure Id: | 157023 |
| Reg Measure Type: | Unregulated |
| Region: | 4 |
| Order #: | Not reported |
| Npdes# CA#: | Not reported |
| Major-Minor: | Not reported |
| Npdes Type: | Not reported |
| Reclamation: | Not reported |
| Dredge Fill Fee: | Not reported |
| 301H: | Not reported |
| Application Fee Amt Received: | Not reported |
| Status: | Historical |
| Status Date: | 06/17/2005 |
| Effective Date: | Not reported |
| Expiration/Review Date: | Not reported |

**INDO-EUROPEAN FOODS, INC. (Continued)** **S106767662**

| | |
|---|---|
| Termination Date: | Not reported |
| WDR Review - Amend: | Not reported |
| WDR Review - Revise/Renew: | Not reported |
| WDR Review - Rescind: | Not reported |
| WDR Review - No Action Required: | Not reported |
| WDR Review - Pending: | Not reported |
| WDR Review - Planned: | Not reported |
| Status Enrollee: | N |
| Individual/General: | Not reported |
| Fee Code: | Not reported |
| Direction/Voice: | Passive |
| Enforcement Id(EID): | 220916 |
| Region: | 4 |
| Order / Resolution Number: | LT940120 |
| Enforcement Action Type: | 13267 Letter |
| Effective Date: | 01/20/1994 |
| Adoption/Issuance Date: | Not reported |
| Achieve Date: | Not reported |
| Termination Date: | Not reported |
| ACL Issuance Date: | Not reported |
| EPL Issuance Date: | Not reported |
| Status: | Historical |
| Title: | Enforcement - 4WIP1090724 |
| Description: | Not reported |
| Program: | WIP |
| Latest Milestone Completion Date: | Not reported |
| # Of Programs1: | 1 |
| Total Assessment Amount: | $0.00 |
| Initial Assessed Amount: | $0.00 |
| Liability $ Amount: | $0.00 |
| Project $ Amount: | $0.00 |
| Liability $ Paid: | $0.00 |
| Project $ Completed: | $0.00 |
| Total $ Paid/Completed Amount: | $0.00 |

WIP:

| | |
|---|---|
| Region: | 4 |
| File Number: | 109.0724 |
| **File Status:** | **Historical** |
| Staff: | MH |
| Facility Suite: | Not reported |

---

**Q115** **KENNEDY HYDRAULICS** **SWEEPS UST** **U001566890**
**SE** **521 COMMERCIAL ST** **HIST UST** **N/A**
**1/8-1/4** **GLENDALE, CA 91203** **LOS ANGELES CO. HMS**
**0.228 mi.**
**1205 ft.** **Site 4 of 8 in cluster Q**

**Relative:**
**Higher**

**Actual:**
**477 ft.**

SWEEPS UST:

| | |
|---|---|
| Status: | Active |
| Comp Number: | 12275 |
| Number: | 9 |
| Board Of Equalization: | Not reported |
| Referral Date: | 12-11-90 |
| Action Date: | 12-11-90 |
| Created Date: | 06-30-89 |
| Owner Tank Id: | Not reported |

**KENNEDY HYDRAULICS (Continued)** **U001566890**

| | |
|---|---|
| SWRCB Tank Id: | Not reported |
| Tank Status: | Not reported |
| Capacity: | Not reported |
| Active Date: | Not reported |
| Tank Use: | Not reported |
| STG: | Not reported |
| Content: | Not reported |
| Number Of Tanks: | Not reported |

HIST UST:

| | |
|---|---|
| File Number: | 00026A41 |
| URL: | http://geotracker.waterboards.ca.gov/ustpdfs/pdf/00026A41.pdf |
| Region: | STATE |
| Facility ID: | 00000050747 |
| Facility Type: | Other |
| Other Type: | DISTRIBUTOR |
| Contact Name: | RON HOOK |
| Telephone: | 2132453145 |
| Owner Name: | CARL J. KENNEDY COMPANY |
| Owner Address: | 521 COMMERCIAL STREET |
| Owner City,St,Zip: | GLENDALE, CA 91203 |
| Total Tanks: | 0000 |

| | |
|---|---|
| Tank Num: | 001 |
| Container Num: | 01 |
| Year Installed: | Not reported |
| Tank Capacity: | 00000500 |
| Tank Used for: | WASTE |
| Type of Fuel: | Not reported |
| Container Construction Thickness: | Not reported |
| Leak Detection: | None |

| | |
|---|---|
| Tank Num: | 001 |
| Container Num: | ONE |
| Year Installed: | Not reported |
| Tank Capacity: | 00000550 |
| Tank Used for: | WASTE |
| Type of Fuel: | WASTE OIL |
| Container Construction Thickness: | Not reported |
| Leak Detection: | Visual |

| | |
|---|---|
| Tank Num: | 001 |
| Container Num: | ONE |
| Year Installed: | Not reported |
| Tank Capacity: | 00000550 |
| Tank Used for: | WASTE |
| Type of Fuel: | WASTE OIL |
| Container Construction Thickness: | Not reported |
| Leak Detection: | Visual |

| | |
|---|---|
| Tank Num: | 001 |
| Container Num: | 01 |
| Year Installed: | Not reported |
| Tank Capacity: | 00000500 |
| Tank Used for: | WASTE |
| Type of Fuel: | Not reported |
| Container Construction Thickness: | Not reported |

**KENNEDY HYDRAULICS (Continued)** **U001566890**

Leak Detection: None

Click here for Geo Tracker PDF:

LOS ANGELES CO. HMS:

| | |
|---|---|
| Region: | LA |
| Permit Category: | Not reported |
| Facility Id: | 012164-012275 |
| Facility Type: | Not reported |
| Facility Status: | OPEN |
| Area: | 3D |
| Permit Number: | Not reported |
| Permit Status: | Not reported |

---

**Q116** **CARL J KENNEDY CO, INC** **RCRA-SQG** **1000274403**
**SE** **521 COMMERCIAL ST** **FINDS** **CAD009625120**
**1/8-1/4** **GLENDALE, CA 91203** **ECHO**
**0.228 mi.**
**1205 ft.** **Site 5 of 8 in cluster Q**

**Relative:**
**Higher**

**Actual:**
**477 ft.**

RCRA-SQG:

| | |
|---|---|
| Date form received by agency: | 09/01/1996 |
| Facility name: | CARL J KENNEDY CO, INC |
| Facility address: | 521 COMMERCIAL ST<br>GLENDALE, CA 91203 |
| EPA ID: | CAD009625120 |
| Mailing address: | P O BOX 4005<br>GLENDALE, CA 91202 |
| Contact: | Not reported |
| Contact address: | Not reported<br>Not reported |
| Contact country: | US |
| Contact telephone: | Not reported |
| Contact email: | Not reported |
| EPA Region: | 09 |
| Classification: | Small Small Quantity Generator |
| Description: | Handler: generates more than 100 and less than 1000 kg of hazardous waste during any calendar month and accumulates less than 6000 kg of hazardous waste at any time; or generates 100 kg or less of hazardous waste during any calendar month, and accumulates more than 1000 kg of hazardous waste at any time |

Owner/Operator Summary:

| | |
|---|---|
| Owner/operator name: | NOT REQUIRED |
| Owner/operator address: | NOT REQUIRED<br>NOT REQUIRED, ME 99999 |
| Owner/operator country: | Not reported |
| Owner/operator telephone: | (415) 555-1212 |
| Legal status: | Private |
| Owner/Operator Type: | Operator |
| Owner/Op start date: | Not reported |
| Owner/Op end date: | Not reported |
| Owner/operator name: | J P KENNEDY |
| Owner/operator address: | NOT REQUIRED<br>NOT REQUIRED, ME 99999 |
| Owner/operator country: | Not reported |

**CARL J KENNEDY CO, INC (Continued)** **1000274403**

Owner/operator telephone: (415) 555-1212
Legal status: Private
Owner/Operator Type: Owner
Owner/Op start date: Not reported
Owner/Op end date: Not reported

Handler Activities Summary:
U.S. importer of hazardous waste: No
Mixed waste (haz. and radioactive): No
Recycler of hazardous waste: No
Transporter of hazardous waste: No
Treater, storer or disposer of HW: No
Underground injection activity: No
On-site burner exemption: No
Furnace exemption: No
Used oil fuel burner: No
Used oil processor: No
User oil refiner: No
Used oil fuel marketer to burner: No
Used oil Specification marketer: No
Used oil transfer facility: No
Used oil transporter: No

Historical Generators:
Date form received by agency: 10/31/1985
Site name: CARL J KENNEDY CO, INC
Classification: Large Quantity Generator

Violation Status: No violations found

FINDS:

Registry ID: 110002637399

Environmental Interest/Information System
RCRAInfo is a national information system that supports the Resource Conservation and Recovery Act (RCRA) program through the tracking of events and activities related to facilities that generate, transport, and treat, store, or dispose of hazardous waste. RCRAInfo allows RCRA program staff to track the notification, permit, compliance, and corrective action activities required under RCRA.

ECHO:
Envid: 1000274403
Registry ID: 110002637399
DFR URL: http://echo.epa.gov/detailed_facility_report?fid=110002637399

**R117**
**NNW**
**1/8-1/4**
**0.229 mi.**
**1208 ft.**

**EASTERN CONTRACTORS, INC.**
**6004 SAN FERNANDO RD**
**GLENDALE, CA 91202**

**Site 3 of 9 in cluster R**

**WIP** **S106767401**
**N/A**

**Relative:**
**Higher**

**Actual:**
**469 ft.**

WIP:

| | |
|---|---|
| Region: | 4 |
| File Number: | 109.0030 |
| **File Status:** | **Historical** |
| Staff: | MH |
| Facility Suite: | Not reported |

---

**T118**
**SSE**
**1/8-1/4**
**0.230 mi.**
**1214 ft.**

**SUNLAND CHEMICAL AND RESEARCH**
**5440 SAN FERNANDO RD W**
**LOS ANGELES, CA 90039**

**Site 2 of 3 in cluster T**

**HIST UST** **S118231270**
**HAZNET** **N/A**

**Relative:**
**Lower**

**Actual:**
**466 ft.**

HIST UST:

| | |
|---|---|
| File Number: | 0002877F |
| URL: | http://geotracker.waterboards.ca.gov/ustpdfs/pdf/0002877F.pdf |
| Region: | Not reported |
| Facility ID: | Not reported |
| Facility Type: | Not reported |
| Other Type: | Not reported |
| Contact Name: | Not reported |
| Telephone: | Not reported |
| Owner Name: | Not reported |
| Owner Address: | Not reported |
| Owner City,St,Zip: | Not reported |
| Total Tanks: | Not reported |
| | |
| Tank Num: | Not reported |
| Container Num: | Not reported |
| Year Installed: | Not reported |
| Tank Capacity: | Not reported |
| Tank Used for: | Not reported |
| Type of Fuel: | Not reported |
| Container Construction Thickness: | Not reported |
| Leak Detection: | Not reported |

Click here for Geo Tracker PDF:

HAZNET:

| | |
|---|---|
| envid: | S118231270 |
| Year: | 2014 |
| GEPAID: | CAL000274422 |
| Contact: | JESUS VILLARREAL |
| Telephone: | 8185480916 |
| Mailing Name: | Not reported |
| Mailing Address: | 5440 SAN FERNANDO RD W |
| Mailing City,St,Zip: | LOS ANGELES, CA 900390000 |
| Gen County: | Los Angeles |
| TSD EPA ID: | CAD008364432 |
| TSD County: | Los Angeles |
| Waste Category: | Adhesives |
| Disposal Method: | Fuel Blending Prior To Energy Recovery At Another Site |
| Tons: | Not reported |

**SUNLAND CHEMICAL AND RESEARCH (Continued)** **S118231270**

Cat Decode: Adhesives
Method Decode: Fuel Blending Prior To Energy Recovery At Another Site
Facility County: Los Angeles

---

**N119**
**WNW**
**1/8-1/4**
**0.231 mi.**
**1222 ft.**

**L. A. WATER & POWER** **WIP** **S106767715**
**1000 S FLOWER ST** **N/A**
**GLENDALE, CA 91201**

**Site 3 of 4 in cluster N**

**Relative:**
**Lower**

**Actual:**
**458 ft.**

WIP:
Region: 4
File Number: 109.0799
**File Status: Historical**
Staff: UNIDENTIFIED
Facility Suite: Not reported

---

**N120**
**WNW**
**1/8-1/4**
**0.231 mi.**
**1222 ft.**

**GLENDALE WATER & POWER** **HIST UST** **S112961200**
**1000 FLOWER ST** **HAZNET** **N/A**
**GLENDALE, CA 91201**

**Site 4 of 4 in cluster N**

**Relative:**
**Lower**

**Actual:**
**458 ft.**

HIST UST:
File Number: 00027654
URL: http://geotracker.waterboards.ca.gov/ustpdfs/pdf/00027654.pdf
Region: Not reported
Facility ID: Not reported
Facility Type: Not reported
Other Type: Not reported
Contact Name: Not reported
Telephone: Not reported
Owner Name: Not reported
Owner Address: Not reported
Owner City,St,Zip: Not reported
Total Tanks: Not reported

Tank Num: Not reported
Container Num: Not reported
Year Installed: Not reported
Tank Capacity: Not reported
Tank Used for: Not reported
Type of Fuel: Not reported
Container Construction Thickness: Not reported
Leak Detection: Not reported

Tank Num: Not reported
Container Num: Not reported
Year Installed: Not reported
Tank Capacity: Not reported
Tank Used for: Not reported
Type of Fuel: Not reported
Container Construction Thickness: Not reported
Leak Detection: Not reported

**GLENDALE WATER & POWER (Continued)** **S112961200**

Click here for Geo Tracker PDF:

HAZNET:

| | |
|---|---|
| envid: | S112961200 |
| Year: | 2007 |
| GEPAID: | CAC002616305 |
| Contact: | MIRIAM SYKES/ENVIRON PROG SPECIALIS |
| Telephone: | 8185483807 |
| Mailing Name: | Not reported |
| Mailing Address: | 141 N GLENDALE AVE LEVEL 4 |
| Mailing City,St,Zip: | GLENDALE, CA 91206 |
| Gen County: | Not reported |
| TSD EPA ID: | CAT080013352 |
| TSD County: | Not reported |
| Waste Category: | Waste oil and mixed oil |
| Disposal Method: | Discharge To Sewer/Potw Or Npdes(With Prior Storage--With Or Without Treatment) |
| Tons: | 4.56 |
| Cat Decode: | Waste oil and mixed oil |
| Method Decode: | Discharge To Sewer/Potw Or Npdes(With Prior Storage--With Or Without Treatment) |
| Facility County: | Los Angeles |

---

**R121** **PACIFIC RIM ADMINISTRATION INC** **WIP** **S106767402**
**NNW** **6006 SAN FERNANDO RD** **N/A**
**1/8-1/4** **GLENDALE, CA 91202**
**0.232 mi.**
**1227 ft.** **Site 4 of 9 in cluster R**

**Relative:**
**Higher**

**Actual:**
**469 ft.**

WIP:

| | |
|---|---|
| Region: | 4 |
| File Number: | 109.0031 |
| **File Status:** | **Historical** |
| Staff: | TB |
| Facility Suite: | A |

---

**R122** **MASTERS CONTRACTING GROUP** **WIP** **S106767403**
**NNW** **6006 SAN FERNANDO RD** **N/A**
**1/8-1/4** **GLENDALE, CA 91202**
**0.232 mi.**
**1227 ft.** **Site 5 of 9 in cluster R**

**Relative:**
**Higher**

**Actual:**
**469 ft.**

WIP:

| | |
|---|---|
| Region: | 4 |
| File Number: | 109.0032 |
| **File Status:** | **Historical** |
| Staff: | TB |
| Facility Suite: | B |

**R123**
**NNW**
**1/8-1/4**
**0.232 mi.**
**1227 ft.**

**GEORGE HOPKINS CONST. INC**
**6006 SAN FERNANDO RD**
**GLENDALE, CA 91202**

**SWEEPS UST** **S102060411**
**LOS ANGELES CO. HMS** **N/A**

**Site 6 of 9 in cluster R**

**Relative:**
**Higher**

**Actual:**
**469 ft.**

SWEEPS UST:

| | |
|---|---|
| Status: | Active |
| Comp Number: | 10648 |
| Number: | 9 |
| Board Of Equalization: | Not reported |
| Referral Date: | 12-12-90 |
| Action Date: | 12-12-90 |
| Created Date: | 06-30-89 |
| Owner Tank Id: | Not reported |
| SWRCB Tank Id: | Not reported |
| Tank Status: | Not reported |
| Capacity: | Not reported |
| Active Date: | Not reported |
| Tank Use: | Not reported |
| STG: | Not reported |
| Content: | Not reported |
| Number Of Tanks: | Not reported |

LOS ANGELES CO. HMS:

| | |
|---|---|
| Region: | LA |
| Permit Category: | T |
| Facility Id: | 010701-010648 |
| Facility Type: | Not reported |
| Facility Status: | Removed |
| Area: | 3D |
| Permit Number: | Not reported |
| Permit Status: | Not reported |

---

**R124**
**NNW**
**1/8-1/4**
**0.232 mi.**
**1227 ft.**

**MR FENCE INC**
**6006 SAN FERNANDO RD**
**GLENDALE, CA 91202**

**HIST UST** **U001566876**
**N/A**

**Site 7 of 9 in cluster R**

**Relative:**
**Higher**

**Actual:**
**469 ft.**

HIST UST:

| | |
|---|---|
| File Number: | 000280E7 |
| URL: | http://geotracker.waterboards.ca.gov/ustpdfs/pdf/000280E7.pdf |
| Region: | STATE |
| Facility ID: | 00000005033 |
| Facility Type: | Other |
| Other Type: | FENCE CONTRACTOR |
| Contact Name: | ERIC KNUDSEN |
| Telephone: | 8182414179 |
| Owner Name: | MR. FENCE,INC. |
| Owner Address: | 6006 SANFERNANDO RD |
| Owner City,St,Zip: | GLENDALE, CA 91202 |
| Total Tanks: | 0001 |
| | |
| Tank Num: | 001 |
| Container Num: | 1 |
| Year Installed: | Not reported |
| Tank Capacity: | 00001500 |
| Tank Used for: | PRODUCT |

**MR FENCE INC (Continued)** **U001566876**

Type of Fuel: REGULAR
Container Construction Thickness: Not reported
Leak Detection: Visual, None

Click here for Geo Tracker PDF:

---

**S125** **DELSEN TESTING LABORATORIES INC** **SLIC** **S102815305**
**NW** **1024 GRAND CENTRAL AVE** **ENF** **N/A**
**1/8-1/4** **GLENDALE, CA 91201** **HAZNET**
**0.233 mi.** **WIP**
**1230 ft.** **Site 4 of 5 in cluster S**

**Relative:**
**Lower**

**Actual:**
**465 ft.**

SLIC:

| | |
|---|---|
| Region: | STATE |
| **Facility Status:** | **Completed - Case Closed** |
| Status Date: | 10/31/1997 |
| Global Id: | SL603798949 |
| Lead Agency: | LOS ANGELES RWQCB (REGION 4) |
| Lead Agency Case Number: | Not reported |
| Latitude: | 34.1590956977348 |
| Longitude: | -118.283742193146 |
| Case Type: | Cleanup Program Site |
| Case Worker: | Not reported |
| Local Agency: | Not reported |
| RB Case Number: | 109.0752 |
| File Location: | Not reported |
| Potential Media Affected: | Aquifer used for drinking water supply |
| Potential Contaminants of Concern: | Not reported |
| Site History: | Not reported |

Click here to access the California GeoTracker records for this facility:

ENF:

| | |
|---|---|
| Region: | 4 |
| Facility Id: | 219538 |
| Agency Name: | Delsen Testing Labs |
| Place Type: | Facility |
| Place Subtype: | Not reported |
| Facility Type: | Not reported |
| Agency Type: | Privately-Owned Business |
| # Of Agencies: | 1 |
| Place Latitude: | 34.159156 |
| Place Longitude: | -118.283263 |
| SIC Code 1: | Not reported |
| SIC Desc 1: | Not reported |
| SIC Code 2: | Not reported |
| SIC Desc 2: | Not reported |
| SIC Code 3: | Not reported |
| SIC Desc 3: | Not reported |
| NAICS Code 1: | Not reported |
| NAICS Desc 1: | Not reported |
| NAICS Code 2: | Not reported |
| NAICS Desc 2: | Not reported |
| NAICS Code 3: | Not reported |
| NAICS Desc 3: | Not reported |
| # Of Places: | 1 |
| Source Of Facility: | Reg Meas |

**DELSEN TESTING LABORATORIES INC (Continued)** **S102815305**

| | |
|---|---|
| Design Flow: | Not reported |
| Threat To Water Quality: | Not reported |
| Complexity: | Not reported |
| Pretreatment: | Not reported |
| Facility Waste Type: | Not reported |
| Facility Waste Type 2: | Not reported |
| Facility Waste Type 3: | Not reported |
| Facility Waste Type 4: | Not reported |
| Program: | WIP |
| Program Category1: | MONITORING |
| Program Category2: | MONITORING |
| # Of Programs: | 1 |
| WDID: | 4WIP1090752 |
| Reg Measure Id: | 157002 |
| Reg Measure Type: | Unregulated |
| Region: | 4 |
| Order #: | Not reported |
| Npdes# CA#: | Not reported |
| Major-Minor: | Not reported |
| Npdes Type: | Not reported |
| Reclamation: | Not reported |
| Dredge Fill Fee: | Not reported |
| 301H: | Not reported |
| Application Fee Amt Received: | Not reported |
| Status: | Historical |
| Status Date: | 06/17/2005 |
| Effective Date: | Not reported |
| Expiration/Review Date: | Not reported |
| Termination Date: | Not reported |
| WDR Review - Amend: | Not reported |
| WDR Review - Revise/Renew: | Not reported |
| WDR Review - Rescind: | Not reported |
| WDR Review - No Action Required: | Not reported |
| WDR Review - Pending: | Not reported |
| WDR Review - Planned: | Not reported |
| Status Enrollee: | N |
| Individual/General: | Not reported |
| Fee Code: | Not reported |
| Direction/Voice: | Passive |
| Enforcement Id(EID): | 226079 |
| Region: | 4 |
| Order / Resolution Number: | LT930909 |
| Enforcement Action Type: | 13267 Letter |
| Effective Date: | 09/09/1993 |
| Adoption/Issuance Date: | Not reported |
| Achieve Date: | Not reported |
| Termination Date: | Not reported |
| ACL Issuance Date: | Not reported |
| EPL Issuance Date: | Not reported |
| Status: | Historical |
| Title: | Enforcement - 4WIP1090752 |
| Description: | Not reported |
| Program: | WIP |
| Latest Milestone Completion Date: | Not reported |
| # Of Programs1: | 1 |
| Total Assessment Amount: | $0.00 |
| Initial Assessed Amount: | $0.00 |

**DELSEN TESTING LABORATORIES INC (Continued)** **S102815305**

| | |
|---|---|
| Liability $ Amount: | $0.00 |
| Project $ Amount: | $0.00 |
| Liability $ Paid: | $0.00 |
| Project $ Completed: | $0.00 |
| Total $ Paid/Completed Amount: | $0.00 |
| | |
| Region: | 4 |
| Facility Id: | 219538 |
| Agency Name: | Delsen Testing Labs |
| Place Type: | Facility |
| Place Subtype: | Not reported |
| Facility Type: | Not reported |
| Agency Type: | Privately-Owned Business |
| # Of Agencies: | 1 |
| Place Latitude: | 34.159156 |
| Place Longitude: | -118.283263 |
| SIC Code 1: | Not reported |
| SIC Desc 1: | Not reported |
| SIC Code 2: | Not reported |
| SIC Desc 2: | Not reported |
| SIC Code 3: | Not reported |
| SIC Desc 3: | Not reported |
| NAICS Code 1: | Not reported |
| NAICS Desc 1: | Not reported |
| NAICS Code 2: | Not reported |
| NAICS Desc 2: | Not reported |
| NAICS Code 3: | Not reported |
| NAICS Desc 3: | Not reported |
| # Of Places: | 1 |
| Source Of Facility: | Reg Meas |
| Design Flow: | Not reported |
| Threat To Water Quality: | Not reported |
| Complexity: | Not reported |
| Pretreatment: | Not reported |
| Facility Waste Type: | Not reported |
| Facility Waste Type 2: | Not reported |
| Facility Waste Type 3: | Not reported |
| Facility Waste Type 4: | Not reported |
| Program: | WIP |
| Program Category1: | MONITORING |
| Program Category2: | MONITORING |
| # Of Programs: | 1 |
| WDID: | 4WIP1090752 |
| Reg Measure Id: | 157002 |
| Reg Measure Type: | Unregulated |
| Region: | 4 |
| Order #: | Not reported |
| Npdes# CA#: | Not reported |
| Major-Minor: | Not reported |
| Npdes Type: | Not reported |
| Reclamation: | Not reported |
| Dredge Fill Fee: | Not reported |
| 301H: | Not reported |
| Application Fee Amt Received: | Not reported |
| Status: | Historical |
| Status Date: | 06/17/2005 |
| Effective Date: | Not reported |

**DELSEN TESTING LABORATORIES INC (Continued)** **S102815305**

| | |
|---|---|
| Expiration/Review Date: | Not reported |
| Termination Date: | Not reported |
| WDR Review - Amend: | Not reported |
| WDR Review - Revise/Renew: | Not reported |
| WDR Review - Rescind: | Not reported |
| WDR Review - No Action Required: | Not reported |
| WDR Review - Pending: | Not reported |
| WDR Review - Planned: | Not reported |
| Status Enrollee: | N |
| Individual/General: | Not reported |
| Fee Code: | Not reported |
| Direction/Voice: | Passive |
| Enforcement Id(EID): | 221009 |
| Region: | 4 |
| Order / Resolution Number: | 13267 Letter |
| Enforcement Action Type: | 13267 Letter |
| Effective Date: | 11/09/2000 |
| Adoption/Issuance Date: | Not reported |
| Achieve Date: | Not reported |
| Termination Date: | 11/09/2000 |
| ACL Issuance Date: | Not reported |
| EPL Issuance Date: | Not reported |
| Status: | Historical |
| Title: | Enforcement - 4WIP1090752 |
| Description: | Not reported |
| Program: | WIP |
| Latest Milestone Completion Date: | Not reported |
| # Of Programs1: | 1 |
| Total Assessment Amount: | $0.00 |
| Initial Assessed Amount: | $0.00 |
| Liability $ Amount: | $0.00 |
| Project $ Amount: | $0.00 |
| Liability $ Paid: | $0.00 |
| Project $ Completed: | $0.00 |
| Total $ Paid/Completed Amount: | $0.00 |

HAZNET:

| | |
|---|---|
| envid: | S102815305 |
| Year: | 2014 |
| GEPAID: | CAL000388989 |
| Contact: | JOHN MOYLAN |
| Telephone: | 8182960444 |
| Mailing Name: | Not reported |
| Mailing Address: | 1024 GRAND CENTRAL AVE |
| Mailing City,St,Zip: | GLENDALE, CA 912010000 |
| Gen County: | Los Angeles |
| TSD EPA ID: | NMD002208627 |
| TSD County: | 99 |
| Waste Category: | Laboratory waste chemicals |
| Disposal Method: | Storage, Bulking, And/Or Transfer Off Site--No Treatment/Reovery (H010-H129) Or (H131-H135) |
| Tons: | 0.0045 |
| Cat Decode: | Laboratory waste chemicals |
| Method Decode: | Storage, Bulking, And/Or Transfer Off Site--No Treatment/Reovery (H010-H129) Or (H131-H135) |
| Facility County: | Los Angeles |

**DELSEN TESTING LABORATORIES INC (Continued)** **S102815305**

envid: S102815305
Year: 2014
GEPAID: CAL000388989
Contact: JOHN MOYLAN
Telephone: 8182960444
Mailing Name: Not reported
Mailing Address: 1024 GRAND CENTRAL AVE
Mailing City,St,Zip: GLENDALE, CA 912010000
Gen County: Los Angeles
TSD EPA ID: NVT330010000
TSD County: 99
Waste Category: Off-specification, aged or surplus organics
Disposal Method: Other Recovery Of Reclamation For Reuse Including Acid Regeneration, Organics Recovery Ect
Tons: 0.047
Cat Decode: Off-specification, aged or surplus organics
Method Decode: Other Recovery Of Reclamation For Reuse Including Acid Regeneration, Organics Recovery Ect
Facility County: Los Angeles

envid: S102815305
Year: 2014
GEPAID: CAL000388989
Contact: JOHN MOYLAN
Telephone: 8182960444
Mailing Name: Not reported
Mailing Address: 1024 GRAND CENTRAL AVE
Mailing City,St,Zip: GLENDALE, CA 912010000
Gen County: Los Angeles
TSD EPA ID: NMD002208627
TSD County: 99
Waste Category: Off-specification, aged or surplus organics
Disposal Method: Storage, Bulking, And/Or Transfer Off Site--No Treatment/Reovery (H010-H129) Or (H131-H135)
Tons: 0.1535
Cat Decode: Off-specification, aged or surplus organics
Method Decode: Storage, Bulking, And/Or Transfer Off Site--No Treatment/Reovery (H010-H129) Or (H131-H135)
Facility County: Los Angeles

envid: S102815305
Year: 2014
GEPAID: CAL000388989
Contact: JOHN MOYLAN
Telephone: 8182960444
Mailing Name: Not reported
Mailing Address: 1024 GRAND CENTRAL AVE
Mailing City,St,Zip: GLENDALE, CA 912010000
Gen County: Los Angeles
TSD EPA ID: NVT330010000
TSD County: 99
Waste Category: Liquids with pH <= 2
Disposal Method: Other Recovery Of Reclamation For Reuse Including Acid Regeneration, Organics Recovery Ect
Tons: 0.338
Cat Decode: Liquids with pH <= 2
Method Decode: Other Recovery Of Reclamation For Reuse Including Acid Regeneration,

**DELSEN TESTING LABORATORIES INC (Continued)** **S102815305**

Organics Recovery Ect
Facility County: Los Angeles

envid: S102815305
Year: 2014
GEPAID: CAL000388989
Contact: JOHN MOYLAN
Telephone: 8182960444
Mailing Name: Not reported
Mailing Address: 1024 GRAND CENTRAL AVE
Mailing City,St,Zip: GLENDALE, CA 912010000
Gen County: Los Angeles
TSD EPA ID: NMD002208627
TSD County: 99
Waste Category: Liquids with halogenated organic compounds >= 1,000 Mg./L
Disposal Method: Storage, Bulking, And/Or Transfer Off Site--No Treatment/Reovery (H010-H129) Or (H131-H135)
Tons: 0.0315
Cat Decode: Liquids with halogenated organic compounds >= 1,000 Mg./L
Method Decode: Storage, Bulking, And/Or Transfer Off Site--No Treatment/Reovery (H010-H129) Or (H131-H135)
Facility County: Los Angeles

Click this hyperlink while viewing on your computer to access
2 additional CA_HAZNET: record(s) in the EDR Site Report.

WIP:
Region: 4
File Number: 109.0752
**File Status: Active**
Staff: ACASTANE
Facility Suite: Not reported

---

**S126** **PRUDENTIAL INSURANCE CO** **WIP** **S106767692**
**NW** **1025 GRAND CENTRAL AVE** **N/A**
**1/8-1/4** **GLENDALE, CA 91201**
**0.234 mi.**
**1233 ft.** **Site 5 of 5 in cluster S**

**Relative:**
**Lower**

**Actual:**
**465 ft.**

WIP:
Region: 4
File Number: 109.0765
**File Status: Historical**
Staff: UNIDENTIFIED
Facility Suite: Not reported

**R127**
**NNW**
**1/8-1/4**
**0.236 mi.**
**1245 ft.**

**VIDEO CENTER**
**6008 SAN FERNANDO RD**
**GLENDALE, CA 91202**

**Site 8 of 9 in cluster R**

**Relative:**
**Higher**

**Actual:**
**470 ft.**

WIP:
Region: 4
File Number: 109.1678
**File Status: Historical**
Staff: KLEE
Facility Suite: Not reported

**WIP** **S106767924**
**N/A**

---

**Q128**
**SE**
**1/8-1/4**
**0.239 mi.**
**1262 ft.**

**MAT SOURCE**
**516 COMMERCIAL ST**
**GLENDALE, CA 91203**

**Site 6 of 8 in cluster Q**

**Relative:**
**Higher**

**Actual:**
**477 ft.**

WIP:
Region: 4
File Number: 109.0289
**File Status: Historical**
Staff: ACARLOS
Facility Suite: Not reported

**WIP** **S106767480**
**N/A**

---

**R129**
**NNW**
**1/8-1/4**
**0.239 mi.**
**1263 ft.**

**M & M SHOP**
**6010 SAN FERNANDO RD**
**GLENDALE, CA 91202**

**Site 9 of 9 in cluster R**

**Relative:**
**Higher**

**Actual:**
**470 ft.**

WIP:
Region: 4
File Number: 109.0034
**File Status: Historical**
Staff: KLEE
Facility Suite: Not reported

**WIP** **S103666434**
**N/A**

---

**Q130**
**SE**
**1/8-1/4**
**0.241 mi.**
**1272 ft.**

**FABRIC FLAMEPROOFING CO**
**835 MILFORD ST**
**GLENDALE, CA 91203**

**Site 7 of 8 in cluster Q**

**Relative:**
**Higher**

**Actual:**
**473 ft.**

RCRA-SQG:
Date form received by agency: 02/02/2010
Facility name: FABRIC FLAMEPROOFING CO
Facility address: 835 MILFORD ST
GLENDALE, CA 91203
EPA ID: CAR000204941
Contact: JONATHAN CURTSINGER
Contact address: 835 MILFORD ST
GLENDALE, CA 91203
Contact country: US
Contact telephone: 323-245-1701
Contact email: OFFICE@FABRICFLAMEPROOFINGCO.COM

**RCRA-SQG** **1014387066**
**CAR000204941**

**FABRIC FLAMEPROOFING CO (Continued)** **1014387066**

EPA Region: 09
Classification: Small Small Quantity Generator
Description: Handler: generates more than 100 and less than 1000 kg of hazardous waste during any calendar month and accumulates less than 6000 kg of hazardous waste at any time; or generates 100 kg or less of hazardous waste during any calendar month, and accumulates more than 1000 kg of hazardous waste at any time

Owner/Operator Summary:
Owner/operator name: JONATHAN CURTSINGER
Owner/operator address: 835 MILFORD ST
GLENDALE, CA 91203
Owner/operator country: US
Owner/operator telephone: 323-245-1701
Legal status: Private
Owner/Operator Type: Owner
Owner/Op start date: 07/01/2008
Owner/Op end date: Not reported

Owner/operator name: FABRIC FLAMEPROOFING CO INC
Owner/operator address: Not reported
Not reported
Owner/operator country: Not reported
Owner/operator telephone: Not reported
Legal status: Private
Owner/Operator Type: Operator
Owner/Op start date: 02/26/1976
Owner/Op end date: Not reported

Handler Activities Summary:
U.S. importer of hazardous waste: No
Mixed waste (haz. and radioactive): No
Recycler of hazardous waste: No
Transporter of hazardous waste: No
Treater, storer or disposer of HW: No
Underground injection activity: No
On-site burner exemption: No
Furnace exemption: No
Used oil fuel burner: No
Used oil processor: No
User oil refiner: No
Used oil fuel marketer to burner: No
Used oil Specification marketer: No
Used oil transfer facility: No
Used oil transporter: No

. Waste code: D001
. Waste name: IGNITABLE WASTE

. Waste code: D002
. Waste name: CORROSIVE WASTE

Violation Status: No violations found

**Q131**
**SE**
**1/8-1/4**
**0.241 mi.**
**1272 ft.**

**FABRIC FLAMEPROOFING**
**835 W MILFORD ST**
**GLENDALE, CA 91203**

**WIP** **S106769376**
**N/A**

**Site 8 of 8 in cluster Q**

**Relative:**
**Higher**

**Actual:**
**473 ft.**

WIP:

| | |
|---|---|
| Region: | 4 |
| File Number: | 113.0286 |
| **File Status:** | **Historical** |
| Staff: | JG |
| Facility Suite: | Not reported |

---

**U132**
**SSE**
**1/8-1/4**
**0.242 mi.**
**1277 ft.**

**ACTIVE SUPPLY CO.**
**5433 SAN FERNANDO ROAD WEST**
**LOS ANGELES, CA 90039**

**RCRA-LQG** **1014386609**
**CAD981376668**

**Site 1 of 2 in cluster U**

**Relative:**
**Lower**

**Actual:**
**466 ft.**

RCRA-LQG:

| | |
|---|---|
| Date form received by agency: | 05/11/2010 |
| Facility name: | ACTIVE SUPPLY CO. |
| Facility address: | 5433 SAN FERNANDO ROAD WEST<br>LOS ANGELES, CA 90039 |
| EPA ID: | CAD981376668 |
| Mailing address: | P.O. BOX 39125<br>LOS ANGELES, CA 90039 |
| Contact: | SAMUEL C ORTOLANO |
| Contact address: | P.O. BOX 39125<br>LOS ANGELES, CA 90039 |
| Contact country: | US |
| Contact telephone: | (323) 245-5737 |
| Contact email: | ACTIVE-SUPPLYCO@SBCGLOBAL.NET |
| EPA Region: | 09 |
| Classification: | Large Quantity Generator |
| Description: | Handler: generates 1,000 kg or more of hazardous waste during any calendar month; or generates more than 1 kg of acutely hazardous waste during any calendar month; or generates more than 100 kg of any residue or contaminated soil, waste or other debris resulting from the cleanup of a spill, into or on any land or water, of acutely hazardous waste during any calendar month; or generates 1 kg or less of acutely hazardous waste during any calendar month, and accumulates more than 1 kg of acutely hazardous waste at any time; or generates 100 kg or less of any residue or contaminated soil, waste or other debris resulting from the cleanup of a spill, into or on any land or water, of acutely hazardous waste during any calendar month, and accumulates more than 100 kg of that material at any time |

Owner/Operator Summary:

| | |
|---|---|
| Owner/operator name: | SCHOENFELD TRUST |
| Owner/operator address: | P.O. BOX 39125<br>LOS ANGELES, CA 90039 |
| Owner/operator country: | US |
| Owner/operator telephone: | Not reported |
| Legal status: | Private |
| Owner/Operator Type: | Owner |
| Owner/Op start date: | 08/19/2001 |
| Owner/Op end date: | Not reported |

**ACTIVE SUPPLY CO. (Continued)** **1014386609**

Owner/operator name: ACTIVE SUPPLY
Owner/operator address: Not reported
Not reported
Owner/operator country: US
Owner/operator telephone: Not reported
Legal status: Private
Owner/Operator Type: Operator
Owner/Op start date: 08/01/1977
Owner/Op end date: Not reported

Handler Activities Summary:
U.S. importer of hazardous waste: No
Mixed waste (haz. and radioactive): No
Recycler of hazardous waste: No
Transporter of hazardous waste: No
Treater, storer or disposer of HW: No
Underground injection activity: No
On-site burner exemption: No
Furnace exemption: No
Used oil fuel burner: No
Used oil processor: No
User oil refiner: No
Used oil fuel marketer to burner: No
Used oil Specification marketer: No
Used oil transfer facility: No
Used oil transporter: No

. Waste code: D001
. Waste name: IGNITABLE WASTE

. Waste code: F003
. Waste name: THE FOLLOWING SPENT NONHALOGENATED SOLVENTS: XYLENE, ACETONE, ETHYL ACETATE, ETHYL BENZENE, ETHYL ETHER, METHYL ISOBUTYL KETONE, N-BUTYL ALCOHOL, CYCLOHEXANONE, AND METHANOL; ALL SPENT SOLVENT MIXTURES/BLENDS CONTAINING, BEFORE USE, ONLY THE ABOVE SPENT NONHALOGENATED SOLVENTS; AND ALL SPENT SOLVENT MIXTURES/BLENDS CONTAINING, BEFORE USE, ONE OR MORE OF THE ABOVE NONHALOGENATED SOLVENTS, AND A TOTAL OF TEN PERCENT OR MORE (BY VOLUME) OF ONE OR MORE OF THOSE SOLVENTS LISTED IN F001, F002, F004, AND F005; AND STILL BOTTOMS FROM THE RECOVERY OF THESE SPENT SOLVENTS AND SPENT SOLVENT MIXTURES.

. Waste code: F005
. Waste name: THE FOLLOWING SPENT NONHALOGENATED SOLVENTS: TOLUENE, METHYL ETHYL KETONE, CARBON DISULFIDE, ISOBUTANOL, PYRIDINE, BENZENE, 2-ETHOXYETHANOL, AND 2-NITROPROPANE; ALL SPENT SOLVENT MIXTURES/BLENDS CONTAINING, BEFORE USE, A TOTAL OF TEN PERCENT OR MORE (BY VOLUME) OF ONE OR MORE OF THE ABOVE NONHALOGENATED SOLVENTS OR THOSE SOLVENTS LISTED IN F001, F002, OR F004; AND STILL BOTTOMS FROM THE RECOVERY OF THESE SPENT SOLVENTS AND SPENT SOLVENT MIXTURES.

Violation Status: No violations found

**U133**
**SSE**
**1/8-1/4**
**0.245 mi.**
**1294 ft.**

**ACTIVE WINDOW PRODUCTS**
**5431 W SAN FERNANDO RD**
**LOS ANGELES, CA 90039**

**WIP** **S106767501**
**N/A**

**Site 2 of 2 in cluster U**

**Relative:**
**Lower**

**Actual:**
**466 ft.**

WIP:

| | |
|---|---|
| Region: | 4 |
| File Number: | 109.0457 |
| **File Status:** | **Historical** |
| Staff: | KLEE |
| Facility Suite: | Not reported |

---

**T134**
**SSE**
**1/8-1/4**
**0.246 mi.**
**1300 ft.**

**PRODUCTS RESEARCH & CHEM**
**5430 SAN FERNANDO**
**LOS ANGELES, CA 90039**

**HIST CORTESE** **S105024681**
**N/A**

**Site 3 of 3 in cluster T**

**Relative:**
**Lower**

**Actual:**
**466 ft.**

HIST CORTESE:

| | |
|---|---|
| Region: | CORTESE |
| Facility County Code: | 19 |
| Reg By: | LTNKA |
| Reg Id: | R-10470 |

---

**V135**
**ESE**
**1/8-1/4**
**0.246 mi.**
**1301 ft.**

**HOWARD DEVELOPEMENT**
**800 W DORAN ST**
**GLENDALE, CA 91203**

**SWEEPS UST** **S102056894**
**LOS ANGELES CO. HMS** **N/A**

**Site 1 of 3 in cluster V**

**Relative:**
**Higher**

**Actual:**
**483 ft.**

SWEEPS UST:

| | |
|---|---|
| Status: | Active |
| Comp Number: | 12276 |
| Number: | 9 |
| Board Of Equalization: | Not reported |
| Referral Date: | 12-11-90 |
| Action Date: | 12-11-90 |
| Created Date: | 06-30-89 |
| Owner Tank Id: | Not reported |
| SWRCB Tank Id: | Not reported |
| Tank Status: | Not reported |
| Capacity: | Not reported |
| Active Date: | Not reported |
| Tank Use: | Not reported |
| STG: | Not reported |
| Content: | Not reported |
| Number Of Tanks: | Not reported |

LOS ANGELES CO. HMS:

| | |
|---|---|
| Region: | LA |
| Permit Category: | T |
| Facility Id: | 012165-012276 |
| Facility Type: | Not reported |
| Facility Status: | Removed |
| Area: | 3D |
| Permit Number: | Not reported |
| Permit Status: | Not reported |

**V136 ESE 1/8-1/4 0.246 mi. 1301 ft.** | **VIVA CONCEPTS LLC**
**800 W DORAN ST**
**GLENDALE, CA 91203**

**Site 2 of 3 in cluster V**

**HIST UST** | **S113802412**
**HAZNET** | **N/A**

**Relative: Higher**

**Actual: 483 ft.**

HIST UST:

| | |
|---|---|
| File Number: | 000268C6 |
| URL: | http://geotracker.waterboards.ca.gov/ustpdfs/pdf/000268C6.pdf |
| Region: | Not reported |
| Facility ID: | Not reported |
| Facility Type: | Not reported |
| Other Type: | Not reported |
| Contact Name: | Not reported |
| Telephone: | Not reported |
| Owner Name: | Not reported |
| Owner Address: | Not reported |
| Owner City,St,Zip: | Not reported |
| Total Tanks: | Not reported |
| | |
| Tank Num: | Not reported |
| Container Num: | Not reported |
| Year Installed: | Not reported |
| Tank Capacity: | Not reported |
| Tank Used for: | Not reported |
| Type of Fuel: | Not reported |
| Container Construction Thickness: | Not reported |
| Leak Detection: | Not reported |

Click here for Geo Tracker PDF:

HAZNET:

| | |
|---|---|
| envid: | S113802412 |
| Year: | 2013 |
| GEPAID: | CAL000376875 |
| Contact: | GIBRAN MINOZIANO |
| Telephone: | 3104039234 |
| Mailing Name: | Not reported |
| Mailing Address: | 1025 N BRAND BLVD STE 301 |
| Mailing City,St,Zip: | GLENDALE, CA 91202 |
| Gen County: | Los Angeles |
| TSD EPA ID: | CAD044429835 |
| TSD County: | Los Angeles |
| Waste Category: | Not reported |
| Disposal Method: | Storage, Bulking, And/Or Transfer Off Site--No Treatment/Reovery (H010-H129) Or (H131-H135) |
| Tons: | 0.437 |
| Cat Decode: | Not reported |
| Method Decode: | Storage, Bulking, And/Or Transfer Off Site--No Treatment/Reovery (H010-H129) Or (H131-H135) |
| Facility County: | Not reported |
| | |
| envid: | S113802412 |
| Year: | 2012 |
| GEPAID: | CAL000376875 |
| Contact: | GIBRAN MINOZIANO |
| Telephone: | 3104039234 |
| Mailing Name: | Not reported |
| Mailing Address: | 1025 N BRAND BLVD STE 301 |

**VIVA CONCEPTS LLC (Continued)** **S113802412**

| | |
|---|---|
| Mailing City,St,Zip: | GLENDALE, CA 91202 |
| Gen County: | Los Angeles |
| TSD EPA ID: | CAD044429835 |
| TSD County: | Los Angeles |
| Waste Category: | Not reported |
| Disposal Method: | Storage, Bulking, And/Or Transfer Off Site--No Treatment/Reovery (H010-H129) Or (H131-H135) |
| Tons: | 0.418 |
| Cat Decode: | Not reported |
| Method Decode: | Storage, Bulking, And/Or Transfer Off Site--No Treatment/Reovery (H010-H129) Or (H131-H135) |
| Facility County: | Los Angeles |

---

**V137**
**ESE**
**1/8-1/4**
**0.246 mi.**
**1301 ft.**

**TITLE LAND COMPANY** **WIP** **U001566888**
**800 W DORAN ST** **N/A**
**GLENDALE, CA 91203**

**Site 3 of 3 in cluster V**

**Relative:**
**Higher**

**Actual:**
**483 ft.**

WIP:

| | |
|---|---|
| Region: | 4 |
| File Number: | 109.0291 |
| **File Status:** | **Historical** |
| Staff: | AVELOZ |
| Facility Suite: | Not reported |

---

**138**
**NW**
**1/8-1/4**
**0.248 mi.**
**1310 ft.**

**BEZJIAN** **WIP** **S106767637**
**1020 AIRWAY** **N/A**
**GLENDALE, CA 91201**

**Relative:**
**Higher**

**Actual:**
**468 ft.**

WIP:

| | |
|---|---|
| Region: | 4 |
| File Number: | 109.0689 |
| **File Status:** | **Historical** |
| Staff: | MH |
| Facility Suite: | Not reported |

---

**139**
**East**
**1/8-1/4**
**0.248 mi.**
**1311 ft.**

**ALANDALE INS. AGENCY** **WIP** **S106767500**
**750 FAIRMONT AVE** **N/A**
**GLENDALE, CA 91209**

**Relative:**
**Higher**

**Actual:**
**483 ft.**

WIP:

| | |
|---|---|
| Region: | 4 |
| File Number: | 109.0447 |
| **File Status:** | **Historical** |
| Staff: | YRONG |
| Facility Suite: | Not reported |

**140 SE 1/4-1/2 0.282 mi. 1490 ft.** | **J.J. CHEROKEE**
**815 W MILFORD ST**
**GLENDALE, CA 91203** | **SLIC WIP** | **S106769403 N/A**

**Relative: Higher**

**Actual: 477 ft.**

SLIC:

| | |
|---|---|
| Region: | STATE |
| **Facility Status:** | **Completed - Case Closed** |
| Status Date: | 05/13/2014 |
| Global Id: | T10000004771 |
| Lead Agency: | LOS ANGELES RWQCB (REGION 4) |
| Lead Agency Case Number: | Not reported |
| Latitude: | 34.1523296 |
| Longitude: | -118.272948 |
| Case Type: | Cleanup Program Site |
| Case Worker: | JL |
| Local Agency: | Not reported |
| RB Case Number: | 113.0324 |
| File Location: | Not reported |
| Potential Media Affected: | Not reported |
| Potential Contaminants of Concern: | Not reported |
| Site History: | Not reported |

Click here to access the California GeoTracker records for this facility:

WIP:

| | |
|---|---|
| Region: | 4 |
| File Number: | 113.0324 |
| **File Status:** | **Historical** |
| Staff: | RNEVAREZ |
| Facility Suite: | Not reported |

---

**141 WSW 1/4-1/2 0.287 mi. 1513 ft.** | **STATE GUARD AIR FIELD**
**GRIFFITH PARK, CA** | **ENVIROSTOR** | **S107737406 N/A**

**Relative: Lower**

**Actual: 457 ft.**

ENVIROSTOR:

| | |
|---|---|
| Facility ID: | 80000865 |
| Status: | Inactive - Needs Evaluation |
| Status Date: | 07/01/2005 |
| Site Code: | Not reported |
| Site Type: | Military Evaluation |
| Site Type Detailed: | FUDS |
| Acres: | Not reported |
| NPL: | NO |
| Regulatory Agencies: | SMBRP |
| Lead Agency: | SMBRP |
| Program Manager: | Not reported |
| Supervisor: | Douglas Bautista |
| Division Branch: | Cleanup Cypress |
| Assembly: | 43 |
| Senate: | 25 |
| Special Program: | Not reported |
| Restricted Use: | NO |
| Site Mgmt Req: | NONE SPECIFIED |
| Funding: | DERA |

**STATE GUARD AIR FIELD (Continued)** **S107737406**

Latitude: 34.15277
Longitude: -118.2833
APN: NONE SPECIFIED
Past Use: NONE SPECIFIED
Potential COC: NONE SPECIFIED
Confirmed COC: NONE SPECIFIED
Potential Description: NONE SPECIFIED
Alias Name: CA99799F998600
Alias Type: Federal Facility ID
Alias Name: J09CA7163
Alias Type: INPR
Alias Name: 80000865
Alias Type: Envirostor ID Number

Completed Info:
Completed Area Name: Not reported
Completed Sub Area Name: Not reported
Completed Document Type: Not reported
Completed Date: Not reported
Comments: Not reported

Future Area Name: Not reported
Future Sub Area Name: Not reported
Future Document Type: Not reported
Future Due Date: Not reported
Schedule Area Name: Not reported
Schedule Sub Area Name: Not reported
Schedule Document Type: Not reported
Schedule Due Date: Not reported
Schedule Revised Date: Not reported

---

**142**
**NNW**
**1/4-1/2**
**0.291 mi.**
**1534 ft.**

**HYBRID SYSEMS (FORMER E.F. GRAPHICS)** **SLIC** **S106484723**
**6040 SAN FERNANDO RD** **WIP** **N/A**
**GLENDALE, CA 91202**

**Relative:**
**Higher**

**Actual:**
**471 ft.**

SLIC:
Region: STATE
**Facility Status:** **Completed - Case Closed**
Status Date: 12/22/2014
Global Id: SL603798924
Lead Agency: LOS ANGELES RWQCB (REGION 4)
Lead Agency Case Number: Not reported
Latitude: 34.1597
Longitude: -118.2794
Case Type: Cleanup Program Site
Case Worker: GJH
Local Agency: Not reported
RB Case Number: 109.0039
File Location: Not reported
Potential Media Affected: Aquifer used for drinking water supply
Potential Contaminants of Concern: Not reported
Site History: Not reported

Click here to access the California GeoTracker records for this facility:

**HYBRID SYSEMS (FORMER E.F. GRAPHICS) (Continued)** **S106484723**

WIP:
Region: 4
File Number: 109.0039
**File Status: Backlog**
Staff: UNIDENTIFIED
Facility Suite: Not reported

---

**W143**
**SE**
**1/4-1/2**
**0.298 mi.**
**1576 ft.**

**E.L. FLEMMING DUMP** **SWF/LF** **S109821534**
**5431 SAN FERNANDO RD** **N/A**
**LOS ANGELES (CITY), CA**

**Site 1 of 4 in cluster W**

**Relative:**
**Higher**

**Actual:**
**469 ft.**

SWF/LF (SWIS):

| | |
|---|---|
| Region: | STATE |
| Facility ID: | 19-AR-5041 |
| Lat/Long: | 34.150410 / -118.27521 |
| Owner Name: | Not reported |
| Owner Telephone: | Not reported |
| Owner Address: | Not reported |
| Owner Address2: | Not reported |
| Owner City,St,Zip: | Not reported |
| Operational Status: | Not reported |
| Operator: | Not reported |
| Operator Phone: | Not reported |
| Operator Address: | Not reported |
| Operator Address2: | Not reported |
| Operator City,St,Zip: | Not reported |
| Permit Date: | Not reported |
| Permit Status: | Not reported |
| Permitted Acreage: | Not reported |
| Activity: | Not reported |
| Regulation Status: | Not reported |
| Landuse Name: | Urban,Commercial |
| GIS Source: | GPS |
| Category: | Not reported |
| Unit Number: | Not reported |
| Inspection Frequency: | Not reported |
| Accepted Waste: | Not reported |
| Closure Date: | Not reported |
| Closure Type: | Not reported |
| Disposal Acreage: | Not reported |
| SWIS Num: | 19-AR-5041 |
| Waste Discharge Requirement Num: | Not reported |
| Program Type: | Not reported |
| Permitted Throughput with Units: | Not reported |
| Actual Throughput with Units: | Not reported |
| Permitted Capacity with Units: | Not reported |
| Remaining Capacity: | Not reported |
| Remaining Capacity with Units: | Not reported |
| Lat/Long: | 34.150410 / -118.27521 |

**W144 SE 1/4-1/2 0.330 mi. 1741 ft.** | **PRC-DESOTO INTERNATIONAL, INC.**
**5430 SAN FERNANDO ROAD**
**GLENDALE, CA 91203**

**Site 2 of 4 in cluster W**

**ENF**
**LOS ANGELES CO. HMS**
**Notify 65**
**WIP**

**S100178492**
**N/A**

**Relative: Higher**

**Actual: 468 ft.**

ENF:

| | |
|---|---|
| Region: | 4 |
| Facility Id: | 249064 |
| Agency Name: | PRC-DeSoto International, Inc |
| Place Type: | Manufacturing |
| Place Subtype: | Manufacturing NEC |
| Facility Type: | Industrial |
| Agency Type: | Privately-Owned Business |
| # Of Agencies: | 1 |
| Place Latitude: | 34.1513 |
| Place Longitude: | -118.273 |
| SIC Code 1: | Not reported |
| SIC Desc 1: | Not reported |
| SIC Code 2: | Not reported |
| SIC Desc 2: | Not reported |
| SIC Code 3: | Not reported |
| SIC Desc 3: | Not reported |
| NAICS Code 1: | Not reported |
| NAICS Desc 1: | Not reported |
| NAICS Code 2: | Not reported |
| NAICS Desc 2: | Not reported |
| NAICS Code 3: | Not reported |
| NAICS Desc 3: | Not reported |
| # Of Places: | 1 |
| Source Of Facility: | Reg Meas |
| Design Flow: | Not reported |
| Threat To Water Quality: | Not reported |
| Complexity: | Not reported |
| Pretreatment: | Not reported |
| Facility Waste Type: | Not reported |
| Facility Waste Type 2: | Not reported |
| Facility Waste Type 3: | Not reported |
| Facility Waste Type 4: | Not reported |
| Program: | WIP |
| Program Category1: | MONITORING |
| Program Category2: | MONITORING |
| # Of Programs: | 1 |
| WDID: | 4WIP1135886 |
| Reg Measure Id: | 165866 |
| Reg Measure Type: | Unregulated |
| Region: | 4 |
| Order #: | Not reported |
| Npdes# CA#: | Not reported |
| Major-Minor: | Not reported |
| Npdes Type: | Not reported |
| Reclamation: | Not reported |
| Dredge Fill Fee: | Not reported |
| 301H: | Not reported |
| Application Fee Amt Received: | Not reported |
| Status: | Never Active |
| Status Date: | 02/20/2013 |
| Effective Date: | Not reported |
| Expiration/Review Date: | Not reported |

**PRC-DESOTO INTERNATIONAL, INC. (Continued)** **S100178492**

| | |
|---|---|
| Termination Date: | Not reported |
| WDR Review - Amend: | Not reported |
| WDR Review - Revise/Renew: | Not reported |
| WDR Review - Rescind: | Not reported |
| WDR Review - No Action Required: | Not reported |
| WDR Review - Pending: | Not reported |
| WDR Review - Planned: | Not reported |
| Status Enrollee: | N |
| Individual/General: | I |
| Fee Code: | Not reported |
| Direction/Voice: | Passive |
| Enforcement Id(EID): | 247814 |
| Region: | 4 |
| Order / Resolution Number: | R4-2002-0085 |
| Enforcement Action Type: | Clean-up and Abatement Order |
| Effective Date: | 08/22/2002 |
| Adoption/Issuance Date: | Not reported |
| Achieve Date: | Not reported |
| Termination Date: | 08/22/2002 |
| ACL Issuance Date: | Not reported |
| EPL Issuance Date: | Not reported |
| Status: | Historical |
| Title: | CAO R4-2002-0085 issued 8/22/02. |
| Description: | CAO R4-2002-0085 issued 8/22/02 contains a time schedule to conduct soil & groundwater investigations & groundwater monitoring. |
| Program: | WIP |
| Latest Milestone Completion Date: | Not reported |
| # Of Programs1: | 1 |
| Total Assessment Amount: | $0.00 |
| Initial Assessed Amount: | $0.00 |
| Liability $ Amount: | $0.00 |
| Project $ Amount: | $0.00 |
| Liability $ Paid: | $0.00 |
| Project $ Completed: | $0.00 |
| Total $ Paid/Completed Amount: | $0.00 |

| | |
|---|---|
| Region: | 4 |
| Facility Id: | 249064 |
| Agency Name: | PRC-DeSoto International, Inc |
| Place Type: | Manufacturing |
| Place Subtype: | Manufacturing NEC |
| Facility Type: | Industrial |
| Agency Type: | Privately-Owned Business |
| # Of Agencies: | 1 |
| Place Latitude: | 34.1513 |
| Place Longitude: | -118.273 |
| SIC Code 1: | Not reported |
| SIC Desc 1: | Not reported |
| SIC Code 2: | Not reported |
| SIC Desc 2: | Not reported |
| SIC Code 3: | Not reported |
| SIC Desc 3: | Not reported |
| NAICS Code 1: | Not reported |
| NAICS Desc 1: | Not reported |
| NAICS Code 2: | Not reported |
| NAICS Desc 2: | Not reported |

**PRC-DESOTO INTERNATIONAL, INC. (Continued)** **S100178492**

| | |
|---|---|
| NAICS Code 3: | Not reported |
| NAICS Desc 3: | Not reported |
| # Of Places: | 1 |
| Source Of Facility: | Reg Meas |
| Design Flow: | Not reported |
| Threat To Water Quality: | Not reported |
| Complexity: | Not reported |
| Pretreatment: | Not reported |
| Facility Waste Type: | Not reported |
| Facility Waste Type 2: | Not reported |
| Facility Waste Type 3: | Not reported |
| Facility Waste Type 4: | Not reported |
| Program: | WIP |
| Program Category1: | MONITORING |
| Program Category2: | MONITORING |
| # Of Programs: | 1 |
| WDID: | 4WIP1135886 |
| Reg Measure Id: | 165866 |
| Reg Measure Type: | Unregulated |
| Region: | 4 |
| Order #: | Not reported |
| Npdes# CA#: | Not reported |
| Major-Minor: | Not reported |
| Npdes Type: | Not reported |
| Reclamation: | Not reported |
| Dredge Fill Fee: | Not reported |
| 301H: | Not reported |
| Application Fee Amt Received: | Not reported |
| Status: | Never Active |
| Status Date: | 02/20/2013 |
| Effective Date: | Not reported |
| Expiration/Review Date: | Not reported |
| Termination Date: | Not reported |
| WDR Review - Amend: | Not reported |
| WDR Review - Revise/Renew: | Not reported |
| WDR Review - Rescind: | Not reported |
| WDR Review - No Action Required: | Not reported |
| WDR Review - Pending: | Not reported |
| WDR Review - Planned: | Not reported |
| Status Enrollee: | N |
| Individual/General: | I |
| Fee Code: | Not reported |
| Direction/Voice: | Passive |
| Enforcement Id(EID): | 226404 |
| Region: | 4 |
| Order / Resolution Number: | 13267 Letter |
| Enforcement Action Type: | 13267 Letter |
| Effective Date: | 11/09/2000 |
| Adoption/Issuance Date: | Not reported |
| Achieve Date: | Not reported |
| Termination Date: | 11/09/2000 |
| ACL Issuance Date: | Not reported |
| EPL Issuance Date: | Not reported |
| Status: | Historical |
| Title: | Enforcement - 4WIP1135886 |
| Description: | Not reported |
| Program: | WIP |

**PRC-DESOTO INTERNATIONAL, INC. (Continued)** **S100178492**

| | |
|---|---|
| Latest Milestone Completion Date: | Not reported |
| # Of Programs1: | 1 |
| Total Assessment Amount: | $0.00 |
| Initial Assessed Amount: | $0.00 |
| Liability $ Amount: | $0.00 |
| Project $ Amount: | $0.00 |
| Liability $ Paid: | $0.00 |
| Project $ Completed: | $0.00 |
| Total $ Paid/Completed Amount: | $0.00 |

LOS ANGELES CO. HMS:

| | |
|---|---|
| Region: | LA |
| Permit Category: | T |
| Facility Id: | 010537-010470 |
| Facility Type: | 0 |
| Facility Status: | Removed |
| Area: | 3D |
| Permit Number: | 00001920T |
| Permit Status: | Removed |

NOTIFY 65:

| | |
|---|---|
| Date Reported: | Not reported |
| Staff Initials: | Not reported |
| Board File Number: | Not reported |
| Facility Type: | Not reported |
| Discharge Date: | Not reported |
| Issue Date: | Not reported |
| Incident Description: | Not reported |

WIP:

| | |
|---|---|
| Region: | 4 |
| File Number: | 113.5380 |
| **File Status:** | **Historical** |
| Staff: | UNIDENTIFIED |
| Facility Suite: | Not reported |

| | |
|---|---|
| Region: | 4 |
| File Number: | 113.0322 |
| **File Status:** | **Historical** |
| Staff: | UNIDENTIFIED |
| Facility Suite: | Not reported |

---

**W145** **PRODUCTS RESEARCH & CHEM CO** **LUST** **S104159997**
**SE** **5430 SAN FERNANDO RD** **SLIC** **N/A**
**1/4-1/2** **GLENDALE, CA 91203**
**0.330 mi.**
**1741 ft.** **Site 3 of 4 in cluster W**

**Relative:**
**Higher**

**Actual:**
**468 ft.**

LUST:

| | |
|---|---|
| Region: | STATE |
| Global Id: | T0603704937 |
| Latitude: | 34.1506473 |
| Longitude: | -118.273647 |
| Case Type: | LUST Cleanup Site |
| Status: | Completed - Case Closed |
| Status Date: | 07/28/2014 |

**PRODUCTS RESEARCH & CHEM CO (Continued)** **S104159997**

| | |
|---|---|
| Lead Agency: | SWRCB |
| Case Worker: | MC |
| Local Agency: | Not reported |
| RB Case Number: | R-10470 |
| LOC Case Number: | TT |
| File Location: | Not reported |
| Potential Media Affect: | Other Groundwater (uses other than drinking water) |
| Potential Contaminants of Concern: | Aviation |
| Site History: | Transferred to COURTAULDS AEROSPACE (SL603799127) . |

Click here to access the California GeoTracker records for this facility:

Contact:

| | |
|---|---|
| Global Id: | T0603704937 |
| Contact Type: | Regional Board Caseworker |
| Contact Name: | YUE RONG |
| Organization Name: | LOS ANGELES RWQCB (REGION 4) |
| Address: | 320 W. 4TH ST., SUITE 200 |
| City: | Los Angeles |
| Email: | yrong@waterboards.ca.gov |
| Phone Number: | Not reported |

| | |
|---|---|
| Global Id: | T0603704937 |
| Contact Type: | Regional Board Caseworker |
| Contact Name: | MATTHEW COHEN |
| Organization Name: | SWRCB |
| Address: | 1001 I Street |
| City: | SACRAMENTO |
| Email: | mcohen@waterboards.ca.gov |
| Phone Number: | 9163415751 |

Status History:

| | |
|---|---|
| Global Id: | T0603704937 |
| Status: | Completed - Case Closed |
| Status Date: | 07/28/2014 |

| | |
|---|---|
| Global Id: | T0603704937 |
| Status: | Open - Case Begin Date |
| Status Date: | 07/31/1996 |

| | |
|---|---|
| Global Id: | T0603704937 |
| Status: | Open - Eligible for Closure |
| Status Date: | 10/09/2013 |

| | |
|---|---|
| Global Id: | T0603704937 |
| Status: | Open - Eligible for Closure |
| Status Date: | 07/10/2014 |

| | |
|---|---|
| Global Id: | T0603704937 |
| Status: | Open - Site Assessment |
| Status Date: | 07/31/1996 |

| | |
|---|---|
| Global Id: | T0603704937 |
| Status: | Open - Site Assessment |
| Status Date: | 07/07/2014 |

**PRODUCTS RESEARCH & CHEM CO (Continued)** **S104159997**

Regulatory Activities:

| | |
|---|---|
| Global Id: | T0603704937 |
| Action Type: | ENFORCEMENT |
| Date: | 07/25/2014 |
| Action: | Staff Letter |
| Global Id: | T0603704937 |
| Action Type: | RESPONSE |
| Date: | 04/11/2013 |
| Action: | Request for Closure - Regulator Responded |
| Global Id: | T0603704937 |
| Action Type: | Other |
| Date: | 07/31/1996 |
| Action: | Leak Reported |

LUST REG 4:

| | |
|---|---|
| Region: | 4 |
| Regional Board: | 04 |
| County: | Los Angeles |
| Facility Id: | R-10470 |
| Status: | Leak being confirmed |
| Substance: | 1 |
| Substance Quantity: | Not reported |
| Local Case No: | Not reported |
| Case Type: | Groundwater |
| Abatement Method Used at the Site: | Not reported |
| Global ID: | T0603704937 |
| W Global ID: | Not reported |
| Staff: | UNK |
| Local Agency: | 19000 |
| Cross Street: | Not reported |
| Enforcement Type: | Not reported |
| Date Leak Discovered: | Not reported |
| Date Leak First Reported: | 7/31/1996 |
| Date Leak Record Entered: | 8/23/1996 |
| Date Confirmation Began: | 7/31/1996 |
| Date Leak Stopped: | Not reported |
| Date Case Last Changed on Database: | 7/31/1996 |
| Date the Case was Closed: | Not reported |
| How Leak Discovered: | Not reported |
| How Leak Stopped: | Not reported |
| Cause of Leak: | Overfill |
| Leak Source: | Not reported |
| Operator: | Not reported |
| Water System: | Not reported |
| Well Name: | Not reported |
| Approx. Dist To Production Well (ft): | 2931.16494439623788734165174 32 |
| Source of Cleanup Funding: | Not reported |
| Preliminary Site Assessment Workplan Submitted: | Not reported |
| Preliminary Site Assessment Began: | Not reported |
| Pollution Characterization Began: | Not reported |
| Remediation Plan Submitted: | Not reported |
| Remedial Action Underway: | Not reported |
| Post Remedial Action Monitoring Began: | Not reported |

**PRODUCTS RESEARCH & CHEM CO (Continued)** **S104159997**

| | |
|---|---|
| Enforcement Action Date: | Not reported |
| Historical Max MTBE Date: | Not reported |
| Hist Max MTBE Conc in Groundwater: | Not reported |
| Hist Max MTBE Conc in Soil: | Not reported |
| Significant Interim Remedial Action Taken: | Not reported |
| GW Qualifier: | Not reported |
| Soil Qualifier: | Not reported |
| Organization: | Not reported |
| Owner Contact: | Not reported |
| Responsible Party: | COORTAULDS AEROSPACE |
| RP Address: | 5430 SAN FERNANDO RD., GLENDALE CA 91203 |
| Program: | LUST |
| Lat/Long: | 34.1506473 / -1 |
| Local Agency Staff: | Not reported |
| Beneficial Use: | Not reported |
| Priority: | Not reported |
| Cleanup Fund Id: | Not reported |
| Suspended: | Not reported |
| Assigned Name: | Not reported |
| Summary: | Not reported |

SLIC:

| | |
|---|---|
| Region: | STATE |
| **Facility Status:** | **Open - Remediation** |
| Status Date: | 05/30/1997 |
| Global Id: | SL603799127 |
| Lead Agency: | LOS ANGELES RWQCB (REGION 4) |
| Lead Agency Case Number: | Not reported |
| Latitude: | 34.1511465772995 |
| Longitude: | -118.273814320564 |
| Case Type: | Cleanup Program Site |
| Case Worker: | NLA |
| Local Agency: | Not reported |
| RB Case Number: | 113.0415 |
| File Location: | Regional Board |
| Potential Media Affected: | Aquifer used for drinking water supply |
| Potential Contaminants of Concern: | Other Chlorinated Hydrocarbons, Tetrachloroethylene (PCE), Trichloroethylene (TCE), Chromium, Chromium VI, Nickel, Other Metal |
| Site History: | Site Location: Site is located at 5430 San Fernando Road, Glendale, CA, which is within the USEPA Superfund Operable Unit for Glendale South. The San Fernando Valley was declared a Superfund Site in 1986 and placed on the National Priority List (NPL) for cleanup. The Regional Board coordinates assessment and cleanup activities with USEPA. Site Status: Presently, the site has no active operations and buildings have or are being demolished. The Site's offices were moved offsite in December of 2008. Under direction of Regional Board staff, the Site has conducted periodic phases of site investigation since 1992, which have documented the release of chemicals beneath the Site. These chemicals have included volatile organic compounds (VOCs) including methyl ethyl ketone (MEK), trichloroethylene (TCE), perchloroethylene (PCE) and heavy metals, primarily chromium (Cr) and hexavalent chromium (CrVI). Groundwater monitoring has been conducted at the Site since 1994 and chemicals including trichloroethane (1,1,1-TCA), dichloroethylene (DCE), TCE, PCE, Cr, CrVI, nickel (Ni), and 1,4-Dioxane have been detected. Due to the release of these chemicals, on August 22, 2002 the Regional Board issued a Cleanup and Abatement Order (CAO) No. R4-2002-0085. Under the CAO, the Site has |

**PRODUCTS RESEARCH & CHEM CO (Continued)** **S104159997**

completed several phases of onsite assessment for soil, soil vapor and groundwater and has been conducting quarterly groundwater monitoring of both onsite and offsite groundwater monitoring wells. Because the site assessment phases are nearly complete, additional assessment work may be required as the site's building footprints are removed. Since 2004 the focus of the Site has been on remediation and a Remedial Action Plan (RAP) was submitted to the Regional Board with the RAP being revised several times. To date, the Site has performed on-site remediation for soil cleanup of VOCs and heavy metals by the excavation and removal of contaminated soil and by the installation and operation of a soil vapor extraction (SVE) system. Additional SVE maybe warranted as building footprints are removed. To deal with onsite heavy metal contamination in the soil and groundwater, on February 5, 2009, the Regional Board issued a Waste Discharge Requirements (WDR) permit No. R4-2007-0019, Series No. 60, CI No. 9415 to the Site. The WDR permit allows the Site to inject a chemical substrate (Calcium Polysulfide, corn syrup, emulsified vegetable oil, etc.) to the soil and allow the chemical substrate to percolate through the soil to the groundwater and reduce CrVI to Cr. The chemical substrate injections are ongoing. The Site also intends to complete and submit a Human Health Risk Assessment to determine whether the site cleanup of soil, soil vapor and groundwater has been achieved (acceptable risk to Human Health and the environment and the threat to groundwater quality has been minimized).

Click here to access the California GeoTracker records for this facility:

---

**W146** **PRC-DESOTO INTERNATIONAL** **SEMS** **1003073266**
**SE** **5430-5454 SAN FERNANDO RD.** **CAN000905637**
**1/4-1/2** **GLENDALE, CA 91203**
**0.330 mi.**
**1741 ft.** **Site 4 of 4 in cluster W**

**Relative:**
**Higher**

**Actual:**
**468 ft.**

SEMS:

| | |
|---|---|
| Site ID: | 905637 |
| EPA ID: | CAN000905637 |
| Federal Facility: | N |
| NPL: | Not on the NPL |
| Non NPL Status: | PA Start Needed |

**Following information was gathered from the prior CERCLIS update completed in 10/2013:**

| | |
|---|---|
| Site ID: | 0905637 |
| EPA ID: | CAN000905637 |
| Facility County: | LOS ANGELES |
| Short Name: | PRC-DESOTO INTERNATIONAL |
| Congressional District: | Not reported |
| IFMS ID: | Not reported |
| SMSA Number: | Not reported |
| USGC Hydro Unit: | Not reported |
| Federal Facility: | Not a Federal Facility |
| DMNSN Number: | 0.00000 |
| Site Orphan Flag: | Not reported |
| RCRA ID: | Not reported |
| USGS Quadrangle: | Not reported |
| Site Init By Prog: | S |
| NFRAP Flag: | Not reported |
| Parent ID: | Not reported |
| RST Code: | Not reported |

**PRC-DESOTO INTERNATIONAL (Continued)** **1003073266**

| | |
|---|---|
| EPA Region: | 09 |
| Classification: | Not reported |
| Site Settings Code: | Not reported |
| NPL Status: | Not on the NPL |
| DMNSN Unit Code: | Not reported |
| RBRAC Code: | Not reported |
| RResp Fed Agency Code: | Not reported |
| Non NPL Status: | PA Start Needed |
| Non NPL Status Date: | 04/30/07 |
| Site Fips Code: | 06037 |
| CC Concurrence Date: | / / |
| CC Concurrence FY: | Not reported |
| Alias EPA ID: | Not reported |
| Site FUDS Flag: | Not reported |

CERCLIS Site Contact Name(s):

| | |
|---|---|
| Contact ID: | 13003854.00000 |
| Contact Name: | Leslie Ramirez |
| Contact Tel: | (415) 972-3978 |
| Contact Title: | Site Assessment Manager (SAM) |
| Contact Email: | Not reported |
| | |
| Contact ID: | 13003858.00000 |
| Contact Name: | Sharon Murray |
| Contact Tel: | (415) 972-4250 |
| Contact Title: | Site Assessment Manager (SAM) |
| Contact Email: | Not reported |
| | |
| Contact ID: | 13004003.00000 |
| Contact Name: | Carl Brickner |
| Contact Tel: | Not reported |
| Contact Title: | Site Assessment Manager (SAM) |
| Contact Email: | Not reported |

CERCLIS Site Alias Name(s):

| | |
|---|---|
| Alias ID: | 101 |
| Alias Name: | CALIFORNIA ZONOLITE CO. |
| Alias Address: | 5440 SAN FERNANDO RD.<br>LOS ANGELES, CA |
| Alias ID: | 102 |
| Alias Name: | WR GRACE& CO. |
| Alias Address: | 5440 SAN FERNANDO RD<br>LOS ANGELES, CA |
| Alias Comments: | Not reported |

Site Description: 4/07

CERCLIS Assessment History:

| | |
|---|---|
| Action Code: | 001 |
| Action: | PRE-CERCLIS SCREENING |
| Date Started: | / / |
| Date Completed: | 08/02/00 |
| Priority Level: | Not reported |
| Operable Unit: | SITEWIDE |
| Primary Responsibility: | EPA Fund-Financed |
| Planning Status: | Not reported |
| Urgency Indicator: | Not reported |

**PRC-DESOTO INTERNATIONAL (Continued)** **1003073266**

| | |
|---|---|
| Action Anomaly: | Not reported |

| | |
|---|---|
| Action Code: | 001 |
| Action: | DISCOVERY |
| Date Started: | / / |
| Date Completed: | 08/02/00 |
| Priority Level: | Not reported |
| Operable Unit: | SITEWIDE |
| Primary Responsibility: | EPA Fund-Financed |
| Planning Status: | Not reported |
| Urgency Indicator: | Not reported |
| Action Anomaly: | Not reported |

---

**147**
**NW**
**1/4-1/2**
**0.331 mi.**
**1748 ft.**

**WALT DISNEY COMPANY**
**1100 GRAND CENTRAL AVE**
**GLENDALE, CA 91201**

**SLIC** **S103966533**
**WIP** **N/A**

**Relative:**
**Lower**

**Actual:**
**467 ft.**

SLIC:

| | |
|---|---|
| Region: | STATE |
| **Facility Status:** | **Completed - Case Closed** |
| Status Date: | 03/02/2015 |
| Global Id: | SL603798948 |
| Lead Agency: | LOS ANGELES RWQCB (REGION 4) |
| Lead Agency Case Number: | Not reported |
| Latitude: | 34.1709199705969 |
| Longitude: | -118.249984295354 |
| Case Type: | Cleanup Program Site |
| Case Worker: | GJH |
| Local Agency: | Not reported |
| RB Case Number: | 109.0750 |
| File Location: | Not reported |
| Potential Media Affected: | Aquifer used for drinking water supply |
| Potential Contaminants of Concern: | Not reported |
| Site History: | Not reported |

Click here to access the California GeoTracker records for this facility:

WIP:

| | |
|---|---|
| Region: | 4 |
| File Number: | 109.0750 |
| **File Status:** | **Backlog** |
| Staff: | UNIDENTIFIED |
| Facility Suite: | Not reported |

**X148 NNE 1/4-1/2 0.337 mi. 1780 ft.** | **MOBIL #18-GGL**
**900 GLENOAKS BLVD W**
**GLENDALE, CA 91202** | **LUST** | **S104406365**
**N/A**

**Site 1 of 2 in cluster X**

**Relative: Higher**

**Actual: 484 ft.**

LUST:

| | |
|---|---|
| Region: | STATE |
| Global Id: | T0603702039 |
| Latitude: | 34.1606299 |
| Longitude: | -118.2750641 |
| Case Type: | LUST Cleanup Site |
| Status: | Completed - Case Closed |
| Status Date: | 06/11/2009 |
| Lead Agency: | LOS ANGELES RWQCB (REGION 4) |
| Case Worker: | JW |
| Local Agency: | GLENDALE, CITY OF |
| RB Case Number: | 912020025 |
| LOC Case Number: | Not reported |
| File Location: | Regional Board |
| Potential Media Affect: | Aquifer used for drinking water supply |
| Potential Contaminants of Concern: | Gasoline |
| Site History: | Not reported |

Click here to access the California GeoTracker records for this facility:

Contact:

| | |
|---|---|
| Global Id: | T0603702039 |
| Contact Type: | Local Agency Caseworker |
| Contact Name: | UNK |
| Organization Name: | GLENDALE, CITY OF |
| Address: | Not reported |
| City: | r4 UNKNOWN |
| Email: | Not reported |
| Phone Number: | Not reported |

| | |
|---|---|
| Global Id: | T0603702039 |
| Contact Type: | Regional Board Caseworker |
| Contact Name: | JIMMIE WOO |
| Organization Name: | LOS ANGELES RWQCB (REGION 4) |
| Address: | 320 WEST 4TH STREET, SUITE 200 |
| City: | LOS ANGELES |
| Email: | jwoo@waterboards.ca.gov |
| Phone Number: | 2135766600 |

Status History:

| | |
|---|---|
| Global Id: | T0603702039 |
| Status: | Completed - Case Closed |
| Status Date: | 06/11/2009 |

| | |
|---|---|
| Global Id: | T0603702039 |
| Status: | Open - Case Begin Date |
| Status Date: | 08/25/1987 |

| | |
|---|---|
| Global Id: | T0603702039 |
| Status: | Open - Remediation |
| Status Date: | 05/10/2002 |

| | |
|---|---|
| Global Id: | T0603702039 |

**MOBIL #18-GGL (Continued)** **S104406365**

Status: Open - Remediation
Status Date: 11/07/2005

Global Id: T0603702039
Status: Open - Remediation
Status Date: 11/10/2005

Global Id: T0603702039
Status: Open - Remediation
Status Date: 01/31/2006

Global Id: T0603702039
Status: Open - Remediation
Status Date: 07/07/2006

Global Id: T0603702039
Status: Open - Site Assessment
Status Date: 09/18/1997

Global Id: T0603702039
Status: Open - Site Assessment
Status Date: 04/05/2001

Global Id: T0603702039
Status: Open - Site Assessment
Status Date: 04/08/2004

Global Id: T0603702039
Status: Open - Verification Monitoring
Status Date: 09/01/1987

Regulatory Activities:
Global Id: T0603702039
Action Type: Other
Date: 08/25/1987
Action: Leak Discovery

Global Id: T0603702039
Action Type: Other
Date: 09/01/1987
Action: Leak Reported

Global Id: T0603702039
Action Type: RESPONSE
Date: 08/25/2008
Action: Soil and Water Investigation Workplan

Global Id: T0603702039
Action Type: RESPONSE
Date: 11/14/2008
Action: Soil and Water Investigation Report

Global Id: T0603702039
Action Type: RESPONSE
Date: 10/15/2003
Action: Monitoring Report - Quarterly

**MOBIL #18-GGL (Continued)** **S104406365**

Global Id: T0603702039
Action Type: RESPONSE
Date: 01/15/2004
Action: Monitoring Report - Quarterly

Global Id: T0603702039
Action Type: RESPONSE
Date: 11/14/2003
Action: Soil and Water Investigation Report

Global Id: T0603702039
Action Type: RESPONSE
Date: 10/15/2003
Action: Soil and Water Investigation Workplan

Global Id: T0603702039
Action Type: RESPONSE
Date: 04/15/2004
Action: Monitoring Report - Quarterly

Global Id: T0603702039
Action Type: RESPONSE
Date: 07/15/2004
Action: Monitoring Report - Quarterly

Global Id: T0603702039
Action Type: RESPONSE
Date: 10/15/2005
Action: CAP/RAP - Final Remediation / Design Plan

Global Id: T0603702039
Action Type: RESPONSE
Date: 01/15/2005
Action: Soil and Water Investigation Report

Global Id: T0603702039
Action Type: RESPONSE
Date: 10/15/2004
Action: Monitoring Report - Quarterly

Global Id: T0603702039
Action Type: RESPONSE
Date: 01/15/2005
Action: Monitoring Report - Quarterly

Global Id: T0603702039
Action Type: RESPONSE
Date: 04/15/2005
Action: Monitoring Report - Quarterly

Global Id: T0603702039
Action Type: ENFORCEMENT
Date: 09/26/2008
Action: Staff Letter

Global Id: T0603702039
Action Type: RESPONSE

**MOBIL #18-GGL (Continued)** **S104406365**

Date: 01/15/2006
Action: Monitoring Report - Quarterly

Global Id: T0603702039
Action Type: RESPONSE
Date: 01/31/2006
Action: CAP/RAP - Final Remediation / Design Plan

Global Id: T0603702039
Action Type: RESPONSE
Date: 10/15/2006
Action: Monitoring Report - Quarterly

Global Id: T0603702039
Action Type: ENFORCEMENT
Date: 05/26/2005
Action: Staff Letter

Global Id: T0603702039
Action Type: RESPONSE
Date: 01/15/2009
Action: Monitoring Report - Quarterly

Global Id: T0603702039
Action Type: RESPONSE
Date: 07/15/2006
Action: Monitoring Report - Quarterly

Global Id: T0603702039
Action Type: REMEDIATION
Date: 06/01/2006
Action: Soil Vapor Extraction (SVE)

Global Id: T0603702039
Action Type: RESPONSE
Date: 10/15/2005
Action: Monitoring Report - Quarterly

Global Id: T0603702039
Action Type: RESPONSE
Date: 04/15/2006
Action: Monitoring Report - Quarterly

Global Id: T0603702039
Action Type: RESPONSE
Date: 01/15/2007
Action: Monitoring Report - Quarterly

Global Id: T0603702039
Action Type: ENFORCEMENT
Date: 04/05/2001
Action: 13267 Requirement

Global Id: T0603702039
Action Type: ENFORCEMENT
Date: 04/24/2006
Action: Staff Letter

**MOBIL #18-GGL (Continued)** **S104406365**

Global Id: T0603702039
Action Type: ENFORCEMENT
Date: 12/22/2005
Action: Staff Letter

Global Id: T0603702039
Action Type: RESPONSE
Date: 04/15/2002
Action: Monitoring Report - Quarterly

Global Id: T0603702039
Action Type: RESPONSE
Date: 07/15/2002
Action: Monitoring Report - Quarterly

Global Id: T0603702039
Action Type: RESPONSE
Date: 04/15/2002
Action: Remedial Progress Report

Global Id: T0603702039
Action Type: RESPONSE
Date: 01/15/2003
Action: Monitoring Report - Quarterly

Global Id: T0603702039
Action Type: RESPONSE
Date: 04/15/2003
Action: Monitoring Report - Quarterly

Global Id: T0603702039
Action Type: RESPONSE
Date: 10/15/2002
Action: Monitoring Report - Quarterly

Global Id: T0603702039
Action Type: REMEDIATION
Date: 03/01/2000
Action: In Situ Physical/Chemical Treatment (other than SVE)

Global Id: T0603702039
Action Type: RESPONSE
Date: 04/15/2007
Action: Monitoring Report - Quarterly

Global Id: T0603702039
Action Type: Other
Date: 08/25/1987
Action: Leak Stopped

Global Id: T0603702039
Action Type: RESPONSE
Date: 07/15/2008
Action: Monitoring Report - Quarterly

Global Id: T0603702039
Action Type: RESPONSE

**MOBIL #18-GGL (Continued)** **S104406365**

Date: 10/15/2008
Action: Monitoring Report - Quarterly

Global Id: T0603702039
Action Type: ENFORCEMENT
Date: 06/11/2009
Action: Closure/No Further Action Letter

Global Id: T0603702039
Action Type: ENFORCEMENT
Date: 05/12/2009
Action: Notification - Preclosure

Global Id: T0603702039
Action Type: RESPONSE
Date: 07/15/2003
Action: Monitoring Report - Quarterly

Global Id: T0603702039
Action Type: RESPONSE
Date: 10/15/2007
Action: Monitoring Report - Quarterly

Global Id: T0603702039
Action Type: ENFORCEMENT
Date: 10/05/2004
Action: Staff Letter

Global Id: T0603702039
Action Type: ENFORCEMENT
Date: 08/29/2003
Action: Staff Letter

Global Id: T0603702039
Action Type: RESPONSE
Date: 04/15/2009
Action: Monitoring Report - Quarterly

Global Id: T0603702039
Action Type: RESPONSE
Date: 07/15/2005
Action: Monitoring Report - Quarterly

Global Id: T0603702039
Action Type: RESPONSE
Date: 10/15/2005
Action: CAP/RAP - Final Remediation / Design Plan

Global Id: T0603702039
Action Type: ENFORCEMENT
Date: 03/20/2009
Action: Site Visit / Inspection / Sampling

Global Id: T0603702039
Action Type: RESPONSE
Date: 07/15/2007
Action: Monitoring Report - Quarterly

**MOBIL #18-GGL (Continued)** **S104406365**

| | |
|---|---|
| Global Id: | T0603702039 |
| Action Type: | RESPONSE |
| Date: | 04/15/2008 |
| Action: | Monitoring Report - Quarterly |

| | |
|---|---|
| Global Id: | T0603702039 |
| Action Type: | RESPONSE |
| Date: | 10/15/2003 |
| Action: | Monitoring Report - Quarterly |

| | |
|---|---|
| Global Id: | T0603702039 |
| Action Type: | RESPONSE |
| Date: | 01/15/2008 |
| Action: | Monitoring Report - Quarterly |

LUST REG 4:

| | |
|---|---|
| Region: | 4 |
| Regional Board: | 04 |
| County: | Los Angeles |
| Facility Id: | 912020025 |
| Status: | Pollution Characterization |
| Substance: | Gasoline |
| Substance Quantity: | Not reported |
| Local Case No: | Not reported |
| Case Type: | Groundwater |
| Abatement Method Used at the Site: | Excavate and Dispose |
| Global ID: | T0603702039 |
| W Global ID: | Not reported |
| Staff: | JW |
| Local Agency: | 19070 |
| Cross Street: | HIGHLAND |
| Enforcement Type: | DLLET |
| Date Leak Discovered: | 8/25/1987 |
| Date Leak First Reported: | 9/1/1987 |
| Date Leak Record Entered: | 11/2/1987 |
| Date Confirmation Began: | Not reported |
| Date Leak Stopped: | 8/25/1987 |
| Date Case Last Changed on Database: | 7/15/2002 |
| Date the Case was Closed: | Not reported |
| How Leak Discovered: | Tank Closure |
| How Leak Stopped: | Not reported |
| Cause of Leak: | UNK |
| Leak Source: | UNK |
| Operator: | KELEDJIAN, KRIKOR |
| Water System: | Not reported |
| Well Name: | Not reported |
| Approx. Dist To Production Well (ft): | 2517.05798149599064425504766 42 |
| Source of Cleanup Funding: | UNK |
| Preliminary Site Assessment Workplan Submitted: | 9/18/1997 |
| Preliminary Site Assessment Began: | 9/18/1997 |
| Pollution Characterization Began: | 4/8/2004 |
| Remediation Plan Submitted: | Not reported |
| Remedial Action Underway: | 5/10/2002 |
| Post Remedial Action Monitoring Began: | 9/1/1987 |
| Enforcement Action Date: | 4/5/2001 |
| Historical Max MTBE Date: | 9/19/2000 |

**MOBIL #18-GGL (Continued)** **S104406365**

| | |
|---|---|
| Hist Max MTBE Conc in Groundwater: | 130000 |
| Hist Max MTBE Conc in Soil: | 100 |
| Significant Interim Remedial Action Taken: | Not reported |
| GW Qualifier: | Not reported |
| Soil Qualifier: | Not reported |
| Organization: | Not reported |
| Owner Contact: | Not reported |
| Responsible Party: | JOHNNY MEDRANO |
| RP Address: | 3700 W. 190TH ST. TPT-2 |
| Program: | LUST |
| Lat/Long: | 34.1606299 / -1 |
| Local Agency Staff: | UNK |
| Beneficial Use: | Not reported |
| Priority: | Not reported |
| Cleanup Fund Id: | Not reported |
| Suspended: | Not reported |
| Assigned Name: | Not reported |
| Summary: | TANKS 2,3, AND 4 ARE 4000, 6000, AND 8000 GALS AT 31, 31, 15 YEARS, NEED TO REVIEW WP, RP WILL IMPLEMENT 60 DAY RULE.; 1/23/01 4TH QTR GW MON RPT 2000; 2/8/01 SUPPLEM SITE ASSESSMENT RPT;3/1/01 1ST QMR 2001; 4/6/01 GW PUMPING |

---

**X149**
**NNE**
**1/4-1/2**
**0.337 mi.**
**1780 ft.**

**MOBIL #18-GGL** **HIST CORTESE** **S102433569**
**900 GLENOAKS** **N/A**
**GLENDALE, CA 91202**

**Site 2 of 2 in cluster X**

**Relative:**
**Higher**

**Actual:**
**484 ft.**

HIST CORTESE:

| | |
|---|---|
| Region: | CORTESE |
| Facility County Code: | 19 |
| Reg By: | LTNKA |
| Reg Id: | 912020025 |

---

**150**
**NNW**
**1/4-1/2**
**0.366 mi.**
**1930 ft.**

**SEPULVEDA ANG - SEPULVEDA ANG** **LUST** **S106517225**
**MCS** **N/A**

**SEPULVEDA, CA**

**Relative:**
**Higher**

**Actual:**
**472 ft.**

LUST REG 4:

| | |
|---|---|
| Region: | 4 |
| Regional Board: | 04 |
| County: | Los Angeles |
| Facility Id: | Not reported |
| Status: | Remedial action (cleanup) Underway |
| Substance: | Not reported |
| Substance Quantity: | Not reported |
| Local Case No: | 300307 |
| Case Type: | Not reported |
| Abatement Method Used at the Site: | Not reported |
| Global ID: | T0603743904 |
| W Global ID: | Not reported |
| Staff: | SSH |
| Local Agency: | Not reported |
| Cross Street: | Not reported |

**SEPULVEDA ANG - SEPULVEDA ANG (Continued)** **S106517225**

| | | |
|---|---|---|
| Enforcement Type: | Not reported | |
| Date Leak Discovered: | Not reported | |
| Date Leak First Reported: | | Not reported |
| Date Leak Record Entered: | Not reported | |
| Date Confirmation Began: | Not reported | |
| Date Leak Stopped: | Not reported | |
| Date Case Last Changed on Database: | | Not reported |
| Date the Case was Closed: | | Not reported |
| How Leak Discovered: | Not reported | |
| How Leak Stopped: | Not reported | |
| Cause of Leak: | Not reported | |
| Leak Source: | Not reported | |
| Operator: | Not reported | |
| Water System: | Not reported | |
| Well Name: | Not reported | |
| Approx. Dist To Production Well (ft): | | Not reported |
| Source of Cleanup Funding: | | Not reported |
| Preliminary Site Assessment Workplan Submitted: | | Not reported |
| Preliminary Site Assessment Began: | | Not reported |
| Pollution Characterization Began: | | Not reported |
| Remediation Plan Submitted: | | Not reported |
| Remedial Action Underway: | | 6/30/2002 |
| Post Remedial Action Monitoring Began: | | Not reported |
| Enforcement Action Date: | | Not reported |
| Historical Max MTBE Date: | | Not reported |
| Hist Max MTBE Conc in Groundwater: | | Not reported |
| Hist Max MTBE Conc in Soil: | | Not reported |
| Significant Interim Remedial Action Taken: | | Not reported |
| GW Qualifier: | Not reported | |
| Soil Qualifier: | Not reported | |
| Organization: | Not reported | |
| Owner Contact: | Not reported | |
| Responsible Party: | Winston Crow | |
| RP Address: | Not reported | |
| Program: | DOD | |
| Lat/Long: | Not reported | |
| Local Agency Staff: | Not reported | |
| Beneficial Use: | Not reported | |
| Priority: | Not reported | |
| Cleanup Fund Id: | Not reported | |
| Suspended: | Not reported | |
| Assigned Name: | Not reported | |
| Summary: | Not reported | |

MCS:

| | |
|---|---|
| Global Id: | T0603743904 |
| Latitude: | 34.16167 |
| Longitude: | -118.2828 |
| Case Type: | Military Cleanup Site |
| Status: | Open - Remediation |
| Status Date: | 06/30/2002 |
| Lead Agency: | DEPARTMENT OF TOXIC SUBSTANCES CONTROL |
| Caseworker: | Not reported |
| Local Agency: | DEPARTMENT OF TOXIC SUBSTANCES CONTROL |
| RB Case Number: | Not reported |
| LOC Case Number: | 19970013 |
| File Location: | Not reported |

**SEPULVEDA ANG - SEPULVEDA ANG (Continued)** **S106517225**

Potential Media Affect: Not reported
EDR Link ID: T0603743904
Potential Contaminants of Concern: Not reported
Site History: Not reported

Click here to access the California GeoTracker records for this facility:

---

**Y151** **PACER** **SLIC** **S106484904**
**SSE** **5341 W. SAN FERNANDO RD.** **N/A**
**1/4-1/2** **LOS ANGELES, CA 90039**
**0.379 mi.**
**2002 ft.** **Site 1 of 2 in cluster Y**

**Relative:**
**Lower**

**Actual:**
**462 ft.**

SLIC:
Region: STATE
**Facility Status:** **Completed - Case Closed**
Status Date: 09/16/2005
Global Id: SL603799124
Lead Agency: LOS ANGELES RWQCB (REGION 4)
Lead Agency Case Number: Not reported
Latitude: 34.1491209
Longitude: -118.2736025
Case Type: Cleanup Program Site
Case Worker: Not reported
Local Agency: Not reported
RB Case Number: 113.5455
File Location: Not reported
Potential Media Affected: Aquifer used for drinking water supply
Potential Contaminants of Concern: Not reported
Site History: Not reported

Click here to access the California GeoTracker records for this facility:

---

**Y152** **ADMIRAL CONTROLS INC** **SEMS-ARCHIVE** **1000261112**
**SSE** **4516 CUTTER ST** **RCRA NonGen / NLR** **CAD008321416**
**1/4-1/2** **LOS ANGELES, CA 90039** **FINDS**
**0.390 mi.** **WIP**
**2060 ft.** **Site 2 of 2 in cluster Y** **ECHO**

**Relative:**
**Lower**

**Actual:**
**460 ft.**

SEMS-ARCHIVE:
Site ID: 901047
EPA ID: CAD008321416
Federal Facility: N
NPL: Not on the NPL
Non NPL Status: NFRAP-Site does not qualify for the NPL based on existing information

**Following information was gathered from the prior CERCLIS update completed in 10/2013:**
Site ID: 0901047
Federal Facility: Not a Federal Facility
NPL Status: Not on the NPL
Non NPL Status: NFRAP-Site does not qualify for the NPL based on existing information

CERCLIS-NFRAP Site Contact Details:
Contact Sequence ID: 13286679.00000
Person ID: 13003854.00000

**ADMIRAL CONTROLS INC (Continued)** **1000261112**

Contact Sequence ID: 13292274.00000
Person ID: 13003858.00000

Contact Sequence ID: 13298132.00000
Person ID: 13004003.00000

CERCLIS-NFRAP Assessment History:
Action: PRELIMINARY ASSESSMENT
Date Started: 08/01/85
Date Completed: 02/01/86
Priority Level: NFRAP-Site does not qualify for the NPL based on existing information

Action: ARCHIVE SITE
Date Started: / /
Date Completed: 02/01/86
Priority Level: Not reported

Action: DISCOVERY
Date Started: / /
Date Completed: 09/01/85
Priority Level: Not reported

RCRA NonGen / NLR:
Date form received by agency: 06/16/2006
Facility name: ADMIRAL CONTROLS INC
Facility address: 4516 CUTTER ST
LOS ANGELES, CA 90039
EPA ID: CAD008321416
Mailing address: 275 W KENNETH RD
GLENDALE, CA 91202
Contact: DAVID J HIGGINS
Contact address: 275 W KENNETH RD
GLENDALE, CA 91202
Contact country: US
Contact telephone: 818-247-6958
Contact email: Not reported
EPA Region: 09
Classification: Non-Generator
Description: Handler: Non-Generators do not presently generate hazardous waste

Owner/Operator Summary:
Owner/operator name: NOT REQUIRED
Owner/operator address: NOT REQUIRED
NOT REQUIRED, ME 99999
Owner/operator country: Not reported
Owner/operator telephone: (415) 555-1212
Legal status: Private
Owner/Operator Type: Operator
Owner/Op start date: Not reported
Owner/Op end date: Not reported

Handler Activities Summary:
U.S. importer of hazardous waste: No
Mixed waste (haz. and radioactive): No
Recycler of hazardous waste: No

**ADMIRAL CONTROLS INC (Continued)** **1000261112**

| | |
|---|---|
| Transporter of hazardous waste: | No |
| Treater, storer or disposer of HW: | No |
| Underground injection activity: | No |
| On-site burner exemption: | No |
| Furnace exemption: | No |
| Used oil fuel burner: | No |
| Used oil processor: | No |
| User oil refiner: | No |
| Used oil fuel marketer to burner: | No |
| Used oil Specification marketer: | No |
| Used oil transfer facility: | No |
| Used oil transporter: | No |

Historical Generators:

| | |
|---|---|
| Date form received by agency: | 09/01/1996 |
| Site name: | ADMIRAL CONTROLS INC |
| Classification: | Small Quantity Generator |
| Date form received by agency: | 07/11/1980 |
| Site name: | ADMIRAL CONTROLS INC |
| Classification: | Large Quantity Generator |
| Violation Status: | No violations found |

FINDS:

Registry ID: 110002632438

Environmental Interest/Information System

California Hazardous Waste Tracking System - Datamart (HWTS-DATAMART) provides California with information on hazardous waste shipments for generators, transporters, and treatment, storage, and disposal facilities.

RCRAInfo is a national information system that supports the Resource Conservation and Recovery Act (RCRA) program through the tracking of events and activities related to facilities that generate, transport, and treat, store, or dispose of hazardous waste. RCRAInfo allows RCRA program staff to track the notification, permit, compliance, and corrective action activities required under RCRA.

WIP:

| | |
|---|---|
| Region: | 4 |
| File Number: | 113.0384 |
| **File Status:** | **Historical** |
| Staff: | AZASZKOD |
| Facility Suite: | Not reported |

ECHO:

| | |
|---|---|
| Envid: | 1000261112 |
| Registry ID: | 110002632438 |
| DFR URL: | http://echo.epa.gov/detailed_facility_report?fid=110002632438 |

**153 NW 1/4-1/2 0.392 mi. 2068 ft.** | **GRAND CENTRAL AIRPORT**
**1101 AIR WAY**
**GLENDALE, CA 91201** | **SWF/LF** | **S111075928**
**N/A**

**Relative: Higher**

**Actual: 472 ft.**

LOS ANGELES CO. LF:

| | |
|---|---|
| Site ID: | 1951 |
| Alt. Address: | 1111 Air Way, Glendale, CA 91201 |
| Site Contact: | Not reported |
| Site Contact Phone: | Not reported |
| Site Email: | Not reported |
| Site Website: | Not reported |
| Site Type: | Unknown |
| Site SWIS Number: | 19-AA-5354 |
| Beginning Operation Date: | Not reported |
| Ending Operation Date: | 1959 |
| Local Enforcement Agency: | Not reported |
| Maximun Depth Fill(Ft): | Not reported |
| Permitted Capacity: | Not reported |
| Present Use: | Commercial |
| Remaining Capacity(Million): | Not reported |
| Status: | Closed |
| Waste Accepted: | Not reported |
| Hours of Operation: | Not reported |
| Disposal Area (Acre): | Not reported |

Detail As Of 01/2014:

| | |
|---|---|
| Operator Name: | Unknown |
| Operator Address: | Not reported |
| Operator City/State/Zip: | Not reported |
| Operator Contact: | Not reported |
| Operator Telephone: | Not reported |
| Operator Email: | Not reported |
| Owner Name: | Prudential Insurance Company |
| Owner Address: | 2029 CENTURY PARK EAST SUIT 3600 |
| Owner City/State/Zip: | LOS ANGELES, CA |
| Owner Contact: | Not reported |
| Owner Telephone: | Not reported |
| Owner Email: | Not reported |

---

**Z154 WNW 1/4-1/2 0.407 mi. 2147 ft.** | **GLENDALE FEDERAL BANK**
**1100 FRANCES CT.**
**GLENDALE, CA 91201** | **SLIC**
**WIP** | **S103622596**
**N/A**

**Site 1 of 2 in cluster Z**

**Relative: Lower**

**Actual: 465 ft.**

SLIC:

| | |
|---|---|
| Region: | STATE |
| **Facility Status:** | **Completed - Case Closed** |
| Status Date: | 03/04/2015 |
| Global Id: | SL603798946 |
| Lead Agency: | LOS ANGELES RWQCB (REGION 4) |
| Lead Agency Case Number: | Not reported |
| Latitude: | 34.1709199705969 |
| Longitude: | -118.249984295354 |
| Case Type: | Cleanup Program Site |
| Case Worker: | GJH |
| Local Agency: | Not reported |
| RB Case Number: | 109.0696 |

**GLENDALE FEDERAL BANK (Continued)** **S103622596**

File Location: Not reported
Potential Media Affected: Aquifer used for drinking water supply
Potential Contaminants of Concern: Not reported
Site History: Not reported

Click here to access the California GeoTracker records for this facility:

WIP:
Region: 4
File Number: 109.0696
**File Status: Backlog**
Staff: UNIDENTIFIED
Facility Suite: Not reported

---

**Z155 WNW 1/4-1/2 0.443 mi. 2341 ft.**
**Relative: Lower**
**Actual: 466 ft.**

**APPLIED GRAPHICS**
**601 RODIER DR**
**GLENDALE, CA 91201**

**Site 2 of 2 in cluster Z**

**SLIC** **1000820102**
**RCRA NonGen / NLR** **CAD983661265**
**FINDS**
**EMI**
**HAZNET**
**WIP**
**ECHO**

SLIC:
Region: STATE
**Facility Status: Completed - Case Closed**
Status Date: 12/22/2014
Global Id: SL603798945
Lead Agency: LOS ANGELES RWQCB (REGION 4)
Lead Agency Case Number: Not reported
Latitude: 34.158487
Longitude: -118.286888
Case Type: Cleanup Program Site
Case Worker: GJH
Local Agency: Not reported
RB Case Number: 109.0694
File Location: Not reported
Potential Media Affected: Aquifer used for drinking water supply
Potential Contaminants of Concern: Not reported
Site History: Not reported

Click here to access the California GeoTracker records for this facility:

RCRA NonGen / NLR:
Date form received by agency: 11/16/1995
Facility name: APPLIED GRAPHICS
Facility address: 601 RODIER DR
GLENDALE, CA 91201
EPA ID: CAD983661265
Contact: AMIE SPRINGMAN
Contact address: 601 RODIER DR
GLENDALE, CA 91201
Contact country: US
Contact telephone: (213) 245-4111
Contact email: Not reported
EPA Region: 09
Classification: Non-Generator
Description: Handler: Non-Generators do not presently generate hazardous waste

**APPLIED GRAPHICS (Continued)** **1000820102**

Owner/Operator Summary:

| | |
|---|---|
| Owner/operator name: | APPLIED GRAPHICS CORP |
| Owner/operator address: | 601 RODIER DR<br>GLENDALE, CA 91201 |
| Owner/operator country: | Not reported |
| Owner/operator telephone: | (213) 245-4111 |
| Legal status: | Private |
| Owner/Operator Type: | Owner |
| Owner/Op start date: | Not reported |
| Owner/Op end date: | Not reported |

Handler Activities Summary:

| | |
|---|---|
| U.S. importer of hazardous waste: | No |
| Mixed waste (haz. and radioactive): | No |
| Recycler of hazardous waste: | No |
| Transporter of hazardous waste: | No |
| Treater, storer or disposer of HW: | No |
| Underground injection activity: | No |
| On-site burner exemption: | No |
| Furnace exemption: | No |
| Used oil fuel burner: | No |
| Used oil processor: | No |
| User oil refiner: | No |
| Used oil fuel marketer to burner: | No |
| Used oil Specification marketer: | No |
| Used oil transfer facility: | No |
| Used oil transporter: | No |

Violation Status: No violations found

FINDS:

Registry ID: 110002894020

Environmental Interest/Information System

RCRAInfo is a national information system that supports the Resource Conservation and Recovery Act (RCRA) program through the tracking of events and activities related to facilities that generate, transport, and treat, store, or dispose of hazardous waste. RCRAInfo allows RCRA program staff to track the notification, permit, compliance, and corrective action activities required under RCRA.

EMI:

| | |
|---|---|
| Year: | 1993 |
| County Code: | 19 |
| Air Basin: | SC |
| Facility ID: | 74197 |
| Air District Name: | SC |
| SIC Code: | 2759 |
| Air District Name: | SOUTH COAST AQMD |
| Community Health Air Pollution Info System: | Not reported |
| Consolidated Emission Reporting Rule: | Not reported |
| Total Organic Hydrocarbon Gases Tons/Yr: | 13 |
| Reactive Organic Gases Tons/Yr: | 13 |
| Carbon Monoxide Emissions Tons/Yr: | 0 |

**APPLIED GRAPHICS (Continued)** **1000820102**

| | |
|---|---|
| NOX - Oxides of Nitrogen Tons/Yr: | 0 |
| SOX - Oxides of Sulphur Tons/Yr: | 0 |
| Particulate Matter Tons/Yr: | 0 |
| Part. Matter 10 Micrometers and Smllr Tons/Yr: | 0 |

| | |
|---|---|
| Year: | 1995 |
| County Code: | 19 |
| Air Basin: | SC |
| Facility ID: | 74197 |
| Air District Name: | SC |
| SIC Code: | 2759 |
| Air District Name: | SOUTH COAST AQMD |
| Community Health Air Pollution Info System: | Not reported |
| Consolidated Emission Reporting Rule: | Not reported |
| Total Organic Hydrocarbon Gases Tons/Yr: | 13 |
| Reactive Organic Gases Tons/Yr: | 13 |
| Carbon Monoxide Emissions Tons/Yr: | 0 |
| NOX - Oxides of Nitrogen Tons/Yr: | 0 |
| SOX - Oxides of Sulphur Tons/Yr: | 0 |
| Particulate Matter Tons/Yr: | 0 |
| Part. Matter 10 Micrometers and Smllr Tons/Yr: | 0 |

HAZNET:

| | |
|---|---|
| envid: | 1000820102 |
| Year: | 1995 |
| GEPAID: | CAD983661265 |
| Contact: | APPLIED GRAPHICS CORP |
| Telephone: | 2132454111 |
| Mailing Name: | Not reported |
| Mailing Address: | 601 RODIER DR |
| Mailing City,St,Zip: | GLENDALE, CA 912010000 |
| Gen County: | Not reported |
| TSD EPA ID: | CAD981402522 |
| TSD County: | Not reported |
| Waste Category: | Photochemicals/photoprocessing waste |
| Disposal Method: | Recycler |
| Tons: | .2433 |
| Cat Decode: | Photochemicals/photoprocessing waste |
| Method Decode: | Recycler |
| Facility County: | Los Angeles |

| | |
|---|---|
| envid: | 1000820102 |
| Year: | 1994 |
| GEPAID: | CAD983661265 |
| Contact: | APPLIED GRAPHICS CORP |
| Telephone: | 2132454111 |
| Mailing Name: | Not reported |
| Mailing Address: | 601 RODIER DR |
| Mailing City,St,Zip: | GLENDALE, CA 912010000 |
| Gen County: | Not reported |
| TSD EPA ID: | CAD981402522 |
| TSD County: | Not reported |
| Waste Category: | Photochemicals/photoprocessing waste |
| Disposal Method: | Recycler |
| Tons: | .5818 |
| Cat Decode: | Photochemicals/photoprocessing waste |
| Method Decode: | Recycler |

**APPLIED GRAPHICS (Continued)** **1000820102**

Facility County: Los Angeles

envid: 1000820102
Year: 1993
GEPAID: CAD983661265
Contact: APPLIED GRAPHICS CORP
Telephone: 2132454111
Mailing Name: Not reported
Mailing Address: 601 RODIER DR
Mailing City,St,Zip: GLENDALE, CA 912010000
Gen County: Not reported
TSD EPA ID: CAD981402522
TSD County: Not reported
Waste Category: Photochemicals/photoprocessing waste
Disposal Method: Recycler
Tons: 0.31630000000
Cat Decode: Photochemicals/photoprocessing waste
Method Decode: Recycler
Facility County: Los Angeles

WIP:
Region: 4
File Number: 109.0694
**File Status: Backlog**
Staff: UNIDENTIFIED
Facility Suite: Not reported

ECHO:
Envid: 1000820102
Registry ID: 110002894020
DFR URL: http://echo.epa.gov/detailed_facility_report?fid=110002894020

---

**156 SSE 1/4-1/2 0.450 mi. 2376 ft.** | **M&T CHEM/FURANE PROD** | **SEMS-ARCHIVE** | **1003878779**
**4600 SPERRY ST** | **CAD980889117**
**LOS ANGELES, CA 90039**

**Relative: Lower**

**Actual: 451 ft.**

SEMS-ARCHIVE:
Site ID: 902207
EPA ID: CAD980889117
Federal Facility: N
NPL: Not on the NPL
Non NPL Status: NFRAP-Site does not qualify for the NPL based on existing information

**Following information was gathered from the prior CERCLIS update completed in 10/2013:**
Site ID: 0902207
Federal Facility: Not a Federal Facility
NPL Status: Not on the NPL
Non NPL Status: NFRAP-Site does not qualify for the NPL based on existing information

CERCLIS-NFRAP Site Contact Details:
Contact Sequence ID: 13286393.00000
Person ID: 13003854.00000

Contact Sequence ID: 13291988.00000

**M&T CHEM/FURANE PROD (Continued)** **1003878779**

Person ID: 13003858.00000

Contact Sequence ID: 13297846.00000
Person ID: 13004003.00000

CERCLIS-NFRAP Site Alias Name(s):
Alias Name: ROHN & HASS (CURRENT OWNER)
Alias Address: Not reported
CA

Alias Name: FURANE PLASTICS (OPERATOR)
Alias Address: Not reported
CA

CERCLIS-NFRAP Assessment History:
Action: PRELIMINARY ASSESSMENT
Date Started: 08/01/85
Date Completed: 02/01/86
Priority Level: NFRAP-Site does not qualify for the NPL based on existing information

Action: ARCHIVE SITE
Date Started: / /
Date Completed: 02/01/86
Priority Level: Not reported

Action: DISCOVERY
Date Started: / /
Date Completed: 09/01/85
Priority Level: Not reported

---

**157 WNW 1/4-1/2 0.459 mi. 2423 ft.** | **WALT DISNEY COMPANY**
**530 RODIER DR.**
**GLENDALE, CA 91201** | **SLIC** | **S103994991**
**N/A**

**Relative: Lower**

**Actual: 465 ft.**

SLIC:
Region: STATE
**Facility Status:** **Completed - Case Closed**
Status Date: 12/22/2014
Global Id: SL603798947
Lead Agency: LOS ANGELES RWQCB (REGION 4)
Lead Agency Case Number: Not reported
Latitude: 34.157891
Longitude: -118.287544
Case Type: Cleanup Program Site
Case Worker: GJH
Local Agency: Not reported
RB Case Number: 109.0698
File Location: Not reported
Potential Media Affected: Aquifer used for drinking water supply
Potential Contaminants of Concern: Not reported
Site History: Not reported

Click here to access the California GeoTracker records for this facility:

**158 SOCAL GAS** **SLIC** **U001561525**
**SSE 4555 SPERRY ST.** **HIST UST** **N/A**
**1/4-1/2 LOS ANGELES, CA 90039**
**0.464 mi.**
**2450 ft.**

**Relative:**
**Lower**

**Actual:**
**455 ft.**

SLIC:

| | |
|---|---|
| Region: | STATE |
| **Facility Status:** | **Completed - Case Closed** |
| Status Date: | 11/14/2014 |
| Global Id: | SL603799113 |
| Lead Agency: | LOS ANGELES RWQCB (REGION 4) |
| Lead Agency Case Number: | Not reported |
| Latitude: | 34.148259 |
| Longitude: | -118.274812 |
| Case Type: | Cleanup Program Site |
| Case Worker: | GJH |
| Local Agency: | Not reported |
| RB Case Number: | 113.0365 |
| File Location: | Not reported |
| Potential Media Affected: | Aquifer used for drinking water supply |
| Potential Contaminants of Concern: | Not reported |
| Site History: | Not reported |

Click here to access the California GeoTracker records for this facility:

HIST UST:

| | |
|---|---|
| File Number: | 000286BB |
| URL: | http://geotracker.waterboards.ca.gov/ustpdfs/pdf/000286BB.pdf |
| Region: | STATE |
| Facility ID: | 00000007483 |
| Facility Type: | Other |
| Other Type: | PUBLIC UTILITY |
| Contact Name: | JOHN YOUNG |
| Telephone: | 8189512242 |
| Owner Name: | SOUTHERN CALIF. GAS COMPANY |
| Owner Address: | BOX 3249 TERMINAL ANNEX |
| Owner City,St,Zip: | LOS ANGELES, CA 90051 |
| Total Tanks: | 0004 |
| | |
| Tank Num: | 001 |
| Container Num: | DNOU103 |
| Year Installed: | 1980 |
| Tank Capacity: | 00012000 |
| Tank Used for: | PRODUCT |
| Type of Fuel: | 1 |
| Container Construction Thickness: | .25 |
| Leak Detection: | Stock Inventor |
| | |
| Tank Num: | 002 |
| Container Num: | DNOU100 |
| Year Installed: | Not reported |
| Tank Capacity: | 00000000 |
| Tank Used for: | WASTE |
| Type of Fuel: | 0 |
| Container Construction Thickness: | 6 |
| Leak Detection: | None |
| | |
| Tank Num: | 003 |

**SOCAL GAS (Continued)** **U001561525**

Container Num: DNOU101
Year Installed: Not reported
Tank Capacity: 00000280
Tank Used for: WASTE
Type of Fuel: 5
Container Construction Thickness: 12.
Leak Detection: None

Tank Num: 004
Container Num: DNOU102
Year Installed: Not reported
Tank Capacity: 00006000
Tank Used for: PRODUCT
Type of Fuel: 1
Container Construction Thickness: .25
Leak Detection: Stock Inventor

Click here for Geo Tracker PDF:

---

**159 SE 1/4-1/2 0.498 mi. 2628 ft.**

**KEN'S BROACHING**
**747 SALEM ST.**
**GLENDALE, CA 91203**

**SLIC** **S106484893**
**WIP** **N/A**

**Relative: Higher**

**Actual: 473 ft.**

SLIC:
Region: STATE
**Facility Status: Open - Inactive**
Status Date: 10/30/2014
Global Id: SL603799110
Lead Agency: LOS ANGELES RWQCB (REGION 4)
Lead Agency Case Number: Not reported
Latitude: 34.148795
Longitude: -118.270247
Case Type: Cleanup Program Site
Case Worker: GJH
Local Agency: Not reported
RB Case Number: 113.0338
File Location: Not reported
Potential Media Affected: Aquifer used for drinking water supply
Potential Contaminants of Concern: Not reported
Site History: Not reported

Click here to access the California GeoTracker records for this facility:

WIP:
Region: 4
File Number: 113.0338
**File Status: Backlog**
Staff: UNIDENTIFIED
Facility Suite: Not reported

**AA160** **BRAZIL STREET DEPOT** **ENVIROSTOR** **S107735961**
**SSE** **N/A**
**1/2-1** **GLENDALE, CA**
**0.570 mi.**
**3010 ft.** **Site 1 of 2 in cluster AA**

**Relative:**
**Lower**

**Actual:**
**445 ft.**

ENVIROSTOR:

| | |
|---|---|
| Facility ID: | 80000715 |
| Status: | No Further Action |
| Status Date: | 05/29/2015 |
| Site Code: | Not reported |
| Site Type: | Military Evaluation |
| Site Type Detailed: | FUDS |
| Acres: | 17 |
| NPL: | NO |
| Regulatory Agencies: | SMBRP |
| Lead Agency: | SMBRP |
| Program Manager: | Not reported |
| Supervisor: | Douglas Bautista |
| Division Branch: | Cleanup Cypress |
| Assembly: | 43 |
| Senate: | 25 |
| Special Program: | Not reported |
| Restricted Use: | NO |
| Site Mgmt Req: | NONE SPECIFIED |
| Funding: | DERA |
| Latitude: | 34.14666 |
| Longitude: | -118.275 |
| APN: | NONE SPECIFIED |
| Past Use: | FIRE TRAINING AREAS, FIRING RANGE - ARTILLERY |
| Potential COC: | Munitions Debris (MD |
| Confirmed COC: | Munitions Debris (MD |
| Potential Description: | SOIL |
| Alias Name: | CA99799F600200 |
| Alias Type: | Federal Facility ID |
| Alias Name: | J09CA1160 |
| Alias Type: | INPR |
| Alias Name: | 80000715 |
| Alias Type: | Envirostor ID Number |

Completed Info:

| | |
|---|---|
| Completed Area Name: | PROJECT WIDE |
| Completed Sub Area Name: | Not reported |
| Completed Document Type: | No Department of Defense Action Indicated (NDAI) |
| Completed Date: | 05/29/2015 |
| Comments: | Not reported |
| Future Area Name: | Not reported |
| Future Sub Area Name: | Not reported |
| Future Document Type: | Not reported |
| Future Due Date: | Not reported |
| Schedule Area Name: | Not reported |
| Schedule Sub Area Name: | Not reported |
| Schedule Document Type: | Not reported |
| Schedule Due Date: | Not reported |
| Schedule Revised Date: | Not reported |

**AA161** **LA DIST MAINT YARD** **ENVIROSTOR** **S107736563**
**SSE** **N/A**
**1/2-1** **LOS ANGELES, CA**
**0.588 mi.**
**3106 ft.** **Site 2 of 2 in cluster AA**

**Relative:**
**Lower**

**Actual:**
**442 ft.**

ENVIROSTOR:

| | |
|---|---|
| Facility ID: | 80000287 |
| Status: | Inactive - Needs Evaluation |
| Status Date: | 07/01/2005 |
| Site Code: | Not reported |
| Site Type: | Military Evaluation |
| Site Type Detailed: | FUDS |
| Acres: | Not reported |
| NPL: | NO |
| Regulatory Agencies: | SMBRP |
| Lead Agency: | SMBRP |
| Program Manager: | Not reported |
| Supervisor: | Douglas Bautista |
| Division Branch: | Cleanup Cypress |
| Assembly: | 43 |
| Senate: | 25 |
| Special Program: | Not reported |
| Restricted Use: | NO |
| Site Mgmt Req: | NONE SPECIFIED |
| Funding: | DERA |
| Latitude: | 34.14638 |
| Longitude: | -118.275 |
| APN: | NONE SPECIFIED |
| Past Use: | NONE SPECIFIED |
| Potential COC: | NONE SPECIFIED |
| Confirmed COC: | NONE SPECIFIED |
| Potential Description: | NONE SPECIFIED |
| Alias Name: | CA99799F548600 |
| Alias Type: | Federal Facility ID |
| Alias Name: | J09CA0427 |
| Alias Type: | INPR |
| Alias Name: | 80000287 |
| Alias Type: | Envirostor ID Number |

Completed Info:

| | |
|---|---|
| Completed Area Name: | Not reported |
| Completed Sub Area Name: | Not reported |
| Completed Document Type: | Not reported |
| Completed Date: | Not reported |
| Comments: | Not reported |
| Future Area Name: | Not reported |
| Future Sub Area Name: | Not reported |
| Future Document Type: | Not reported |
| Future Due Date: | Not reported |
| Schedule Area Name: | Not reported |
| Schedule Sub Area Name: | Not reported |
| Schedule Document Type: | Not reported |
| Schedule Due Date: | Not reported |
| Schedule Revised Date: | Not reported |

**162 NW 1/2-1 0.626 mi. 3307 ft.** | **GRAND CENTRAL AIR TERMINAL** | **FUDS** | **1007212202** **N/A**

**GLENDALE, CA**

**Relative: Higher**

**Actual: 473 ft.**

FUDS:

| | |
|---|---|
| Federal Facility ID: | CA9799F5452 |
| FUDS #: | J09CA0381 |
| INST ID: | 57118 |
| Facility Name: | GRAND CENTRAL AIR TERMINAL |
| City: | GLENDALE |
| State: | CA |
| EPA Region: | 09 |
| County: | LOS ANGELES |
| Congressional District: | 28 |
| US Army District: | Los Angeles District (SPL) |
| Fiscal Year: | 2013 |
| Telephone: | 213-452-3920 |
| NPL Status: | Not Listed |
| RAB: | Not reported |
| CTC: | 721.2999 |
| Current Owner: | Local Government; Private Sector |
| Current Prog: | Not reported |
| Future Prog: | Not reported |
| Acreage: | Not reported |
| Description: | The site comprised 188.86 acres in Glendale, California. The property is owned by several business industries and the city of Glendale. The site is currently located within the boundaries of the San Fernando Valley NPL Site, Glendale Operable Unit (San Fernando Superfund Site Area 2). Contamination at the Glendale Operable Unit consists of chlorinated solvents, namely TCE and PCE in groundwater. There is an allegation that contamination from the Burbank Operable Unit has migrated and contributed to the Glendale Operable Unit. The Record of Decision for Glendale-South Operable Unit for an interim remedy estiamted costs as high as $60 million. The Glendale Operable Unit is an EPA lead site. |
| History: | Between January 1942 and May 1943, the United States acquired legal interest in the Grand Central Air Terminal, which at the time was a privately-owned airport. A total of 188.83 acres were acquired for use by the military. A major portion of the acreage (181.7 acres) was leased from Curtis-Wright Corporation, and the balance (7.13 acres) was acquired through lesser interest. The site was utilized by the U.S. Army Air Force as a training facility and subsidiary airport during World War II. The site also served as a sub-base to Van Nuys Municipal Airport. From 1942-1943, the U.S. Army constructed improvements on the then-existing airport and adjoining land. In January 1946, the U.S. Army determined the site to be surplus to their needs and the major lease for 181.7 a res was terminated in 1948. The 7.13 acres of lesser interest use was terminated between 1944 and 1948. The streets had been closed and utilized by the U.S. Army. In October 1946, an agreement was executed between the U.S. Government and the City of Glendale, which relieved the U.S. Government of any further responsibility for street maintenance. |
| Latitude: | -118.287002563 |
| Longitude: | 34.160598754900 |

**AB163** **DRILUBE COMPANY** **ENVIROSTOR** **S101480702**
**SE** **723 WEST BROADWAY** **N/A**
**1/2-1** **GLENDALE, CA 91204**
**0.650 mi.**
**3431 ft.** **Site 1 of 3 in cluster AB**

**Relative:**
**Higher**

**Actual:**
**472 ft.**

ENVIROSTOR:

| | |
|---|---|
| Facility ID: | 19290258 |
| Status: | Refer: RWQCB |
| Status Date: | 08/31/1995 |
| Site Code: | Not reported |
| Site Type: | Historical |
| Site Type Detailed: | * Historical |
| Acres: | Not reported |
| NPL: | NO |
| Regulatory Agencies: | NONE SPECIFIED |
| Lead Agency: | NONE SPECIFIED |
| Program Manager: | Not reported |
| Supervisor: | * Mmonroy |
| Division Branch: | Cleanup Chatsworth |
| Assembly: | 43 |
| Senate: | 25 |
| Special Program: | Not reported |
| Restricted Use: | NO |
| Site Mgmt Req: | NONE SPECIFIED |
| Funding: | Not reported |
| Latitude: | 34.14710 |
| Longitude: | -118.2709 |
| APN: | 5638004027 |
| Past Use: | NONE SPECIFIED |
| Potential COC: | * UNSPECIFIED ACID SOLUTION * UNSPECIFIED SOLVENT MIXTURES Cyanide (free |
| Confirmed COC: | NONE SPECIFIED |
| Potential Description: | NONE SPECIFIED |
| Alias Name: | PLATERS, THE |
| Alias Type: | Alternate Name |
| Alias Name: | 5638004027 |
| Alias Type: | APN |
| Alias Name: | CAD008337099 |
| Alias Type: | EPA Identification Number |
| Alias Name: | 19290258 |
| Alias Type: | Envirostor ID Number |

Completed Info:

| | |
|---|---|
| Completed Area Name: | PROJECT WIDE |
| Completed Sub Area Name: | Not reported |
| Completed Document Type: | * Discovery |
| Completed Date: | 10/15/1982 |
| Comments: | FACILITY IDENTIFIED ID BY LOS ANGELES CHAM COMM DIR 63-64. LUBRICANTS. Not reported |
| Completed Area Name: | PROJECT WIDE |
| Completed Sub Area Name: | Not reported |
| Completed Document Type: | Site Screening |
| Completed Date: | 04/14/1995 |
| Comments: | NFA FOR DTSC. |
| Completed Area Name: | PROJECT WIDE |
| Completed Sub Area Name: | Not reported |
| Completed Document Type: | Site Screening |

**DRILUBE COMPANY (Continued)** **S101480702**

Completed Date: 06/08/1994
Comments: Site screening/visit conducted. Business has been at this site since 1951. It is a PBR facility regulated by HWM program. RWQCB is investigating the site.

Completed Area Name: PROJECT WIDE
Completed Sub Area Name: Not reported
Completed Document Type: Site Screening
Completed Date: 11/17/1988
Comments: SITE SCREENING DONE PAL BASED ON LACK OF INFO.

Completed Area Name: PROJECT WIDE
Completed Sub Area Name: Not reported
Completed Document Type: Preliminary Assessment Report
Completed Date: 12/01/1985
Comments: SOURCE ACT: DHS/ASAP SURVEY 1985 - PLATG & DRY FILM LUBRICANT MFG. YR OF OPER:'45 TO PRESENT. OTHER LOC: 718 W WILSON (194 TO PRESETN) DISTILLATION & CLARIFIERS ONSITE. PRELIM ASSESS DONE CERCLA 104

Future Area Name: Not reported
Future Sub Area Name: Not reported
Future Document Type: Not reported
Future Due Date: Not reported
Schedule Area Name: Not reported
Schedule Sub Area Name: Not reported
Schedule Document Type: Not reported
Schedule Due Date: Not reported
Schedule Revised Date: Not reported

---

**AB164**
**SE**
**1/2-1**
**0.665 mi.**
**3512 ft.**

**Relative:**
**Higher**

**Actual:**
**476 ft.**

**DRILUBE CO**
**711 W. BROADWAY**
**GLENDALE, CA 91204**

**Site 2 of 3 in cluster AB**

**SEMS-ARCHIVE** **1000292865**
**RCRA-SQG** **CAD008337099**
**ENVIROSTOR**
**SLIC**
**ICIS**
**FINDS**
**HAZNET**
**WIP**
**ECHO**

SEMS-ARCHIVE:
Site ID: 901063
EPA ID: CAD008337099
Federal Facility: N
NPL: Not on the NPL
Non NPL Status: NFRAP-Site does not qualify for the NPL based on existing information

**Following information was gathered from the prior CERCLIS update completed in 10/2013:**
Site ID: 0901063
Federal Facility: Not a Federal Facility
NPL Status: Not on the NPL
Non NPL Status: NFRAP-Site does not qualify for the NPL based on existing information

CERCLIS-NFRAP Site Contact Details:
Contact Sequence ID: 13288287.00000
Person ID: 13003854.00000

Contact Sequence ID: 13293882.00000

**DRILUBE CO (Continued)** **1000292865**

Person ID: 13003858.00000

Contact Sequence ID: 13299740.00000
Person ID: 13004003.00000

CERCLIS-NFRAP Assessment History:
Action: DISCOVERY
Date Started: / /
Date Completed: 02/01/86
Priority Level: Not reported

Action: ARCHIVE SITE
Date Started: / /
Date Completed: 05/01/86
Priority Level: Not reported

Action: PRELIMINARY ASSESSMENT
Date Started: 01/01/86
Date Completed: 05/01/86
Priority Level: NFRAP-Site does not qualify for the NPL based on existing information

RCRA-SQG:
Date form received by agency: 02/26/2004
Facility name: DRILUBE
Facility address: 711 W BROADWAY
GLENDALE, CA 91204
EPA ID: CAD008337099
Mailing address: 8401 STANDUSTRIAL AVE
STANTON, CA 90680
Contact: GEOFFREY E BLAKE
Contact address: Not reported
Not reported
Contact country: US
Contact telephone: (714) 828-8238
Contact email: GEOFFB@ALLMETALSPROCESSING.COM
EPA Region: 09
Land type: Private
Classification: Small Small Quantity Generator
Description: Handler: generates more than 100 and less than 1000 kg of hazardous waste during any calendar month and accumulates less than 6000 kg of hazardous waste at any time; or generates 100 kg or less of hazardous waste during any calendar month, and accumulates more than 1000 kg of hazardous waste at any time

Owner/Operator Summary:
Owner/operator name: DRILUBE
Owner/operator address: 711 W BROADWAY
GLENDALE, CA 91204
Owner/operator country: US
Owner/operator telephone: Not reported
Legal status: Private
Owner/Operator Type: Owner
Owner/Op start date: 01/01/1946
Owner/Op end date: Not reported

Owner/operator name: DRILUBE

**DRILUBE CO (Continued)** **1000292865**

Owner/operator address: Not reported
Not reported
Owner/operator country: US
Owner/operator telephone: Not reported
Legal status: Private
Owner/Operator Type: Operator
Owner/Op start date: 01/01/1946
Owner/Op end date: Not reported

Handler Activities Summary:
U.S. importer of hazardous waste: No
Mixed waste (haz. and radioactive): No
Recycler of hazardous waste: No
Transporter of hazardous waste: No
Treater, storer or disposer of HW: No
Underground injection activity: No
On-site burner exemption: No
Furnace exemption: No
Used oil fuel burner: No
Used oil processor: No
User oil refiner: No
Used oil fuel marketer to burner: No
Used oil Specification marketer: No
Used oil transfer facility: No
Used oil transporter: No

Historical Generators:
Date form received by agency: 02/26/2004
Site name: DRILUBE
Classification: Large Quantity Generator

. Waste code: D001
. Waste name: IGNITABLE WASTE

. Waste code: D003
. Waste name: REACTIVE WASTE

. Waste code: D039
. Waste name: TETRACHLOROETHYLENE

. Waste code: F001
. Waste name: THE FOLLOWING SPENT HALOGENATED SOLVENTS USED IN DEGREASING: TETRACHLOROETHYLENE, TRICHLORETHYLENE, METHYLENE CHLORIDE, 1,1,1-TRICHLOROETHANE, CARBON TETRACHLORIDE AND CHLORINATED FLUOROCARBONS; ALL SPENT SOLVENT MIXTURES/BLENDS USED IN DEGREASING CONTAINING, BEFORE USE, A TOTAL OF TEN PERCENT OR MORE (BY VOLUME) OF ONE OR MORE OF THE ABOVE HALOGENATED SOLVENTS OR THOSE SOLVENTS LISTED IN F002, F004, AND F005; AND STILL BOTTOMS FROM THE RECOVERY OF THESE SPENT SOLVENTS AND SPENT SOLVENT MIXTURES.

. Waste code: F003
. Waste name: THE FOLLOWING SPENT NONHALOGENATED SOLVENTS: XYLENE, ACETONE, ETHYL ACETATE, ETHYL BENZENE, ETHYL ETHER, METHYL ISOBUTYL KETONE, N-BUTYL ALCOHOL, CYCLOHEXANONE, AND METHANOL; ALL SPENT SOLVENT MIXTURES/BLENDS CONTAINING, BEFORE USE, ONLY THE ABOVE SPENT NONHALOGENATED SOLVENTS; AND ALL SPENT SOLVENT MIXTURES/BLENDS

**DRILUBE CO (Continued)** **1000292865**

CONTAINING, BEFORE USE, ONE OR MORE OF THE ABOVE NONHALOGENATED SOLVENTS, AND A TOTAL OF TEN PERCENT OR MORE (BY VOLUME) OF ONE OR MORE OF THOSE SOLVENTS LISTED IN F001, F002, F004, AND F005; AND STILL BOTTOMS FROM THE RECOVERY OF THESE SPENT SOLVENTS AND SPENT SOLVENT MIXTURES.

. Waste code: F005
. Waste name: THE FOLLOWING SPENT NONHALOGENATED SOLVENTS: TOLUENE, METHYL ETHYL KETONE, CARBON DISULFIDE, ISOBUTANOL, PYRIDINE, BENZENE, 2-ETHOXYETHANOL, AND 2-NITROPROPANE; ALL SPENT SOLVENT MIXTURES/BLENDS CONTAINING, BEFORE USE, A TOTAL OF TEN PERCENT OR MORE (BY VOLUME) OF ONE OR MORE OF THE ABOVE NONHALOGENATED SOLVENTS OR THOSE SOLVENTS LISTED IN F001, F002, OR F004; AND STILL BOTTOMS FROM THE RECOVERY OF THESE SPENT SOLVENTS AND SPENT SOLVENT MIXTURES.

. Waste code: F006
. Waste name: WASTEWATER TREATMENT SLUDGES FROM ELECTROPLATING OPERATIONS, EXCEPT FROM THE FOLLOWING PROCESSES: (1) SULFURIC ACID ANODIZING OF ALUMINUM; (2) TIN PLATING ON CARBON STEEL; (3) ZINC PLATING (SEGREGATED BASIS) ON CARBON STEEL; (4) ALUMINUM OR ZINC-ALUMINUM PLATING ON CARBON STEEL; (5) CLEANING/STRIPPING ASSOCIATED WITH TIN, ZINC, AND ALUMINUM PLATING ON CARBON STEEL; AND (6) CHEMICAL ETCHING AND MILLING OF ALUMINUM.

. Waste code: F008
. Waste name: PLATING BATH RESIDUES FROM THE BOTTOM OF PLATING BATHS FROM ELECTROPLATING OPERATIONS IN WHICH CYANIDES ARE USED IN THE PROCESS.

Date form received by agency: 02/28/2002
Site name: DRILUBE COMPANY
Classification: Large Quantity Generator

. Waste code: 121
. Waste name: 121

. Waste code: 131
. Waste name: 131

. Waste code: 171
. Waste name: 171

. Waste code: 181
. Waste name: 181

. Waste code: 211
. Waste name: 211

. Waste code: 212
. Waste name: 212

. Waste code: 213
. Waste name: 213

. Waste code: 221
. Waste name: 221

. Waste code: 222

**DRILUBE CO (Continued)** **1000292865**

. Waste name: 222

. Waste code: 461
. Waste name: 461

. Waste code: 512
. Waste name: 512

. Waste code: 513
. Waste name: 513

. Waste code: 711
. Waste name: 711

. Waste code: 722
. Waste name: 722

. Waste code: 723
. Waste name: 723

. Waste code: 726
. Waste name: 726

. Waste code: 741
. Waste name: 741

. Waste code: D002
. Waste name: CORROSIVE WASTE

. Waste code: D006
. Waste name: CADMIUM

. Waste code: D007
. Waste name: CHROMIUM

. Waste code: D011
. Waste name: SILVER

. Waste code: D028
. Waste name: 1,2-DICHLOROETHANE

. Waste code: D035
. Waste name: METHYL ETHYL KETONE

. Waste code: D039
. Waste name: TETRACHLOROETHYLENE

. Waste code: F001
. Waste name: THE FOLLOWING SPENT HALOGENATED SOLVENTS USED IN DEGREASING: TETRACHLOROETHYLENE, TRICHLORETHYLENE, METHYLENE CHLORIDE, 1,1,1-TRICHLOROETHANE, CARBON TETRACHLORIDE AND CHLORINATED FLUOROCARBONS; ALL SPENT SOLVENT MIXTURES/BLENDS USED IN DEGREASING CONTAINING, BEFORE USE, A TOTAL OF TEN PERCENT OR MORE (BY VOLUME) OF ONE OR MORE OF THE ABOVE HALOGENATED SOLVENTS OR THOSE SOLVENTS LISTED IN F002, F004, AND F005; AND STILL BOTTOMS FROM THE RECOVERY OF THESE SPENT SOLVENTS AND SPENT SOLVENT MIXTURES.

**DRILUBE CO (Continued)** **1000292865**

. Waste code: F003
. Waste name: THE FOLLOWING SPENT NONHALOGENATED SOLVENTS: XYLENE, ACETONE, ETHYL ACETATE, ETHYL BENZENE, ETHYL ETHER, METHYL ISOBUTYL KETONE, N-BUTYL ALCOHOL, CYCLOHEXANONE, AND METHANOL; ALL SPENT SOLVENT MIXTURES/BLENDS CONTAINING, BEFORE USE, ONLY THE ABOVE SPENT NONHALOGENATED SOLVENTS; AND ALL SPENT SOLVENT MIXTURES/BLENDS CONTAINING, BEFORE USE, ONE OR MORE OF THE ABOVE NONHALOGENATED SOLVENTS, AND A TOTAL OF TEN PERCENT OR MORE (BY VOLUME) OF ONE OR MORE OF THOSE SOLVENTS LISTED IN F001, F002, F004, AND F005; AND STILL BOTTOMS FROM THE RECOVERY OF THESE SPENT SOLVENTS AND SPENT SOLVENT MIXTURES.

. Waste code: F005
. Waste name: THE FOLLOWING SPENT NONHALOGENATED SOLVENTS: TOLUENE, METHYL ETHYL KETONE, CARBON DISULFIDE, ISOBUTANOL, PYRIDINE, BENZENE, 2-ETHOXYETHANOL, AND 2-NITROPROPANE; ALL SPENT SOLVENT MIXTURES/BLENDS CONTAINING, BEFORE USE, A TOTAL OF TEN PERCENT OR MORE (BY VOLUME) OF ONE OR MORE OF THE ABOVE NONHALOGENATED SOLVENTS OR THOSE SOLVENTS LISTED IN F001, F002, OR F004; AND STILL BOTTOMS FROM THE RECOVERY OF THESE SPENT SOLVENTS AND SPENT SOLVENT MIXTURES.

. Waste code: F006
. Waste name: WASTEWATER TREATMENT SLUDGES FROM ELECTROPLATING OPERATIONS, EXCEPT FROM THE FOLLOWING PROCESSES: (1) SULFURIC ACID ANODIZING OF ALUMINUM; (2) TIN PLATING ON CARBON STEEL; (3) ZINC PLATING (SEGREGATED BASIS) ON CARBON STEEL; (4) ALUMINUM OR ZINC-ALUMINUM PLATING ON CARBON STEEL; (5) CLEANING/STRIPPING ASSOCIATED WITH TIN, ZINC, AND ALUMINUM PLATING ON CARBON STEEL; AND (6) CHEMICAL ETCHING AND MILLING OF ALUMINUM.

. Waste code: F007
. Waste name: SPENT CYANIDE PLATING BATH SOLUTIONS FROM ELECTROPLATING OPERATIONS.

. Waste code: F008
. Waste name: PLATING BATH RESIDUES FROM THE BOTTOM OF PLATING BATHS FROM ELECTROPLATING OPERATIONS IN WHICH CYANIDES ARE USED IN THE PROCESS.

. Waste code: F009
. Waste name: SPENT STRIPPING AND CLEANING BATH SOLUTIONS FROM ELECTROPLATING OPERATIONS IN WHICH CYANIDES ARE USED IN THE PROCESS.

Date form received by agency: 10/12/2000
Site name: DRILUBE
Classification: Large Quantity Generator

Date form received by agency: 03/16/1999
Site name: DRILUBE
Classification: Large Quantity Generator

Date form received by agency: 09/01/1996
Site name: DRILUBE COMPANY#
Classification: Large Quantity Generator

Date form received by agency: 02/29/1992
Site name: DRILUBE CO
Classification: Large Quantity Generator

**DRILUBE CO (Continued)** **1000292865**

Date form received by agency: 04/13/1990
Site name: DRILUBE COMPANY#
Classification: Large Quantity Generator

Date form received by agency: 07/25/1980
Site name: DRILUBE COMPANY#
Classification: Large Quantity Generator

Facility Has Received Notices of Violations:
Regulation violated: F - GMC
Area of violation: Generators - Pre-transport
Date violation determined: 10/07/2002
Date achieved compliance: 08/11/2003
Violation lead agency: EPA
Enforcement action: Not reported
Enforcement action date: 11/21/2002
Enf. disposition status: Not reported
Enf. disp. status date: Not reported
Enforcement lead agency: EPA
Proposed penalty amount: Not reported
Final penalty amount: Not reported
Paid penalty amount: Not reported

Regulation violated: F - GTG
Area of violation: Generators - Pre-transport
Date violation determined: 10/07/2002
Date achieved compliance: 05/23/2003
Violation lead agency: EPA
Enforcement action: Not reported
Enforcement action date: 11/21/2002
Enf. disposition status: Not reported
Enf. disp. status date: Not reported
Enforcement lead agency: EPA
Proposed penalty amount: Not reported
Final penalty amount: Not reported
Paid penalty amount: Not reported

Regulation violated: F - GMC
Area of violation: Generators - Pre-transport
Date violation determined: 10/07/2002
Date achieved compliance: 08/11/2003
Violation lead agency: EPA
Enforcement action: WRITTEN INFORMAL
Enforcement action date: 04/30/2003
Enf. disposition status: Not reported
Enf. disp. status date: Not reported
Enforcement lead agency: EPA
Proposed penalty amount: Not reported
Final penalty amount: Not reported
Paid penalty amount: Not reported

Regulation violated: F - 262.30-34.C
Area of violation: Generators - General
Date violation determined: 10/07/2002
Date achieved compliance: 05/23/2003
Violation lead agency: EPA
Enforcement action: Not reported

**DRILUBE CO (Continued)** **1000292865**

Enforcement action date: 11/21/2002
Enf. disposition status: Not reported
Enf. disp. status date: Not reported
Enforcement lead agency: EPA
Proposed penalty amount: Not reported
Final penalty amount: Not reported
Paid penalty amount: Not reported

Regulation violated: F - 273.30-40
Area of violation: Universal Waste - Large Quantity Handlers
Date violation determined: 10/07/2002
Date achieved compliance: 05/16/2003
Violation lead agency: EPA
Enforcement action: Not reported
Enforcement action date: 11/21/2002
Enf. disposition status: Not reported
Enf. disp. status date: Not reported
Enforcement lead agency: EPA
Proposed penalty amount: Not reported
Final penalty amount: Not reported
Paid penalty amount: Not reported

Evaluation Action Summary:
Evaluation date: 08/11/2003
Evaluation: NOT A SIGNIFICANT NON-COMPLIER
Area of violation: Not reported
Date achieved compliance: Not reported
Evaluation lead agency: EPA

Evaluation date: 12/09/2002
Evaluation: SIGNIFICANT NON-COMPLIER
Area of violation: Generators - Pre-transport
Date achieved compliance: 08/11/2003
Evaluation lead agency: EPA

Evaluation date: 10/07/2002
Evaluation: COMPLIANCE EVALUATION INSPECTION ON-SITE
Area of violation: Generators - General
Date achieved compliance: 05/23/2003
Evaluation lead agency: EPA

Evaluation date: 10/07/2002
Evaluation: COMPLIANCE EVALUATION INSPECTION ON-SITE
Area of violation: Generators - Pre-transport
Date achieved compliance: 08/11/2003
Evaluation lead agency: EPA

Evaluation date: 10/07/2002
Evaluation: COMPLIANCE EVALUATION INSPECTION ON-SITE
Area of violation: Generators - Pre-transport
Date achieved compliance: 05/23/2003
Evaluation lead agency: EPA

Evaluation date: 10/07/2002
Evaluation: COMPLIANCE EVALUATION INSPECTION ON-SITE
Area of violation: Universal Waste - Large Quantity Handlers
Date achieved compliance: 05/16/2003

**DRILUBE CO (Continued)** **1000292865**

Evaluation lead agency: EPA

ENVIROSTOR:

| | |
|---|---|
| Facility ID: | 71002199 |
| Status: | Refer: Other Agency |
| Status Date: | Not reported |
| Site Code: | Not reported |
| Site Type: | Tiered Permit |
| Site Type Detailed: | Tiered Permit |
| Acres: | Not reported |
| NPL: | NO |
| Regulatory Agencies: | NONE SPECIFIED |
| Lead Agency: | NONE SPECIFIED |
| Program Manager: | Not reported |
| Supervisor: | Not reported |
| Division Branch: | Cleanup Chatsworth |
| Assembly: | 43 |
| Senate: | 25 |
| Special Program: | Not reported |
| Restricted Use: | NO |
| Site Mgmt Req: | NONE SPECIFIED |
| Funding: | Not reported |
| Latitude: | 34.14710 |
| Longitude: | -118.2703 |
| APN: | NONE SPECIFIED |
| Past Use: | NONE SPECIFIED |
| Potential COC: | NONE SPECIFIED |
| Confirmed COC: | NONE SPECIFIED |
| Potential Description: | NONE SPECIFIED |
| Alias Name: | CAD008337099 |
| Alias Type: | EPA Identification Number |
| Alias Name: | 71002199 |
| Alias Type: | Envirostor ID Number |

Completed Info:

| | |
|---|---|
| Completed Area Name: | Not reported |
| Completed Sub Area Name: | Not reported |
| Completed Document Type: | Not reported |
| Completed Date: | Not reported |
| Comments: | Not reported |
| Future Area Name: | Not reported |
| Future Sub Area Name: | Not reported |
| Future Document Type: | Not reported |
| Future Due Date: | Not reported |
| Schedule Area Name: | Not reported |
| Schedule Sub Area Name: | Not reported |
| Schedule Document Type: | Not reported |
| Schedule Due Date: | Not reported |
| Schedule Revised Date: | Not reported |

SLIC:

| | |
|---|---|
| Region: | STATE |
| **Facility Status:** | **Open - Remediation** |
| Status Date: | 11/09/1998 |
| Global Id: | SL603799102 |
| Lead Agency: | US ENVIRONMENTAL PROTECTION AGENCY |
| Lead Agency Case Number: | 113.0165 |

**DRILUBE CO (Continued)** **1000292865**

| | |
|---|---|
| Latitude: | 34.1469125840995 |
| Longitude: | -118.270341960358 |
| Case Type: | Cleanup Program Site |
| Case Worker: | Not reported |
| Local Agency: | Not reported |
| RB Case Number: | Not reported |
| File Location: | Not reported |
| Potential Media Affected: | Aquifer used for drinking water supply |
| Potential Contaminants of Concern: | Not reported |
| Site History: | Not reported |

Click here to access the California GeoTracker records for this facility:

ICIS:

| | |
|---|---|
| Enforcement Action ID: | 09-2002-0114 |
| FRS ID: | 110000476672 |
| Program ID: | RE-POWERING 71002199-12832 |
| Action Name: | DRILUBE COMPANY - APC |
| Full Address: | 711 W. BROADWAY GLENDALE CA 912041009 |
| State: | California |
| Facility Name: | DRILUBE CO |
| Facility Address: | 711 W. BROADWAY<br>GLENDALE, CA 912041009 |
| Enforcement Action Type: | CAA 113D1 Action For Penalty |
| Facility County: | LOS ANGELES |
| EPA Region #: | 9 |

| | |
|---|---|
| Enforcement Action ID: | 09-2002-0114 |
| FRS ID: | 110000476672 |
| Program ID: | RCRAINFO CAD008337099 |
| Action Name: | DRILUBE COMPANY - APC |
| Full Address: | 711 W. BROADWAY GLENDALE CA 912041009 |
| State: | California |
| Facility Name: | DRILUBE CO |
| Facility Address: | 711 W. BROADWAY<br>GLENDALE, CA 912041009 |
| Enforcement Action Type: | CAA 113D1 Action For Penalty |
| Facility County: | LOS ANGELES |
| EPA Region #: | 9 |

| | |
|---|---|
| Enforcement Action ID: | 09-2002-0114 |
| FRS ID: | 110000476672 |
| Program ID: | NEI NEI20601 |
| Action Name: | DRILUBE COMPANY - APC |
| Full Address: | 711 W. BROADWAY GLENDALE CA 912041009 |
| State: | California |
| Facility Name: | DRILUBE CO |
| Facility Address: | 711 W. BROADWAY<br>GLENDALE, CA 912041009 |
| Enforcement Action Type: | CAA 113D1 Action For Penalty |
| Facility County: | LOS ANGELES |
| EPA Region #: | 9 |

| | |
|---|---|
| Enforcement Action ID: | 09-2002-0114 |
| FRS ID: | 110000476672 |
| Program ID: | FRS 110000476672 |
| Action Name: | DRILUBE COMPANY - APC |

**DRILUBE CO (Continued)** **1000292865**

| | |
|---|---|
| Full Address: | 711 W. BROADWAY GLENDALE CA 912041009 |
| State: | California |
| Facility Name: | DRILUBE CO |
| Facility Address: | 711 W. BROADWAY<br>GLENDALE, CA 912041009 |
| Enforcement Action Type: | CAA 113D1 Action For Penalty |
| Facility County: | LOS ANGELES |
| EPA Region #: | 9 |

| | |
|---|---|
| Enforcement Action ID: | 09-2002-0114 |
| FRS ID: | 110000476672 |
| Program ID: | BR CAD008337099 |
| Action Name: | DRILUBE COMPANY - APC |
| Full Address: | 711 W. BROADWAY GLENDALE CA 912041009 |
| State: | California |
| Facility Name: | DRILUBE CO |
| Facility Address: | 711 W. BROADWAY<br>GLENDALE, CA 912041009 |
| Enforcement Action Type: | CAA 113D1 Action For Penalty |
| Facility County: | LOS ANGELES |
| EPA Region #: | 9 |

| | |
|---|---|
| Enforcement Action ID: | 09-2002-0114 |
| FRS ID: | 110000476672 |
| Program ID: | TRIS 91204DRLBC711WB |
| Action Name: | DRILUBE COMPANY - APC |
| Full Address: | 711 W. BROADWAY GLENDALE CA 912041009 |
| State: | California |
| Facility Name: | DRILUBE CO |
| Facility Address: | 711 W. BROADWAY<br>GLENDALE, CA 912041009 |
| Enforcement Action Type: | CAA 113D1 Action For Penalty |
| Facility County: | LOS ANGELES |
| EPA Region #: | 9 |

| | |
|---|---|
| Enforcement Action ID: | 09-2002-0026 |
| FRS ID: | 110000476672 |
| Program ID: | RE-POWERING 71002199-12832 |
| Action Name: | DRILUBE COMPANY |
| Full Address: | 711 W. BROADWAY GLENDALE CA 912041009 |
| State: | California |
| Facility Name: | DRILUBE CO |
| Facility Address: | 711 W. BROADWAY<br>GLENDALE, CA 912041009 |
| Enforcement Action Type: | CAA 113A Admin Compliance Order (Non-Penalty) |
| Facility County: | LOS ANGELES |
| EPA Region #: | 9 |

| | |
|---|---|
| Enforcement Action ID: | 09-2002-0026 |
| FRS ID: | 110000476672 |
| Program ID: | RCRAINFO CAD008337099 |
| Action Name: | DRILUBE COMPANY |
| Full Address: | 711 W. BROADWAY GLENDALE CA 912041009 |
| State: | California |
| Facility Name: | DRILUBE CO |
| Facility Address: | 711 W. BROADWAY<br>GLENDALE, CA 912041009 |

**DRILUBE CO (Continued)** **1000292865**

Enforcement Action Type: CAA 113A Admin Compliance Order (Non-Penalty)
Facility County: LOS ANGELES
EPA Region #: 9

Enforcement Action ID: 09-2002-0026
FRS ID: 110000476672
Program ID: NEI NEI20601
Action Name: DRILUBE COMPANY
Full Address: 711 W. BROADWAY GLENDALE CA 912041009
State: California
Facility Name: DRILUBE CO
Facility Address: 711 W. BROADWAY
GLENDALE, CA 912041009
Enforcement Action Type: CAA 113A Admin Compliance Order (Non-Penalty)
Facility County: LOS ANGELES
EPA Region #: 9

Enforcement Action ID: 09-2002-0026
FRS ID: 110000476672
Program ID: FRS 110000476672
Action Name: DRILUBE COMPANY
Full Address: 711 W. BROADWAY GLENDALE CA 912041009
State: California
Facility Name: DRILUBE CO
Facility Address: 711 W. BROADWAY
GLENDALE, CA 912041009
Enforcement Action Type: CAA 113A Admin Compliance Order (Non-Penalty)
Facility County: LOS ANGELES
EPA Region #: 9

Enforcement Action ID: 09-2002-0026
FRS ID: 110000476672
Program ID: BR CAD008337099
Action Name: DRILUBE COMPANY
Full Address: 711 W. BROADWAY GLENDALE CA 912041009
State: California
Facility Name: DRILUBE CO
Facility Address: 711 W. BROADWAY
GLENDALE, CA 912041009
Enforcement Action Type: CAA 113A Admin Compliance Order (Non-Penalty)
Facility County: LOS ANGELES
EPA Region #: 9

Enforcement Action ID: 09-2002-0026
FRS ID: 110000476672
Program ID: TRIS 91204DRLBC711WB
Action Name: DRILUBE COMPANY
Full Address: 711 W. BROADWAY GLENDALE CA 912041009
State: California
Facility Name: DRILUBE CO
Facility Address: 711 W. BROADWAY
GLENDALE, CA 912041009
Enforcement Action Type: CAA 113A Admin Compliance Order (Non-Penalty)
Facility County: LOS ANGELES
EPA Region #: 9

**DRILUBE CO (Continued)** **1000292865**

Program ID: BR CAD008337099
Facility Name: DRILUBE CO
Address: 711 W. BROADWAY
Tribal Indicator: N
Fed Facility: No
NAIC Code: Not reported
SIC Code: 3471

Program ID: FRS 110000476672
Facility Name: DRILUBE CO
Address: 711 W. BROADWAY
Tribal Indicator: N
Fed Facility: No
NAIC Code: Not reported
SIC Code: 3471

Program ID: NEI NEI20601
Facility Name: DRILUBE CO
Address: 711 W. BROADWAY
Tribal Indicator: N
Fed Facility: No
NAIC Code: Not reported
SIC Code: 3471

Program ID: RCRAINFO CAD008337099
Facility Name: DRILUBE CO
Address: 711 W. BROADWAY
Tribal Indicator: N
Fed Facility: No
NAIC Code: Not reported
SIC Code: 3471

Program ID: RE-POWERING 71002199-12832
Facility Name: DRILUBE CO
Address: 711 W. BROADWAY
Tribal Indicator: N
Fed Facility: No
NAIC Code: Not reported
SIC Code: 3471

Program ID: TRIS 91204DRLBC711WB
Facility Name: DRILUBE CO
Address: 711 W. BROADWAY
Tribal Indicator: N
Fed Facility: No
NAIC Code: Not reported
SIC Code: 3471

Program ID: BR CAD008337099
Facility Name: DRILUBE CO
Address: 711 W. BROADWAY
Tribal Indicator: N
Fed Facility: No
NAIC Code: Not reported
SIC Code: 3471

Program ID: FRS 110000476672

**DRILUBE CO (Continued)** **1000292865**

Facility Name: DRILUBE CO
Address: 711 W. BROADWAY
Tribal Indicator: N
Fed Facility: No
NAIC Code: Not reported
SIC Code: 3471

Program ID: NEI NEI20601
Facility Name: DRILUBE CO
Address: 711 W. BROADWAY
Tribal Indicator: N
Fed Facility: No
NAIC Code: Not reported
SIC Code: 3471

Program ID: RCRAINFO CAD008337099
Facility Name: DRILUBE CO
Address: 711 W. BROADWAY
Tribal Indicator: N
Fed Facility: No
NAIC Code: Not reported
SIC Code: 3471

Program ID: RE-POWERING 71002199-12832
Facility Name: DRILUBE CO
Address: 711 W. BROADWAY
Tribal Indicator: N
Fed Facility: No
NAIC Code: Not reported
SIC Code: 3471

Program ID: TRIS 91204DRLBC711WB
Facility Name: DRILUBE CO
Address: 711 W. BROADWAY
Tribal Indicator: N
Fed Facility: No
NAIC Code: Not reported
SIC Code: 3471

FINDS:

Registry ID: 110000476672

Environmental Interest/Information System

US EPA TRIS (Toxics Release Inventory System) contains information from facilities on the amounts of over 300 listed toxic chemicals that these facilities release directly to air, water, land, or that are transported off-site.

US National Pollutant Discharge Elimination System (NPDES) module of the Compliance Information System (ICIS) tracks surface water permits issued under the Clean Water Act. Under NPDES, all facilities that discharge pollutants from any point source into waters of the United States are required to obtain a permit. The permit will likely contain limits on what can be discharged, impose monitoring and reporting requirements, and include other provisions to ensure that the discharge does not adversely affect water quality.

**DRILUBE CO (Continued)** **1000292865**

RCRAInfo is a national information system that supports the Resource Conservation and Recovery Act (RCRA) program through the tracking of events and activities related to facilities that generate, transport, and treat, store, or dispose of hazardous waste. RCRAInfo allows RCRA program staff to track the notification, permit, compliance, and corrective action activities required under RCRA.

HAZARDOUS WASTE BIENNIAL REPORTER

ICIS (Integrated Compliance Information System) is the Integrated Compliance Information System and provides a database that, when complete, will contain integrated Enforcement and Compliance information across most of EPA's programs. The vision for ICIS is to replace EPA's independent databases that contain Enforcement data with a single repository for that information. Currently, ICIS contains all Federal Administrative and Judicial enforcement actions. This information is maintained in ICIS by EPA in the Regional offices and it Headquarters. A future release of ICIS will replace the Permit Compliance System (PCS) which supports the NPDES and will integrate that information with Federal actions already in the system. ICIS also has the capability to track other activities occurring in the Region that support Compliance and Enforcement programs. These include; Incident Tracking, Compliance Assistance, and Compliance Monitoring.

HAZNET:

| | |
|---|---|
| envid: | 1000292865 |
| Year: | 2004 |
| GEPAID: | CAD008337099 |
| Contact: | MICHAEL MOONE/TECH DIRECTOR |
| Telephone: | 8182408144 |
| Mailing Name: | Not reported |
| Mailing Address: | 711 W BROADWAY |
| Mailing City,St,Zip: | GLENDALE, CA 912041009 |
| Gen County: | Not reported |
| TSD EPA ID: | CAD044429835 |
| TSD County: | Not reported |
| Waste Category: | Other inorganic solid waste |
| Disposal Method: | Disposal, Other |
| Tons: | 4 |
| Cat Decode: | Other inorganic solid waste |
| Method Decode: | Disposal, Other |
| Facility County: | Los Angeles |

| | |
|---|---|
| envid: | 1000292865 |
| Year: | 2004 |
| GEPAID: | CAD008337099 |
| Contact: | MICHAEL MOONE/TECH DIRECTOR |
| Telephone: | 8182408144 |
| Mailing Name: | Not reported |
| Mailing Address: | 711 W BROADWAY |
| Mailing City,St,Zip: | GLENDALE, CA 912041009 |
| Gen County: | Not reported |
| TSD EPA ID: | NVT330010000 |
| TSD County: | Not reported |
| Waste Category: | Other inorganic solid waste |
| Disposal Method: | Disposal, Other |

**DRILUBE CO (Continued)** **1000292865**

| | |
|---|---|
| Tons: | 0.6 |
| Cat Decode: | Other inorganic solid waste |
| Method Decode: | Disposal, Other |
| Facility County: | Los Angeles |

| | |
|---|---|
| envid: | 1000292865 |
| Year: | 2004 |
| GEPAID: | CAD008337099 |
| Contact: | MICHAEL MOONE/TECH DIRECTOR |
| Telephone: | 8182408144 |
| Mailing Name: | Not reported |
| Mailing Address: | 711 W BROADWAY |
| Mailing City,St,Zip: | GLENDALE, CA 912041009 |
| Gen County: | Not reported |
| TSD EPA ID: | NVT330010000 |
| TSD County: | Not reported |
| Waste Category: | Other inorganic solid waste |
| Disposal Method: | Disposal, Land Fill |
| Tons: | 25.28 |
| Cat Decode: | Other inorganic solid waste |
| Method Decode: | Disposal, Land Fill |
| Facility County: | Los Angeles |

| | |
|---|---|
| envid: | 1000292865 |
| Year: | 2004 |
| GEPAID: | CAD008337099 |
| Contact: | MICHAEL MOONE/TECH DIRECTOR |
| Telephone: | 8182408144 |
| Mailing Name: | Not reported |
| Mailing Address: | 711 W BROADWAY |
| Mailing City,St,Zip: | GLENDALE, CA 912041009 |
| Gen County: | Not reported |
| TSD EPA ID: | CAT080013352 |
| TSD County: | Not reported |
| Waste Category: | Oil/water separation sludge |
| Disposal Method: | Recycler |
| Tons: | 0.37 |
| Cat Decode: | Oil/water separation sludge |
| Method Decode: | Recycler |
| Facility County: | Los Angeles |

| | |
|---|---|
| envid: | 1000292865 |
| Year: | 2004 |
| GEPAID: | CAD008337099 |
| Contact: | MICHAEL MOONE/TECH DIRECTOR |
| Telephone: | 8182408144 |
| Mailing Name: | Not reported |
| Mailing Address: | 711 W BROADWAY |
| Mailing City,St,Zip: | GLENDALE, CA 912041009 |
| Gen County: | Not reported |
| TSD EPA ID: | CAT080013352 |
| TSD County: | Not reported |
| Waste Category: | Unspecified aqueous solution |
| Disposal Method: | Recycler |
| Tons: | 0.91 |
| Cat Decode: | Unspecified aqueous solution |
| Method Decode: | Recycler |

**DRILUBE CO (Continued)** **1000292865**

Facility County: Los Angeles

Click this hyperlink while viewing on your computer to access
101 additional CA_HAZNET: record(s) in the EDR Site Report.

WIP:
Region: 4
File Number: 113.0165
**File Status: Active**
Staff: MZAIDI
Facility Suite: Not reported

ECHO:
Envid: 1000292865
Registry ID: 110000476672
DFR URL: http://echo.epa.gov/detailed_facility_report?fid=110000476672

---

**AB165** **KEN'S BROACHING** **ENVIROSTOR** **S101480860**
**SE** **702 WEST BROADWAY** **N/A**
**1/2-1** **GLENDALE, CA 91204**
**0.677 mi.**
**3577 ft.** **Site 3 of 3 in cluster AB**

**Relative:**
**Higher**

**Actual:**
**477 ft.**

ENVIROSTOR:
Facility ID: 19350447
Status: No Further Action
Status Date: 12/03/1990
Site Code: 300259
Site Type: Historical
Site Type Detailed: * Historical
Acres: 0.01
NPL: NO
Regulatory Agencies: NONE SPECIFIED
Lead Agency: NONE SPECIFIED
Program Manager: Not reported
Supervisor: * Mmonroy
Division Branch: Cleanup Chatsworth
Assembly: 43
Senate: 25
Special Program: Not reported
Restricted Use: NO
Site Mgmt Req: NONE SPECIFIED
Funding: Not reported
Latitude: 34.14666
Longitude: -118.2688
APN: NONE SPECIFIED
Past Use: ILLEGAL DUMPING
Potential COC: TPH-MOTOR OIL
Confirmed COC: 3002502-NO
Potential Description: SOIL
Alias Name: 300259
Alias Type: Project Code (Site Code)
Alias Name: 19350447
Alias Type: Envirostor ID Number

Completed Info:
Completed Area Name: PROJECT WIDE

**KEN'S BROACHING (Continued)** **S101480860**

Completed Sub Area Name: Not reported
Completed Document Type: Site Screening
Completed Date: 10/25/1994
Comments: Database verification project confirms NFA for DTSC.

Completed Area Name: PROJECT WIDE
Completed Sub Area Name: Not reported
Completed Document Type: Preliminary Assessment Report
Completed Date: 10/16/1990
Comments: Not reported

Completed Area Name: PROJECT WIDE
Completed Sub Area Name: Not reported
Completed Document Type: Preliminary Assessment Report
Completed Date: 10/16/1990
Comments: PRELIM ASSESS DONE PRELIMINARY ENDANGERMENT ASSESSMENT COMPLETED. RECOMMEND NO FURTHER ACTION DUE TO REMOVAL OF HAZARD -- DRUMS AND STAINED PAVEMENT. SOILS HAVE BEEN GRADED AND A TWO-STORY PARKING STRUCTURE NOW STANDS ON THE PROPERTY.

Completed Area Name: PROJECT WIDE
Completed Sub Area Name: Not reported
Completed Document Type: Site Screening
Completed Date: 10/04/1990
Comments: SITE SCREENING DONE RECOMMEND MEDIUM PRIORITY PRELIMINARY ENDANGERMENT ASSESSMENT.

Completed Area Name: PROJECT WIDE
Completed Sub Area Name: Not reported
Completed Document Type: Site Screening
Completed Date: 11/13/1986
Comments: SITE SCREENING DONE RATIONALE - RECORD SEARCH REQ

Completed Area Name: PROJECT WIDE
Completed Sub Area Name: Not reported
Completed Document Type: * Discovery
Completed Date: 04/08/1983
Comments: FACILITY IDENTIFIED ID FROM DRIVE-BYS IN VICINITY. FACILITY DRIVE-BY DRUMS ADJ TO BLDG. STAINED PAVEMENT

Future Area Name: Not reported
Future Sub Area Name: Not reported
Future Document Type: Not reported
Future Due Date: Not reported
Schedule Area Name: Not reported
Schedule Sub Area Name: Not reported
Schedule Document Type: Not reported
Schedule Due Date: Not reported
Schedule Revised Date: Not reported

| | | | |
|---|---|---|---|
| **AC166** | **MEPCO CENTRALAB INC. PHILIPS COMPONENTS** | **RCRA-SQG** | **1000419137** |
| **SSE** | **4561 COLORADO BLVD.** | **ENVIROSTOR** | **CAD083776732** |
| **1/2-1** | **LOS ANGELES, CA 90039** | **LUST** | |
| **0.772 mi.** | | **SWEEPS UST** | |
| **4078 ft.** | **Site 1 of 2 in cluster AC** | **HIST UST** | |
| | | **CA FID UST** | |
| **Relative:** | | **FINDS** | |
| **Lower** | | **EMI** | |
| | | **HAZNET** | |
| **Actual:** | | **HIST CORTESE** | |
| **431 ft.** | | **ECHO** | |

RCRA-SQG:

| | |
|---|---|
| Date form received by agency: | 09/01/1996 |
| Facility name: | CENTRALAB INC |
| Facility address: | 4561 COLORADO BLVD<br>LOS ANGELES, CA 90039 |
| EPA ID: | CAD083776732 |
| Mailing address: | 5855 NORTH GLEN PARK ROAD<br>MILWAUKEE, WI 53209 |
| Contact: | Not reported |
| Contact address: | Not reported<br>Not reported |
| Contact country: | US |
| Contact telephone: | Not reported |
| Contact email: | Not reported |
| EPA Region: | 09 |
| Land type: | Facility is not located on Indian land. Additional information is not known. |
| Classification: | Small Small Quantity Generator |
| Description: | Handler: generates more than 100 and less than 1000 kg of hazardous waste during any calendar month and accumulates less than 6000 kg of hazardous waste at any time; or generates 100 kg or less of hazardous waste during any calendar month, and accumulates more than 1000 kg of hazardous waste at any time |

Owner/Operator Summary:

| | |
|---|---|
| Owner/operator name: | MASSACHUSETTS MUTUAL LIFE INS CO |
| Owner/operator address: | NOT REQUIRED<br>NOT REQUIRED, ME 99999 |
| Owner/operator country: | Not reported |
| Owner/operator telephone: | (415) 555-1212 |
| Legal status: | Private |
| Owner/Operator Type: | Owner |
| Owner/Op start date: | Not reported |
| Owner/Op end date: | Not reported |
| | |
| Owner/operator name: | NOT REQUIRED |
| Owner/operator address: | NOT REQUIRED<br>NOT REQUIRED, ME 99999 |
| Owner/operator country: | Not reported |
| Owner/operator telephone: | (415) 555-1212 |
| Legal status: | Private |
| Owner/Operator Type: | Operator |
| Owner/Op start date: | Not reported |
| Owner/Op end date: | Not reported |

Handler Activities Summary:

U.S. importer of hazardous waste: No

**MEPCO CENTRALAB INC. PHILIPS COMPONENTS (Continued)** **1000419137**

Mixed waste (haz. and radioactive): No
Recycler of hazardous waste: No
Transporter of hazardous waste: No
Treater, storer or disposer of HW: No
Underground injection activity: No
On-site burner exemption: No
Furnace exemption: No
Used oil fuel burner: No
Used oil processor: No
User oil refiner: No
Used oil fuel marketer to burner: No
Used oil Specification marketer: No
Used oil transfer facility: No
Used oil transporter: No

Historical Generators:
Date form received by agency: 09/01/1996
Site name: CENTRALAB INC
Classification: Small Quantity Generator

Date form received by agency: 03/30/1994
Site name: PHILIPS COMPONENTS
Classification: Large Quantity Generator

Date form received by agency: 03/24/1992
Site name: PHILIPS COMPONENTS
Classification: Large Quantity Generator

Date form received by agency: 04/05/1990
Site name: PHILLIPS COMPONENTS
Classification: Large Quantity Generator

Date form received by agency: 08/18/1980
Site name: CENTRALAB INC
Classification: Not a generator, verified

Violation Status: No violations found

Evaluation Action Summary:
Evaluation date: 01/14/1994
Evaluation: COMPLIANCE EVALUATION INSPECTION ON-SITE
Area of violation: Not reported
Date achieved compliance: Not reported
Evaluation lead agency: EPA

ENVIROSTOR:
Facility ID: 19360522
Status: Refer: RWQCB
Status Date: 04/11/1995
Site Code: Not reported
Site Type: Historical
Site Type Detailed: * Historical
Acres: Not reported
NPL: NO
Regulatory Agencies: NONE SPECIFIED
Lead Agency: NONE SPECIFIED
Program Manager: Not reported

**MEPCO CENTRALAB INC. PHILIPS COMPONENTS (Continued)** **1000419137**

| | |
|---|---|
| Supervisor: | Referred - Not Assigned |
| Division Branch: | Cleanup Chatsworth |
| Assembly: | 43 |
| Senate: | 25 |
| Special Program: | Not reported |
| Restricted Use: | NO |
| Site Mgmt Req: | NONE SPECIFIED |
| Funding: | Not reported |
| Latitude: | 34.14381 |
| Longitude: | -118.2739 |
| APN: | 5593012026 |
| Past Use: | NONE SPECIFIED |
| Potential COC: | * HALOGENATED SOLVENTS * UNSPECIFIED SOLVENT MIXTURES |
| Confirmed COC: | NONE SPECIFIED |
| Potential Description: | NONE SPECIFIED |
| Alias Name: | CENTRAL LAB, INC |
| Alias Type: | Alternate Name |
| Alias Name: | 5593012026 |
| Alias Type: | APN |
| Alias Name: | CAD083776732 |
| Alias Type: | EPA Identification Number |
| Alias Name: | 19360522 |
| Alias Type: | Envirostor ID Number |

Completed Info:

| | |
|---|---|
| Completed Area Name: | PROJECT WIDE |
| Completed Sub Area Name: | Not reported |
| Completed Document Type: | Site Screening |
| Completed Date: | 02/19/1988 |
| Comments: | Site Screening Done: Recommend PA (Low) based on lack of information. |
| Completed Area Name: | PROJECT WIDE |
| Completed Sub Area Name: | Not reported |
| Completed Document Type: | * Discovery |
| Completed Date: | 04/06/1983 |
| Comments: | Facility identified via Glendale Industrial Directory 1981; Electronic Components. |
| Future Area Name: | Not reported |
| Future Sub Area Name: | Not reported |
| Future Document Type: | Not reported |
| Future Due Date: | Not reported |
| Schedule Area Name: | Not reported |
| Schedule Sub Area Name: | Not reported |
| Schedule Document Type: | Not reported |
| Schedule Due Date: | Not reported |
| Schedule Revised Date: | Not reported |

LUST:

| | |
|---|---|
| Region: | STATE |
| Global Id: | T0603700198 |
| Latitude: | 34.1416548 |
| Longitude: | -118.2718308 |
| Case Type: | LUST Cleanup Site |
| Status: | Completed - Case Closed |
| Status Date: | 11/04/1997 |
| Lead Agency: | LOS ANGELES RWQCB (REGION 4) |

**MEPCO CENTRALAB INC. PHILIPS COMPONENTS (Continued)** **1000419137**

| | |
|---|---|
| Case Worker: | WIP |
| Local Agency: | LOS ANGELES, CITY OF |
| RB Case Number: | 113.0363 |
| LOC Case Number: | Not reported |
| File Location: | Not reported |
| Potential Media Affect: | Aquifer used for drinking water supply |
| Potential Contaminants of Concern: | * Solvents |
| Site History: | Not reported |

Click here to access the California GeoTracker records for this facility:

Contact:

| | |
|---|---|
| Global Id: | T0603700198 |
| Contact Type: | Regional Board Caseworker |
| Contact Name: | WELL INVESTIGATION PROGRAM |
| Organization Name: | LOS ANGELES RWQCB (REGION 4) |
| Address: | 320 W. 4TH ST., SUITE 200 |
| City: | LOS ANGELES |
| Email: | Not reported |
| Phone Number: | Not reported |

| | |
|---|---|
| Global Id: | T0603700198 |
| Contact Type: | Local Agency Caseworker |
| Contact Name: | ELOY LUNA |
| Organization Name: | LOS ANGELES, CITY OF |
| Address: | 200 North Main Street, Suite 1780 |
| City: | LOS ANGELES |
| Email: | eloy.luna@lacity.org |
| Phone Number: | Not reported |

Status History:

| | |
|---|---|
| Global Id: | T0603700198 |
| Status: | Completed - Case Closed |
| Status Date: | 11/04/1997 |

| | |
|---|---|
| Global Id: | T0603700198 |
| Status: | Open - Case Begin Date |
| Status Date: | 12/10/1984 |

| | |
|---|---|
| Global Id: | T0603700198 |
| Status: | Open - Site Assessment |
| Status Date: | 12/12/1988 |

Regulatory Activities:

| | |
|---|---|
| Global Id: | T0603700198 |
| Action Type: | Other |
| Date: | 12/10/1984 |
| Action: | Leak Reported |

SWEEPS UST:

| | |
|---|---|
| Status: | Not reported |
| Comp Number: | 2180 |
| Number: | Not reported |
| Board Of Equalization: | 44-012163 |
| Referral Date: | Not reported |

**MEPCO CENTRALAB INC. PHILIPS COMPONENTS (Continued)** **1000419137**

| | |
|---|---|
| Action Date: | Not reported |
| Created Date: | Not reported |
| Owner Tank Id: | Not reported |
| SWRCB Tank Id: | 19-050-002180-000001 |
| Tank Status: | Not reported |
| Capacity: | 5000 |
| Active Date: | Not reported |
| Tank Use: | CHEMICAL |
| STG: | PRODUCT |
| Content: | UNKNOWN |
| Number Of Tanks: | 8 |

| | |
|---|---|
| Status: | Not reported |
| Comp Number: | 2180 |
| Number: | Not reported |
| Board Of Equalization: | 44-012163 |
| Referral Date: | Not reported |
| Action Date: | Not reported |
| Created Date: | Not reported |
| Owner Tank Id: | Not reported |
| SWRCB Tank Id: | 19-050-002180-000002 |
| Tank Status: | Not reported |
| Capacity: | 3000 |
| Active Date: | Not reported |
| Tank Use: | CHEMICAL |
| STG: | PRODUCT |
| Content: | UNKNOWN |
| Number Of Tanks: | Not reported |

| | |
|---|---|
| Status: | Not reported |
| Comp Number: | 2180 |
| Number: | Not reported |
| Board Of Equalization: | 44-012163 |
| Referral Date: | Not reported |
| Action Date: | Not reported |
| Created Date: | Not reported |
| Owner Tank Id: | Not reported |
| SWRCB Tank Id: | 19-050-002180-000003 |
| Tank Status: | Not reported |
| Capacity: | 3000 |
| Active Date: | Not reported |
| Tank Use: | CHEMICAL |
| STG: | PRODUCT |
| Content: | UNKNOWN |
| Number Of Tanks: | Not reported |

| | |
|---|---|
| Status: | Not reported |
| Comp Number: | 2180 |
| Number: | Not reported |
| Board Of Equalization: | 44-012163 |
| Referral Date: | Not reported |
| Action Date: | Not reported |
| Created Date: | Not reported |
| Owner Tank Id: | Not reported |
| SWRCB Tank Id: | 19-050-002180-000004 |
| Tank Status: | Not reported |
| Capacity: | 8000 |

**MEPCO CENTRALAB INC. PHILIPS COMPONENTS (Continued)** **1000419137**

| | |
|---|---|
| Active Date: | Not reported |
| Tank Use: | M.V. FUEL |
| STG: | PRODUCT |
| Content: | DIESEL |
| Number Of Tanks: | Not reported |

| | |
|---|---|
| Status: | Not reported |
| Comp Number: | 2180 |
| Number: | Not reported |
| Board Of Equalization: | 44-012163 |
| Referral Date: | Not reported |
| Action Date: | Not reported |
| Created Date: | Not reported |
| Owner Tank Id: | Not reported |
| SWRCB Tank Id: | 19-050-002180-000005 |
| Tank Status: | Not reported |
| Capacity: | 500 |
| Active Date: | Not reported |
| Tank Use: | M.V. FUEL |
| STG: | PRODUCT |
| Content: | DIESEL |
| Number Of Tanks: | Not reported |

| | |
|---|---|
| Status: | Not reported |
| Comp Number: | 2180 |
| Number: | Not reported |
| Board Of Equalization: | 44-012163 |
| Referral Date: | Not reported |
| Action Date: | Not reported |
| Created Date: | Not reported |
| Owner Tank Id: | Not reported |
| SWRCB Tank Id: | 19-050-002180-000006 |
| Tank Status: | Not reported |
| Capacity: | 1000 |
| Active Date: | Not reported |
| Tank Use: | CHEMICAL |
| STG: | PRODUCT |
| Content: | UNKNOWN |
| Number Of Tanks: | Not reported |

| | |
|---|---|
| Status: | Not reported |
| Comp Number: | 2180 |
| Number: | Not reported |
| Board Of Equalization: | 44-012163 |
| Referral Date: | Not reported |
| Action Date: | Not reported |
| Created Date: | Not reported |
| Owner Tank Id: | Not reported |
| SWRCB Tank Id: | 19-050-002180-000007 |
| Tank Status: | Not reported |
| Capacity: | 1000 |
| Active Date: | Not reported |
| Tank Use: | CHEMICAL |
| STG: | PRODUCT |
| Content: | UNKNOWN |
| Number Of Tanks: | Not reported |

**MEPCO CENTRALAB INC. PHILIPS COMPONENTS (Continued)** **1000419137**

| | |
|---|---|
| Status: | Not reported |
| Comp Number: | 2180 |
| Number: | Not reported |
| Board Of Equalization: | 44-012163 |
| Referral Date: | Not reported |
| Action Date: | Not reported |
| Created Date: | Not reported |
| Owner Tank Id: | Not reported |
| SWRCB Tank Id: | 19-050-002180-000008 |
| Tank Status: | Not reported |
| Capacity: | 600 |
| Active Date: | Not reported |
| Tank Use: | CHEMICAL |
| STG: | PRODUCT |
| Content: | UNKNOWN |
| Number Of Tanks: | Not reported |

HIST UST:

| | |
|---|---|
| File Number: | 00026AAA |
| URL: | http://geotracker.waterboards.ca.gov/ustpdfs/pdf/00026AAA.pdf |
| Region: | STATE |
| Facility ID: | 00000041146 |
| Facility Type: | Other |
| Other Type: | MANUFACTURING |
| Contact Name: | WADE SMITH |
| Telephone: | 8182404880 |
| Owner Name: | CENTRALAB INC./A NORTH AMERICA |
| Owner Address: | 5855 N. GLEN PARK ROAD |
| Owner City,St,Zip: | MILWAUKEE, WI |
| Total Tanks: | 0008 |

| | |
|---|---|
| Tank Num: | 001 |
| Container Num: | CRL-1 |
| Year Installed: | 1974 |
| Tank Capacity: | 00005000 |
| Tank Used for: | PRODUCT |
| Type of Fuel: | Not reported |
| Container Construction Thickness: | Not reported |
| Leak Detection: | Stock Inventor, 10 |

| | |
|---|---|
| Tank Num: | 002 |
| Container Num: | CRL-2 |
| Year Installed: | 1974 |
| Tank Capacity: | 00003000 |
| Tank Used for: | PRODUCT |
| Type of Fuel: | Not reported |
| Container Construction Thickness: | Not reported |
| Leak Detection: | Stock Inventor, 10 |

| | |
|---|---|
| Tank Num: | 003 |
| Container Num: | CRL-3 |
| Year Installed: | 1974 |
| Tank Capacity: | 00003000 |
| Tank Used for: | Not reported |
| Type of Fuel: | Not reported |
| Container Construction Thickness: | Not reported |
| Leak Detection: | None |

**MEPCO CENTRALAB INC. PHILIPS COMPONENTS (Continued)** **1000419137**

| | |
|---|---|
| Tank Num: | 004 |
| Container Num: | CRL-4 |
| Year Installed: | Not reported |
| Tank Capacity: | 00008000 |
| Tank Used for: | PRODUCT |
| Type of Fuel: | DIESEL |
| Container Construction Thickness: | Not reported |
| Leak Detection: | None |

| | |
|---|---|
| Tank Num: | 005 |
| Container Num: | CRL-5 |
| Year Installed: | Not reported |
| Tank Capacity: | 00000500 |
| Tank Used for: | PRODUCT |
| Type of Fuel: | DIESEL |
| Container Construction Thickness: | Not reported |
| Leak Detection: | None, 10 |

| | |
|---|---|
| Tank Num: | 006 |
| Container Num: | CRL-6 |
| Year Installed: | Not reported |
| Tank Capacity: | 00001000 |
| Tank Used for: | WASTE |
| Type of Fuel: | Not reported |
| Container Construction Thickness: | Not reported |
| Leak Detection: | Visual |

| | |
|---|---|
| Tank Num: | 007 |
| Container Num: | CRL-7 |
| Year Installed: | Not reported |
| Tank Capacity: | 00001000 |
| Tank Used for: | WASTE |
| Type of Fuel: | Not reported |
| Container Construction Thickness: | Not reported |
| Leak Detection: | None |

| | |
|---|---|
| Tank Num: | 008 |
| Container Num: | CRL-8 |
| Year Installed: | Not reported |
| Tank Capacity: | 00000600 |
| Tank Used for: | WASTE |
| Type of Fuel: | Not reported |
| Container Construction Thickness: | Not reported |
| Leak Detection: | None |

Click here for Geo Tracker PDF:

CA FID UST:

| | |
|---|---|
| Facility ID: | 19001061 |
| Regulated By: | UTNKI |
| Regulated ID: | 00041146 |
| Cortese Code: | Not reported |
| SIC Code: | Not reported |
| Facility Phone: | 8182404880 |
| Mail To: | Not reported |
| Mailing Address: | 5855 N GLEN PARK RD |
| Mailing Address 2: | Not reported |

**MEPCO CENTRALAB INC. PHILIPS COMPONENTS (Continued)** **1000419137**

| | |
|---|---|
| Mailing City,St,Zip: | LOS ANGELES 900390000 |
| Contact: | Not reported |
| Contact Phone: | Not reported |
| DUNs Number: | Not reported |
| NPDES Number: | Not reported |
| EPA ID: | Not reported |
| Comments: | Not reported |
| Status: | Inactive |

FINDS:

Registry ID: 110002139132

Environmental Interest/Information System

US EPA TRIS (Toxics Release Inventory System) contains information from facilities on the amounts of over 300 listed toxic chemicals that these facilities release directly to air, water, land, or that are transported off-site.

RCRAInfo is a national information system that supports the Resource Conservation and Recovery Act (RCRA) program through the tracking of events and activities related to facilities that generate, transport, and treat, store, or dispose of hazardous waste. RCRAInfo allows RCRA program staff to track the notification, permit, compliance, and corrective action activities required under RCRA.

HAZARDOUS AIR POLLUTANT MAJOR

EMI:

| | |
|---|---|
| Year: | 1987 |
| County Code: | 19 |
| Air Basin: | SC |
| Facility ID: | 36792 |
| Air District Name: | SC |
| SIC Code: | 3264 |
| Air District Name: | SOUTH COAST AQMD |
| Community Health Air Pollution Info System: | Not reported |
| Consolidated Emission Reporting Rule: | Not reported |
| Total Organic Hydrocarbon Gases Tons/Yr: | 0 |
| Reactive Organic Gases Tons/Yr: | 0 |
| Carbon Monoxide Emissions Tons/Yr: | 0 |
| NOX - Oxides of Nitrogen Tons/Yr: | 0 |
| SOX - Oxides of Sulphur Tons/Yr: | 0 |
| Particulate Matter Tons/Yr: | 0 |
| Part. Matter 10 Micrometers and Smllr Tons/Yr: | 0 |

| | |
|---|---|
| Year: | 1990 |
| County Code: | 19 |
| Air Basin: | SC |
| Facility ID: | 36792 |
| Air District Name: | SC |
| SIC Code: | 3264 |
| Air District Name: | SOUTH COAST AQMD |
| Community Health Air Pollution Info System: | Not reported |
| Consolidated Emission Reporting Rule: | Not reported |

**MEPCO CENTRALAB INC. PHILIPS COMPONENTS (Continued)** **1000419137**

| | |
|---|---|
| Total Organic Hydrocarbon Gases Tons/Yr: | 85 |
| Reactive Organic Gases Tons/Yr: | 54 |
| Carbon Monoxide Emissions Tons/Yr: | 1 |
| NOX - Oxides of Nitrogen Tons/Yr: | 2 |
| SOX - Oxides of Sulphur Tons/Yr: | 0 |
| Particulate Matter Tons/Yr: | 0 |
| Part. Matter 10 Micrometers and Smllr Tons/Yr: | 0 |

| | |
|---|---|
| Year: | 1995 |
| County Code: | 19 |
| Air Basin: | SC |
| Facility ID: | 36792 |
| Air District Name: | SC |
| SIC Code: | 3264 |
| Air District Name: | SOUTH COAST AQMD |
| Community Health Air Pollution Info System: | Not reported |
| Consolidated Emission Reporting Rule: | Not reported |
| Total Organic Hydrocarbon Gases Tons/Yr: | 7 |
| Reactive Organic Gases Tons/Yr: | 0 |
| Carbon Monoxide Emissions Tons/Yr: | 0 |
| NOX - Oxides of Nitrogen Tons/Yr: | 0 |
| SOX - Oxides of Sulphur Tons/Yr: | 0 |
| Particulate Matter Tons/Yr: | 0 |
| Part. Matter 10 Micrometers and Smllr Tons/Yr: | 0 |

HAZNET:

| | |
|---|---|
| envid: | 1000419137 |
| Year: | 1995 |
| GEPAID: | CAD083776732 |
| Contact: | NORTH AMERICAN PHILLIPS CORPOR |
| Telephone: | 2128505000 |
| Mailing Name: | Not reported |
| Mailing Address: | 4561 COLORADO BLVD |
| Mailing City,St,Zip: | LOS ANGELES, CA 900390000 |
| Gen County: | Not reported |
| TSD EPA ID: | CAT000646117 |
| TSD County: | Not reported |
| Waste Category: | Other inorganic solid waste |
| Disposal Method: | Disposal, Other |
| Tons: | .0875 |
| Cat Decode: | Other inorganic solid waste |
| Method Decode: | Disposal, Other |
| Facility County: | Los Angeles |

| | |
|---|---|
| envid: | 1000419137 |
| Year: | 1995 |
| GEPAID: | CAD083776732 |
| Contact: | NORTH AMERICAN PHILLIPS CORPOR |
| Telephone: | 2128505000 |
| Mailing Name: | Not reported |
| Mailing Address: | 4561 COLORADO BLVD |
| Mailing City,St,Zip: | LOS ANGELES, CA 900390000 |
| Gen County: | Not reported |
| TSD EPA ID: | AZD983473539 |
| TSD County: | Not reported |
| Waste Category: | Polychlorinated biphenyls and material containing PCBs |
| Disposal Method: | Recycler |

**MEPCO CENTRALAB INC. PHILIPS COMPONENTS (Continued)** **1000419137**

| | |
|---|---|
| Tons: | 1.3521 |
| Cat Decode: | Polychlorinated biphenyls and material containing PCBs |
| Method Decode: | Recycler |
| Facility County: | Los Angeles |

| | |
|---|---|
| envid: | 1000419137 |
| Year: | 1995 |
| GEPAID: | CAD083776732 |
| Contact: | NORTH AMERICAN PHILLIPS CORPOR |
| Telephone: | 2128505000 |
| Mailing Name: | Not reported |
| Mailing Address: | 4561 COLORADO BLVD |
| Mailing City,St,Zip: | LOS ANGELES, CA 900390000 |
| Gen County: | Not reported |
| TSD EPA ID: | CAT000646117 |
| TSD County: | Not reported |
| Waste Category: | Other inorganic solid waste |
| Disposal Method: | Not reported |
| Tons: | .0875 |
| Cat Decode: | Other inorganic solid waste |
| Method Decode: | Not reported |
| Facility County: | Los Angeles |

| | |
|---|---|
| envid: | 1000419137 |
| Year: | 1994 |
| GEPAID: | CAD083776732 |
| Contact: | NORTH AMERICAN PHILLIPS CORPOR |
| Telephone: | 2128505000 |
| Mailing Name: | Not reported |
| Mailing Address: | 4561 COLORADO BLVD |
| Mailing City,St,Zip: | LOS ANGELES, CA 900390000 |
| Gen County: | Not reported |
| TSD EPA ID: | CAT080014079 |
| TSD County: | Not reported |
| Waste Category: | Liquids with halogenated organic compounds >= 1,000 Mg./L |
| Disposal Method: | Transfer Station |
| Tons: | .4170 |
| Cat Decode: | Liquids with halogenated organic compounds >= 1,000 Mg./L |
| Method Decode: | Transfer Station |
| Facility County: | Los Angeles |

| | |
|---|---|
| envid: | 1000419137 |
| Year: | 1994 |
| GEPAID: | CAD083776732 |
| Contact: | NORTH AMERICAN PHILLIPS CORPOR |
| Telephone: | 2128505000 |
| Mailing Name: | Not reported |
| Mailing Address: | 4561 COLORADO BLVD |
| Mailing City,St,Zip: | LOS ANGELES, CA 900390000 |
| Gen County: | Not reported |
| TSD EPA ID: | CAD009007626 |
| TSD County: | Not reported |
| Waste Category: | Asbestos containing waste |
| Disposal Method: | Disposal, Land Fill |
| Tons: | 66.5812 |
| Cat Decode: | Asbestos containing waste |
| Method Decode: | Disposal, Land Fill |

**MEPCO CENTRALAB INC. PHILIPS COMPONENTS (Continued)** **1000419137**

Facility County: Los Angeles

Click this hyperlink while viewing on your computer to access
3 additional CA_HAZNET: record(s) in the EDR Site Report.

HIST CORTESE:

| | |
|---|---|
| Region: | CORTESE |
| Facility County Code: | 19 |
| Reg By: | LTNKA |
| Reg Id: | 113.0363 |

ECHO:

| | |
|---|---|
| Envid: | 1000419137 |
| Registry ID: | 110002139132 |
| DFR URL: | http://echo.epa.gov/detailed_facility_report?fid=110002139132 |

---

**AC167** **CENTRALAB** **CHMIRS** **S100833476**
**SSE** **4561 COLORADO BLVD.** **CA BOND EXP. PLAN** **N/A**
**1/2-1** **LOS ANGELES, CA 90039**
**0.772 mi.**
**4078 ft.** **Site 2 of 2 in cluster AC**

**Relative:**
**Lower**

**Actual:**
**431 ft.**

CHMIRS:

| | |
|---|---|
| OES Incident Number: | 2-0327 |
| OES notification: | 01/17/2002 |
| OES Date: | Not reported |
| OES Time: | Not reported |
| **Date Completed:** | **Not reported** |
| Property Use: | Not reported |
| Agency Id Number: | Not reported |
| Agency Incident Number: | Not reported |
| Time Notified: | Not reported |
| Time Completed: | Not reported |
| Surrounding Area: | Not reported |
| Estimated Temperature: | Not reported |
| Property Management: | Not reported |
| More Than Two Substances Involved?: | Not reported |
| Resp Agncy Personel # Of Decontaminated: | Not reported |
| Responding Agency Personel # Of Injuries: | Not reported |
| Responding Agency Personel # Of Fatalities: | Not reported |
| Others Number Of Decontaminated: | Not reported |
| Others Number Of Injuries: | Not reported |
| Others Number Of Fatalities: | Not reported |
| Vehicle Make/year: | Not reported |
| Vehicle License Number: | Not reported |
| Vehicle State: | Not reported |
| Vehicle Id Number: | Not reported |
| CA DOT PUC/ICC Number: | Not reported |
| Company Name: | Not reported |
| Reporting Officer Name/ID: | Not reported |
| Report Date: | Not reported |
| Facility Telephone: | Not reported |
| Waterway Involved: | Yes |
| Waterway: | Storm Drain |
| Spill Site: | Not reported |
| Cleanup By: | Reporting Party |
| Containment: | Not reported |

**CENTRALAB (Continued)** **S100833476**

| | |
|---|---|
| What Happened: | Not reported |
| Type: | Not reported |
| Measure: | Not reported |
| Other: | Not reported |
| Date/Time: | Not reported |
| Year: | 2002 |
| Agency: | City of Los Angeles |
| Incident Date: | 1/17/200212:00:00 AM |
| Admin Agency: | Los Angeles City Fire Department |
| Amount: | Not reported |
| Contained: | Yes |
| Site Type: | Merchant/Business |
| E Date: | Not reported |
| Substance: | Sewage |
| Gallons: | 1700 |
| Unknown: | 0 |
| Substance #2: | Not reported |
| Substance #3: | Not reported |
| Evacuations: | 0 |
| Number of Injuries: | 0 |
| Number of Fatalities: | 0 |
| #1 Pipeline: | Not reported |
| #2 Pipeline: | Not reported |
| #3 Pipeline: | Not reported |
| #1 Vessel >= 300 Tons: | Not reported |
| #2 Vessel >= 300 Tons: | Not reported |
| #3 Vessel >= 300 Tons: | Not reported |
| Evacs: | Not reported |
| Injuries: | Not reported |
| Fatals: | Not reported |
| Comments: | Not reported |
| Description: | Per caller, a broken private connection caused the release. 1600 gallons recovered and returned to the system and 100 gallons went into the storm drain which empties into the Los Angeles River. |

CA BOND EXP. PLAN:

| | |
|---|---|
| Reponsible Party: | RWQCB REFERRAL SITE |
| Project Revenue Source Company: | Not reported |
| Project Revenue Source Addr: | Not reported |
| Project Revenue Source City,St,Zip: | Not reported |
| Project Revenue Source Desc: | The responsible party is providing for the remediation of the site under RWQCB lead. The RP will pay all costs associated with site cleanup. There are no current plans for expenditure of Bond funds for the site. |
| Site Description: | The site comprises seven acres where ceramic capacitors have been manufactured. Organic solvents have contaminated subsurface soil and ground water. |
| Hazardous Waste Desc: | Trichloroethylene (TCE), 1,1,1-trichloroethane (TCA), and methylene chloride have been detected in soil and ground water. |
| Threat To Public Health & Env: | The site is in an industrial area. Leaking underground tanks have been removed. The primary threat to the public health and environment is from the potential migration of contaminants to ground water. |
| Site Activity Status: | The Regional Water Quality Control Board (RWQCB) has overseen the removal of underground tanks. A site investigation with focus on ground water is under way under RWQCB lead. |

| | | | |
|---|---|---|---|
| **168** | **GCG CORP.** | **ENVIROSTOR** | **S106484742** |
| **WNW** | **608 RUBERTA AV** | **SLIC** | **N/A** |
| **1/2-1** | **GLENDALE, CA 91201** | **EMI** | |
| **0.839 mi.** | | **ENF** | |
| **4432 ft.** | | **NPDES** | |

**Relative:**
**Higher**

**Actual:**
**481 ft.**

ENVIROSTOR:

| | |
|---|---|
| Facility ID: | 71002489 |
| Status: | Refer: Other Agency |
| Status Date: | Not reported |
| Site Code: | Not reported |
| Site Type: | Tiered Permit |
| Site Type Detailed: | Tiered Permit |
| Acres: | Not reported |
| NPL: | NO |
| Regulatory Agencies: | NONE SPECIFIED |
| Lead Agency: | NONE SPECIFIED |
| Program Manager: | Not reported |
| Supervisor: | Not reported |
| Division Branch: | Cleanup Chatsworth |
| Assembly: | 43 |
| Senate: | 25 |
| Special Program: | Not reported |
| Restricted Use: | NO |
| Site Mgmt Req: | NONE SPECIFIED |
| Funding: | Not reported |
| Latitude: | 34.16250 |
| Longitude: | -118.2931 |
| APN: | NONE SPECIFIED |
| Past Use: | NONE SPECIFIED |
| Potential COC: | NONE SPECIFIED |
| Confirmed COC: | NONE SPECIFIED |
| Potential Description: | NONE SPECIFIED |
| Alias Name: | CAD059240663 |
| Alias Type: | EPA Identification Number |
| Alias Name: | 110000782715 |
| Alias Type: | EPA (FRS #) |
| Alias Name: | 71002489 |
| Alias Type: | Envirostor ID Number |

Completed Info:

| | |
|---|---|
| Completed Area Name: | Not reported |
| Completed Sub Area Name: | Not reported |
| Completed Document Type: | Not reported |
| Completed Date: | Not reported |
| Comments: | Not reported |
| Future Area Name: | Not reported |
| Future Sub Area Name: | Not reported |
| Future Document Type: | Not reported |
| Future Due Date: | Not reported |
| Schedule Area Name: | Not reported |
| Schedule Sub Area Name: | Not reported |
| Schedule Document Type: | Not reported |
| Schedule Due Date: | Not reported |
| Schedule Revised Date: | Not reported |

SLIC:

| | |
|---|---|
| Region: | STATE |

**GCG CORP. (Continued)** **S106484742**

| | |
|---|---|
| **Facility Status:** | **Completed - Case Closed** |
| Status Date: | 09/16/2005 |
| Global Id: | SL603798944 |
| Lead Agency: | LOS ANGELES RWQCB (REGION 4) |
| Lead Agency Case Number: | Not reported |
| Latitude: | 34.162646 |
| Longitude: | -118.292573 |
| Case Type: | Cleanup Program Site |
| Case Worker: | Not reported |
| Local Agency: | Not reported |
| RB Case Number: | 109.0671 |
| File Location: | Not reported |
| Potential Media Affected: | Aquifer used for drinking water supply |
| Potential Contaminants of Concern: | Not reported |
| Site History: | Not reported |

Click here to access the California GeoTracker records for this facility:

EMI:

| | |
|---|---|
| Year: | 1990 |
| County Code: | 19 |
| Air Basin: | SC |
| Facility ID: | 13488 |
| Air District Name: | SC |
| SIC Code: | 3471 |
| Air District Name: | SOUTH COAST AQMD |
| Community Health Air Pollution Info System: | Not reported |
| Consolidated Emission Reporting Rule: | Not reported |
| Total Organic Hydrocarbon Gases Tons/Yr: | 2 |
| Reactive Organic Gases Tons/Yr: | 0 |
| Carbon Monoxide Emissions Tons/Yr: | 0 |
| NOX - Oxides of Nitrogen Tons/Yr: | 0 |
| SOX - Oxides of Sulphur Tons/Yr: | 0 |
| Particulate Matter Tons/Yr: | 0 |
| Part. Matter 10 Micrometers and Smllr Tons/Yr: | 0 |

| | |
|---|---|
| Year: | 1993 |
| County Code: | 19 |
| Air Basin: | SC |
| Facility ID: | 13488 |
| Air District Name: | SC |
| SIC Code: | 3471 |
| Air District Name: | SOUTH COAST AQMD |
| Community Health Air Pollution Info System: | Not reported |
| Consolidated Emission Reporting Rule: | Not reported |
| Total Organic Hydrocarbon Gases Tons/Yr: | 0 |
| Reactive Organic Gases Tons/Yr: | 0 |
| Carbon Monoxide Emissions Tons/Yr: | 0 |
| NOX - Oxides of Nitrogen Tons/Yr: | 0 |
| SOX - Oxides of Sulphur Tons/Yr: | 0 |
| Particulate Matter Tons/Yr: | 0 |
| Part. Matter 10 Micrometers and Smllr Tons/Yr: | 0 |

| | |
|---|---|
| Year: | 1995 |
| County Code: | 19 |
| Air Basin: | SC |
| Facility ID: | 13488 |

**GCG CORP. (Continued)** **S106484742**

| | |
|---|---|
| Air District Name: | SC |
| SIC Code: | 3471 |
| Air District Name: | SOUTH COAST AQMD |
| Community Health Air Pollution Info System: | Not reported |
| Consolidated Emission Reporting Rule: | Not reported |
| Total Organic Hydrocarbon Gases Tons/Yr: | 0 |
| Reactive Organic Gases Tons/Yr: | 0 |
| Carbon Monoxide Emissions Tons/Yr: | 0 |
| NOX - Oxides of Nitrogen Tons/Yr: | 0 |
| SOX - Oxides of Sulphur Tons/Yr: | 0 |
| Particulate Matter Tons/Yr: | 0 |
| Part. Matter 10 Micrometers and Smllr Tons/Yr: | 0 |

ENF:

| | |
|---|---|
| Region: | 4 |
| Facility Id: | 226862 |
| Agency Name: | GCG Corporation |
| Place Type: | Manufacturing |
| Place Subtype: | Manufacturing NEC |
| Facility Type: | All other facilities |
| Agency Type: | Privately-Owned Business |
| # Of Agencies: | 1 |
| Place Latitude: | 34.1629 |
| Place Longitude: | -118.293221 |
| SIC Code 1: | 3471 |
| SIC Desc 1: | Electroplating, Plating, Polishing, Anodizing, and Coloring |
| SIC Code 2: | Not reported |
| SIC Desc 2: | Not reported |
| SIC Code 3: | Not reported |
| SIC Desc 3: | Not reported |
| NAICS Code 1: | Not reported |
| NAICS Desc 1: | Not reported |
| NAICS Code 2: | Not reported |
| NAICS Desc 2: | Not reported |
| NAICS Code 3: | Not reported |
| NAICS Desc 3: | Not reported |
| # Of Places: | 1 |
| Source Of Facility: | Reg Meas |
| Design Flow: | Not reported |
| Threat To Water Quality: | Not reported |
| Complexity: | Not reported |
| Pretreatment: | Not reported |
| Facility Waste Type: | Not reported |
| Facility Waste Type 2: | Not reported |
| Facility Waste Type 3: | Not reported |
| Facility Waste Type 4: | Not reported |
| Program: | WIP |
| Program Category1: | MONITORING |
| Program Category2: | MONITORING |
| # Of Programs: | 1 |
| WDID: | 4WIP1090671 |
| Reg Measure Id: | 158512 |
| Reg Measure Type: | Unregulated |
| Region: | 4 |
| Order #: | Not reported |
| Npdes# CA#: | Not reported |
| Major-Minor: | Not reported |

**GCG CORP. (Continued)** **S106484742**

| | |
|---|---|
| Npdes Type: | Not reported |
| Reclamation: | Not reported |
| Dredge Fill Fee: | Not reported |
| 301H: | Not reported |
| Application Fee Amt Received: | Not reported |
| Status: | Never Active |
| Status Date: | 02/20/2013 |
| Effective Date: | Not reported |
| Expiration/Review Date: | Not reported |
| Termination Date: | Not reported |
| WDR Review - Amend: | Not reported |
| WDR Review - Revise/Renew: | Not reported |
| WDR Review - Rescind: | Not reported |
| WDR Review - No Action Required: | Not reported |
| WDR Review - Pending: | Not reported |
| WDR Review - Planned: | Not reported |
| Status Enrollee: | N |
| Individual/General: | I |
| Fee Code: | Not reported |
| Direction/Voice: | Passive |
| Enforcement Id(EID): | 220937 |
| Region: | 4 |
| Order / Resolution Number: | 13267 Letter |
| Enforcement Action Type: | 13267 Letter |
| Effective Date: | 11/09/2000 |
| Adoption/Issuance Date: | Not reported |
| Achieve Date: | Not reported |
| Termination Date: | 11/09/2000 |
| ACL Issuance Date: | Not reported |
| EPL Issuance Date: | Not reported |
| Status: | Historical |
| Title: | Enforcement - 4WIP1090671 |
| Description: | Not reported |
| Program: | WIP |
| Latest Milestone Completion Date: | Not reported |
| # Of Programs1: | 1 |
| Total Assessment Amount: | $0.00 |
| Initial Assessed Amount: | $0.00 |
| Liability $ Amount: | $0.00 |
| Project $ Amount: | $0.00 |
| Liability $ Paid: | $0.00 |
| Project $ Completed: | $0.00 |
| Total $ Paid/Completed Amount: | $0.00 |

NPDES:

| | |
|---|---|
| Npdes Number: | CAS000001 |
| Facility Status: | Active |
| Agency Id: | 0 |
| Region: | 4 |
| Regulatory Measure Id: | 189381 |
| Order No: | 97-03-DWQ |
| Regulatory Measure Type: | Enrollee |
| Place Id: | Not reported |
| WDID: | 4 19I004514 |
| Program Type: | Industrial |
| Adoption Date Of Regulatory Measure: | Not reported |
| Effective Date Of Regulatory Measure: | 04/06/1992 |

**GCG CORP. (Continued)** **S106484742**

| | |
|---|---|
| Expiration Date Of Regulatory Measure: | Not reported |
| Termination Date Of Regulatory Measure: | Not reported |
| Discharge Name: | GCG Corporation |
| Discharge Address: | 608 Ruberta Ave |
| Discharge City: | Glendale |
| Discharge State: | California |
| Discharge Zip: | 91210 |
| RECEIVED DATE: | Not reported |
| PROCESSED DATE: | Not reported |
| STATUS CODE NAME: | Not reported |
| STATUS DATE: | Not reported |
| PLACE SIZE: | Not reported |
| PLACE SIZE UNIT: | Not reported |
| FACILITY CONTACT NAME: | Not reported |
| FACILITY CONTACT TITLE: | Not reported |
| FACILITY CONTACT PHONE: | Not reported |
| FACILITY CONTACT PHONE EXT: | Not reported |
| FACILITY CONTACT EMAIL: | Not reported |
| OPERATOR NAME: | Not reported |
| OPERATOR ADDRESS: | Not reported |
| OPERATOR CITY: | Not reported |
| OPERATOR STATE: | Not reported |
| OPERATOR ZIP: | Not reported |
| OPERATOR CONTACT NAME: | Not reported |
| OPERATOR CONTACT TITLE: | Not reported |
| OPERATOR CONTACT PHONE: | Not reported |
| OPERATOR CONTACT PHONE EXT: | Not reported |
| OPERATOR CONTACT EMAIL: | Not reported |
| OPERATOR TYPE: | Not reported |
| DEVELOPER NAME: | Not reported |
| DEVELOPER ADDRESS: | Not reported |
| DEVELOPER CITY: | Not reported |
| DEVELOPER STATE: | Not reported |
| DEVELOPER ZIP: | Not reported |
| DEVELOPER CONTACT NAME: | Not reported |
| DEVELOPER CONTACT TITLE: | Not reported |
| CONSTYPE LINEAR UTILITY IND: | Not reported |
| EMERGENCY PHONE NO: | Not reported |
| EMERGENCY PHONE EXT: | Not reported |
| CONSTYPE ABOVE GROUND IND: | Not reported |
| CONSTYPE BELOW GROUND IND: | Not reported |
| CONSTYPE CABLE LINE IND: | Not reported |
| CONSTYPE COMM LINE IND: | Not reported |
| CONSTYPE COMMERTIAL IND: | Not reported |
| CONSTYPE ELECTRICAL LINE IND: | Not reported |
| CONSTYPE GAS LINE IND: | Not reported |
| CONSTYPE INDUSTRIAL IND: | Not reported |
| CONSTYPE OTHER DESRIPTION: | Not reported |
| CONSTYPE OTHER IND: | Not reported |
| CONSTYPE RECONS IND: | Not reported |
| CONSTYPE RESIDENTIAL IND: | Not reported |
| CONSTYPE TRANSPORT IND: | Not reported |
| CONSTYPE UTILITY DESCRIPTION: | Not reported |
| CONSTYPE UTILITY IND: | Not reported |
| CONSTYPE WATER SEWER IND: | Not reported |
| DIR DISCHARGE USWATER IND: | Not reported |
| RECEIVING WATER NAME: | Not reported |

**GCG CORP. (Continued)** **S106484742**

| | |
|---|---|
| CERTIFIER NAME: | Not reported |
| CERTIFIER TITLE: | Not reported |
| CERTIFICATION DATE: | Not reported |
| PRIMARY SIC: | Not reported |
| SECONDARY SIC: | Not reported |
| TERTIARY SIC: | Not reported |
| | |
| Npdes Number: | Not reported |
| Facility Status: | Not reported |
| Agency Id: | Not reported |
| Region: | 4 |
| Regulatory Measure Id: | 189381 |
| Order No: | Not reported |
| Regulatory Measure Type: | Industrial |
| Place Id: | Not reported |
| WDID: | 4 19I004514 |
| Program Type: | Not reported |
| Adoption Date Of Regulatory Measure: | Not reported |
| Effective Date Of Regulatory Measure: | Not reported |
| Expiration Date Of Regulatory Measure: | Not reported |
| Termination Date Of Regulatory Measure: | Not reported |
| Discharge Name: | Not reported |
| Discharge Address: | Not reported |
| Discharge City: | Not reported |
| Discharge State: | Not reported |
| Discharge Zip: | Not reported |
| RECEIVED DATE: | 5/9/2008 |
| PROCESSED DATE: | 4/6/1992 |
| STATUS CODE NAME: | Active |
| STATUS DATE: | 11/17/2015 |
| PLACE SIZE: | 16000 |
| PLACE SIZE UNIT: | SqFt |
| FACILITY CONTACT NAME: | RAMON LUPERCIO |
| FACILITY CONTACT TITLE: | MANAGER |
| FACILITY CONTACT PHONE: | 818-247-8376 |
| FACILITY CONTACT PHONE EXT: | Not reported |
| FACILITY CONTACT EMAIL: | gcg-corp@peoplepc.com |
| OPERATOR NAME: | GCG Corporation |
| OPERATOR ADDRESS: | 608 Ruberta Ave |
| OPERATOR CITY: | Glendale |
| OPERATOR STATE: | California |
| OPERATOR ZIP: | 91210 |
| OPERATOR CONTACT NAME: | Ramon Lupercio |
| OPERATOR CONTACT TITLE: | Manager |
| OPERATOR CONTACT PHONE: | 818-247-8376 |
| OPERATOR CONTACT PHONE EXT: | Not reported |
| OPERATOR CONTACT EMAIL: | gcg-corp@peoplepc.com |
| OPERATOR TYPE: | Private Business |
| DEVELOPER NAME: | Not reported |
| DEVELOPER ADDRESS: | Not reported |
| DEVELOPER CITY: | Not reported |
| DEVELOPER STATE: | California |
| DEVELOPER ZIP: | Not reported |
| DEVELOPER CONTACT NAME: | Not reported |
| DEVELOPER CONTACT TITLE: | Not reported |
| CONSTYPE LINEAR UTILITY IND: | Not reported |
| EMERGENCY PHONE NO: | 818-521-9530 |

**GCG CORP. (Continued)** **S106484742**

| | |
|---|---|
| EMERGENCY PHONE EXT: | Not reported |
| CONSTYPE ABOVE GROUND IND: | Not reported |
| CONSTYPE BELOW GROUND IND: | Not reported |
| CONSTYPE CABLE LINE IND: | Not reported |
| CONSTYPE COMM LINE IND: | Not reported |
| CONSTYPE COMMERTIAL IND: | Not reported |
| CONSTYPE ELECTRICAL LINE IND: | Not reported |
| CONSTYPE GAS LINE IND: | Not reported |
| CONSTYPE INDUSTRIAL IND: | Not reported |
| CONSTYPE OTHER DESRIPTION: | Not reported |
| CONSTYPE OTHER IND: | Not reported |
| CONSTYPE RECONS IND: | Not reported |
| CONSTYPE RESIDENTIAL IND: | Not reported |
| CONSTYPE TRANSPORT IND: | Not reported |
| CONSTYPE UTILITY DESCRIPTION: | Not reported |
| CONSTYPE UTILITY IND: | Not reported |
| CONSTYPE WATER SEWER IND: | Not reported |
| DIR DISCHARGE USWATER IND: | N |
| RECEIVING WATER NAME: | Los Angeles River |
| CERTIFIER NAME: | Ramon Lupercio |
| CERTIFIER TITLE: | Manager |
| CERTIFICATION DATE: | 26-FEB-15 |
| PRIMARY SIC: | 3471-Electroplating, Plating, Polishing, Anodizing, and Coloring |
| SECONDARY SIC: | Not reported |
| TERTIARY SIC: | Not reported |

---

**AD169** **KINNER MOTORS** **FUDS** **1007212208**
**SSE** **N/A**
**1/2-1** **GLENDALE, CA**
**0.931 mi.**
**4916 ft.** **Site 1 of 2 in cluster AD**

**Relative:**
**Higher**

**Actual:**
**474 ft.**

FUDS:

| | |
|---|---|
| Federal Facility ID: | CA9799F5320 |
| FUDS #: | J09CA0117 |
| INST ID: | 60979 |
| Facility Name: | KINNER MOTORS |
| City: | GLENDALE |
| State: | CA |
| EPA Region: | 09 |
| County: | LOS ANGELES |
| Congressional District: | 28 |
| US Army District: | Los Angeles District (SPL) |
| Fiscal Year: | 2013 |
| Telephone: | 213-452-3920 |
| NPL Status: | Not Listed |
| RAB: | Not reported |
| CTC: | 311.1000 |
| Current Owner: | Private Sector |
| Current Prog: | Not reported |
| Future Prog: | Not reported |
| Acreage: | Not reported |
| Description: | The site consists of 6.64 acres of land and improvements located on 5040 San Fernando Road, Glendale, California. Improvements include buildings and underground storage tanks. This property is current owner by a private ANCO Partnership. |
| History: | The Kinner Motors, Inc., plant was acquired in 1942 and used by the U.S. Army under contract during World War II. The U.S. acquired land |

**KINNER MOTORS (Continued)** **1007212208**

and constructed improvements in 1942 as an enlargement to the adjacent, recently U.S. acquired and previously privately owned, Kinner Motors, Inc. plant. Kinner Motors, Inc., was used by the U.S. Army during World War II for the production of tank engines under an Army ordnance contract. Three underground gasoline storage tanks with a total capacity of 17,000 gallons, two underground solvent storage tanks with a total capacity of 7,000 gallons, and a 4,000 gallon underground propane tank were installed by the U.S. Army and have not been used since the Army excessed the property in 1946. Toxic and hazardous liquids and/or wastes may be present in the underground storage tanks. Also the tanks may have leaked and contaminated the surrounding soil. The site was disposed of to a private corporation in 1946.

Latitude: -118.268997192
Longitude: 34.143798828100

---

**AD170** **KINNER MOTORS** **ENVIROSTOR** **S107736544**
**SSE** **Cortese** **N/A**
**1/2-1** **GLENDALE, CA**
**0.934 mi.**
**4931 ft.** **Site 2 of 2 in cluster AD**

**Relative:**
**Higher**

**Actual:**
**474 ft.**

ENVIROSTOR:

| | |
|---|---|
| Facility ID: | 80000163 |
| Status: | Active |
| Status Date: | 11/13/2014 |
| Site Code: | Not reported |
| Site Type: | Military Evaluation |
| Site Type Detailed: | FUDS |
| Acres: | 7 |
| NPL: | NO |
| Regulatory Agencies: | SMBRP |
| Lead Agency: | SMBRP |
| Program Manager: | Not reported |
| Supervisor: | Douglas Bautista |
| Division Branch: | Cleanup Cypress |
| Assembly: | 43 |
| Senate: | 25 |
| Special Program: | Not reported |
| Restricted Use: | NO |
| Site Mgmt Req: | NONE SPECIFIED |
| Funding: | DERA |
| Latitude: | 34.14305 |
| Longitude: | -118.2688 |
| APN: | NONE SPECIFIED |
| Past Use: | FIRING RANGE - SMALL ARMS ETC... |
| Potential COC: | Munitions Debris (MD |
| Confirmed COC: | 32000-NO |
| Potential Description: | SOIL |
| Alias Name: | CA99799F532000 |
| Alias Type: | Federal Facility ID |
| Alias Name: | J09CA0117 |
| Alias Type: | INPR |
| Alias Name: | 80000163 |
| Alias Type: | Envirostor ID Number |

Completed Info:

| | |
|---|---|
| Completed Area Name: | PROJECT WIDE |
| Completed Sub Area Name: | Not reported |

**KINNER MOTORS (Continued)** **S107736544**

| | |
|---|---|
| Completed Document Type: | Inventory Project Report (INPR) |
| Completed Date: | 12/11/1987 |
| Comments: | Not reported |
| | |
| Completed Area Name: | PROJECT WIDE |
| Completed Sub Area Name: | Not reported |
| Completed Document Type: | Site Screening |
| Completed Date: | 04/26/2016 |
| Comments: | Not reported |
| | |
| Future Area Name: | Not reported |
| Future Sub Area Name: | Not reported |
| Future Document Type: | Not reported |
| Future Due Date: | Not reported |
| Schedule Area Name: | Not reported |
| Schedule Sub Area Name: | Not reported |
| Schedule Document Type: | Not reported |
| Schedule Due Date: | Not reported |
| Schedule Revised Date: | Not reported |

CORTESE:

| | |
|---|---|
| Region: | CORTESE |
| Envirostor Id: | 80000163 |
| Site/Facility Type: | MILITARY EVALUATION |
| Cleanup Status: | ACTIVE |
| Status Date: | 11/13/2014 |
| Site Code: | Not reported |
| Latitude: | 34.143055 |
| Longitude: | -118.26888 |
| Owner: | Not reported |
| Enf Type: | Not reported |
| Swat R: | Not reported |
| Flag: | envirostor |
| Order No: | Not reported |
| Waste Discharge System No: | Not reported |
| Effective Date: | Not reported |
| Region 2: | Not reported |
| WID Id: | Not reported |
| Solid Waste Id No: | Not reported |
| Waste Management Uit Name: | Not reported |

---

**AE171** **AIR PRODUCTS & CHEMICALS INC** **ENVIROSTOR** **1000128760**
**NW** **6505 SAN FERNANDO ROAD** **N/A**
**1/2-1** **GLENDALE, CA 91202**
**0.943 mi.**
**4980 ft.** **Site 1 of 2 in cluster AE**

**Relative:**
**Higher**

**Actual:**
**508 ft.**

ENVIROSTOR:

| | |
|---|---|
| Facility ID: | 19281065 |
| Status: | No Further Action |
| Status Date: | 11/08/1994 |
| Site Code: | Not reported |
| Site Type: | Historical |
| Site Type Detailed: | * Historical |
| Acres: | 0 |
| NPL: | NO |
| Regulatory Agencies: | SMBRP |

**AIR PRODUCTS & CHEMICALS INC (Continued)** **1000128760**

| | |
|---|---|
| Lead Agency: | SMBRP |
| Program Manager: | Not reported |
| Supervisor: | * Mmonroy |
| Division Branch: | Cleanup Chatsworth |
| Assembly: | 43 |
| Senate: | 25 |
| Special Program: | * CERC2 |
| Restricted Use: | NO |
| Site Mgmt Req: | NONE SPECIFIED |
| Funding: | Not reported |
| Latitude: | 34.16722 |
| Longitude: | -118.29 |
| APN: | NONE SPECIFIED |
| Past Use: | MANUFACTURING - CHEMICALS |
| Potential COC: | TPH-gas |
| Confirmed COC: | 30025-NO |
| Potential Description: | OTH, SOIL |
| Alias Name: | GARDNER CRYOGENICS |
| Alias Type: | Alternate Name |
| Alias Name: | CAD982005282 |
| Alias Type: | EPA Identification Number |
| Alias Name: | 19281065 |
| Alias Type: | Envirostor ID Number |

Completed Info:

| | |
|---|---|
| Completed Area Name: | PROJECT WIDE |
| Completed Sub Area Name: | Not reported |
| Completed Document Type: | * Discovery |
| Completed Date: | 01/12/1983 |
| Comments: | FACILITY IDENTIFIED LA CHAM COMM DIR 1969-70. MFG INDSTR CHEM. |

| | |
|---|---|
| Completed Area Name: | PROJECT WIDE |
| Completed Sub Area Name: | Not reported |
| Completed Document Type: | Site Screening |
| Completed Date: | 11/08/1994 |
| Comments: | DATABASE VALIDATION PROGRAM CONFIRMS NFA FOR DTSC. |

| | |
|---|---|
| Completed Area Name: | PROJECT WIDE |
| Completed Sub Area Name: | Not reported |
| Completed Document Type: | Preliminary Assessment Report |
| Completed Date: | 03/31/1989 |
| Comments: | PRELIM ASSESS DONE NO FURTHER ACTION BASED ON LITTLE EVIDENCE THAT PRODUCTION OF HAZARDOUS WASTE EXISTS ON SITE |

| | |
|---|---|
| Completed Area Name: | PROJECT WIDE |
| Completed Sub Area Name: | Not reported |
| Completed Document Type: | Site Screening |
| Completed Date: | 02/22/1988 |
| Comments: | SITE SCREENING DONE PAL RECOMMENDED BASED ON LACK OF INFO. |

| | |
|---|---|
| Future Area Name: | Not reported |
| Future Sub Area Name: | Not reported |
| Future Document Type: | Not reported |
| Future Due Date: | Not reported |
| Schedule Area Name: | Not reported |
| Schedule Sub Area Name: | Not reported |
| Schedule Document Type: | Not reported |
| Schedule Due Date: | Not reported |

**AIR PRODUCTS & CHEMICALS INC (Continued)** **1000128760**

Schedule Revised Date: Not reported

---

**AE172**
**NW**
**1/2-1**
**0.994 mi.**
**5248 ft.**

**CINOVATION STUDIOS INC**
**6527 SAN FERNANDO RD**
**GLENDALE, CA 91201**

**Site 2 of 2 in cluster AE**

**ENVIROSTOR** **S113081251**
**VCP** **N/A**
**HIST UST**
**HAZNET**

**Relative:**
**Higher**

**Actual:**
**511 ft.**

ENVIROSTOR:

| | |
|---|---|
| Facility ID: | 60002252 |
| Status: | Active |
| Status Date: | 10/09/2015 |
| Site Code: | 301722 |
| Site Type: | Voluntary Cleanup |
| Site Type Detailed: | Voluntary Cleanup |
| Acres: | 1.2 |
| NPL: | NO |
| Regulatory Agencies: | SMBRP |
| Lead Agency: | SMBRP |
| Program Manager: | Sara Vela |
| Supervisor: | Javier Hinojosa |
| Division Branch: | Cleanup Chatsworth |
| Assembly: | , 43 |
| Senate: | , 25 |
| Special Program: | Voluntary Cleanup Program |
| Restricted Use: | NO |
| Site Mgmt Req: | NONE SPECIFIED |
| Funding: | Responsible Party |
| Latitude: | 34.16748 |
| Longitude: | -118.2917 |
| APN: | NONE SPECIFIED |
| Past Use: | MANUFACTURING - LUMBER/WOOD PRODUCTS, MANUFACTURING - OTHER, PAINT/DEPAINT FACILITY, RAILROAD RIGHT OF WAY |
| Potential COC: | Benzene Tetrachloroethylene (PCE Trichloroethylene (TCE Toluene Xylenes |
| Confirmed COC: | Tetrachloroethylene (PCE Trichloroethylene (TCE |
| Potential Description: | IA, OTH, SOIL, SV |
| Alias Name: | 301722 |
| Alias Type: | Project Code (Site Code) |
| Alias Name: | 60002252 |
| Alias Type: | Envirostor ID Number |

Completed Info:

| | |
|---|---|
| Completed Area Name: | PROJECT WIDE |
| Completed Sub Area Name: | Not reported |
| Completed Document Type: | Voluntary Cleanup Agreement |
| Completed Date: | 11/02/2015 |
| Comments: | Not reported |

| | |
|---|---|
| Completed Area Name: | PROJECT WIDE |
| Completed Sub Area Name: | Not reported |
| Completed Document Type: | Preliminary Endangerment Assessment Report |
| Completed Date: | 12/21/2015 |
| Comments: | Extra Space RP had meeting with DTSC to discuss moving forward with the investigation. They agreed to submit a workplan. |

| | |
|---|---|
| Completed Area Name: | PROJECT WIDE |
| Completed Sub Area Name: | Not reported |

**CINOVATION STUDIOS INC (Continued)** **S113081251**

Completed Document Type: Site Characterization Workplan
Completed Date: 03/24/2016
Comments: Not reported

Future Area Name: PROJECT WIDE
Future Sub Area Name: Not reported
Future Document Type: Site Characterization Report
Future Due Date: 2016
Schedule Area Name: Not reported
Schedule Sub Area Name: Not reported
Schedule Document Type: Not reported
Schedule Due Date: Not reported
Schedule Revised Date: Not reported

VCP:
Facility ID: 60002252
Site Type: Voluntary Cleanup
Site Type Detail: Voluntary Cleanup
Site Mgmt. Req.: NONE SPECIFIED
Acres: 1.2
National Priorities List: NO
Cleanup Oversight Agencies: SMBRP
Lead Agency: SMBRP
Lead Agency Description: DTSC - Site Cleanup Program
Project Manager: Sara Vela
Supervisor: Javier Hinojosa
Division Branch: Cleanup Chatsworth
Site Code: 301722
Assembly: , 43
Senate: , 25
Special Programs Code: Voluntary Cleanup Program
Status: Active
Status Date: 10/09/2015
Restricted Use: NO
Funding: Responsible Party
Lat/Long: 34.16748 / -118.2917
APN: NONE SPECIFIED
Past Use: MANUFACTURING - LUMBER/WOOD PRODUCTS, MANUFACTURING - OTHER, PAINT/DEPAINT FACILITY, RAILROAD RIGHT OF WAY
Potential COC: 30003, 30022, 30027, 30550, 30593
Confirmed COC: 30022,30027
Potential Description: IA, OTH, SOIL, SV
Alias Name: 301722
Alias Type: Project Code (Site Code)
Alias Name: 60002252
Alias Type: Envirostor ID Number

Completed Info:
Completed Area Name: PROJECT WIDE
Completed Sub Area Name: Not reported
Completed Document Type: Voluntary Cleanup Agreement
Completed Date: 11/02/2015
Comments: Not reported

Completed Area Name: PROJECT WIDE
Completed Sub Area Name: Not reported
Completed Document Type: Preliminary Endangerment Assessment Report

**CINOVATION STUDIOS INC (Continued)** **S113081251**

Completed Date: 12/21/2015
Comments: Extra Space RP had meeting with DTSC to discuss moving forward with the investigation. They agreed to submit a workplan.

Completed Area Name: PROJECT WIDE
Completed Sub Area Name: Not reported
Completed Document Type: Site Characterization Workplan
Completed Date: 03/24/2016
Comments: Not reported

Future Area Name: PROJECT WIDE
Future Sub Area Name: Not reported
Future Document Type: Site Characterization Report
Future Due Date: 2016
Schedule Area Name: Not reported
Schedule Sub Area Name: Not reported
Schedule Document Type: Not reported
Schedule Due Date: Not reported
Schedule Revised Date: Not reported

HIST UST:
File Number: 000282B3
URL: http://geotracker.waterboards.ca.gov/ustpdfs/pdf/000282B3.pdf
Region: Not reported
Facility ID: Not reported
Facility Type: Not reported
Other Type: Not reported
Contact Name: Not reported
Telephone: Not reported
Owner Name: Not reported
Owner Address: Not reported
Owner City,St,Zip: Not reported
Total Tanks: Not reported

Tank Num: Not reported
Container Num: Not reported
Year Installed: Not reported
Tank Capacity: Not reported
Tank Used for: Not reported
Type of Fuel: Not reported
Container Construction Thickness: Not reported
Leak Detection: Not reported

Click here for Geo Tracker PDF:

HAZNET:
envid: S113081251
Year: 2014
GEPAID: CAL000147740
Contact: CINOVATION STUDIOS
Telephone: 8182463160
Mailing Name: Not reported
Mailing Address: 6527 SAN FERNANDO RD
Mailing City,St,Zip: GLENDALE, CA 912010000
Gen County: Los Angeles
TSD EPA ID: MXC130619001

**CINOVATION STUDIOS INC (Continued)** **S113081251**

| | |
|---|---|
| TSD County: | Not reported |
| Waste Category: | Off-specification, aged or surplus organics |
| Disposal Method: | Solvents Recovery |
| Tons: | 0.065 |
| Cat Decode: | Off-specification, aged or surplus organics |
| Method Decode: | Solvents Recovery |
| Facility County: | Los Angeles |

| | |
|---|---|
| envid: | S113081251 |
| Year: | 2014 |
| GEPAID: | CAL000147740 |
| Contact: | CINOVATION STUDIOS |
| Telephone: | 8182463160 |
| Mailing Name: | Not reported |
| Mailing Address: | 6527 SAN FERNANDO RD |
| Mailing City,St,Zip: | GLENDALE, CA 912010000 |
| Gen County: | Los Angeles |
| TSD EPA ID: | MXC130619001 |
| TSD County: | Not reported |
| Waste Category: | Unspecified solvent mixture |
| Disposal Method: | Solvents Recovery |
| Tons: | 0.396 |
| Cat Decode: | Unspecified solvent mixture |
| Method Decode: | Solvents Recovery |
| Facility County: | Los Angeles |

| | |
|---|---|
| envid: | S113081251 |
| Year: | 2014 |
| GEPAID: | CAL000147740 |
| Contact: | CINOVATION STUDIOS |
| Telephone: | 8182463160 |
| Mailing Name: | Not reported |
| Mailing Address: | 6527 SAN FERNANDO RD |
| Mailing City,St,Zip: | GLENDALE, CA 912010000 |
| Gen County: | Los Angeles |
| TSD EPA ID: | AZR000501510 |
| TSD County: | 99 |
| Waste Category: | Unspecified organic liquid mixture |
| Disposal Method: | Storage, Bulking, And/Or Transfer Off Site--No Treatment/Reovery (H010-H129) Or (H131-H135) |
| Tons: | 0.051 |
| Cat Decode: | Unspecified organic liquid mixture |
| Method Decode: | Storage, Bulking, And/Or Transfer Off Site--No Treatment/Reovery (H010-H129) Or (H131-H135) |
| Facility County: | Los Angeles |

| | |
|---|---|
| envid: | S113081251 |
| Year: | 2014 |
| GEPAID: | CAL000147740 |
| Contact: | CINOVATION STUDIOS |
| Telephone: | 8182463160 |
| Mailing Name: | Not reported |
| Mailing Address: | 6527 SAN FERNANDO RD |
| Mailing City,St,Zip: | GLENDALE, CA 912010000 |
| Gen County: | Los Angeles |
| TSD EPA ID: | AZR000501510 |
| TSD County: | 99 |

**CINOVATION STUDIOS INC (Continued)** **S113081251**

| | |
|---|---|
| Waste Category: | Empty containers less than 30 gallons |
| Disposal Method: | Storage, Bulking, And/Or Transfer Off Site--No Treatment/Reovery (H010-H129) Or (H131-H135) |
| Tons: | 0.8428 |
| Cat Decode: | Empty containers less than 30 gallons |
| Method Decode: | Storage, Bulking, And/Or Transfer Off Site--No Treatment/Reovery (H010-H129) Or (H131-H135) |
| Facility County: | Los Angeles |

| | |
|---|---|
| envid: | S113081251 |
| Year: | 2014 |
| GEPAID: | CAL000147740 |
| Contact: | CINOVATION STUDIOS |
| Telephone: | 8182463160 |
| Mailing Name: | Not reported |
| Mailing Address: | 6527 SAN FERNANDO RD |
| Mailing City,St,Zip: | GLENDALE, CA 912010000 |
| Gen County: | Los Angeles |
| TSD EPA ID: | CAD008364432 |
| TSD County: | Los Angeles |
| Waste Category: | Laboratory waste chemicals |
| Disposal Method: | Fuel Blending Prior To Energy Recovery At Another Site |
| Tons: | 0.005 |
| Cat Decode: | Laboratory waste chemicals |
| Method Decode: | Fuel Blending Prior To Energy Recovery At Another Site |
| Facility County: | Los Angeles |

Click this hyperlink while viewing on your computer to access
10 additional CA_HAZNET: record(s) in the EDR Site Report.

Count: 2 records.

ORPHAN SUMMARY

| City | EDR ID | Site Name | Site Address | Zip | Database(s) |
|---|---|---|---|---|---|
| ATWATER VILLAGE | S102427280 | CHEVRON #9-5108 | 11113 SAN FERNANDO RD | 90039 | LUST |
| GLENDALE | S105628612 | PACIFIC EDISON SCHOOL | PACIFIC AVENUE/VINE STREET | 91204 | ENVIROSTOR, SCH |

# GOVERNMENT RECORDS SEARCHED / DATA CURRENCY TRACKING

To maintain currency of the following federal and state databases, EDR contacts the appropriate governmental agency on a monthly or quarterly basis, as required.

**Number of Days to Update:** Provides confirmation that EDR is reporting records that have been updated within 90 days from the date the government agency made the information available to the public.

## STANDARD ENVIRONMENTAL RECORDS

### *Federal NPL site list*

NPL: National Priority List

National Priorities List (Superfund). The NPL is a subset of CERCLIS and identifies over 1,200 sites for priority cleanup under the Superfund Program. NPL sites may encompass relatively large areas. As such, EDR provides polygon coverage for over 1,000 NPL site boundaries produced by EPA's Environmental Photographic Interpretation Center (EPIC) and regional EPA offices.

Date of Government Version: 03/07/2016
Date Data Arrived at EDR: 04/05/2016
Date Made Active in Reports: 04/15/2016
Number of Days to Update: 10

Source: EPA
Telephone: N/A
Last EDR Contact: 04/05/2016
Next Scheduled EDR Contact: 04/18/2016
Data Release Frequency: Quarterly

NPL Site Boundaries

Sources:

EPA's Environmental Photographic Interpretation Center (EPIC)
Telephone: 202-564-7333

EPA Region 1
Telephone 617-918-1143

EPA Region 6
Telephone: 214-655-6659

EPA Region 3
Telephone 215-814-5418

EPA Region 7
Telephone: 913-551-7247

EPA Region 4
Telephone 404-562-8033

EPA Region 8
Telephone: 303-312-6774

EPA Region 5
Telephone 312-886-6686

EPA Region 9
Telephone: 415-947-4246

EPA Region 10
Telephone 206-553-8665

Proposed NPL: Proposed National Priority List Sites

A site that has been proposed for listing on the National Priorities List through the issuance of a proposed rule in the Federal Register. EPA then accepts public comments on the site, responds to the comments, and places on the NPL those sites that continue to meet the requirements for listing.

Date of Government Version: 03/07/2016
Date Data Arrived at EDR: 04/05/2016
Date Made Active in Reports: 04/15/2016
Number of Days to Update: 10

Source: EPA
Telephone: N/A
Last EDR Contact: 04/05/2016
Next Scheduled EDR Contact: 04/18/2016
Data Release Frequency: Quarterly

NPL LIENS: Federal Superfund Liens

Federal Superfund Liens. Under the authority granted the USEPA by CERCLA of 1980, the USEPA has the authority to file liens against real property in order to recover remedial action expenditures or when the property owner received notification of potential liability. USEPA compiles a listing of filed notices of Superfund Liens.

Date of Government Version: 10/15/1991
Date Data Arrived at EDR: 02/02/1994
Date Made Active in Reports: 03/30/1994
Number of Days to Update: 56

Source: EPA
Telephone: 202-564-4267
Last EDR Contact: 08/15/2011
Next Scheduled EDR Contact: 11/28/2011
Data Release Frequency: No Update Planned

***Federal Delisted NPL site list***

Delisted NPL: National Priority List Deletions

The National Oil and Hazardous Substances Pollution Contingency Plan (NCP) establishes the criteria that the EPA uses to delete sites from the NPL. In accordance with 40 CFR 300.425.(e), sites may be deleted from the NPL where no further response is appropriate.

| | |
|---|---|
| Date of Government Version: 03/07/2016 | Source: EPA |
| Date Data Arrived at EDR: 04/05/2016 | Telephone: N/A |
| Date Made Active in Reports: 04/15/2016 | Last EDR Contact: 04/05/2016 |
| Number of Days to Update: 10 | Next Scheduled EDR Contact: 04/18/2016 |
| | Data Release Frequency: Quarterly |

***Federal CERCLIS list***

FEDERAL FACILITY: Federal Facility Site Information listing

A listing of National Priority List (NPL) and Base Realignment and Closure (BRAC) sites found in the Comprehensive Environmental Response, Compensation and Liability Information System (CERCLIS) Database where EPA Federal Facilities Restoration and Reuse Office is involved in cleanup activities.

| | |
|---|---|
| Date of Government Version: 11/13/2015 | Source: Environmental Protection Agency |
| Date Data Arrived at EDR: 01/06/2016 | Telephone: 703-603-8704 |
| Date Made Active in Reports: 05/20/2016 | Last EDR Contact: 04/08/2016 |
| Number of Days to Update: 135 | Next Scheduled EDR Contact: 07/18/2016 |
| | Data Release Frequency: Varies |

SEMS: Superfund Enterprise Management System

SEMS (Superfund Enterprise Management System) tracks hazardous waste sites, potentially hazardous waste sites, and remedial activities performed in support of EPA's Superfund Program across the United States. The list was formerly know as CERCLIS, renamed to SEMS by the EPA in 2015. The list contains data on potentially hazardous waste sites that have been reported to the USEPA by states, municipalities, private companies and private persons, pursuant to Section 103 of the Comprehensive Environmental Response, Compensation, and Liability Act (CERCLA). This dataset also contains sites which are either proposed to or on the National Priorities List (NPL) and the sites which are in the screening and assessment phase for possible inclusion on the NPL.

| | |
|---|---|
| Date of Government Version: 03/07/2016 | Source: EPA |
| Date Data Arrived at EDR: 04/05/2016 | Telephone: 800-424-9346 |
| Date Made Active in Reports: 04/15/2016 | Last EDR Contact: 04/05/2016 |
| Number of Days to Update: 10 | Next Scheduled EDR Contact: 08/01/2016 |
| | Data Release Frequency: Quarterly |

***Federal CERCLIS NFRAP site list***

SEMS-ARCHIVE: Superfund Enterprise Management System Archive

SEMS-ARCHIVE (Superfund Enterprise Management System Archive) tracks sites that have no further interest under the Federal Superfund Program based on available information. The list was formerly known as the CERCLIS-NFRAP, renamed to SEMS ARCHIVE by the EPA in 2015. EPA may perform a minimal level of assessment work at a site while it is archived if site conditions change and/or new information becomes available. Archived sites have been removed and archived from the inventory of SEMS sites. Archived status indicates that, to the best of EPA's knowledge, assessment at a site has been completed and that EPA has determined no further steps will be taken to list the site on the National Priorities List (NPL), unless information indicates this decision was not appropriate or other considerations require a recommendation for listing at a later time. The decision does not necessarily mean that there is no hazard associated with a given site; it only means that. based upon available information, the location is not judged to be potential NPL site.

Date of Government Version: 03/07/2016
Date Data Arrived at EDR: 04/05/2016
Date Made Active in Reports: 04/15/2016
Number of Days to Update: 10

Source: EPA
Telephone: 800-424-9346
Last EDR Contact: 04/05/2016
Next Scheduled EDR Contact: 08/01/2016
Data Release Frequency: Quarterly

***Federal RCRA CORRACTS facilities list***

CORRACTS: Corrective Action Report

CORRACTS identifies hazardous waste handlers with RCRA corrective action activity.

Date of Government Version: 12/09/2015
Date Data Arrived at EDR: 03/02/2016
Date Made Active in Reports: 04/05/2016
Number of Days to Update: 34

Source: EPA
Telephone: 800-424-9346
Last EDR Contact: 03/30/2016
Next Scheduled EDR Contact: 07/11/2016
Data Release Frequency: Quarterly

***Federal RCRA non-CORRACTS TSD facilities list***

RCRA-TSDF: RCRA - Treatment, Storage and Disposal

RCRAInfo is EPA's comprehensive information system, providing access to data supporting the Resource Conservation and Recovery Act (RCRA) of 1976 and the Hazardous and Solid Waste Amendments (HSWA) of 1984. The database includes selective information on sites which generate, transport, store, treat and/or dispose of hazardous waste as defined by the Resource Conservation and Recovery Act (RCRA). Transporters are individuals or entities that move hazardous waste from the generator offsite to a facility that can recycle, treat, store, or dispose of the waste. TSDFs treat, store, or dispose of the waste.

Date of Government Version: 12/09/2015
Date Data Arrived at EDR: 03/02/2016
Date Made Active in Reports: 04/05/2016
Number of Days to Update: 34

Source: Environmental Protection Agency
Telephone: (415) 495-8895
Last EDR Contact: 03/30/2016
Next Scheduled EDR Contact: 07/11/2016
Data Release Frequency: Quarterly

***Federal RCRA generators list***

RCRA-LQG: RCRA - Large Quantity Generators

RCRAInfo is EPA's comprehensive information system, providing access to data supporting the Resource Conservation and Recovery Act (RCRA) of 1976 and the Hazardous and Solid Waste Amendments (HSWA) of 1984. The database includes selective information on sites which generate, transport, store, treat and/or dispose of hazardous waste as defined by the Resource Conservation and Recovery Act (RCRA). Large quantity generators (LQGs) generate over 1,000 kilograms (kg) of hazardous waste, or over 1 kg of acutely hazardous waste per month.

Date of Government Version: 12/09/2015
Date Data Arrived at EDR: 03/02/2016
Date Made Active in Reports: 04/05/2016
Number of Days to Update: 34

Source: Environmental Protection Agency
Telephone: (415) 495-8895
Last EDR Contact: 03/30/2016
Next Scheduled EDR Contact: 07/11/2016
Data Release Frequency: Quarterly

RCRA-SQG: RCRA - Small Quantity Generators

RCRAInfo is EPA's comprehensive information system, providing access to data supporting the Resource Conservation and Recovery Act (RCRA) of 1976 and the Hazardous and Solid Waste Amendments (HSWA) of 1984. The database includes selective information on sites which generate, transport, store, treat and/or dispose of hazardous waste as defined by the Resource Conservation and Recovery Act (RCRA). Small quantity generators (SQGs) generate between 100 kg and 1,000 kg of hazardous waste per month.

Date of Government Version: 12/09/2015
Date Data Arrived at EDR: 03/02/2016
Date Made Active in Reports: 04/05/2016
Number of Days to Update: 34

Source: Environmental Protection Agency
Telephone: (415) 495-8895
Last EDR Contact: 03/30/2016
Next Scheduled EDR Contact: 07/11/2016
Data Release Frequency: Quarterly

RCRA-CESQG: RCRA - Conditionally Exempt Small Quantity Generators

RCRAInfo is EPA's comprehensive information system, providing access to data supporting the Resource Conservation and Recovery Act (RCRA) of 1976 and the Hazardous and Solid Waste Amendments (HSWA) of 1984. The database includes selective information on sites which generate, transport, store, treat and/or dispose of hazardous waste as defined by the Resource Conservation and Recovery Act (RCRA). Conditionally exempt small quantity generators (CESQGs) generate less than 100 kg of hazardous waste, or less than 1 kg of acutely hazardous waste per month.

Date of Government Version: 12/09/2015
Date Data Arrived at EDR: 03/02/2016
Date Made Active in Reports: 04/05/2016
Number of Days to Update: 34

Source: Environmental Protection Agency
Telephone: (415) 495-8895
Last EDR Contact: 03/30/2016
Next Scheduled EDR Contact: 07/11/2016
Data Release Frequency: Varies

***Federal institutional controls / engineering controls registries***

LUCIS: Land Use Control Information System

LUCIS contains records of land use control information pertaining to the former Navy Base Realignment and Closure properties.

Date of Government Version: 05/28/2015
Date Data Arrived at EDR: 05/29/2015
Date Made Active in Reports: 06/11/2015
Number of Days to Update: 13

Source: Department of the Navy
Telephone: 843-820-7326
Last EDR Contact: 05/16/2016
Next Scheduled EDR Contact: 08/29/2016
Data Release Frequency: Varies

US ENG CONTROLS: Engineering Controls Sites List

A listing of sites with engineering controls in place. Engineering controls include various forms of caps, building foundations, liners, and treatment methods to create pathway elimination for regulated substances to enter environmental media or effect human health.

Date of Government Version: 09/10/2015
Date Data Arrived at EDR: 09/11/2015
Date Made Active in Reports: 11/03/2015
Number of Days to Update: 53

Source: Environmental Protection Agency
Telephone: 703-603-0695
Last EDR Contact: 05/25/2016
Next Scheduled EDR Contact: 09/12/2016
Data Release Frequency: Varies

US INST CONTROL: Sites with Institutional Controls

A listing of sites with institutional controls in place. Institutional controls include administrative measures, such as groundwater use restrictions, construction restrictions, property use restrictions, and post remediation care requirements intended to prevent exposure to contaminants remaining on site. Deed restrictions are generally required as part of the institutional controls.

Date of Government Version: 09/10/2015
Date Data Arrived at EDR: 09/11/2015
Date Made Active in Reports: 11/03/2015
Number of Days to Update: 53

Source: Environmental Protection Agency
Telephone: 703-603-0695
Last EDR Contact: 05/25/2016
Next Scheduled EDR Contact: 09/12/2016
Data Release Frequency: Varies

***Federal ERNS list***

ERNS: Emergency Response Notification System

Emergency Response Notification System. ERNS records and stores information on reported releases of oil and hazardous substances.

Date of Government Version: 03/28/2016
Date Data Arrived at EDR: 03/30/2016
Date Made Active in Reports: 05/20/2016
Number of Days to Update: 51

Source: National Response Center, United States Coast Guard
Telephone: 202-267-2180
Last EDR Contact: 03/30/2016
Next Scheduled EDR Contact: 07/11/2016
Data Release Frequency: Annually

***State- and tribal - equivalent NPL***

RESPONSE: State Response Sites

Identifies confirmed release sites where DTSC is involved in remediation, either in a lead or oversight capacity. These confirmed release sites are generally high-priority and high potential risk.

Date of Government Version: 05/02/2016
Date Data Arrived at EDR: 05/04/2016
Date Made Active in Reports: 06/21/2016
Number of Days to Update: 48

Source: Department of Toxic Substances Control
Telephone: 916-323-3400
Last EDR Contact: 05/04/2016
Next Scheduled EDR Contact: 08/15/2016
Data Release Frequency: Quarterly

***State- and tribal - equivalent CERCLIS***

ENVIROSTOR: EnviroStor Database

The Department of Toxic Substances Control's (DTSC's) Site Mitigation and Brownfields Reuse Program's (SMBRP's) EnviroStor database identifes sites that have known contamination or sites for which there may be reasons to investigate further. The database includes the following site types: Federal Superfund sites (National Priorities List (NPL)); State Response, including Military Facilities and State Superfund; Voluntary Cleanup; and School sites. EnviroStor provides similar information to the information that was available in CalSites, and provides additional site information, including, but not limited to, identification of formerly-contaminated properties that have been released for reuse, properties where environmental deed restrictions have been recorded to prevent inappropriate land uses, and risk characterization information that is used to assess potential impacts to public health and the environment at contaminated sites.

Date of Government Version: 05/02/2016
Date Data Arrived at EDR: 05/04/2016
Date Made Active in Reports: 06/21/2016
Number of Days to Update: 48

Source: Department of Toxic Substances Control
Telephone: 916-323-3400
Last EDR Contact: 05/04/2016
Next Scheduled EDR Contact: 08/15/2016
Data Release Frequency: Quarterly

***State and tribal landfill and/or solid waste disposal site lists***

SWF/LF (SWIS): Solid Waste Information System

Active, Closed and Inactive Landfills. SWF/LF records typically contain an inve ntory of solid waste disposal facilities or landfills. These may be active or i nactive facilities or open dumps that failed to meet RCRA Section 4004 criteria for solid waste landfills or disposal sites.

Date of Government Version: 05/16/2016
Date Data Arrived at EDR: 05/18/2016
Date Made Active in Reports: 06/21/2016
Number of Days to Update: 34

Source: Department of Resources Recycling and Recovery
Telephone: 916-341-6320
Last EDR Contact: 05/18/2016
Next Scheduled EDR Contact: 08/29/2016
Data Release Frequency: Quarterly

***State and tribal leaking storage tank lists***

LUST REG 7: Leaking Underground Storage Tank Case Listing
Leaking Underground Storage Tank locations. Imperial, Riverside, San Diego, Santa Barbara counties.

Date of Government Version: 02/26/2004
Date Data Arrived at EDR: 02/26/2004
Date Made Active in Reports: 03/24/2004
Number of Days to Update: 27

Source: California Regional Water Quality Control Board Colorado River Basin Region (7)
Telephone: 760-776-8943
Last EDR Contact: 08/01/2011
Next Scheduled EDR Contact: 11/14/2011
Data Release Frequency: No Update Planned

LUST REG 6V: Leaking Underground Storage Tank Case Listing
Leaking Underground Storage Tank locations. Inyo, Kern, Los Angeles, Mono, San Bernardino counties.

Date of Government Version: 06/07/2005
Date Data Arrived at EDR: 06/07/2005
Date Made Active in Reports: 06/29/2005
Number of Days to Update: 22

Source: California Regional Water Quality Control Board Victorville Branch Office (6)
Telephone: 760-241-7365
Last EDR Contact: 09/12/2011
Next Scheduled EDR Contact: 12/26/2011
Data Release Frequency: No Update Planned

LUST REG 6L: Leaking Underground Storage Tank Case Listing
For more current information, please refer to the State Water Resources Control Board's LUST database.

Date of Government Version: 09/09/2003
Date Data Arrived at EDR: 09/10/2003
Date Made Active in Reports: 10/07/2003
Number of Days to Update: 27

Source: California Regional Water Quality Control Board Lahontan Region (6)
Telephone: 530-542-5572
Last EDR Contact: 09/12/2011
Next Scheduled EDR Contact: 12/26/2011
Data Release Frequency: No Update Planned

LUST REG 5: Leaking Underground Storage Tank Database
Leaking Underground Storage Tank locations. Alameda, Alpine, Amador, Butte, Colusa, Contra Costa, Calveras, El Dorado, Fresno, Glenn, Kern, Kings, Lake, Lassen, Madera, Mariposa, Merced, Modoc, Napa, Nevada, Placer, Plumas, Sacramento, San Joaquin, Shasta, Solano, Stanislaus, Sutter, Tehama, Tulare, Tuolumne, Yolo, Yuba counties.

Date of Government Version: 07/01/2008
Date Data Arrived at EDR: 07/22/2008
Date Made Active in Reports: 07/31/2008
Number of Days to Update: 9

Source: California Regional Water Quality Control Board Central Valley Region (5)
Telephone: 916-464-4834
Last EDR Contact: 07/01/2011
Next Scheduled EDR Contact: 10/17/2011
Data Release Frequency: No Update Planned

LUST REG 3: Leaking Underground Storage Tank Database
Leaking Underground Storage Tank locations. Monterey, San Benito, San Luis Obispo, Santa Barbara, Santa Cruz counties.

Date of Government Version: 05/19/2003
Date Data Arrived at EDR: 05/19/2003
Date Made Active in Reports: 06/02/2003
Number of Days to Update: 14

Source: California Regional Water Quality Control Board Central Coast Region (3)
Telephone: 805-542-4786
Last EDR Contact: 07/18/2011
Next Scheduled EDR Contact: 10/31/2011
Data Release Frequency: No Update Planned

LUST REG 2: Fuel Leak List
Leaking Underground Storage Tank locations. Alameda, Contra Costa, Marin, Napa, San Francisco, San Mateo, Santa Clara, Solano, Sonoma counties.

Date of Government Version: 09/30/2004
Date Data Arrived at EDR: 10/20/2004
Date Made Active in Reports: 11/19/2004
Number of Days to Update: 30

Source: California Regional Water Quality Control Board San Francisco Bay Region (2)
Telephone: 510-622-2433
Last EDR Contact: 09/19/2011
Next Scheduled EDR Contact: 01/02/2012
Data Release Frequency: Quarterly

LUST REG 1: Active Toxic Site Investigation
Del Norte, Humboldt, Lake, Mendocino, Modoc, Siskiyou, Sonoma, Trinity counties. For more current information, please refer to the State Water Resources Control Board's LUST database.

Date of Government Version: 02/01/2001
Date Data Arrived at EDR: 02/28/2001
Date Made Active in Reports: 03/29/2001
Number of Days to Update: 29

Source: California Regional Water Quality Control Board North Coast (1)
Telephone: 707-570-3769
Last EDR Contact: 08/01/2011
Next Scheduled EDR Contact: 11/14/2011
Data Release Frequency: No Update Planned

LUST REG 4: Underground Storage Tank Leak List

Los Angeles, Ventura counties. For more current information, please refer to the State Water Resources Control Board's LUST database.

Date of Government Version: 09/07/2004
Date Data Arrived at EDR: 09/07/2004
Date Made Active in Reports: 10/12/2004
Number of Days to Update: 35

Source: California Regional Water Quality Control Board Los Angeles Region (4)
Telephone: 213-576-6710
Last EDR Contact: 09/06/2011
Next Scheduled EDR Contact: 12/19/2011
Data Release Frequency: No Update Planned

LUST: Geotracker's Leaking Underground Fuel Tank Report

Leaking Underground Storage Tank Incident Reports. LUST records contain an inventory of reported leaking underground storage tank incidents. Not all states maintain these records, and the information stored varies by state. For more information on a particular leaking underground storage tank sites, please contact the appropriate regulatory agency.

Date of Government Version: 03/14/2016
Date Data Arrived at EDR: 03/16/2016
Date Made Active in Reports: 05/16/2016
Number of Days to Update: 61

Source: State Water Resources Control Board
Telephone: see region list
Last EDR Contact: 06/14/2016
Next Scheduled EDR Contact: 09/26/2016
Data Release Frequency: Quarterly

LUST REG 9: Leaking Underground Storage Tank Report

Orange, Riverside, San Diego counties. For more current information, please refer to the State Water Resources Control Board's LUST database.

Date of Government Version: 03/01/2001
Date Data Arrived at EDR: 04/23/2001
Date Made Active in Reports: 05/21/2001
Number of Days to Update: 28

Source: California Regional Water Quality Control Board San Diego Region (9)
Telephone: 858-637-5595
Last EDR Contact: 09/26/2011
Next Scheduled EDR Contact: 01/09/2012
Data Release Frequency: No Update Planned

LUST REG 8: Leaking Underground Storage Tanks

California Regional Water Quality Control Board Santa Ana Region (8). For more current information, please refer to the State Water Resources Control Board's LUST database.

Date of Government Version: 02/14/2005
Date Data Arrived at EDR: 02/15/2005
Date Made Active in Reports: 03/28/2005
Number of Days to Update: 41

Source: California Regional Water Quality Control Board Santa Ana Region (8)
Telephone: 909-782-4496
Last EDR Contact: 08/15/2011
Next Scheduled EDR Contact: 11/28/2011
Data Release Frequency: Varies

INDIAN LUST R5: Leaking Underground Storage Tanks on Indian Land

Leaking underground storage tanks located on Indian Land in Michigan, Minnesota and Wisconsin.

Date of Government Version: 02/17/2016
Date Data Arrived at EDR: 04/27/2016
Date Made Active in Reports: 06/03/2016
Number of Days to Update: 37

Source: EPA, Region 5
Telephone: 312-886-7439
Last EDR Contact: 04/27/2016
Next Scheduled EDR Contact: 08/08/2016
Data Release Frequency: Varies

INDIAN LUST R7: Leaking Underground Storage Tanks on Indian Land

LUSTs on Indian land in Iowa, Kansas, and Nebraska

Date of Government Version: 10/09/2015
Date Data Arrived at EDR: 02/12/2016
Date Made Active in Reports: 06/03/2016
Number of Days to Update: 112

Source: EPA Region 7
Telephone: 913-551-7003
Last EDR Contact: 04/29/2016
Next Scheduled EDR Contact: 08/08/2016
Data Release Frequency: Varies

INDIAN LUST R6: Leaking Underground Storage Tanks on Indian Land
LUSTs on Indian land in New Mexico and Oklahoma.

Date of Government Version: 12/11/2015
Date Data Arrived at EDR: 02/19/2016
Date Made Active in Reports: 06/03/2016
Number of Days to Update: 105

Source: EPA Region 6
Telephone: 214-665-6597
Last EDR Contact: 04/29/2016
Next Scheduled EDR Contact: 08/08/2016
Data Release Frequency: Varies

INDIAN LUST R4: Leaking Underground Storage Tanks on Indian Land
LUSTs on Indian land in Florida, Mississippi and North Carolina.

Date of Government Version: 02/05/2016
Date Data Arrived at EDR: 04/29/2016
Date Made Active in Reports: 06/03/2016
Number of Days to Update: 35

Source: EPA Region 4
Telephone: 404-562-8677
Last EDR Contact: 04/26/2016
Next Scheduled EDR Contact: 08/08/2016
Data Release Frequency: Semi-Annually

INDIAN LUST R1: Leaking Underground Storage Tanks on Indian Land
A listing of leaking underground storage tank locations on Indian Land.

Date of Government Version: 10/27/2015
Date Data Arrived at EDR: 10/29/2015
Date Made Active in Reports: 01/04/2016
Number of Days to Update: 67

Source: EPA Region 1
Telephone: 617-918-1313
Last EDR Contact: 04/29/2016
Next Scheduled EDR Contact: 08/08/2016
Data Release Frequency: Varies

INDIAN LUST R8: Leaking Underground Storage Tanks on Indian Land
LUSTs on Indian land in Colorado, Montana, North Dakota, South Dakota, Utah and Wyoming.

Date of Government Version: 10/13/2015
Date Data Arrived at EDR: 10/23/2015
Date Made Active in Reports: 02/18/2016
Number of Days to Update: 118

Source: EPA Region 8
Telephone: 303-312-6271
Last EDR Contact: 04/27/2016
Next Scheduled EDR Contact: 08/08/2016
Data Release Frequency: Quarterly

INDIAN LUST R9: Leaking Underground Storage Tanks on Indian Land
LUSTs on Indian land in Arizona, California, New Mexico and Nevada

Date of Government Version: 02/25/2016
Date Data Arrived at EDR: 04/27/2016
Date Made Active in Reports: 06/03/2016
Number of Days to Update: 37

Source: Environmental Protection Agency
Telephone: 415-972-3372
Last EDR Contact: 04/27/2016
Next Scheduled EDR Contact: 08/08/2016
Data Release Frequency: Quarterly

INDIAN LUST R10: Leaking Underground Storage Tanks on Indian Land
LUSTs on Indian land in Alaska, Idaho, Oregon and Washington.

Date of Government Version: 01/07/2016
Date Data Arrived at EDR: 01/08/2016
Date Made Active in Reports: 02/18/2016
Number of Days to Update: 41

Source: EPA Region 10
Telephone: 206-553-2857
Last EDR Contact: 04/29/2016
Next Scheduled EDR Contact: 08/08/2016
Data Release Frequency: Quarterly

SLIC: Statewide SLIC Cases
The SLIC (Spills, Leaks, Investigations and Cleanup) program is designed to protect and restore water quality from spills, leaks, and similar discharges.

Date of Government Version: 03/14/2016
Date Data Arrived at EDR: 03/16/2016
Date Made Active in Reports: 05/16/2016
Number of Days to Update: 61

Source: State Water Resources Control Board
Telephone: 866-480-1028
Last EDR Contact: 06/14/2016
Next Scheduled EDR Contact: 09/26/2016
Data Release Frequency: Varies

SLIC REG 1: Active Toxic Site Investigations
The SLIC (Spills, Leaks, Investigations and Cleanup) program is designed to protect and restore water quality from spills, leaks, and similar discharges.

Date of Government Version: 04/03/2003
Date Data Arrived at EDR: 04/07/2003
Date Made Active in Reports: 04/25/2003
Number of Days to Update: 18

Source: California Regional Water Quality Control Board, North Coast Region (1)
Telephone: 707-576-2220
Last EDR Contact: 08/01/2011
Next Scheduled EDR Contact: 11/14/2011
Data Release Frequency: No Update Planned

SLIC REG 2: Spills, Leaks, Investigation & Cleanup Cost Recovery Listing
The SLIC (Spills, Leaks, Investigations and Cleanup) program is designed to protect and restore water quality from spills, leaks, and similar discharges.

Date of Government Version: 09/30/2004
Date Data Arrived at EDR: 10/20/2004
Date Made Active in Reports: 11/19/2004
Number of Days to Update: 30

Source: Regional Water Quality Control Board San Francisco Bay Region (2)
Telephone: 510-286-0457
Last EDR Contact: 09/19/2011
Next Scheduled EDR Contact: 01/02/2012
Data Release Frequency: Quarterly

SLIC REG 3: Spills, Leaks, Investigation & Cleanup Cost Recovery Listing
The SLIC (Spills, Leaks, Investigations and Cleanup) program is designed to protect and restore water quality from spills, leaks, and similar discharges.

Date of Government Version: 05/18/2006
Date Data Arrived at EDR: 05/18/2006
Date Made Active in Reports: 06/15/2006
Number of Days to Update: 28

Source: California Regional Water Quality Control Board Central Coast Region (3)
Telephone: 805-549-3147
Last EDR Contact: 07/18/2011
Next Scheduled EDR Contact: 10/31/2011
Data Release Frequency: Semi-Annually

SLIC REG 4: Spills, Leaks, Investigation & Cleanup Cost Recovery Listing
The SLIC (Spills, Leaks, Investigations and Cleanup) program is designed to protect and restore water quality from spills, leaks, and similar discharges.

Date of Government Version: 11/17/2004
Date Data Arrived at EDR: 11/18/2004
Date Made Active in Reports: 01/04/2005
Number of Days to Update: 47

Source: Region Water Quality Control Board Los Angeles Region (4)
Telephone: 213-576-6600
Last EDR Contact: 07/01/2011
Next Scheduled EDR Contact: 10/17/2011
Data Release Frequency: Varies

SLIC REG 5: Spills, Leaks, Investigation & Cleanup Cost Recovery Listing
The SLIC (Spills, Leaks, Investigations and Cleanup) program is designed to protect and restore water quality from spills, leaks, and similar discharges.

Date of Government Version: 04/01/2005
Date Data Arrived at EDR: 04/05/2005
Date Made Active in Reports: 04/21/2005
Number of Days to Update: 16

Source: Regional Water Quality Control Board Central Valley Region (5)
Telephone: 916-464-3291
Last EDR Contact: 09/12/2011
Next Scheduled EDR Contact: 12/26/2011
Data Release Frequency: Semi-Annually

SLIC REG 6V: Spills, Leaks, Investigation & Cleanup Cost Recovery Listing
The SLIC (Spills, Leaks, Investigations and Cleanup) program is designed to protect and restore water quality from spills, leaks, and similar discharges.

Date of Government Version: 05/24/2005
Date Data Arrived at EDR: 05/25/2005
Date Made Active in Reports: 06/16/2005
Number of Days to Update: 22

Source: Regional Water Quality Control Board, Victorville Branch
Telephone: 619-241-6583
Last EDR Contact: 08/15/2011
Next Scheduled EDR Contact: 11/28/2011
Data Release Frequency: Semi-Annually

SLIC REG 6L: SLIC Sites
The SLIC (Spills, Leaks, Investigations and Cleanup) program is designed to protect and restore water quality from spills, leaks, and similar discharges.

Date of Government Version: 09/07/2004
Date Data Arrived at EDR: 09/07/2004
Date Made Active in Reports: 10/12/2004
Number of Days to Update: 35

Source: California Regional Water Quality Control Board, Lahontan Region
Telephone: 530-542-5574
Last EDR Contact: 08/15/2011
Next Scheduled EDR Contact: 11/28/2011
Data Release Frequency: No Update Planned

SLIC REG 7: SLIC List
The SLIC (Spills, Leaks, Investigations and Cleanup) program is designed to protect and restore water quality from spills, leaks, and similar discharges.

Date of Government Version: 11/24/2004
Date Data Arrived at EDR: 11/29/2004
Date Made Active in Reports: 01/04/2005
Number of Days to Update: 36

Source: California Regional Quality Control Board, Colorado River Basin Region
Telephone: 760-346-7491
Last EDR Contact: 08/01/2011
Next Scheduled EDR Contact: 11/14/2011
Data Release Frequency: No Update Planned

SLIC REG 8: Spills, Leaks, Investigation & Cleanup Cost Recovery Listing
The SLIC (Spills, Leaks, Investigations and Cleanup) program is designed to protect and restore water quality from spills, leaks, and similar discharges.

Date of Government Version: 04/03/2008
Date Data Arrived at EDR: 04/03/2008
Date Made Active in Reports: 04/14/2008
Number of Days to Update: 11

Source: California Region Water Quality Control Board Santa Ana Region (8)
Telephone: 951-782-3298
Last EDR Contact: 09/12/2011
Next Scheduled EDR Contact: 12/26/2011
Data Release Frequency: Semi-Annually

SLIC REG 9: Spills, Leaks, Investigation & Cleanup Cost Recovery Listing
The SLIC (Spills, Leaks, Investigations and Cleanup) program is designed to protect and restore water quality from spills, leaks, and similar discharges.

Date of Government Version: 09/10/2007
Date Data Arrived at EDR: 09/11/2007
Date Made Active in Reports: 09/28/2007
Number of Days to Update: 17

Source: California Regional Water Quality Control Board San Diego Region (9)
Telephone: 858-467-2980
Last EDR Contact: 08/08/2011
Next Scheduled EDR Contact: 11/21/2011
Data Release Frequency: Annually

***State and tribal registered storage tank lists***

FEMA UST: Underground Storage Tank Listing
A listing of all FEMA owned underground storage tanks.

Date of Government Version: 01/01/2010
Date Data Arrived at EDR: 02/16/2010
Date Made Active in Reports: 04/12/2010
Number of Days to Update: 55

Source: FEMA
Telephone: 202-646-5797
Last EDR Contact: 04/11/2016
Next Scheduled EDR Contact: 07/25/2016
Data Release Frequency: Varies

UST: Active UST Facilities
Active UST facilities gathered from the local regulatory agencies

Date of Government Version: 03/14/2016
Date Data Arrived at EDR: 03/16/2016
Date Made Active in Reports: 05/04/2016
Number of Days to Update: 49

Source: SWRCB
Telephone: 916-341-5851
Last EDR Contact: 06/14/2016
Next Scheduled EDR Contact: 09/26/2016
Data Release Frequency: Semi-Annually

AST: Aboveground Petroleum Storage Tank Facilities
A listing of aboveground storage tank petroleum storage tank locations.

Date of Government Version: 08/01/2009
Date Data Arrived at EDR: 09/10/2009
Date Made Active in Reports: 10/01/2009
Number of Days to Update: 21

Source: California Environmental Protection Agency
Telephone: 916-327-5092
Last EDR Contact: 06/22/2016
Next Scheduled EDR Contact: 10/10/2016
Data Release Frequency: Quarterly

INDIAN UST R5: Underground Storage Tanks on Indian Land
The Indian Underground Storage Tank (UST) database provides information about underground storage tanks on Indian land in EPA Region 5 (Michigan, Minnesota and Wisconsin and Tribal Nations).

Date of Government Version: 11/05/2015
Date Data Arrived at EDR: 11/13/2015
Date Made Active in Reports: 01/04/2016
Number of Days to Update: 52

Source: EPA Region 5
Telephone: 312-886-6136
Last EDR Contact: 04/27/2016
Next Scheduled EDR Contact: 08/08/2016
Data Release Frequency: Varies

INDIAN UST R6: Underground Storage Tanks on Indian Land
The Indian Underground Storage Tank (UST) database provides information about underground storage tanks on Indian land in EPA Region 6 (Louisiana, Arkansas, Oklahoma, New Mexico, Texas and 65 Tribes).

Date of Government Version: 12/03/2015
Date Data Arrived at EDR: 02/04/2016
Date Made Active in Reports: 06/03/2016
Number of Days to Update: 120

Source: EPA Region 6
Telephone: 214-665-7591
Last EDR Contact: 04/29/2016
Next Scheduled EDR Contact: 08/08/2016
Data Release Frequency: Semi-Annually

INDIAN UST R7: Underground Storage Tanks on Indian Land
The Indian Underground Storage Tank (UST) database provides information about underground storage tanks on Indian land in EPA Region 7 (Iowa, Kansas, Missouri, Nebraska, and 9 Tribal Nations).

Date of Government Version: 09/23/2014
Date Data Arrived at EDR: 11/25/2014
Date Made Active in Reports: 01/29/2015
Number of Days to Update: 65

Source: EPA Region 7
Telephone: 913-551-7003
Last EDR Contact: 04/29/2016
Next Scheduled EDR Contact: 08/08/2016
Data Release Frequency: Varies

INDIAN UST R8: Underground Storage Tanks on Indian Land
The Indian Underground Storage Tank (UST) database provides information about underground storage tanks on Indian land in EPA Region 8 (Colorado, Montana, North Dakota, South Dakota, Utah, Wyoming and 27 Tribal Nations).

Date of Government Version: 01/26/2016
Date Data Arrived at EDR: 02/05/2016
Date Made Active in Reports: 06/03/2016
Number of Days to Update: 119

Source: EPA Region 8
Telephone: 303-312-6137
Last EDR Contact: 04/29/2016
Next Scheduled EDR Contact: 08/08/2016
Data Release Frequency: Quarterly

INDIAN UST R1: Underground Storage Tanks on Indian Land
The Indian Underground Storage Tank (UST) database provides information about underground storage tanks on Indian land in EPA Region 1 (Connecticut, Maine, Massachusetts, New Hampshire, Rhode Island, Vermont and ten Tribal Nations).

Date of Government Version: 10/20/2015
Date Data Arrived at EDR: 10/29/2015
Date Made Active in Reports: 01/04/2016
Number of Days to Update: 67

Source: EPA, Region 1
Telephone: 617-918-1313
Last EDR Contact: 04/29/2016
Next Scheduled EDR Contact: 08/08/2016
Data Release Frequency: Varies

INDIAN UST R4: Underground Storage Tanks on Indian Land

The Indian Underground Storage Tank (UST) database provides information about underground storage tanks on Indian land in EPA Region 4 (Alabama, Florida, Georgia, Kentucky, Mississippi, North Carolina, South Carolina, Tennessee and Tribal Nations)

Date of Government Version: 02/05/2016
Date Data Arrived at EDR: 04/29/2016
Date Made Active in Reports: 06/03/2016
Number of Days to Update: 35

Source: EPA Region 4
Telephone: 404-562-9424
Last EDR Contact: 04/26/2016
Next Scheduled EDR Contact: 08/08/2016
Data Release Frequency: Semi-Annually

INDIAN UST R9: Underground Storage Tanks on Indian Land

The Indian Underground Storage Tank (UST) database provides information about underground storage tanks on Indian land in EPA Region 9 (Arizona, California, Hawaii, Nevada, the Pacific Islands, and Tribal Nations).

Date of Government Version: 02/25/2016
Date Data Arrived at EDR: 04/27/2016
Date Made Active in Reports: 06/03/2016
Number of Days to Update: 37

Source: EPA Region 9
Telephone: 415-972-3368
Last EDR Contact: 04/27/2016
Next Scheduled EDR Contact: 08/08/2016
Data Release Frequency: Quarterly

INDIAN UST R10: Underground Storage Tanks on Indian Land

The Indian Underground Storage Tank (UST) database provides information about underground storage tanks on Indian land in EPA Region 10 (Alaska, Idaho, Oregon, Washington, and Tribal Nations).

Date of Government Version: 01/07/2016
Date Data Arrived at EDR: 01/08/2016
Date Made Active in Reports: 02/18/2016
Number of Days to Update: 41

Source: EPA Region 10
Telephone: 206-553-2857
Last EDR Contact: 04/29/2016
Next Scheduled EDR Contact: 08/08/2016
Data Release Frequency: Quarterly

***State and tribal voluntary cleanup sites***

INDIAN VCP R7: Voluntary Cleanup Priority Lisitng

A listing of voluntary cleanup priority sites located on Indian Land located in Region 7.

Date of Government Version: 03/20/2008
Date Data Arrived at EDR: 04/22/2008
Date Made Active in Reports: 05/19/2008
Number of Days to Update: 27

Source: EPA, Region 7
Telephone: 913-551-7365
Last EDR Contact: 04/20/2009
Next Scheduled EDR Contact: 07/20/2009
Data Release Frequency: Varies

INDIAN VCP R1: Voluntary Cleanup Priority Listing

A listing of voluntary cleanup priority sites located on Indian Land located in Region 1.

Date of Government Version: 07/27/2015
Date Data Arrived at EDR: 09/29/2015
Date Made Active in Reports: 02/18/2016
Number of Days to Update: 142

Source: EPA, Region 1
Telephone: 617-918-1102
Last EDR Contact: 04/01/2016
Next Scheduled EDR Contact: 07/11/2016
Data Release Frequency: Varies

VCP: Voluntary Cleanup Program Properties

Contains low threat level properties with either confirmed or unconfirmed releases and the project proponents have request that DTSC oversee investigation and/or cleanup activities and have agreed to provide coverage for DTSC's costs.

Date of Government Version: 05/02/2016
Date Data Arrived at EDR: 05/04/2016
Date Made Active in Reports: 06/21/2016
Number of Days to Update: 48

Source: Department of Toxic Substances Control
Telephone: 916-323-3400
Last EDR Contact: 05/04/2016
Next Scheduled EDR Contact: 08/15/2016
Data Release Frequency: Quarterly

***State and tribal Brownfields sites***

BROWNFIELDS: Considered Brownfieds Sites Listing
A listing of sites the SWRCB considers to be Brownfields since these are sites have come to them through the MOA Process.

Date of Government Version: 02/29/2016
Date Data Arrived at EDR: 03/07/2016
Date Made Active in Reports: 05/04/2016
Number of Days to Update: 58

Source: State Water Resources Control Board
Telephone: 916-323-7905
Last EDR Contact: 06/15/2016
Next Scheduled EDR Contact: 09/19/2016
Data Release Frequency: Varies

**ADDITIONAL ENVIRONMENTAL RECORDS**

***Local Brownfield lists***

US BROWNFIELDS: A Listing of Brownfields Sites
Brownfields are real property, the expansion, redevelopment, or reuse of which may be complicated by the presence or potential presence of a hazardous substance, pollutant, or contaminant. Cleaning up and reinvesting in these properties takes development pressures off of undeveloped, open land, and both improves and protects the environment. Assessment, Cleanup and Redevelopment Exchange System (ACRES) stores information reported by EPA Brownfields grant recipients on brownfields properties assessed or cleaned up with grant funding as well as information on Targeted Brownfields Assessments performed by EPA Regions. A listing of ACRES Brownfield sites is obtained from Cleanups in My Community. Cleanups in My Community provides information on Brownfields properties for which information is reported back to EPA, as well as areas served by Brownfields grant programs.

Date of Government Version: 12/22/2015
Date Data Arrived at EDR: 12/23/2015
Date Made Active in Reports: 02/18/2016
Number of Days to Update: 57

Source: Environmental Protection Agency
Telephone: 202-566-2777
Last EDR Contact: 06/22/2016
Next Scheduled EDR Contact: 10/03/2016
Data Release Frequency: Semi-Annually

***Local Lists of Landfill / Solid Waste Disposal Sites***

WMUDS/SWAT: Waste Management Unit Database
Waste Management Unit Database System. WMUDS is used by the State Water Resources Control Board staff and the Regional Water Quality Control Boards for program tracking and inventory of waste management units. WMUDS is composed of the following databases: Facility Information, Scheduled Inspections Information, Waste Management Unit Information, SWAT Program Information, SWAT Report Summary Information, SWAT Report Summary Data, Chapter 15 (formerly Subchapter 15) Information, Chapter 15 Monitoring Parameters, TPCA Program Information, RCRA Program Information, Closure Information, and Interested Parties Information.

Date of Government Version: 04/01/2000
Date Data Arrived at EDR: 04/10/2000
Date Made Active in Reports: 05/10/2000
Number of Days to Update: 30

Source: State Water Resources Control Board
Telephone: 916-227-4448
Last EDR Contact: 05/06/2016
Next Scheduled EDR Contact: 08/22/2016
Data Release Frequency: No Update Planned

SWRCY: Recycler Database
A listing of recycling facilities in California.

Date of Government Version: 03/15/2016
Date Data Arrived at EDR: 03/16/2016
Date Made Active in Reports: 05/09/2016
Number of Days to Update: 54

Source: Department of Conservation
Telephone: 916-323-3836
Last EDR Contact: 06/14/2016
Next Scheduled EDR Contact: 09/26/2016
Data Release Frequency: Quarterly

HAULERS: Registered Waste Tire Haulers Listing
A listing of registered waste tire haulers.

Date of Government Version: 04/07/2016
Date Data Arrived at EDR: 04/12/2016
Date Made Active in Reports: 06/01/2016
Number of Days to Update: 50

Source: Integrated Waste Management Board
Telephone: 916-341-6422
Last EDR Contact: 05/13/2016
Next Scheduled EDR Contact: 08/22/2016
Data Release Frequency: Varies

INDIAN ODI: Report on the Status of Open Dumps on Indian Lands
Location of open dumps on Indian land.

Date of Government Version: 12/31/1998
Date Data Arrived at EDR: 12/03/2007
Date Made Active in Reports: 01/24/2008
Number of Days to Update: 52

Source: Environmental Protection Agency
Telephone: 703-308-8245
Last EDR Contact: 04/27/2016
Next Scheduled EDR Contact: 08/15/2016
Data Release Frequency: Varies

DEBRIS REGION 9: Torres Martinez Reservation Illegal Dump Site Locations
A listing of illegal dump sites location on the Torres Martinez Indian Reservation located in eastern Riverside County and northern Imperial County, California.

Date of Government Version: 01/12/2009
Date Data Arrived at EDR: 05/07/2009
Date Made Active in Reports: 09/21/2009
Number of Days to Update: 137

Source: EPA, Region 9
Telephone: 415-947-4219
Last EDR Contact: 04/21/2016
Next Scheduled EDR Contact: 08/08/2016
Data Release Frequency: No Update Planned

ODI: Open Dump Inventory
An open dump is defined as a disposal facility that does not comply with one or more of the Part 257 or Part 258 Subtitle D Criteria.

Date of Government Version: 06/30/1985
Date Data Arrived at EDR: 08/09/2004
Date Made Active in Reports: 09/17/2004
Number of Days to Update: 39

Source: Environmental Protection Agency
Telephone: 800-424-9346
Last EDR Contact: 06/09/2004
Next Scheduled EDR Contact: N/A
Data Release Frequency: No Update Planned

***Local Lists of Hazardous waste / Contaminated Sites***

US HIST CDL: National Clandestine Laboratory Register
A listing of clandestine drug lab locations that have been removed from the DEAs National Clandestine Laboratory Register.

Date of Government Version: 02/18/2016
Date Data Arrived at EDR: 03/07/2016
Date Made Active in Reports: 06/03/2016
Number of Days to Update: 88

Source: Drug Enforcement Administration
Telephone: 202-307-1000
Last EDR Contact: 03/01/2016
Next Scheduled EDR Contact: 06/13/2016
Data Release Frequency: No Update Planned

HIST CAL-SITES: Calsites Database
The Calsites database contains potential or confirmed hazardous substance release properties. In 1996, California EPA reevaluated and significantly reduced the number of sites in the Calsites database. No longer updated by the state agency. It has been replaced by ENVIROSTOR.

Date of Government Version: 08/08/2005
Date Data Arrived at EDR: 08/03/2006
Date Made Active in Reports: 08/24/2006
Number of Days to Update: 21

Source: Department of Toxic Substance Control
Telephone: 916-323-3400
Last EDR Contact: 02/23/2009
Next Scheduled EDR Contact: 05/25/2009
Data Release Frequency: No Update Planned

SCH: School Property Evaluation Program

This category contains proposed and existing school sites that are being evaluated by DTSC for possible hazardous materials contamination. In some cases, these properties may be listed in the CalSites category depending on the level of threat to public health and safety or the environment they pose.

Date of Government Version: 05/02/2016
Date Data Arrived at EDR: 05/04/2016
Date Made Active in Reports: 06/21/2016
Number of Days to Update: 48

Source: Department of Toxic Substances Control
Telephone: 916-323-3400
Last EDR Contact: 05/04/2016
Next Scheduled EDR Contact: 08/15/2016
Data Release Frequency: Quarterly

CDL: Clandestine Drug Labs

A listing of drug lab locations. Listing of a location in this database does not indicate that any illegal drug lab materials were or were not present there, and does not constitute a determination that the location either requires or does not require additional cleanup work.

Date of Government Version: 12/31/2015
Date Data Arrived at EDR: 05/10/2016
Date Made Active in Reports: 06/17/2016
Number of Days to Update: 38

Source: Department of Toxic Substances Control
Telephone: 916-255-6504
Last EDR Contact: 04/21/2016
Next Scheduled EDR Contact: 07/25/2016
Data Release Frequency: Varies

TOXIC PITS: Toxic Pits Cleanup Act Sites

Toxic PITS Cleanup Act Sites. TOXIC PITS identifies sites suspected of containing hazardous substances where cleanup has not yet been completed.

Date of Government Version: 07/01/1995
Date Data Arrived at EDR: 08/30/1995
Date Made Active in Reports: 09/26/1995
Number of Days to Update: 27

Source: State Water Resources Control Board
Telephone: 916-227-4364
Last EDR Contact: 01/26/2009
Next Scheduled EDR Contact: 04/27/2009
Data Release Frequency: No Update Planned

US CDL: Clandestine Drug Labs

A listing of clandestine drug lab locations. The U.S. Department of Justice ("the Department") provides this web site as a public service. It contains addresses of some locations where law enforcement agencies reported they found chemicals or other items that indicated the presence of either clandestine drug laboratories or dumpsites. In most cases, the source of the entries is not the Department, and the Department has not verified the entry and does not guarantee its accuracy. Members of the public must verify the accuracy of all entries by, for example, contacting local law enforcement and local health departments.

Date of Government Version: 02/18/2016
Date Data Arrived at EDR: 03/07/2016
Date Made Active in Reports: 06/03/2016
Number of Days to Update: 88

Source: Drug Enforcement Administration
Telephone: 202-307-1000
Last EDR Contact: 05/31/2016
Next Scheduled EDR Contact: 09/12/2016
Data Release Frequency: Quarterly

***Local Lists of Registered Storage Tanks***

SWEEPS UST: SWEEPS UST Listing

Statewide Environmental Evaluation and Planning System. This underground storage tank listing was updated and maintained by a company contacted by the SWRCB in the early 1990's. The listing is no longer updated or maintained. The local agency is the contact for more information on a site on the SWEEPS list.

Date of Government Version: 06/01/1994
Date Data Arrived at EDR: 07/07/2005
Date Made Active in Reports: 08/11/2005
Number of Days to Update: 35

Source: State Water Resources Control Board
Telephone: N/A
Last EDR Contact: 06/03/2005
Next Scheduled EDR Contact: N/A
Data Release Frequency: No Update Planned

UST MENDOCINO: Mendocino County UST Database
A listing of underground storage tank locations in Mendocino County.

Date of Government Version: 11/25/2015
Date Data Arrived at EDR: 12/01/2015
Date Made Active in Reports: 12/17/2015
Number of Days to Update: 16

Source: Department of Public Health
Telephone: 707-463-4466
Last EDR Contact: 06/01/2016
Next Scheduled EDR Contact: 09/12/2016
Data Release Frequency: Annually

HIST UST: Hazardous Substance Storage Container Database
The Hazardous Substance Storage Container Database is a historical listing of UST sites. Refer to local/county source for current data.

Date of Government Version: 10/15/1990
Date Data Arrived at EDR: 01/25/1991
Date Made Active in Reports: 02/12/1991
Number of Days to Update: 18

Source: State Water Resources Control Board
Telephone: 916-341-5851
Last EDR Contact: 07/26/2001
Next Scheduled EDR Contact: N/A
Data Release Frequency: No Update Planned

CA FID UST: Facility Inventory Database
The Facility Inventory Database (FID) contains a historical listing of active and inactive underground storage tank locations from the State Water Resource Control Board. Refer to local/county source for current data.

Date of Government Version: 10/31/1994
Date Data Arrived at EDR: 09/05/1995
Date Made Active in Reports: 09/29/1995
Number of Days to Update: 24

Source: California Environmental Protection Agency
Telephone: 916-341-5851
Last EDR Contact: 12/28/1998
Next Scheduled EDR Contact: N/A
Data Release Frequency: No Update Planned

***Local Land Records***

LIENS: Environmental Liens Listing
A listing of property locations with environmental liens for California where DTSC is a lien holder.

Date of Government Version: 03/08/2016
Date Data Arrived at EDR: 03/11/2016
Date Made Active in Reports: 05/04/2016
Number of Days to Update: 54

Source: Department of Toxic Substances Control
Telephone: 916-323-3400
Last EDR Contact: 06/02/2016
Next Scheduled EDR Contact: 09/19/2016
Data Release Frequency: Varies

LIENS 2: CERCLA Lien Information
A Federal CERCLA ('Superfund') lien can exist by operation of law at any site or property at which EPA has spent Superfund monies. These monies are spent to investigate and address releases and threatened releases of contamination. CERCLIS provides information as to the identity of these sites and properties.

Date of Government Version: 02/18/2014
Date Data Arrived at EDR: 03/18/2014
Date Made Active in Reports: 04/24/2014
Number of Days to Update: 37

Source: Environmental Protection Agency
Telephone: 202-564-6023
Last EDR Contact: 04/26/2016
Next Scheduled EDR Contact: 08/08/2016
Data Release Frequency: Varies

DEED: Deed Restriction Listing

Site Mitigation and Brownfields Reuse Program Facility Sites with Deed Restrictions & Hazardous Waste Management Program Facility Sites with Deed / Land Use Restriction. The DTSC Site Mitigation and Brownfields Reuse Program (SMBRP) list includes sites cleaned up under the program's oversight and generally does not include current or former hazardous waste facilities that required a hazardous waste facility permit. The list represents deed restrictions that are active. Some sites have multiple deed restrictions. The DTSC Hazardous Waste Management Program (HWMP) has developed a list of current or former hazardous waste facilities that have a recorded land use restriction at the local county recorder's office. The land use restrictions on this list were required by the DTSC HWMP as a result of the presence of hazardous substances that remain on site after the facility (or part of the facility) has been closed or cleaned up. The types of land use restriction include deed notice, deed restriction, or a land use restriction that binds current and future owners.

Date of Government Version: 03/07/2016
Date Data Arrived at EDR: 03/08/2016
Date Made Active in Reports: 05/04/2016
Number of Days to Update: 57

Source: DTSC and SWRCB
Telephone: 916-323-3400
Last EDR Contact: 06/07/2016
Next Scheduled EDR Contact: 09/19/2016
Data Release Frequency: Semi-Annually

***Records of Emergency Release Reports***

HMIRS: Hazardous Materials Information Reporting System

Hazardous Materials Incident Report System. HMIRS contains hazardous material spill incidents reported to DOT.

Date of Government Version: 06/24/2015
Date Data Arrived at EDR: 06/26/2015
Date Made Active in Reports: 09/02/2015
Number of Days to Update: 68

Source: U.S. Department of Transportation
Telephone: 202-366-4555
Last EDR Contact: 03/30/2016
Next Scheduled EDR Contact: 07/11/2016
Data Release Frequency: Annually

CHMIRS: California Hazardous Material Incident Report System

California Hazardous Material Incident Reporting System. CHMIRS contains information on reported hazardous material incidents (accidental releases or spills).

Date of Government Version: 04/11/2016
Date Data Arrived at EDR: 04/27/2016
Date Made Active in Reports: 06/17/2016
Number of Days to Update: 51

Source: Office of Emergency Services
Telephone: 916-845-8400
Last EDR Contact: 04/27/2016
Next Scheduled EDR Contact: 08/08/2016
Data Release Frequency: Varies

LDS: Land Disposal Sites Listing

The Land Disposal program regulates of waste discharge to land for treatment, storage and disposal in waste management units.

Date of Government Version: 03/14/2016
Date Data Arrived at EDR: 03/16/2016
Date Made Active in Reports: 05/16/2016
Number of Days to Update: 61

Source: State Water Qualilty Control Board
Telephone: 866-480-1028
Last EDR Contact: 06/14/2016
Next Scheduled EDR Contact: 09/26/2016
Data Release Frequency: Quarterly

MCS: Military Cleanup Sites Listing

The State Water Resources Control Board and nine Regional Water Quality Control Boards partner with the Department of Defense (DoD) through the Defense and State Memorandum of Agreement (DSMOA) to oversee the investigation and remediation of water quality issues at military facilities.

Date of Government Version: 03/14/2016
Date Data Arrived at EDR: 03/16/2016
Date Made Active in Reports: 05/16/2016
Number of Days to Update: 61

Source: State Water Resources Control Board
Telephone: 866-480-1028
Last EDR Contact: 06/14/2016
Next Scheduled EDR Contact: 09/26/2016
Data Release Frequency: Quarterly

SPILLS 90: SPILLS90 data from FirstSearch

Spills 90 includes those spill and release records available exclusively from FirstSearch databases. Typically, they may include chemical, oil and/or hazardous substance spills recorded after 1990. Duplicate records that are already included in EDR incident and release records are not included in Spills 90.

Date of Government Version: 06/06/2012
Date Data Arrived at EDR: 01/03/2013
Date Made Active in Reports: 02/22/2013
Number of Days to Update: 50

Source: FirstSearch
Telephone: N/A
Last EDR Contact: 01/03/2013
Next Scheduled EDR Contact: N/A
Data Release Frequency: No Update Planned

***Other Ascertainable Records***

RCRA NonGen / NLR: RCRA - Non Generators / No Longer Regulated

RCRAInfo is EPA's comprehensive information system, providing access to data supporting the Resource Conservation and Recovery Act (RCRA) of 1976 and the Hazardous and Solid Waste Amendments (HSWA) of 1984. The database includes selective information on sites which generate, transport, store, treat and/or dispose of hazardous waste as defined by the Resource Conservation and Recovery Act (RCRA). Non-Generators do not presently generate hazardous waste.

Date of Government Version: 12/09/2015
Date Data Arrived at EDR: 03/02/2016
Date Made Active in Reports: 04/05/2016
Number of Days to Update: 34

Source: Environmental Protection Agency
Telephone: (415) 495-8895
Last EDR Contact: 03/30/2016
Next Scheduled EDR Contact: 07/11/2016
Data Release Frequency: Varies

FUDS: Formerly Used Defense Sites

The listing includes locations of Formerly Used Defense Sites properties where the US Army Corps of Engineers is actively working or will take necessary cleanup actions.

Date of Government Version: 01/31/2015
Date Data Arrived at EDR: 07/08/2015
Date Made Active in Reports: 10/13/2015
Number of Days to Update: 97

Source: U.S. Army Corps of Engineers
Telephone: 202-528-4285
Last EDR Contact: 06/10/2016
Next Scheduled EDR Contact: 09/19/2016
Data Release Frequency: Varies

DOD: Department of Defense Sites

This data set consists of federally owned or administered lands, administered by the Department of Defense, that have any area equal to or greater than 640 acres of the United States, Puerto Rico, and the U.S. Virgin Islands.

Date of Government Version: 12/31/2005
Date Data Arrived at EDR: 11/10/2006
Date Made Active in Reports: 01/11/2007
Number of Days to Update: 62

Source: USGS
Telephone: 888-275-8747
Last EDR Contact: 04/15/2016
Next Scheduled EDR Contact: 07/25/2016
Data Release Frequency: Semi-Annually

FEDLAND: Federal and Indian Lands

Federally and Indian administrated lands of the United States. Lands included are administrated by: Army Corps of Engineers, Bureau of Reclamation, National Wild and Scenic River, National Wildlife Refuge, Public Domain Land, Wilderness, Wilderness Study Area, Wildlife Management Area, Bureau of Indian Affairs, Bureau of Land Management, Department of Justice, Forest Service, Fish and Wildlife Service, National Park Service.

Date of Government Version: 12/31/2005
Date Data Arrived at EDR: 02/06/2006
Date Made Active in Reports: 01/11/2007
Number of Days to Update: 339

Source: U.S. Geological Survey
Telephone: 888-275-8747
Last EDR Contact: 04/15/2016
Next Scheduled EDR Contact: 07/25/2016
Data Release Frequency: N/A

SCRD DRYCLEANERS: State Coalition for Remediation of Drycleaners Listing

The State Coalition for Remediation of Drycleaners was established in 1998, with support from the U.S. EPA Office of Superfund Remediation and Technology Innovation. It is comprised of representatives of states with established drycleaner remediation programs. Currently the member states are Alabama, Connecticut, Florida, Illinois, Kansas, Minnesota, Missouri, North Carolina, Oregon, South Carolina, Tennessee, Texas, and Wisconsin.

Date of Government Version: 03/07/2011
Date Data Arrived at EDR: 03/09/2011
Date Made Active in Reports: 05/02/2011
Number of Days to Update: 54

Source: Environmental Protection Agency
Telephone: 615-532-8599
Last EDR Contact: 05/20/2016
Next Scheduled EDR Contact: 08/29/2016
Data Release Frequency: Varies

US FIN ASSUR: Financial Assurance Information

All owners and operators of facilities that treat, store, or dispose of hazardous waste are required to provide proof that they will have sufficient funds to pay for the clean up, closure, and post-closure care of their facilities.

Date of Government Version: 09/01/2015
Date Data Arrived at EDR: 09/03/2015
Date Made Active in Reports: 11/03/2015
Number of Days to Update: 61

Source: Environmental Protection Agency
Telephone: 202-566-1917
Last EDR Contact: 05/18/2016
Next Scheduled EDR Contact: 08/29/2016
Data Release Frequency: Quarterly

EPA WATCH LIST: EPA WATCH LIST

EPA maintains a "Watch List" to facilitate dialogue between EPA, state and local environmental agencies on enforcement matters relating to facilities with alleged violations identified as either significant or high priority. Being on the Watch List does not mean that the facility has actually violated the law only that an investigation by EPA or a state or local environmental agency has led those organizations to allege that an unproven violation has in fact occurred. Being on the Watch List does not represent a higher level of concern regarding the alleged violations that were detected, but instead indicates cases requiring additional dialogue between EPA, state and local agencies - primarily because of the length of time the alleged violation has gone unaddressed or unresolved.

Date of Government Version: 08/30/2013
Date Data Arrived at EDR: 03/21/2014
Date Made Active in Reports: 06/17/2014
Number of Days to Update: 88

Source: Environmental Protection Agency
Telephone: 617-520-3000
Last EDR Contact: 05/09/2016
Next Scheduled EDR Contact: 08/22/2016
Data Release Frequency: Quarterly

2020 COR ACTION: 2020 Corrective Action Program List

The EPA has set ambitious goals for the RCRA Corrective Action program by creating the 2020 Corrective Action Universe. This RCRA cleanup baseline includes facilities expected to need corrective action. The 2020 universe contains a wide variety of sites. Some properties are heavily contaminated while others were contaminated but have since been cleaned up. Still others have not been fully investigated yet, and may require little or no remediation. Inclusion in the 2020 Universe does not necessarily imply failure on the part of a facility to meet its RCRA obligations.

Date of Government Version: 04/22/2013
Date Data Arrived at EDR: 03/03/2015
Date Made Active in Reports: 03/09/2015
Number of Days to Update: 6

Source: Environmental Protection Agency
Telephone: 703-308-4044
Last EDR Contact: 05/12/2016
Next Scheduled EDR Contact: 08/22/2016
Data Release Frequency: Varies

TSCA: Toxic Substances Control Act

Toxic Substances Control Act. TSCA identifies manufacturers and importers of chemical substances included on the TSCA Chemical Substance Inventory list. It includes data on the production volume of these substances by plant site.

Date of Government Version: 12/31/2012
Date Data Arrived at EDR: 01/15/2015
Date Made Active in Reports: 01/29/2015
Number of Days to Update: 14

Source: EPA
Telephone: 202-260-5521
Last EDR Contact: 03/24/2016
Next Scheduled EDR Contact: 07/04/2016
Data Release Frequency: Every 4 Years

TRIS: Toxic Chemical Release Inventory System

Toxic Release Inventory System. TRIS identifies facilities which release toxic chemicals to the air, water and land in reportable quantities under SARA Title III Section 313.

Date of Government Version: 12/31/2014
Date Data Arrived at EDR: 11/24/2015
Date Made Active in Reports: 04/05/2016
Number of Days to Update: 133

Source: EPA
Telephone: 202-566-0250
Last EDR Contact: 05/24/2016
Next Scheduled EDR Contact: 09/05/2016
Data Release Frequency: Annually

SSTS: Section 7 Tracking Systems

Section 7 of the Federal Insecticide, Fungicide and Rodenticide Act, as amended (92 Stat. 829) requires all registered pesticide-producing establishments to submit a report to the Environmental Protection Agency by March 1st each year. Each establishment must report the types and amounts of pesticides, active ingredients and devices being produced, and those having been produced and sold or distributed in the past year.

Date of Government Version: 12/31/2009
Date Data Arrived at EDR: 12/10/2010
Date Made Active in Reports: 02/25/2011
Number of Days to Update: 77

Source: EPA
Telephone: 202-564-4203
Last EDR Contact: 04/25/2016
Next Scheduled EDR Contact: 08/08/2016
Data Release Frequency: Annually

ROD: Records Of Decision

Record of Decision. ROD documents mandate a permanent remedy at an NPL (Superfund) site containing technical and health information to aid in the cleanup.

Date of Government Version: 11/25/2013
Date Data Arrived at EDR: 12/12/2013
Date Made Active in Reports: 02/24/2014
Number of Days to Update: 74

Source: EPA
Telephone: 703-416-0223
Last EDR Contact: 06/07/2016
Next Scheduled EDR Contact: 09/19/2016
Data Release Frequency: Annually

RMP: Risk Management Plans

When Congress passed the Clean Air Act Amendments of 1990, it required EPA to publish regulations and guidance for chemical accident prevention at facilities using extremely hazardous substances. The Risk Management Program Rule (RMP Rule) was written to implement Section 112(r) of these amendments. The rule, which built upon existing industry codes and standards, requires companies of all sizes that use certain flammable and toxic substances to develop a Risk Management Program, which includes a(n): Hazard assessment that details the potential effects of an accidental release, an accident history of the last five years, and an evaluation of worst-case and alternative accidental releases; Prevention program that includes safety precautions and maintenance, monitoring, and employee training measures; and Emergency response program that spells out emergency health care, employee training measures and procedures for informing the public and response agencies (e.g the fire department) should an accident occur.

Date of Government Version: 08/01/2015
Date Data Arrived at EDR: 08/26/2015
Date Made Active in Reports: 11/03/2015
Number of Days to Update: 69

Source: Environmental Protection Agency
Telephone: 202-564-8600
Last EDR Contact: 04/25/2016
Next Scheduled EDR Contact: 08/08/2016
Data Release Frequency: Varies

RAATS: RCRA Administrative Action Tracking System

RCRA Administration Action Tracking System. RAATS contains records based on enforcement actions issued under RCRA pertaining to major violators and includes administrative and civil actions brought by the EPA. For administration actions after September 30, 1995, data entry in the RAATS database was discontinued. EPA will retain a copy of the database for historical records. It was necessary to terminate RAATS because a decrease in agency resources made it impossible to continue to update the information contained in the database.

Date of Government Version: 04/17/1995
Date Data Arrived at EDR: 07/03/1995
Date Made Active in Reports: 08/07/1995
Number of Days to Update: 35

Source: EPA
Telephone: 202-564-4104
Last EDR Contact: 06/02/2008
Next Scheduled EDR Contact: 09/01/2008
Data Release Frequency: No Update Planned

PRP: Potentially Responsible Parties
A listing of verified Potentially Responsible Parties

Date of Government Version: 10/25/2013
Date Data Arrived at EDR: 10/17/2014
Date Made Active in Reports: 10/20/2014
Number of Days to Update: 3

Source: EPA
Telephone: 202-564-6023
Last EDR Contact: 05/12/2016
Next Scheduled EDR Contact: 08/22/2016
Data Release Frequency: Quarterly

PADS: PCB Activity Database System
PCB Activity Database. PADS Identifies generators, transporters, commercial storers and/or brokers and disposers of PCB's who are required to notify the EPA of such activities.

Date of Government Version: 07/01/2014
Date Data Arrived at EDR: 10/15/2014
Date Made Active in Reports: 11/17/2014
Number of Days to Update: 33

Source: EPA
Telephone: 202-566-0500
Last EDR Contact: 04/12/2016
Next Scheduled EDR Contact: 07/25/2016
Data Release Frequency: Annually

ICIS: Integrated Compliance Information System
The Integrated Compliance Information System (ICIS) supports the information needs of the national enforcement and compliance program as well as the unique needs of the National Pollutant Discharge Elimination System (NPDES) program.

Date of Government Version: 01/23/2015
Date Data Arrived at EDR: 02/06/2015
Date Made Active in Reports: 03/09/2015
Number of Days to Update: 31

Source: Environmental Protection Agency
Telephone: 202-564-5088
Last EDR Contact: 04/08/2016
Next Scheduled EDR Contact: 07/25/2016
Data Release Frequency: Quarterly

FTTS: FIFRA/ TSCA Tracking System - FIFRA (Federal Insecticide, Fungicide, & Rodenticide Act)/TSCA (Toxic Substances Control Act)
FTTS tracks administrative cases and pesticide enforcement actions and compliance activities related to FIFRA, TSCA and EPCRA (Emergency Planning and Community Right-to-Know Act). To maintain currency, EDR contacts the Agency on a quarterly basis.

Date of Government Version: 04/09/2009
Date Data Arrived at EDR: 04/16/2009
Date Made Active in Reports: 05/11/2009
Number of Days to Update: 25

Source: EPA/Office of Prevention, Pesticides and Toxic Substances
Telephone: 202-566-1667
Last EDR Contact: 05/20/2016
Next Scheduled EDR Contact: 09/05/2016
Data Release Frequency: Quarterly

FTTS INSP: FIFRA/ TSCA Tracking System - FIFRA (Federal Insecticide, Fungicide, & Rodenticide Act)/TSCA (Toxic Substances Control Act)
A listing of FIFRA/TSCA Tracking System (FTTS) inspections and enforcements.

Date of Government Version: 04/09/2009
Date Data Arrived at EDR: 04/16/2009
Date Made Active in Reports: 05/11/2009
Number of Days to Update: 25

Source: EPA
Telephone: 202-566-1667
Last EDR Contact: 05/20/2016
Next Scheduled EDR Contact: 09/05/2016
Data Release Frequency: Quarterly

MLTS: Material Licensing Tracking System
MLTS is maintained by the Nuclear Regulatory Commission and contains a list of approximately 8,100 sites which possess or use radioactive materials and which are subject to NRC licensing requirements. To maintain currency, EDR contacts the Agency on a quarterly basis.

Date of Government Version: 03/07/2016
Date Data Arrived at EDR: 03/18/2016
Date Made Active in Reports: 04/15/2016
Number of Days to Update: 28

Source: Nuclear Regulatory Commission
Telephone: 301-415-7169
Last EDR Contact: 05/06/2016
Next Scheduled EDR Contact: 08/22/2016
Data Release Frequency: Quarterly

COAL ASH DOE: Steam-Electric Plant Operation Data
A listing of power plants that store ash in surface ponds.

Date of Government Version: 12/31/2005
Date Data Arrived at EDR: 08/07/2009
Date Made Active in Reports: 10/22/2009
Number of Days to Update: 76

Source: Department of Energy
Telephone: 202-586-8719
Last EDR Contact: 06/09/2016
Next Scheduled EDR Contact: 09/19/2016
Data Release Frequency: Varies

COAL ASH EPA: Coal Combustion Residues Surface Impoundments List
A listing of coal combustion residues surface impoundments with high hazard potential ratings.

Date of Government Version: 07/01/2014
Date Data Arrived at EDR: 09/10/2014
Date Made Active in Reports: 10/20/2014
Number of Days to Update: 40

Source: Environmental Protection Agency
Telephone: N/A
Last EDR Contact: 06/10/2016
Next Scheduled EDR Contact: 09/19/2016
Data Release Frequency: Varies

PCB TRANSFORMER: PCB Transformer Registration Database
The database of PCB transformer registrations that includes all PCB registration submittals.

Date of Government Version: 02/01/2011
Date Data Arrived at EDR: 10/19/2011
Date Made Active in Reports: 01/10/2012
Number of Days to Update: 83

Source: Environmental Protection Agency
Telephone: 202-566-0517
Last EDR Contact: 04/26/2016
Next Scheduled EDR Contact: 08/08/2016
Data Release Frequency: Varies

RADINFO: Radiation Information Database
The Radiation Information Database (RADINFO) contains information about facilities that are regulated by U.S. Environmental Protection Agency (EPA) regulations for radiation and radioactivity.

Date of Government Version: 07/07/2015
Date Data Arrived at EDR: 07/09/2015
Date Made Active in Reports: 09/16/2015
Number of Days to Update: 69

Source: Environmental Protection Agency
Telephone: 202-343-9775
Last EDR Contact: 04/08/2016
Next Scheduled EDR Contact: 07/18/2016
Data Release Frequency: Quarterly

HIST FTTS: FIFRA/TSCA Tracking System Administrative Case Listing
A complete administrative case listing from the FIFRA/TSCA Tracking System (FTTS) for all ten EPA regions. The information was obtained from the National Compliance Database (NCDB). NCDB supports the implementation of FIFRA (Federal Insecticide, Fungicide, and Rodenticide Act) and TSCA (Toxic Substances Control Act). Some EPA regions are now closing out records. Because of that, and the fact that some EPA regions are not providing EPA Headquarters with updated records, it was decided to create a HIST FTTS database. It included records that may not be included in the newer FTTS database updates. This database is no longer updated.

Date of Government Version: 10/19/2006
Date Data Arrived at EDR: 03/01/2007
Date Made Active in Reports: 04/10/2007
Number of Days to Update: 40

Source: Environmental Protection Agency
Telephone: 202-564-2501
Last EDR Contact: 12/17/2007
Next Scheduled EDR Contact: 03/17/2008
Data Release Frequency: No Update Planned

HIST FTTS INSP: FIFRA/TSCA Tracking System Inspection & Enforcement Case Listing
A complete inspection and enforcement case listing from the FIFRA/TSCA Tracking System (FTTS) for all ten EPA regions. The information was obtained from the National Compliance Database (NCDB). NCDB supports the implementation of FIFRA (Federal Insecticide, Fungicide, and Rodenticide Act) and TSCA (Toxic Substances Control Act). Some EPA regions are now closing out records. Because of that, and the fact that some EPA regions are not providing EPA Headquarters with updated records, it was decided to create a HIST FTTS database. It included records that may not be included in the newer FTTS database updates. This database is no longer updated.

Date of Government Version: 10/19/2006
Date Data Arrived at EDR: 03/01/2007
Date Made Active in Reports: 04/10/2007
Number of Days to Update: 40

Source: Environmental Protection Agency
Telephone: 202-564-2501
Last EDR Contact: 12/17/2008
Next Scheduled EDR Contact: 03/17/2008
Data Release Frequency: No Update Planned

DOT OPS: Incident and Accident Data

Department of Transporation, Office of Pipeline Safety Incident and Accident data.

Date of Government Version: 07/31/2012
Date Data Arrived at EDR: 08/07/2012
Date Made Active in Reports: 09/18/2012
Number of Days to Update: 42

Source: Department of Transporation, Office of Pipeline Safety
Telephone: 202-366-4595
Last EDR Contact: 05/04/2016
Next Scheduled EDR Contact: 08/15/2016
Data Release Frequency: Varies

CONSENT: Superfund (CERCLA) Consent Decrees

Major legal settlements that establish responsibility and standards for cleanup at NPL (Superfund) sites. Released periodically by United States District Courts after settlement by parties to litigation matters.

Date of Government Version: 12/31/2014
Date Data Arrived at EDR: 04/17/2015
Date Made Active in Reports: 06/02/2015
Number of Days to Update: 46

Source: Department of Justice, Consent Decree Library
Telephone: Varies
Last EDR Contact: 03/24/2016
Next Scheduled EDR Contact: 07/11/2016
Data Release Frequency: Varies

BRS: Biennial Reporting System

The Biennial Reporting System is a national system administered by the EPA that collects data on the generation and management of hazardous waste. BRS captures detailed data from two groups: Large Quantity Generators (LQG) and Treatment, Storage, and Disposal Facilities.

Date of Government Version: 12/31/2013
Date Data Arrived at EDR: 02/24/2015
Date Made Active in Reports: 09/30/2015
Number of Days to Update: 218

Source: EPA/NTIS
Telephone: 800-424-9346
Last EDR Contact: 05/27/2016
Next Scheduled EDR Contact: 09/05/2016
Data Release Frequency: Biennially

INDIAN RESERV: Indian Reservations

This map layer portrays Indian administered lands of the United States that have any area equal to or greater than 640 acres.

Date of Government Version: 12/31/2005
Date Data Arrived at EDR: 12/08/2006
Date Made Active in Reports: 01/11/2007
Number of Days to Update: 34

Source: USGS
Telephone: 202-208-3710
Last EDR Contact: 04/15/2016
Next Scheduled EDR Contact: 07/25/2016
Data Release Frequency: Semi-Annually

FUSRAP: Formerly Utilized Sites Remedial Action Program

DOE established the Formerly Utilized Sites Remedial Action Program (FUSRAP) in 1974 to remediate sites where radioactive contamination remained from Manhattan Project and early U.S. Atomic Energy Commission (AEC) operations.

Date of Government Version: 03/11/2016
Date Data Arrived at EDR: 03/15/2016
Date Made Active in Reports: 06/03/2016
Number of Days to Update: 80

Source: Department of Energy
Telephone: 202-586-3559
Last EDR Contact: 05/09/2016
Next Scheduled EDR Contact: 08/22/2016
Data Release Frequency: Varies

UMTRA: Uranium Mill Tailings Sites

Uranium ore was mined by private companies for federal government use in national defense programs. When the mills shut down, large piles of the sand-like material (mill tailings) remain after uranium has been extracted from the ore. Levels of human exposure to radioactive materials from the piles are low; however, in some cases tailings were used as construction materials before the potential health hazards of the tailings were recognized.

Date of Government Version: 09/14/2010
Date Data Arrived at EDR: 10/07/2011
Date Made Active in Reports: 03/01/2012
Number of Days to Update: 146

Source: Department of Energy
Telephone: 505-845-0011
Last EDR Contact: 05/23/2016
Next Scheduled EDR Contact: 09/05/2016
Data Release Frequency: Varies

LEAD SMELTER 1: Lead Smelter Sites
A listing of former lead smelter site locations.

Date of Government Version: 11/25/2014
Date Data Arrived at EDR: 11/26/2014
Date Made Active in Reports: 01/29/2015
Number of Days to Update: 64

Source: Environmental Protection Agency
Telephone: 703-603-8787
Last EDR Contact: 04/07/2016
Next Scheduled EDR Contact: 07/18/2016
Data Release Frequency: Varies

LEAD SMELTER 2: Lead Smelter Sites
A list of several hundred sites in the U.S. where secondary lead smelting was done from 1931and 1964. These sites may pose a threat to public health through ingestion or inhalation of contaminated soil or dust

Date of Government Version: 04/05/2001
Date Data Arrived at EDR: 10/27/2010
Date Made Active in Reports: 12/02/2010
Number of Days to Update: 36

Source: American Journal of Public Health
Telephone: 703-305-6451
Last EDR Contact: 12/02/2009
Next Scheduled EDR Contact: N/A
Data Release Frequency: No Update Planned

US AIRS (AFS): Aerometric Information Retrieval System Facility Subsystem (AFS)
The database is a sub-system of Aerometric Information Retrieval System (AIRS). AFS contains compliance data on air pollution point sources regulated by the U.S. EPA and/or state and local air regulatory agencies. This information comes from source reports by various stationary sources of air pollution, such as electric power plants, steel mills, factories, and universities, and provides information about the air pollutants they produce. Action, air program, air program pollutant, and general level plant data. It is used to track emissions and compliance data from industrial plants.

Date of Government Version: 10/20/2015
Date Data Arrived at EDR: 10/27/2015
Date Made Active in Reports: 01/04/2016
Number of Days to Update: 69

Source: EPA
Telephone: 202-564-2496
Last EDR Contact: 06/22/2016
Next Scheduled EDR Contact: 10/10/2016
Data Release Frequency: Annually

US AIRS MINOR: Air Facility System Data
A listing of minor source facilities.

Date of Government Version: 10/20/2015
Date Data Arrived at EDR: 10/27/2015
Date Made Active in Reports: 01/04/2016
Number of Days to Update: 69

Source: EPA
Telephone: 202-564-2496
Last EDR Contact: 06/22/2016
Next Scheduled EDR Contact: 10/10/2016
Data Release Frequency: Annually

US MINES: Mines Master Index File
Contains all mine identification numbers issued for mines active or opened since 1971. The data also includes violation information.

Date of Government Version: 02/09/2016
Date Data Arrived at EDR: 03/02/2016
Date Made Active in Reports: 04/15/2016
Number of Days to Update: 44

Source: Department of Labor, Mine Safety and Health Administration
Telephone: 303-231-5959
Last EDR Contact: 06/02/2016
Next Scheduled EDR Contact: 09/12/2016
Data Release Frequency: Semi-Annually

US MINES 2: Ferrous and Nonferrous Metal Mines Database Listing
This map layer includes ferrous (ferrous metal mines are facilities that extract ferrous metals, such as iron ore or molybdenum) and nonferrous (Nonferrous metal mines are facilities that extract nonferrous metals, such as gold, silver, copper, zinc, and lead) metal mines in the United States.

Date of Government Version: 12/05/2005
Date Data Arrived at EDR: 02/29/2008
Date Made Active in Reports: 04/18/2008
Number of Days to Update: 49

Source: USGS
Telephone: 703-648-7709
Last EDR Contact: 06/03/2016
Next Scheduled EDR Contact: 09/12/2016
Data Release Frequency: Varies

US MINES 3: Active Mines & Mineral Plants Database Listing

Active Mines and Mineral Processing Plant operations for commodities monitored by the Minerals Information Team of the USGS.

Date of Government Version: 04/14/2011
Date Data Arrived at EDR: 06/08/2011
Date Made Active in Reports: 09/13/2011
Number of Days to Update: 97

Source: USGS
Telephone: 703-648-7709
Last EDR Contact: 06/03/2016
Next Scheduled EDR Contact: 09/12/2016
Data Release Frequency: Varies

FINDS: Facility Index System/Facility Registry System

Facility Index System. FINDS contains both facility information and 'pointers' to other sources that contain more detail. EDR includes the following FINDS databases in this report: PCS (Permit Compliance System), AIRS (Aerometric Information Retrieval System), DOCKET (Enforcement Docket used to manage and track information on civil judicial enforcement cases for all environmental statutes), FURS (Federal Underground Injection Control), C-DOCKET (Criminal Docket System used to track criminal enforcement actions for all environmental statutes), FFIS (Federal Facilities Information System), STATE (State Environmental Laws and Statutes), and PADS (PCB Activity Data System).

Date of Government Version: 07/20/2015
Date Data Arrived at EDR: 09/09/2015
Date Made Active in Reports: 11/03/2015
Number of Days to Update: 55

Source: EPA
Telephone: (415) 947-8000
Last EDR Contact: 06/08/2016
Next Scheduled EDR Contact: 09/19/2016
Data Release Frequency: Quarterly

UXO: Unexploded Ordnance Sites

A listing of unexploded ordnance site locations

Date of Government Version: 10/25/2015
Date Data Arrived at EDR: 01/29/2016
Date Made Active in Reports: 04/05/2016
Number of Days to Update: 67

Source: Department of Defense
Telephone: 571-373-0407
Last EDR Contact: 06/20/2016
Next Scheduled EDR Contact: 10/03/2016
Data Release Frequency: Varies

DOCKET HWC: Hazardous Waste Compliance Docket Listing

A complete list of the Federal Agency Hazardous Waste Compliance Docket Facilities.

Date of Government Version: 03/01/2016
Date Data Arrived at EDR: 03/03/2016
Date Made Active in Reports: 04/05/2016
Number of Days to Update: 33

Source: Environmental Protection Agency
Telephone: 202-564-0527
Last EDR Contact: 05/25/2016
Next Scheduled EDR Contact: 09/12/2016
Data Release Frequency: Varies

CA BOND EXP. PLAN: Bond Expenditure Plan

Department of Health Services developed a site-specific expenditure plan as the basis for an appropriation of Hazardous Substance Cleanup Bond Act funds. It is not updated.

Date of Government Version: 01/01/1989
Date Data Arrived at EDR: 07/27/1994
Date Made Active in Reports: 08/02/1994
Number of Days to Update: 6

Source: Department of Health Services
Telephone: 916-255-2118
Last EDR Contact: 05/31/1994
Next Scheduled EDR Contact: N/A
Data Release Frequency: No Update Planned

CORTESE: "Cortese" Hazardous Waste & Substances Sites List

The sites for the list are designated by the State Water Resource Control Board (LUST), the Integrated Waste Board (SWF/LS), and the Department of Toxic Substances Control (Cal-Sites).

Date of Government Version: 03/28/2016
Date Data Arrived at EDR: 03/30/2016
Date Made Active in Reports: 05/09/2016
Number of Days to Update: 40

Source: CAL EPA/Office of Emergency Information
Telephone: 916-323-3400
Last EDR Contact: 03/30/2016
Next Scheduled EDR Contact: 07/11/2016
Data Release Frequency: Quarterly

DRYCLEANERS: Cleaner Facilities

A list of drycleaner related facilities that have EPA ID numbers. These are facilities with certain SIC codes: power laundries, family and commercial; garment pressing and cleaner's agents; linen supply; coin-operated laundries and cleaning; drycleaning plants, except rugs; carpet and upholster cleaning; industrial launderers; laundry and garment services.

Date of Government Version: 02/08/2016
Date Data Arrived at EDR: 02/24/2016
Date Made Active in Reports: 04/01/2016
Number of Days to Update: 37

Source: Department of Toxic Substance Control
Telephone: 916-327-4498
Last EDR Contact: 06/02/2016
Next Scheduled EDR Contact: 09/19/2016
Data Release Frequency: Annually

EMI: Emissions Inventory Data

Toxics and criteria pollutant emissions data collected by the ARB and local air pollution agencies.

Date of Government Version: 12/31/2014
Date Data Arrived at EDR: 03/22/2016
Date Made Active in Reports: 05/09/2016
Number of Days to Update: 48

Source: California Air Resources Board
Telephone: 916-322-2990
Last EDR Contact: 06/22/2016
Next Scheduled EDR Contact: 10/03/2016
Data Release Frequency: Varies

ENF: Enforcement Action Listing

A listing of Water Board Enforcement Actions. Formal is everything except Oral/Verbal Communication, Notice of Violation, Expedited Payment Letter, and Staff Enforcement Letter.

Date of Government Version: 01/26/2016
Date Data Arrived at EDR: 01/29/2016
Date Made Active in Reports: 03/22/2016
Number of Days to Update: 53

Source: State Water Resoruces Control Board
Telephone: 916-445-9379
Last EDR Contact: 05/23/2016
Next Scheduled EDR Contact: 08/08/2016
Data Release Frequency: Varies

Financial Assurance 1: Financial Assurance Information Listing

Financial Assurance information

Date of Government Version: 04/25/2016
Date Data Arrived at EDR: 04/29/2016
Date Made Active in Reports: 06/21/2016
Number of Days to Update: 53

Source: Department of Toxic Substances Control
Telephone: 916-255-3628
Last EDR Contact: 04/21/2016
Next Scheduled EDR Contact: 08/08/2016
Data Release Frequency: Varies

Financial Assurance 2: Financial Assurance Information Listing

A listing of financial assurance information for solid waste facilities. Financial assurance is intended to ensure that resources are available to pay for the cost of closure, post-closure care, and corrective measures if the owner or operator of a regulated facility is unable or unwilling to pay.

Date of Government Version: 02/17/2016
Date Data Arrived at EDR: 02/23/2016
Date Made Active in Reports: 04/01/2016
Number of Days to Update: 38

Source: California Integrated Waste Management Board
Telephone: 916-341-6066
Last EDR Contact: 05/25/2016
Next Scheduled EDR Contact: 08/29/2016
Data Release Frequency: Varies

HAZNET: Facility and Manifest Data

Facility and Manifest Data. The data is extracted from the copies of hazardous waste manifests received each year by the DTSC. The annual volume of manifests is typically 700,000 - 1,000,000 annually, representing approximately 350,000 - 500,000 shipments. Data are from the manifests submitted without correction, and therefore many contain some invalid values for data elements such as generator ID, TSD ID, waste category, and disposal method. This database begins with calendar year 1993.

Date of Government Version: 12/31/2014
Date Data Arrived at EDR: 10/14/2015
Date Made Active in Reports: 12/11/2015
Number of Days to Update: 58

Source: California Environmental Protection Agency
Telephone: 916-255-1136
Last EDR Contact: 04/15/2016
Next Scheduled EDR Contact: 07/25/2016
Data Release Frequency: Annually

HIST CORTESE: Hazardous Waste & Substance Site List

The sites for the list are designated by the State Water Resource Control Board [LUST], the Integrated Waste Board [SWF/LS], and the Department of Toxic Substances Control [CALSITES]. This listing is no longer updated by the state agency.

Date of Government Version: 04/01/2001
Date Data Arrived at EDR: 01/22/2009
Date Made Active in Reports: 04/08/2009
Number of Days to Update: 76

Source: Department of Toxic Substances Control
Telephone: 916-323-3400
Last EDR Contact: 01/22/2009
Next Scheduled EDR Contact: N/A
Data Release Frequency: No Update Planned

HWP: EnviroStor Permitted Facilities Listing

Detailed information on permitted hazardous waste facilities and corrective action ("cleanups") tracked in EnviroStor.

Date of Government Version: 02/22/2016
Date Data Arrived at EDR: 02/24/2016
Date Made Active in Reports: 04/01/2016
Number of Days to Update: 37

Source: Department of Toxic Substances Control
Telephone: 916-323-3400
Last EDR Contact: 05/25/2016
Next Scheduled EDR Contact: 09/05/2016
Data Release Frequency: Quarterly

HWT: Registered Hazardous Waste Transporter Database

A listing of hazardous waste transporters. In California, unless specifically exempted, it is unlawful for any person to transport hazardous wastes unless the person holds a valid registration issued by DTSC. A hazardous waste transporter registration is valid for one year and is assigned a unique registration number.

Date of Government Version: 04/11/2016
Date Data Arrived at EDR: 04/12/2016
Date Made Active in Reports: 06/01/2016
Number of Days to Update: 50

Source: Department of Toxic Substances Control
Telephone: 916-440-7145
Last EDR Contact: 04/12/2016
Next Scheduled EDR Contact: 07/25/2016
Data Release Frequency: Quarterly

MINES: Mines Site Location Listing

A listing of mine site locations from the Office of Mine Reclamation.

Date of Government Version: 03/15/2016
Date Data Arrived at EDR: 03/16/2016
Date Made Active in Reports: 05/09/2016
Number of Days to Update: 54

Source: Department of Conservation
Telephone: 916-322-1080
Last EDR Contact: 06/14/2016
Next Scheduled EDR Contact: 09/26/2016
Data Release Frequency: Varies

MWMP: Medical Waste Management Program Listing

The Medical Waste Management Program (MWMP) ensures the proper handling and disposal of medical waste by permitting and inspecting medical waste Offsite Treatment Facilities (PDF) and Transfer Stations (PDF) throughout the state. MWMP also oversees all Medical Waste Transporters.

Date of Government Version: 02/29/2016
Date Data Arrived at EDR: 03/08/2016
Date Made Active in Reports: 05/04/2016
Number of Days to Update: 57

Source: Department of Public Health
Telephone: 916-558-1784
Last EDR Contact: 06/07/2016
Next Scheduled EDR Contact: 09/19/2016
Data Release Frequency: Varies

NPDES: NPDES Permits Listing

A listing of NPDES permits, including stormwater.

Date of Government Version: 02/16/2016
Date Data Arrived at EDR: 02/17/2016
Date Made Active in Reports: 04/01/2016
Number of Days to Update: 44

Source: State Water Resources Control Board
Telephone: 916-445-9379
Last EDR Contact: 05/18/2016
Next Scheduled EDR Contact: 08/29/2016
Data Release Frequency: Quarterly

PEST LIC: Pesticide Regulation Licenses Listing

A listing of licenses and certificates issued by the Department of Pesticide Regulation. The DPR issues licenses and/or certificates to: Persons and businesses that apply or sell pesticides; Pest control dealers and brokers; Persons who advise on agricultural pesticide applications.

Date of Government Version: 03/07/2016
Date Data Arrived at EDR: 03/08/2016
Date Made Active in Reports: 05/16/2016
Number of Days to Update: 69

Source: Department of Pesticide Regulation
Telephone: 916-445-4038
Last EDR Contact: 06/07/2016
Next Scheduled EDR Contact: 09/19/2016
Data Release Frequency: Quarterly

PROC: Certified Processors Database

A listing of certified processors.

Date of Government Version: 03/15/2016
Date Data Arrived at EDR: 03/16/2016
Date Made Active in Reports: 05/09/2016
Number of Days to Update: 54

Source: Department of Conservation
Telephone: 916-323-3836
Last EDR Contact: 06/14/2016
Next Scheduled EDR Contact: 09/26/2016
Data Release Frequency: Quarterly

NOTIFY 65: Proposition 65 Records

Listings of all Proposition 65 incidents reported to counties by the State Water Resources Control Board and the Regional Water Quality Control Board. This database is no longer updated by the reporting agency.

Date of Government Version: 09/10/2015
Date Data Arrived at EDR: 01/05/2016
Date Made Active in Reports: 02/12/2016
Number of Days to Update: 38

Source: State Water Resources Control Board
Telephone: 916-445-3846
Last EDR Contact: 06/15/2016
Next Scheduled EDR Contact: 10/03/2016
Data Release Frequency: No Update Planned

UIC: UIC Listing

A listing of wells identified as underground injection wells, in the California Oil and Gas Wells database.

Date of Government Version: 02/12/2016
Date Data Arrived at EDR: 03/16/2016
Date Made Active in Reports: 06/13/2016
Number of Days to Update: 89

Source: Deaprtment of Conservation
Telephone: 916-445-2408
Last EDR Contact: 06/16/2016
Next Scheduled EDR Contact: 09/26/2016
Data Release Frequency: Varies

WASTEWATER PITS: Oil Wastewater Pits Listing

Water officials discovered that oil producers have been dumping chemical-laden wastewater into hundreds of unlined pits that are operating without proper permits. Inspections completed by the Central Valley Regional Water Quality Control Board revealed the existence of previously unidentified waste sites. The water board?s review found that more than one-third of the region?s active disposal pits are operating without permission.

Date of Government Version: 04/15/2015
Date Data Arrived at EDR: 04/17/2015
Date Made Active in Reports: 06/23/2015
Number of Days to Update: 67

Source: RWQCB, Central Valley Region
Telephone: 559-445-5577
Last EDR Contact: 01/15/2016
Next Scheduled EDR Contact: 04/25/2016
Data Release Frequency: Varies

WDS: Waste Discharge System

Sites which have been issued waste discharge requirements.

Date of Government Version: 06/19/2007
Date Data Arrived at EDR: 06/20/2007
Date Made Active in Reports: 06/29/2007
Number of Days to Update: 9

Source: State Water Resources Control Board
Telephone: 916-341-5227
Last EDR Contact: 05/20/2016
Next Scheduled EDR Contact: 09/05/2016
Data Release Frequency: Quarterly

WIP: Well Investigation Program Case List
Well Investigation Program case in the San Gabriel and San Fernando Valley area.

Date of Government Version: 07/03/2009
Date Data Arrived at EDR: 07/21/2009
Date Made Active in Reports: 08/03/2009
Number of Days to Update: 13

Source: Los Angeles Water Quality Control Board
Telephone: 213-576-6726
Last EDR Contact: 03/28/2016
Next Scheduled EDR Contact: 07/11/2016
Data Release Frequency: Varies

FUELS PROGRAM: EPA Fuels Program Registered Listing
This listing includes facilities that are registered under the Part 80 (Code of Federal Regulations) EPA Fuels Programs. All companies now are required to submit new and updated registrations.

Date of Government Version: 02/22/2016
Date Data Arrived at EDR: 02/24/2016
Date Made Active in Reports: 05/20/2016
Number of Days to Update: 86

Source: EPA
Telephone: 800-385-6164
Last EDR Contact: 05/25/2016
Next Scheduled EDR Contact: 09/05/2016
Data Release Frequency: Quarterly

ECHO: Enforcement & Compliance History Information
ECHO provides integrated compliance and enforcement information for about 800,000 regulated facilities nationwide.

Date of Government Version: 09/20/2015
Date Data Arrived at EDR: 09/23/2015
Date Made Active in Reports: 01/04/2016
Number of Days to Update: 103

Source: Environmental Protection Agency
Telephone: 202-564-2280
Last EDR Contact: 06/22/2016
Next Scheduled EDR Contact: 10/03/2016
Data Release Frequency: Quarterly

**EDR HIGH RISK HISTORICAL RECORDS**

***EDR Exclusive Records***

EDR MGP: EDR Proprietary Manufactured Gas Plants
The EDR Proprietary Manufactured Gas Plant Database includes records of coal gas plants (manufactured gas plants) compiled by EDR's researchers. Manufactured gas sites were used in the United States from the 1800's to 1950's to produce a gas that could be distributed and used as fuel. These plants used whale oil, rosin, coal, or a mixture of coal, oil, and water that also produced a significant amount of waste. Many of the byproducts of the gas production, such as coal tar (oily waste containing volatile and non-volatile chemicals), sludges, oils and other compounds are potentially hazardous to human health and the environment. The byproduct from this process was frequently disposed of directly at the plant site and can remain or spread slowly, serving as a continuous source of soil and groundwater contamination.

Date of Government Version: N/A
Date Data Arrived at EDR: N/A
Date Made Active in Reports: N/A
Number of Days to Update: N/A

Source: EDR, Inc.
Telephone: N/A
Last EDR Contact: N/A
Next Scheduled EDR Contact: N/A
Data Release Frequency: No Update Planned

EDR Hist Auto: EDR Exclusive Historic Gas Stations
EDR has searched selected national collections of business directories and has collected listings of potential gas station/filling station/service station sites that were available to EDR researchers. EDR's review was limited to those categories of sources that might, in EDR's opinion, include gas station/filling station/service station establishments. The categories reviewed included, but were not limited to gas, gas station, gasoline station, filling station, auto, automobile repair, auto service station, service station, etc. This database falls within a category of information EDR classifies as "High Risk Historical Records", or HRHR. EDR's HRHR effort presents unique and sometimes proprietary data about past sites and operations that typically create environmental concerns, but may not show up in current government records searches.

Date of Government Version: N/A
Date Data Arrived at EDR: N/A
Date Made Active in Reports: N/A
Number of Days to Update: N/A

Source: EDR, Inc.
Telephone: N/A
Last EDR Contact: N/A
Next Scheduled EDR Contact: N/A
Data Release Frequency: Varies

EDR Hist Cleaner: EDR Exclusive Historic Dry Cleaners

EDR has searched selected national collections of business directories and has collected listings of potential dry cleaner sites that were available to EDR researchers. EDR's review was limited to those categories of sources that might, in EDR's opinion, include dry cleaning establishments. The categories reviewed included, but were not limited to dry cleaners, cleaners, laundry, laundromat, cleaning/laundry, wash & dry etc. This database falls within a category of information EDR classifies as "High Risk Historical Records", or HRHR. EDR's HRHR effort presents unique and sometimes proprietary data about past sites and operations that typically create environmental concerns, but may not show up in current government records searches.

Date of Government Version: N/A
Date Data Arrived at EDR: N/A
Date Made Active in Reports: N/A
Number of Days to Update: N/A

Source: EDR, Inc.
Telephone: N/A
Last EDR Contact: N/A
Next Scheduled EDR Contact: N/A
Data Release Frequency: Varies

**EDR RECOVERED GOVERNMENT ARCHIVES**

***Exclusive Recovered Govt. Archives***

RGA LF: Recovered Government Archive Solid Waste Facilities List

The EDR Recovered Government Archive Landfill database provides a list of landfills derived from historical databases and includes many records that no longer appear in current government lists. Compiled from Records formerly available from the Department of Resources Recycling and Recovery in California.

Date of Government Version: N/A
Date Data Arrived at EDR: 07/01/2013
Date Made Active in Reports: 01/13/2014
Number of Days to Update: 196

Source: Department of Resources Recycling and Recovery
Telephone: N/A
Last EDR Contact: 06/01/2012
Next Scheduled EDR Contact: N/A
Data Release Frequency: Varies

RGA LUST: Recovered Government Archive Leaking Underground Storage Tank

The EDR Recovered Government Archive Leaking Underground Storage Tank database provides a list of LUST incidents derived from historical databases and includes many records that no longer appear in current government lists. Compiled from Records formerly available from the State Water Resources Control Board in California.

Date of Government Version: N/A
Date Data Arrived at EDR: 07/01/2013
Date Made Active in Reports: 12/30/2013
Number of Days to Update: 182

Source: State Water Resources Control Board
Telephone: N/A
Last EDR Contact: 06/01/2012
Next Scheduled EDR Contact: N/A
Data Release Frequency: Varies

**COUNTY RECORDS**

ALAMEDA COUNTY:

Contaminated Sites

A listing of contaminated sites overseen by the Toxic Release Program (oil and groundwater contamination from chemical releases and spills) and the Leaking Underground Storage Tank Program (soil and ground water contamination from leaking petroleum USTs).

Date of Government Version: 04/12/2016
Date Data Arrived at EDR: 04/14/2016
Date Made Active in Reports: 06/01/2016
Number of Days to Update: 48

Source: Alameda County Environmental Health Services
Telephone: 510-567-6700
Last EDR Contact: 04/11/2016
Next Scheduled EDR Contact: 07/25/2016
Data Release Frequency: Semi-Annually

Underground Tanks
Underground storage tank sites located in Alameda county.

Date of Government Version: 04/06/2016
Date Data Arrived at EDR: 04/14/2016
Date Made Active in Reports: 06/01/2016
Number of Days to Update: 48

Source: Alameda County Environmental Health Services
Telephone: 510-567-6700
Last EDR Contact: 04/11/2016
Next Scheduled EDR Contact: 07/25/2016
Data Release Frequency: Semi-Annually

AMADOR COUNTY:

CUPA Facility List
Cupa Facility List

Date of Government Version: 06/06/2016
Date Data Arrived at EDR: 06/09/2016
Date Made Active in Reports: 06/21/2016
Number of Days to Update: 12

Source: Amador County Environmental Health
Telephone: 209-223-6439
Last EDR Contact: 06/02/2016
Next Scheduled EDR Contact: 09/19/2016
Data Release Frequency: Varies

BUTTE COUNTY:

CUPA Facility Listing
Cupa facility list.

Date of Government Version: 06/02/2016
Date Data Arrived at EDR: 06/03/2016
Date Made Active in Reports: 06/21/2016
Number of Days to Update: 18

Source: Public Health Department
Telephone: 530-538-7149
Last EDR Contact: 05/23/2016
Next Scheduled EDR Contact: 07/25/2016
Data Release Frequency: No Update Planned

CALVERAS COUNTY:

CUPA Facility Listing
Cupa Facility Listing

Date of Government Version: 04/29/2016
Date Data Arrived at EDR: 05/03/2016
Date Made Active in Reports: 06/17/2016
Number of Days to Update: 45

Source: Calveras County Environmental Health
Telephone: 209-754-6399
Last EDR Contact: 03/28/2016
Next Scheduled EDR Contact: 07/11/2016
Data Release Frequency: Quarterly

COLUSA COUNTY:

CUPA Facility List
Cupa facility list.

Date of Government Version: 05/25/2016
Date Data Arrived at EDR: 05/26/2016
Date Made Active in Reports: 06/17/2016
Number of Days to Update: 22

Source: Health & Human Services
Telephone: 530-458-0396
Last EDR Contact: 05/23/2016
Next Scheduled EDR Contact: 08/22/2016
Data Release Frequency: Varies

CONTRA COSTA COUNTY:

Site List
List includes sites from the underground tank, hazardous waste generator and business plan/2185 programs.

Date of Government Version: 02/24/2016
Date Data Arrived at EDR: 02/26/2016
Date Made Active in Reports: 04/01/2016
Number of Days to Update: 35

Source: Contra Costa Health Services Department
Telephone: 925-646-2286
Last EDR Contact: 05/02/2016
Next Scheduled EDR Contact: 08/15/2016
Data Release Frequency: Semi-Annually

DEL NORTE COUNTY:

CUPA Facility List
Cupa Facility list

Date of Government Version: 04/08/2016
Date Data Arrived at EDR: 05/03/2016
Date Made Active in Reports: 06/22/2016
Number of Days to Update: 50

Source: Del Norte County Environmental Health Division
Telephone: 707-465-0426
Last EDR Contact: 04/29/2016
Next Scheduled EDR Contact: 08/15/2016
Data Release Frequency: Varies

EL DORADO COUNTY:

CUPA Facility List
CUPA facility list.

Date of Government Version: 02/22/2016
Date Data Arrived at EDR: 02/24/2016
Date Made Active in Reports: 04/01/2016
Number of Days to Update: 37

Source: El Dorado County Environmental Management Department
Telephone: 530-621-6623
Last EDR Contact: 05/02/2016
Next Scheduled EDR Contact: 08/15/2016
Data Release Frequency: Varies

FRESNO COUNTY:

CUPA Resources List
Certified Unified Program Agency. CUPA's are responsible for implementing a unified hazardous materials and hazardous waste management regulatory program. The agency provides oversight of businesses that deal with hazardous materials, operate underground storage tanks or aboveground storage tanks.

Date of Government Version: 04/04/2016
Date Data Arrived at EDR: 04/06/2016
Date Made Active in Reports: 05/04/2016
Number of Days to Update: 28

Source: Dept. of Community Health
Telephone: 559-445-3271
Last EDR Contact: 04/04/2016
Next Scheduled EDR Contact: 07/18/2016
Data Release Frequency: Semi-Annually

HUMBOLDT COUNTY:

CUPA Facility List
CUPA facility list.

Date of Government Version: 03/16/2016
Date Data Arrived at EDR: 03/21/2016
Date Made Active in Reports: 05/04/2016
Number of Days to Update: 44

Source: Humboldt County Environmental Health
Telephone: N/A
Last EDR Contact: 05/23/2016
Next Scheduled EDR Contact: 09/05/2016
Data Release Frequency: Varies

IMPERIAL COUNTY:

CUPA Facility List
Cupa facility list.

Date of Government Version: 04/26/2016
Date Data Arrived at EDR: 04/28/2016
Date Made Active in Reports: 06/17/2016
Number of Days to Update: 50

Source: San Diego Border Field Office
Telephone: 760-339-2777
Last EDR Contact: 04/21/2016
Next Scheduled EDR Contact: 08/08/2016
Data Release Frequency: Varies

INYO COUNTY:

CUPA Facility List
Cupa facility list.

Date of Government Version: 09/10/2013
Date Data Arrived at EDR: 09/11/2013
Date Made Active in Reports: 10/14/2013
Number of Days to Update: 33

Source: Inyo County Environmental Health Services
Telephone: 760-878-0238
Last EDR Contact: 05/23/2016
Next Scheduled EDR Contact: 09/05/2016
Data Release Frequency: Varies

KERN COUNTY:

Underground Storage Tank Sites & Tank Listing
Kern County Sites and Tanks Listing.

Date of Government Version: 03/01/2016
Date Data Arrived at EDR: 03/03/2016
Date Made Active in Reports: 05/09/2016
Number of Days to Update: 67

Source: Kern County Environment Health Services Department
Telephone: 661-862-8700
Last EDR Contact: 05/09/2016
Next Scheduled EDR Contact: 08/22/2016
Data Release Frequency: Quarterly

KINGS COUNTY:

CUPA Facility List
A listing of sites included in the county's Certified Unified Program Agency database. California's Secretary for Environmental Protection established the unified hazardous materials and hazardous waste regulatory program as required by chapter 6.11 of the California Health and Safety Code. The Unified Program consolidates the administration, permits, inspections, and enforcement activities.

Date of Government Version: 05/25/2016
Date Data Arrived at EDR: 05/27/2016
Date Made Active in Reports: 06/22/2016
Number of Days to Update: 26

Source: Kings County Department of Public Health
Telephone: 559-584-1411
Last EDR Contact: 05/23/2016
Next Scheduled EDR Contact: 09/05/2016
Data Release Frequency: Varies

LAKE COUNTY:

CUPA Facility List
Cupa facility list

Date of Government Version: 04/26/2016
Date Data Arrived at EDR: 04/27/2016
Date Made Active in Reports: 06/17/2016
Number of Days to Update: 51

Source: Lake County Environmental Health
Telephone: 707-263-1164
Last EDR Contact: 04/18/2016
Next Scheduled EDR Contact: 08/01/2016
Data Release Frequency: Varies

LOS ANGELES COUNTY:

San Gabriel Valley Areas of Concern
San Gabriel Valley areas where VOC contamination is at or above the MCL as designated by region 9 EPA office.

Date of Government Version: 03/30/2009
Date Data Arrived at EDR: 03/31/2009
Date Made Active in Reports: 10/23/2009
Number of Days to Update: 206

Source: EPA Region 9
Telephone: 415-972-3178
Last EDR Contact: 06/15/2016
Next Scheduled EDR Contact: 07/04/2016
Data Release Frequency: No Update Planned

HMS: Street Number List
Industrial Waste and Underground Storage Tank Sites.

Date of Government Version: 03/30/2016
Date Data Arrived at EDR: 04/01/2016
Date Made Active in Reports: 05/09/2016
Number of Days to Update: 38

Source: Department of Public Works
Telephone: 626-458-3517
Last EDR Contact: 04/01/2016
Next Scheduled EDR Contact: 07/25/2016
Data Release Frequency: Semi-Annually

List of Solid Waste Facilities
Solid Waste Facilities in Los Angeles County.

Date of Government Version: 04/18/2016
Date Data Arrived at EDR: 04/20/2016
Date Made Active in Reports: 06/01/2016
Number of Days to Update: 42

Source: La County Department of Public Works
Telephone: 818-458-5185
Last EDR Contact: 04/20/2016
Next Scheduled EDR Contact: 08/01/2016
Data Release Frequency: Varies

City of Los Angeles Landfills
Landfills owned and maintained by the City of Los Angeles.

Date of Government Version: 01/01/2016
Date Data Arrived at EDR: 01/26/2016
Date Made Active in Reports: 03/22/2016
Number of Days to Update: 56

Source: Engineering & Construction Division
Telephone: 213-473-7869
Last EDR Contact: 04/18/2016
Next Scheduled EDR Contact: 08/01/2016
Data Release Frequency: Varies

Site Mitigation List
Industrial sites that have had some sort of spill or complaint.

Date of Government Version: 03/29/2016
Date Data Arrived at EDR: 04/06/2016
Date Made Active in Reports: 06/13/2016
Number of Days to Update: 68

Source: Community Health Services
Telephone: 323-890-7806
Last EDR Contact: 03/28/2016
Next Scheduled EDR Contact: 08/01/2016
Data Release Frequency: Annually

City of El Segundo Underground Storage Tank
Underground storage tank sites located in El Segundo city.

Date of Government Version: 03/30/2015
Date Data Arrived at EDR: 04/02/2015
Date Made Active in Reports: 04/13/2015
Number of Days to Update: 11

Source: City of El Segundo Fire Department
Telephone: 310-524-2236
Last EDR Contact: 04/18/2016
Next Scheduled EDR Contact: 08/01/2016
Data Release Frequency: Semi-Annually

City of Long Beach Underground Storage Tank
Underground storage tank sites located in the city of Long Beach.

Date of Government Version: 11/04/2015
Date Data Arrived at EDR: 11/13/2015
Date Made Active in Reports: 12/17/2015
Number of Days to Update: 34

Source: City of Long Beach Fire Department
Telephone: 562-570-2563
Last EDR Contact: 01/25/2016
Next Scheduled EDR Contact: 05/09/2016
Data Release Frequency: Annually

City of Torrance Underground Storage Tank
Underground storage tank sites located in the city of Torrance.

Date of Government Version: 04/05/2016
Date Data Arrived at EDR: 04/26/2016
Date Made Active in Reports: 06/01/2016
Number of Days to Update: 36

Source: City of Torrance Fire Department
Telephone: 310-618-2973
Last EDR Contact: 01/11/2016
Next Scheduled EDR Contact: 04/25/2016
Data Release Frequency: Semi-Annually

MADERA COUNTY:

CUPA Facility List
A listing of sites included in the county's Certified Unified Program Agency database. California's Secretary for Environmental Protection established the unified hazardous materials and hazardous waste regulatory program as required by chapter 6.11 of the California Health and Safety Code. The Unified Program consolidates the administration, permits, inspections, and enforcement activities.

Date of Government Version: 03/02/2016
Date Data Arrived at EDR: 03/07/2016
Date Made Active in Reports: 05/04/2016
Number of Days to Update: 58

Source: Madera County Environmental Health
Telephone: 559-675-7823
Last EDR Contact: 05/23/2016
Next Scheduled EDR Contact: 09/05/2016
Data Release Frequency: Varies

MARIN COUNTY:

Underground Storage Tank Sites
Currently permitted USTs in Marin County.

Date of Government Version: 04/07/2016
Date Data Arrived at EDR: 04/26/2016
Date Made Active in Reports: 06/01/2016
Number of Days to Update: 36

Source: Public Works Department Waste Management
Telephone: 415-499-6647
Last EDR Contact: 04/18/2016
Next Scheduled EDR Contact: 07/18/2016
Data Release Frequency: Semi-Annually

MERCED COUNTY:

CUPA Facility List
CUPA facility list.

Date of Government Version: 02/26/2016
Date Data Arrived at EDR: 03/01/2016
Date Made Active in Reports: 05/04/2016
Number of Days to Update: 64

Source: Merced County Environmental Health
Telephone: 209-381-1094
Last EDR Contact: 06/15/2016
Next Scheduled EDR Contact: 09/05/2016
Data Release Frequency: Varies

MONO COUNTY:

CUPA Facility List
CUPA Facility List

Date of Government Version: 05/25/2016
Date Data Arrived at EDR: 06/01/2016
Date Made Active in Reports: 06/22/2016
Number of Days to Update: 21

Source: Mono County Health Department
Telephone: 760-932-5580
Last EDR Contact: 05/25/2016
Next Scheduled EDR Contact: 09/12/2016
Data Release Frequency: Varies

MONTEREY COUNTY:

CUPA Facility Listing
CUPA Program listing from the Environmental Health Division.

Date of Government Version: 03/15/2016
Date Data Arrived at EDR: 03/18/2016
Date Made Active in Reports: 05/04/2016
Number of Days to Update: 47

Source: Monterey County Health Department
Telephone: 831-796-1297
Last EDR Contact: 05/23/2016
Next Scheduled EDR Contact: 09/05/2016
Data Release Frequency: Varies

NAPA COUNTY:

Sites With Reported Contamination
A listing of leaking underground storage tank sites located in Napa county.

Date of Government Version: 12/05/2011
Date Data Arrived at EDR: 12/06/2011
Date Made Active in Reports: 02/07/2012
Number of Days to Update: 63

Source: Napa County Department of Environmental Management
Telephone: 707-253-4269
Last EDR Contact: 05/25/2016
Next Scheduled EDR Contact: 09/12/2016
Data Release Frequency: No Update Planned

Closed and Operating Underground Storage Tank Sites
Underground storage tank sites located in Napa county.

Date of Government Version: 01/15/2008
Date Data Arrived at EDR: 01/16/2008
Date Made Active in Reports: 02/08/2008
Number of Days to Update: 23

Source: Napa County Department of Environmental Management
Telephone: 707-253-4269
Last EDR Contact: 05/25/2016
Next Scheduled EDR Contact: 09/12/2016
Data Release Frequency: No Update Planned

NEVADA COUNTY:

CUPA Facility List
CUPA facility list.

Date of Government Version: 04/18/2016
Date Data Arrived at EDR: 05/06/2016
Date Made Active in Reports: 06/17/2016
Number of Days to Update: 42

Source: Community Development Agency
Telephone: 530-265-1467
Last EDR Contact: 04/29/2016
Next Scheduled EDR Contact: 08/15/2016
Data Release Frequency: Varies

ORANGE COUNTY:

List of Industrial Site Cleanups
Petroleum and non-petroleum spills.

Date of Government Version: 05/01/2016
Date Data Arrived at EDR: 05/17/2016
Date Made Active in Reports: 06/21/2016
Number of Days to Update: 35

Source: Health Care Agency
Telephone: 714-834-3446
Last EDR Contact: 05/09/2016
Next Scheduled EDR Contact: 08/22/2016
Data Release Frequency: Annually

List of Underground Storage Tank Cleanups
Orange County Underground Storage Tank Cleanups (LUST).

Date of Government Version: 05/01/2016
Date Data Arrived at EDR: 05/17/2016
Date Made Active in Reports: 06/21/2016
Number of Days to Update: 35

Source: Health Care Agency
Telephone: 714-834-3446
Last EDR Contact: 05/09/2016
Next Scheduled EDR Contact: 08/22/2016
Data Release Frequency: Quarterly

List of Underground Storage Tank Facilities
Orange County Underground Storage Tank Facilities (UST).

Date of Government Version: 05/01/2016
Date Data Arrived at EDR: 05/11/2016
Date Made Active in Reports: 06/01/2016
Number of Days to Update: 21

Source: Health Care Agency
Telephone: 714-834-3446
Last EDR Contact: 05/11/2016
Next Scheduled EDR Contact: 08/22/2016
Data Release Frequency: Quarterly

PLACER COUNTY:

Master List of Facilities
List includes aboveground tanks, underground tanks and cleanup sites.

Date of Government Version: 03/07/2016
Date Data Arrived at EDR: 03/09/2016
Date Made Active in Reports: 05/04/2016
Number of Days to Update: 56

Source: Placer County Health and Human Services
Telephone: 530-745-2363
Last EDR Contact: 06/15/2016
Next Scheduled EDR Contact: 09/19/2016
Data Release Frequency: Semi-Annually

RIVERSIDE COUNTY:

Listing of Underground Tank Cleanup Sites
Riverside County Underground Storage Tank Cleanup Sites (LUST).

Date of Government Version: 04/13/2016
Date Data Arrived at EDR: 04/15/2016
Date Made Active in Reports: 05/09/2016
Number of Days to Update: 24

Source: Department of Environmental Health
Telephone: 951-358-5055
Last EDR Contact: 06/20/2016
Next Scheduled EDR Contact: 10/03/2016
Data Release Frequency: Quarterly

Underground Storage Tank Tank List
Underground storage tank sites located in Riverside county.

Date of Government Version: 04/13/2016
Date Data Arrived at EDR: 04/15/2016
Date Made Active in Reports: 06/01/2016
Number of Days to Update: 47

Source: Department of Environmental Health
Telephone: 951-358-5055
Last EDR Contact: 06/20/2016
Next Scheduled EDR Contact: 10/03/2016
Data Release Frequency: Quarterly

SACRAMENTO COUNTY:

Toxic Site Clean-Up List
List of sites where unauthorized releases of potentially hazardous materials have occurred.

Date of Government Version: 02/02/2016
Date Data Arrived at EDR: 04/06/2016
Date Made Active in Reports: 06/01/2016
Number of Days to Update: 56

Source: Sacramento County Environmental Management
Telephone: 916-875-8406
Last EDR Contact: 04/06/2016
Next Scheduled EDR Contact: 07/18/2016
Data Release Frequency: Quarterly

Master Hazardous Materials Facility List
Any business that has hazardous materials on site - hazardous material storage sites, underground storage tanks, waste generators.

Date of Government Version: 02/02/2016
Date Data Arrived at EDR: 04/06/2016
Date Made Active in Reports: 06/01/2016
Number of Days to Update: 56

Source: Sacramento County Environmental Management
Telephone: 916-875-8406
Last EDR Contact: 04/06/2016
Next Scheduled EDR Contact: 07/18/2016
Data Release Frequency: Quarterly

SAN BERNARDINO COUNTY:

Hazardous Material Permits

This listing includes underground storage tanks, medical waste handlers/generators, hazardous materials handlers, hazardous waste generators, and waste oil generators/handlers.

Date of Government Version: 03/15/2016
Date Data Arrived at EDR: 03/18/2016
Date Made Active in Reports: 05/09/2016
Number of Days to Update: 52

Source: San Bernardino County Fire Department Hazardous Materials Division
Telephone: 909-387-3041
Last EDR Contact: 05/09/2016
Next Scheduled EDR Contact: 08/22/2016
Data Release Frequency: Quarterly

SAN DIEGO COUNTY:

Hazardous Materials Management Division Database

The database includes: HE58 - This report contains the business name, site address, business phone number, establishment 'H' permit number, type of permit, and the business status. HE17 - In addition to providing the same information provided in the HE58 listing, HE17 provides inspection dates, violations received by the establishment, hazardous waste generated, the quantity, method of storage, treatment/disposal of waste and the hauler, and information on underground storage tanks. Unauthorized Release List - Includes a summary of environmental contamination cases in San Diego County (underground tank cases, non-tank cases, groundwater contamination, and soil contamination are included.)

Date of Government Version: 09/23/2013
Date Data Arrived at EDR: 09/24/2013
Date Made Active in Reports: 10/17/2013
Number of Days to Update: 23

Source: Hazardous Materials Management Division
Telephone: 619-338-2268
Last EDR Contact: 06/02/2016
Next Scheduled EDR Contact: 09/19/2016
Data Release Frequency: Quarterly

Solid Waste Facilities

San Diego County Solid Waste Facilities.

Date of Government Version: 10/31/2015
Date Data Arrived at EDR: 11/07/2015
Date Made Active in Reports: 01/04/2016
Number of Days to Update: 58

Source: Department of Health Services
Telephone: 619-338-2209
Last EDR Contact: 04/21/2016
Next Scheduled EDR Contact: 08/08/2016
Data Release Frequency: Varies

Environmental Case Listing

The listing contains all underground tank release cases and projects pertaining to properties contaminated with hazardous substances that are actively under review by the Site Assessment and Mitigation Program.

Date of Government Version: 03/23/2010
Date Data Arrived at EDR: 06/15/2010
Date Made Active in Reports: 07/09/2010
Number of Days to Update: 24

Source: San Diego County Department of Environmental Health
Telephone: 619-338-2371
Last EDR Contact: 06/02/2016
Next Scheduled EDR Contact: 09/19/2016
Data Release Frequency: No Update Planned

SAN FRANCISCO COUNTY:

Local Oversite Facilities

A listing of leaking underground storage tank sites located in San Francisco county.

Date of Government Version: 09/19/2008
Date Data Arrived at EDR: 09/19/2008
Date Made Active in Reports: 09/29/2008
Number of Days to Update: 10

Source: Department Of Public Health San Francisco County
Telephone: 415-252-3920
Last EDR Contact: 05/06/2016
Next Scheduled EDR Contact: 08/22/2016
Data Release Frequency: Quarterly

Underground Storage Tank Information
Underground storage tank sites located in San Francisco county.

Date of Government Version: 11/29/2010
Date Data Arrived at EDR: 03/10/2011
Date Made Active in Reports: 03/15/2011
Number of Days to Update: 5

Source: Department of Public Health
Telephone: 415-252-3920
Last EDR Contact: 05/06/2016
Next Scheduled EDR Contact: 08/22/2016
Data Release Frequency: Quarterly

SAN JOAQUIN COUNTY:

San Joaquin Co. UST
A listing of underground storage tank locations in San Joaquin county.

Date of Government Version: 04/06/2016
Date Data Arrived at EDR: 04/08/2016
Date Made Active in Reports: 05/04/2016
Number of Days to Update: 26

Source: Environmental Health Department
Telephone: N/A
Last EDR Contact: 06/15/2016
Next Scheduled EDR Contact: 10/03/2016
Data Release Frequency: Semi-Annually

SAN LUIS OBISPO COUNTY:

CUPA Facility List
Cupa Facility List.

Date of Government Version: 05/23/2016
Date Data Arrived at EDR: 05/24/2016
Date Made Active in Reports: 06/21/2016
Number of Days to Update: 28

Source: San Luis Obispo County Public Health Department
Telephone: 805-781-5596
Last EDR Contact: 05/23/2016
Next Scheduled EDR Contact: 09/05/2016
Data Release Frequency: Varies

SAN MATEO COUNTY:

Business Inventory
List includes Hazardous Materials Business Plan, hazardous waste generators, and underground storage tanks.

Date of Government Version: 06/02/2016
Date Data Arrived at EDR: 06/07/2016
Date Made Active in Reports: 06/22/2016
Number of Days to Update: 15

Source: San Mateo County Environmental Health Services Division
Telephone: 650-363-1921
Last EDR Contact: 05/27/2016
Next Scheduled EDR Contact: 09/26/2016
Data Release Frequency: Annually

Fuel Leak List
A listing of leaking underground storage tank sites located in San Mateo county.

Date of Government Version: 03/14/2016
Date Data Arrived at EDR: 03/15/2016
Date Made Active in Reports: 05/09/2016
Number of Days to Update: 55

Source: San Mateo County Environmental Health Services Division
Telephone: 650-363-1921
Last EDR Contact: 06/08/2016
Next Scheduled EDR Contact: 09/26/2016
Data Release Frequency: Semi-Annually

SANTA BARBARA COUNTY:

CUPA Facility Listing
CUPA Program Listing from the Environmental Health Services division.

Date of Government Version: 09/08/2011
Date Data Arrived at EDR: 09/09/2011
Date Made Active in Reports: 10/07/2011
Number of Days to Update: 28

Source: Santa Barbara County Public Health Department
Telephone: 805-686-8167
Last EDR Contact: 05/23/2016
Next Scheduled EDR Contact: 09/05/2016
Data Release Frequency: Varies

SANTA CLARA COUNTY:

Cupa Facility List
Cupa facility list

Date of Government Version: 05/25/2016
Date Data Arrived at EDR: 05/26/2016
Date Made Active in Reports: 06/22/2016
Number of Days to Update: 27

Source: Department of Environmental Health
Telephone: 408-918-1973
Last EDR Contact: 05/23/2016
Next Scheduled EDR Contact: 09/05/2016
Data Release Frequency: Varies

HIST LUST - Fuel Leak Site Activity Report
A listing of open and closed leaking underground storage tanks. This listing is no longer updated by the county. Leaking underground storage tanks are now handled by the Department of Environmental Health.

Date of Government Version: 03/29/2005
Date Data Arrived at EDR: 03/30/2005
Date Made Active in Reports: 04/21/2005
Number of Days to Update: 22

Source: Santa Clara Valley Water District
Telephone: 408-265-2600
Last EDR Contact: 03/23/2009
Next Scheduled EDR Contact: 06/22/2009
Data Release Frequency: No Update Planned

LOP Listing
A listing of leaking underground storage tanks located in Santa Clara county.

Date of Government Version: 03/03/2014
Date Data Arrived at EDR: 03/05/2014
Date Made Active in Reports: 03/18/2014
Number of Days to Update: 13

Source: Department of Environmental Health
Telephone: 408-918-3417
Last EDR Contact: 05/25/2016
Next Scheduled EDR Contact: 09/12/2016
Data Release Frequency: Annually

Hazardous Material Facilities
Hazardous material facilities, including underground storage tank sites.

Date of Government Version: 02/05/2016
Date Data Arrived at EDR: 02/10/2016
Date Made Active in Reports: 04/01/2016
Number of Days to Update: 51

Source: City of San Jose Fire Department
Telephone: 408-535-7694
Last EDR Contact: 05/23/2016
Next Scheduled EDR Contact: 08/22/2016
Data Release Frequency: Annually

SANTA CRUZ COUNTY:

CUPA Facility List
CUPA facility listing.

Date of Government Version: 05/31/2016
Date Data Arrived at EDR: 06/02/2016
Date Made Active in Reports: 06/21/2016
Number of Days to Update: 19

Source: Santa Cruz County Environmental Health
Telephone: 831-464-2761
Last EDR Contact: 05/23/2016
Next Scheduled EDR Contact: 09/05/2016
Data Release Frequency: Varies

SHASTA COUNTY:

CUPA Facility List
Cupa Facility List.

Date of Government Version: 03/18/2016
Date Data Arrived at EDR: 03/21/2016
Date Made Active in Reports: 05/04/2016
Number of Days to Update: 44

Source: Shasta County Department of Resource Management
Telephone: 530-225-5789
Last EDR Contact: 05/23/2016
Next Scheduled EDR Contact: 09/05/2016
Data Release Frequency: Varies

SOLANO COUNTY:

Leaking Underground Storage Tanks
A listing of leaking underground storage tank sites located in Solano county.

Date of Government Version: 03/14/2016
Date Data Arrived at EDR: 03/22/2016
Date Made Active in Reports: 05/09/2016
Number of Days to Update: 48

Source: Solano County Department of Environmental Management
Telephone: 707-784-6770
Last EDR Contact: 06/08/2016
Next Scheduled EDR Contact: 09/26/2016
Data Release Frequency: Quarterly

Underground Storage Tanks
Underground storage tank sites located in Solano county.

Date of Government Version: 03/14/2016
Date Data Arrived at EDR: 03/21/2016
Date Made Active in Reports: 05/04/2016
Number of Days to Update: 44

Source: Solano County Department of Environmental Management
Telephone: 707-784-6770
Last EDR Contact: 06/08/2016
Next Scheduled EDR Contact: 09/26/2016
Data Release Frequency: Quarterly

SONOMA COUNTY:

Cupa Facility List
Cupa Facility list

Date of Government Version: 04/05/2016
Date Data Arrived at EDR: 04/08/2016
Date Made Active in Reports: 05/04/2016
Number of Days to Update: 26

Source: County of Sonoma Fire & Emergency Services Department
Telephone: 707-565-1174
Last EDR Contact: 03/28/2016
Next Scheduled EDR Contact: 07/11/2016
Data Release Frequency: Varies

Leaking Underground Storage Tank Sites
A listing of leaking underground storage tank sites located in Sonoma county.

Date of Government Version: 04/01/2016
Date Data Arrived at EDR: 04/05/2016
Date Made Active in Reports: 05/09/2016
Number of Days to Update: 34

Source: Department of Health Services
Telephone: 707-565-6565
Last EDR Contact: 03/28/2016
Next Scheduled EDR Contact: 07/11/2016
Data Release Frequency: Quarterly

SUTTER COUNTY:

Underground Storage Tanks
Underground storage tank sites located in Sutter county.

Date of Government Version: 03/14/2016
Date Data Arrived at EDR: 03/15/2016
Date Made Active in Reports: 05/04/2016
Number of Days to Update: 50

Source: Sutter County Department of Agriculture
Telephone: 530-822-7500
Last EDR Contact: 06/02/2016
Next Scheduled EDR Contact: 09/19/2016
Data Release Frequency: Semi-Annually

TUOLUMNE COUNTY:

CUPA Facility List
Cupa facility list

Date of Government Version: 05/03/2016
Date Data Arrived at EDR: 05/10/2016
Date Made Active in Reports: 06/17/2016
Number of Days to Update: 38

Source: Divison of Environmental Health
Telephone: 209-533-5633
Last EDR Contact: 04/21/2016
Next Scheduled EDR Contact: 08/08/2016
Data Release Frequency: Varies

VENTURA COUNTY:

Business Plan, Hazardous Waste Producers, and Operating Underground Tanks
The BWT list indicates by site address whether the Environmental Health Division has Business Plan (B), Waste Producer (W), and/or Underground Tank (T) information.

Date of Government Version: 03/28/2016
Date Data Arrived at EDR: 04/29/2016
Date Made Active in Reports: 06/17/2016
Number of Days to Update: 49

Source: Ventura County Environmental Health Division
Telephone: 805-654-2813
Last EDR Contact: 04/25/2016
Next Scheduled EDR Contact: 08/08/2016
Data Release Frequency: Quarterly

Inventory of Illegal Abandoned and Inactive Sites
Ventura County Inventory of Closed, Illegal Abandoned, and Inactive Sites.

Date of Government Version: 12/01/2011
Date Data Arrived at EDR: 12/01/2011
Date Made Active in Reports: 01/19/2012
Number of Days to Update: 49

Source: Environmental Health Division
Telephone: 805-654-2813
Last EDR Contact: 04/04/2016
Next Scheduled EDR Contact: 07/18/2016
Data Release Frequency: Annually

Listing of Underground Tank Cleanup Sites
Ventura County Underground Storage Tank Cleanup Sites (LUST).

Date of Government Version: 05/29/2008
Date Data Arrived at EDR: 06/24/2008
Date Made Active in Reports: 07/31/2008
Number of Days to Update: 37

Source: Environmental Health Division
Telephone: 805-654-2813
Last EDR Contact: 05/13/2016
Next Scheduled EDR Contact: 08/22/2016
Data Release Frequency: Quarterly

Medical Waste Program List
To protect public health and safety and the environment from potential exposure to disease causing agents, the Environmental Health Division Medical Waste Program regulates the generation, handling, storage, treatment and disposal of medical waste throughout the County.

Date of Government Version: 03/28/2016
Date Data Arrived at EDR: 04/29/2016
Date Made Active in Reports: 06/22/2016
Number of Days to Update: 54

Source: Ventura County Resource Management Agency
Telephone: 805-654-2813
Last EDR Contact: 04/25/2016
Next Scheduled EDR Contact: 08/08/2016
Data Release Frequency: Quarterly

Underground Tank Closed Sites List
Ventura County Operating Underground Storage Tank Sites (UST)/Underground Tank Closed Sites List.

Date of Government Version: 02/26/2016
Date Data Arrived at EDR: 03/17/2016
Date Made Active in Reports: 05/04/2016
Number of Days to Update: 48

Source: Environmental Health Division
Telephone: 805-654-2813
Last EDR Contact: 06/16/2016
Next Scheduled EDR Contact: 09/26/2016
Data Release Frequency: Quarterly

YOLO COUNTY:

Underground Storage Tank Comprehensive Facility Report
Underground storage tank sites located in Yolo county.

Date of Government Version: 04/12/2016
Date Data Arrived at EDR: 04/19/2016
Date Made Active in Reports: 06/01/2016
Number of Days to Update: 43

Source: Yolo County Department of Health
Telephone: 530-666-8646
Last EDR Contact: 04/04/2016
Next Scheduled EDR Contact: 07/18/2016
Data Release Frequency: Annually

YUBA COUNTY:

CUPA Facility List
CUPA facility listing for Yuba County.

Date of Government Version: 04/29/2016
Date Data Arrived at EDR: 05/03/2016
Date Made Active in Reports: 06/17/2016
Number of Days to Update: 45

Source: Yuba County Environmental Health Department
Telephone: 530-749-7523
Last EDR Contact: 04/29/2016
Next Scheduled EDR Contact: 08/15/2016
Data Release Frequency: Varies

**OTHER DATABASE(S)**

Depending on the geographic area covered by this report, the data provided in these specialty databases may or may not be complete. For example, the existence of wetlands information data in a specific report does not mean that all wetlands in the area covered by the report are included. Moreover, the absence of any reported wetlands information does not necessarily mean that wetlands do not exist in the area covered by the report.

CT MANIFEST: Hazardous Waste Manifest Data
Facility and manifest data. Manifest is a document that lists and tracks hazardous waste from the generator through transporters to a tsd facility.

Date of Government Version: 07/30/2013
Date Data Arrived at EDR: 08/19/2013
Date Made Active in Reports: 10/03/2013
Number of Days to Update: 45

Source: Department of Energy & Environmental Protection
Telephone: 860-424-3375
Last EDR Contact: 05/13/2016
Next Scheduled EDR Contact: 08/29/2016
Data Release Frequency: No Update Planned

NJ MANIFEST: Manifest Information
Hazardous waste manifest information.

Date of Government Version: 12/31/2013
Date Data Arrived at EDR: 07/17/2015
Date Made Active in Reports: 08/12/2015
Number of Days to Update: 26

Source: Department of Environmental Protection
Telephone: N/A
Last EDR Contact: 04/12/2016
Next Scheduled EDR Contact: 07/25/2016
Data Release Frequency: Annually

NY MANIFEST: Facility and Manifest Data
Manifest is a document that lists and tracks hazardous waste from the generator through transporters to a TSD facility.

Date of Government Version: 05/01/2016
Date Data Arrived at EDR: 05/06/2016
Date Made Active in Reports: 06/17/2016
Number of Days to Update: 42

Source: Department of Environmental Conservation
Telephone: 518-402-8651
Last EDR Contact: 05/06/2016
Next Scheduled EDR Contact: 08/15/2016
Data Release Frequency: Annually

PA MANIFEST: Manifest Information
Hazardous waste manifest information.

Date of Government Version: 12/31/2014
Date Data Arrived at EDR: 07/24/2015
Date Made Active in Reports: 08/18/2015
Number of Days to Update: 25

Source: Department of Environmental Protection
Telephone: 717-783-8990
Last EDR Contact: 04/18/2016
Next Scheduled EDR Contact: 08/01/2016
Data Release Frequency: Annually

RI MANIFEST: Manifest information
Hazardous waste manifest information

Date of Government Version: 12/31/2013
Date Data Arrived at EDR: 06/19/2015
Date Made Active in Reports: 07/15/2015
Number of Days to Update: 26

Source: Department of Environmental Management
Telephone: 401-222-2797
Last EDR Contact: 06/06/2016
Next Scheduled EDR Contact: 09/05/2016
Data Release Frequency: Annually

WI MANIFEST: Manifest Information
Hazardous waste manifest information.

Date of Government Version: 12/31/2015
Date Data Arrived at EDR: 04/14/2016
Date Made Active in Reports: 06/03/2016
Number of Days to Update: 50

Source: Department of Natural Resources
Telephone: N/A
Last EDR Contact: 06/13/2016
Next Scheduled EDR Contact: 09/26/2016
Data Release Frequency: Annually

Oil/Gas Pipelines
Source: PennWell Corporation
Petroleum Bundle (Crude Oil, Refined Products, Petrochemicals, Gas Liquids (LPG/NGL), and Specialty Gases (Miscellaneous)) N = Natural Gas Bundle (Natural Gas, Gas Liquids (LPG/NGL), and Specialty Gases (Miscellaneous)). This map includes information copyrighted by PennWell Corporation. This information is provided on a best effort basis and PennWell Corporation does not guarantee its accuracy nor warrant its fitness for any particular purpose. Such information has been reprinted with the permission of PennWell.

Electric Power Transmission Line Data
Source: PennWell Corporation
This map includes information copyrighted by PennWell Corporation. This information is provided on a best effort basis and PennWell Corporation does not guarantee its accuracy nor warrant its fitness for any particular purpose. Such information has been reprinted with the permission of PennWell.

Sensitive Receptors: There are individuals deemed sensitive receptors due to their fragile immune systems and special sensitivity to environmental discharges. These sensitive receptors typically include the elderly, the sick, and children. While the location of all sensitive receptors cannot be determined, EDR indicates those buildings and facilities - schools, daycares, hospitals, medical centers, and nursing homes - where individuals who are sensitive receptors are likely to be located.

AHA Hospitals:
Source: American Hospital Association, Inc.
Telephone: 312-280-5991
The database includes a listing of hospitals based on the American Hospital Association's annual survey of hospitals.

Medical Centers: Provider of Services Listing
Source: Centers for Medicare & Medicaid Services
Telephone: 410-786-3000
A listing of hospitals with Medicare provider number, produced by Centers of Medicare & Medicaid Services, a federal agency within the U.S. Department of Health and Human Services.

Nursing Homes
Source: National Institutes of Health
Telephone: 301-594-6248
Information on Medicare and Medicaid certified nursing homes in the United States.

Public Schools
Source: National Center for Education Statistics
Telephone: 202-502-7300
The National Center for Education Statistics' primary database on elementary and secondary public education in the United States. It is a comprehensive, annual, national statistical database of all public elementary and secondary schools and school districts, which contains data that are comparable across all states.

Private Schools
Source: National Center for Education Statistics
Telephone: 202-502-7300
The National Center for Education Statistics' primary database on private school locations in the United States.
Daycare Centers: Licensed Facilities
Source: Department of Social Services
Telephone: 916-657-4041

Flood Zone Data: This data, available in select counties across the country, was obtained by EDR in 2003 & 2011 from the Federal Emergency Management Agency (FEMA). Data depicts 100-year and 500-year flood zones as defined by FEMA.

NWI: National Wetlands Inventory. This data, available in select counties across the country, was obtained by EDR in 2002, 2005 and 2010 from the U.S. Fish and Wildlife Service.

State Wetlands Data: Wetland Inventory
Source: Department of Fish & Game
Telephone: 916-445-0411

Current USGS 7.5 Minute Topographic Map
Source: U.S. Geological Survey

**STREET AND ADDRESS INFORMATION**

© 2015 TomTom North America, Inc. All rights reserved. This material is proprietary and the subject of copyright protection and other intellectual property rights owned by or licensed to Tele Atlas North America, Inc. The use of this material is subject to the terms of a license agreement. You will be held liable for any unauthorized copying or disclosure of this material.

# GEOCHECK ®- PHYSICAL SETTING SOURCE ADDENDUM

**TARGET PROPERTY ADDRESS**

800 AIR WAY
800 AIR WAY
GLENDALE, CA 91201

**TARGET PROPERTY COORDINATES**

| | |
|---|---|
| Latitude (North): | 34.155536 - 34˚ 9' 19.93'' |
| Longitude (West): | 118.278093 - 118˚ 16' 41.13'' |
| Universal Tranverse Mercator: | Zone 11 |
| UTM X (Meters): | 382180.1 |
| UTM Y (Meters): | 3779944.8 |
| Elevation: | 468 ft. above sea level |

**USGS TOPOGRAPHIC MAP**

| | |
|---|---|
| Target Property Map: | 5630791 BURBANK, CA |
| Version Date: | 2012 |

EDR's GeoCheck Physical Setting Source Addendum is provided to assist the environmental professional in forming an opinion about the impact of potential contaminant migration.

Assessment of the impact of contaminant migration generally has two principal investigative components:

1. Groundwater flow direction, and
2. Groundwater flow velocity.

Groundwater flow direction may be impacted by surface topography, hydrology, hydrogeology, characteristics of the soil, and nearby wells. Groundwater flow velocity is generally impacted by the nature of the geologic strata.

# GEOCHECK® - PHYSICAL SETTING SOURCE SUMMARY

**GROUNDWATER FLOW DIRECTION INFORMATION**

Groundwater flow direction for a particular site is best determined by a qualified environmental professional using site-specific well data. If such data is not reasonably ascertainable, it may be necessary to rely on other sources of information, such as surface topographic information, hydrologic information, hydrogeologic data collected on nearby properties, and regional groundwater flow information (from deep aquifers).

**TOPOGRAPHIC INFORMATION**

Surface topography may be indicative of the direction of surficial groundwater flow. This information can be used to assist the environmental professional in forming an opinion about the impact of nearby contaminated properties or, should contamination exist on the target property, what downgradient sites might be impacted.

**TARGET PROPERTY TOPOGRAPHY**

General Topographic Gradient: General SW

**SURROUNDING TOPOGRAPHY: ELEVATION PROFILES**

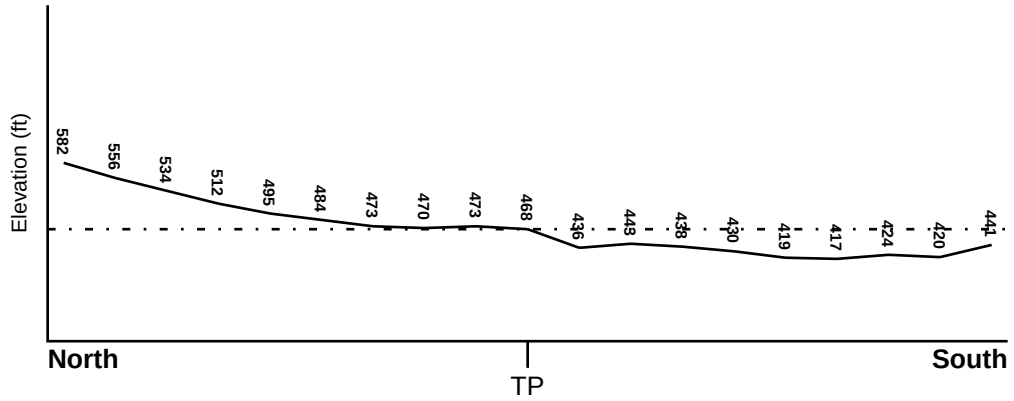


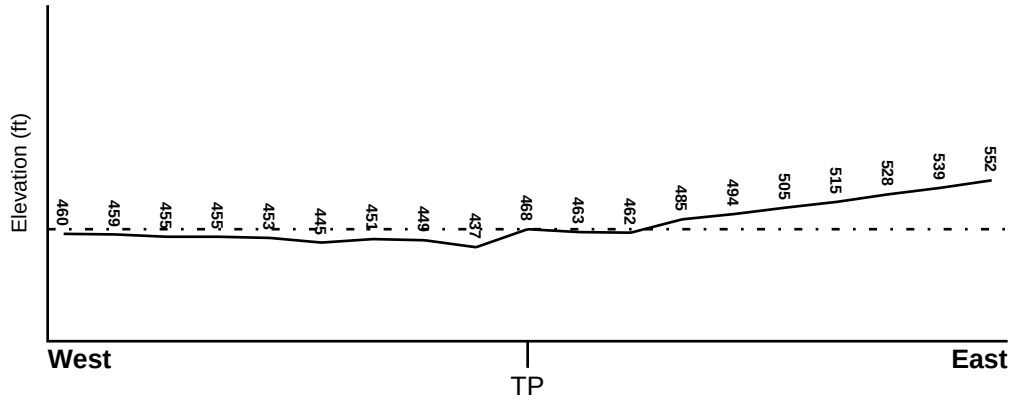


**Target Property Elevation: 468 ft.**

0 1/2 1 Miles

Source: Topography has been determined from the USGS 7.5' Digital Elevation Model and should be evaluated on a relative (not an absolute) basis. Relative elevation information between sites of close proximity should be field verified.

# GEOCHECK® - PHYSICAL SETTING SOURCE SUMMARY

**HYDROLOGIC INFORMATION**

Surface water can act as a hydrologic barrier to groundwater flow. Such hydrologic information can be used to assist the environmental professional in forming an opinion about the impact of nearby contaminated properties or, should contamination exist on the target property, what downgradient sites might be impacted.

Refer to the Physical Setting Source Map following this summary for hydrologic information (major waterways and bodies of water).

**FEMA FLOOD ZONE**

| Target Property County | FEMA Flood Electronic Data |
|---|---|
| LOS ANGELES, CA | YES - refer to the Overview Map and Detail Map |

Flood Plain Panel at Target Property: 06037C - FEMA DFIRM Flood data

Additional Panels in search area: Not Reported

**NATIONAL WETLAND INVENTORY**

| NWI Quad at Target Property | NWI Electronic Data Coverage |
|---|---|
| BURBANK | YES - refer to the Overview Map and Detail Map |

**HYDROGEOLOGIC INFORMATION**

Hydrogeologic information obtained by installation of wells on a specific site can often be an indicator of groundwater flow direction in the immediate area. Such hydrogeologic information can be used to assist the environmental professional in forming an opinion about the impact of nearby contaminated properties or, should contamination exist on the target property, what downgradient sites might be impacted.

***Site-Specific Hydrogeological Data*:***

Search Radius: 1.25 miles
Status: Not found

**AQUIFLOW®**

Search Radius: 1.000 Mile.

EDR has developed the AQUIFLOW Information System to provide data on the general direction of groundwater flow at specific points. EDR has reviewed reports submitted by environmental professionals to regulatory authorities at select sites and has extracted the date of the report, groundwater flow direction as determined hydrogeologically, and the depth to water table.

| MAP ID | LOCATION FROM TP | GENERAL DIRECTION GROUNDWATER FLOW |
|---|---|---|
| Not Reported | | |

* ©1996 Site−specific hydrogeological data gathered by CERCLIS Alerts, Inc., Bainbridge Island, WA. All rights reserved. All of the information and opinions presented are those of the cited EPA report(s), which were completed under a Comprehensive Environmental Response Compensation and Liability Information System (CERCLIS) investigation.

# GEOCHECK® - PHYSICAL SETTING SOURCE SUMMARY

**GROUNDWATER FLOW VELOCITY INFORMATION**

Groundwater flow velocity information for a particular site is best determined by a qualified environmental professional using site specific geologic and soil strata data. If such data are not reasonably ascertainable, it may be necessary to rely on other sources of information, including geologic age identification, rock stratigraphic unit and soil characteristics data collected on nearby properties and regional soil information. In general, contaminant plumes move more quickly through sandy-gravelly types of soils than silty-clayey types of soils.

**GEOLOGIC INFORMATION IN GENERAL AREA OF TARGET PROPERTY**

Geologic information can be used by the environmental professional in forming an opinion about the relative speed at which contaminant migration may be occurring.

**ROCK STRATIGRAPHIC UNIT**

| | |
|---|---|
| Era: | Cenozoic |
| System: | Quaternary |
| Series: | Quaternary |
| Code: | Q *(decoded above as Era, System & Series)* |

**GEOLOGIC AGE IDENTIFICATION**

Category: Stratifed Sequence

Geologic Age and Rock Stratigraphic Unit Source: P.G. Schruben, R.E. Arndt and W.J. Bawiec, Geology of the Conterminous U.S. at 1:2,500,000 Scale - a digital representation of the 1974 P.B. King and H.M. Beikman Map, USGS Digital Data Series DDS - 11 (1994).

**DOMINANT SOIL COMPOSITION IN GENERAL AREA OF TARGET PROPERTY**

The U.S. Department of Agriculture's (USDA) Soil Conservation Service (SCS) leads the National Cooperative Soil Survey (NCSS) and is responsible for collecting, storing, maintaining and distributing soil survey information for privately owned lands in the United States. A soil map in a soil survey is a representation of soil patterns in a landscape. Soil maps for STATSGO are compiled by generalizing more detailed (SSURGO) soil survey maps. The following information is based on Soil Conservation Service STATSGO data.

| | |
|---|---|
| Soil Component Name: | URBAN LAND |
| Soil Surface Texture: | variable |
| Hydrologic Group: | Not reported |
| Soil Drainage Class: | Not reported |

Hydric Status: Soil does not meet the requirements for a hydric soil.

| | |
|---|---|
| Corrosion Potential - Uncoated Steel: | Not Reported |
| Depth to Bedrock Min: | > 10 inches |
| Depth to Bedrock Max: | > 10 inches |

# GEOCHECK® - PHYSICAL SETTING SOURCE SUMMARY

| Soil Layer Information | | | | | | | |
|---|---|---|---|---|---|---|---|
| | Boundary | | | Classification | | | |
| Layer | Upper | Lower | Soil Texture Class | AASHTO Group | Unified Soil | Permeability Rate (in/hr) | Soil Reaction (pH) |
| 1 | 0 inches | 6 inches | variable | Not reported | Not reported | Max: 0.00<br>Min: 0.00 | Max: 0.00<br>Min: 0.00 |

**OTHER SOIL TYPES IN AREA**

Based on Soil Conservation Service STATSGO data, the following additional subordinant soil types may appear within the general area of target property.

Soil Surface Textures: loam
clay
silt loam
loamy sand
sandy loam
fine sand
clay loam
gravelly - sandy loam
coarse sand
gravelly - sand
sand

Surficial Soil Types: loam
clay
silt loam
loamy sand
sandy loam
fine sand
clay loam
gravelly - sandy loam
coarse sand
gravelly - sand
sand

Shallow Soil Types: fine sandy loam
gravelly - loam
sand
silty clay

Deeper Soil Types: stratified
clay loam
silty clay loam
gravelly - sandy loam
coarse sand
sand
weathered bedrock
very fine sandy loam

# GEOCHECK® - PHYSICAL SETTING SOURCE SUMMARY

## LOCAL / REGIONAL WATER AGENCY RECORDS

EDR Local/Regional Water Agency records provide water well information to assist the environmental professional in assessing sources that may impact ground water flow direction, and in forming an opinion about the impact of contaminant migration on nearby drinking water wells.

## WELL SEARCH DISTANCE INFORMATION

| DATABASE | SEARCH DISTANCE (miles) |
|---|---|
| Federal USGS | 1.000 |
| Federal FRDS PWS | Nearest PWS within 0.001 miles |
| State Database | 1.000 |

## FEDERAL USGS WELL INFORMATION

| MAP ID | WELL ID | LOCATION FROM TP |
|---|---|---|
| A2 | USGS40000142182 | 1/4 - 1/2 Mile West |
| 3 | USGS40000142255 | 1/4 - 1/2 Mile NNW |
| 6 | USGS40000142852 | 1/2 - 1 Mile NW |
| 7 | USGS40000142024 | 1/2 - 1 Mile SE |
| 22 | USGS40000142251 | 1/2 - 1 Mile WNW |
| 23 | USGS40000142270 | 1/2 - 1 Mile NW |

## FEDERAL FRDS PUBLIC WATER SUPPLY SYSTEM INFORMATION

| MAP ID | WELL ID | LOCATION FROM TP |
|---|---|---|
| No PWS System Found | | |

Note: PWS System location is not always the same as well location.

## STATE DATABASE WELL INFORMATION

| MAP ID | WELL ID | LOCATION FROM TP |
|---|---|---|
| A1 | CADW60000005581 | 1/4 - 1/2 Mile West |
| B4 | 518 | 1/2 - 1 Mile SW |
| B5 | 519 | 1/2 - 1 Mile SW |
| C8 | 513 | 1/2 - 1 Mile NNW |
| C9 | 514 | 1/2 - 1 Mile NNW |
| C10 | 511 | 1/2 - 1 Mile NNW |
| C11 | 512 | 1/2 - 1 Mile NNW |
| C12 | 517 | 1/2 - 1 Mile NNW |
| C13 | 590 | 1/2 - 1 Mile NNW |
| C14 | 515 | 1/2 - 1 Mile NNW |
| C15 | 516 | 1/2 - 1 Mile NNW |
| C16 | 510 | 1/2 - 1 Mile NNW |
| C17 | 22747 | 1/2 - 1 Mile NNW |
| C18 | 22745 | 1/2 - 1 Mile NNW |
| C19 | 507 | 1/2 - 1 Mile NNW |

# GEOCHECK® - PHYSICAL SETTING SOURCE SUMMARY

**STATE DATABASE WELL INFORMATION**

| MAP ID | WELL ID | LOCATION FROM TP |
|---|---|---|
| C20 | 509 | 1/2 - 1 Mile NNW |
| C21 | 508 | 1/2 - 1 Mile NNW |

# PHYSICAL SETTING SOURCE MAP - 4655459.2s

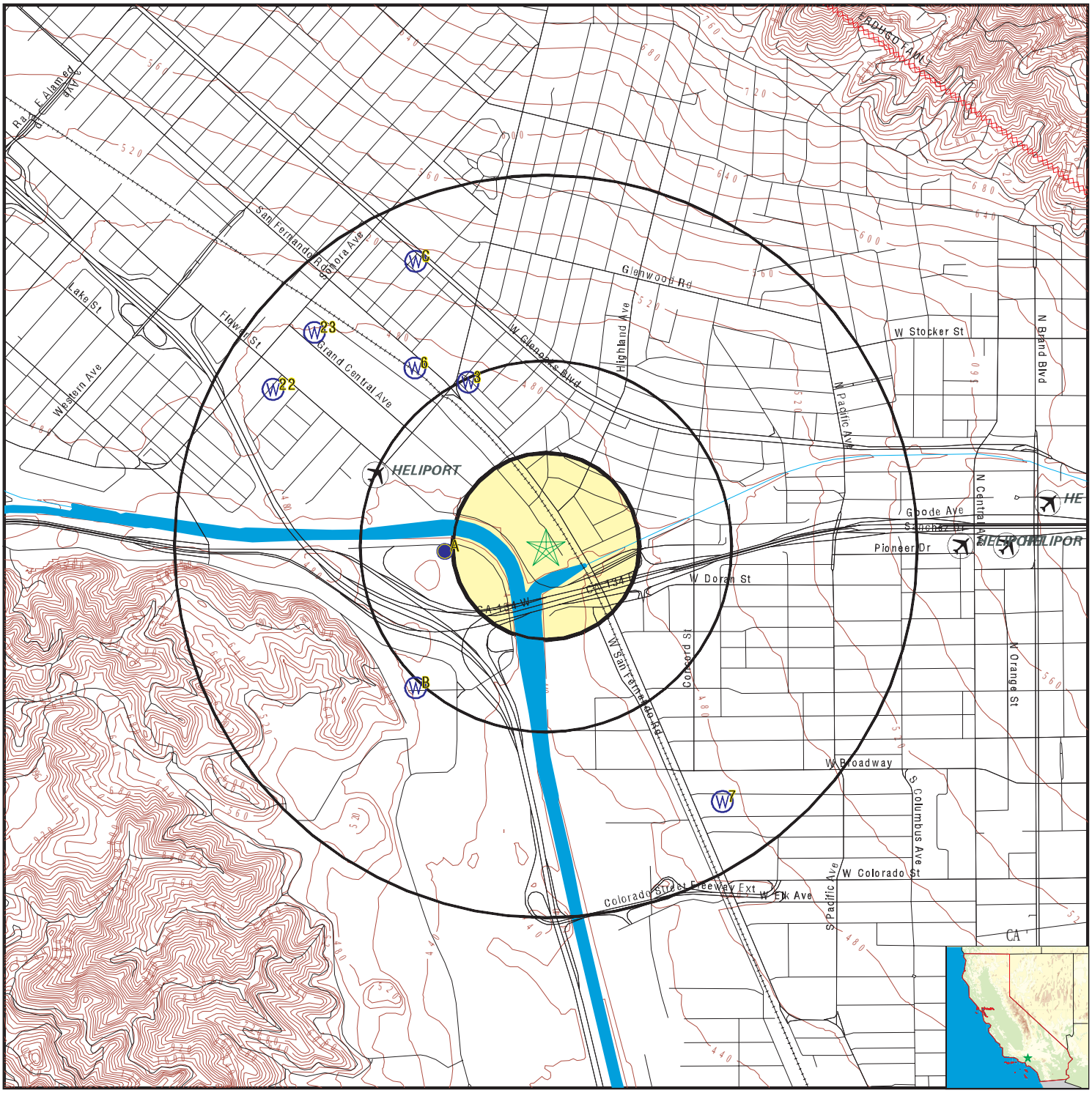


County Boundary
Major Roads
Contour Lines
Earthquake Fault Lines
Airports
Earthquake epicenter, Richter 5 or greater
Water Wells
Public Water Supply Wells
Cluster of Multiple Icons

0 1/4 1/2 1 Miles

Groundwater Flow Direction
GI Indeterminate Groundwater Flow at Location
GV Groundwater Flow Varies at Location
HD Closest Hydrogeological Data
Oil, gas or related wells

N

| | |
|---|---|
| SITE NAME: 800 Air Way | CLIENT: Stantec |
| ADDRESS: 800 Air Way<br>Glendale CA 91201 | CONTACT: Anuya Sawant |
| LAT/LONG: 34.155536 / 118.278093 | INQUIRY #: 4655459.2s |
| | DATE: June 23, 2016 2:13 pm |

Copyright © 2016 EDR, Inc. © 2015 TomTom Rel. 2015.

| Map ID<br>Direction<br>Distance<br>Elevation | Database | EDR ID Number |
|---|---|---|
| **A1**<br>**West**<br>**1/4 - 1/2 Mile**<br>**Lower** | **CA WELLS** | **CADW60000005581** |

| | |
|---|---|
| Objectid: | 5581 |
| Latitude: | 34.155683 |
| Longitude: | -118.282553 |
| Site code: | 341557N1182826W001 |
| State well numbe: | 01N13W19G001S |
| Local well name: | '3914H' |
| Well use id: | 1 |
| Well use descrip: | Observation |
| County id: | 19 |
| County name: | Los Angeles |
| Basin code: | '4-12' |
| Basin desc: | San Fernando Valley |
| Dwr region id: | 80238 |
| Dwr region: | Southern Region Office |
| Site id: | CADW60000005581 |

---

| | | | |
|---|---|---|---|
| **A2**<br>**West**<br>**1/4 - 1/2 Mile**<br>**Lower** | **FED USGS** | **USGS40000142182** | |

| | | | |
|---|---|---|---|
| Org. Identifier: | USGS-CA | | |
| Formal name: | USGS California Water Science Center | | |
| Monloc Identifier: | USGS-340918118165601 | | |
| Monloc name: | 001N013W19F003S | | |
| Monloc type: | Well | | |
| Monloc desc: | Not Reported | | |
| Huc code: | 18070105 | Drainagearea value: | Not Reported |
| Drainagearea Units: | Not Reported | Contrib drainagearea: | Not Reported |
| Contrib drainagearea units: | Not Reported | Latitude: | 34.1550071 |
| Longitude: | -118.2831315 | Sourcemap scale: | 24000 |
| Horiz Acc measure: | 1 | Horiz Acc measure units: | seconds |
| Horiz Collection method: | Interpolated from map | | |
| Horiz coord refsys: | NAD83 | Vert measure val: | Not Reported |
| Vert measure units: | Not Reported | Vertacc measure val: | Not Reported |
| Vert accmeasure units: | Not Reported | | |
| Vertcollection method: | Not Reported | | |
| Vert coord refsys: | Not Reported | Countrycode: | US |
| Aquifername: | Other aquifers | | |
| Formation type: | Not Reported | | |
| Aquifer type: | Not Reported | | |
| Construction date: | Not Reported | Welldepth: | 586 |
| Welldepth units: | ft | Wellholedepth: | Not Reported |
| Wellholedepth units: | Not Reported | | |

Ground-water levels, Number of Measurements: 0

---

| | | |
|---|---|---|
| **3**<br>**NNW**<br>**1/4 - 1/2 Mile**<br>**Higher** | **FED USGS** | **USGS40000142255** |

| | | | |
|---|---|---|---|
| Org. Identifier: | USGS-CA | | |
| Formal name: | USGS California Water Science Center | | |
| Monloc Identifier: | USGS-340943118165101 | | |
| Monloc name: | 001N013W19B001S | | |
| Monloc type: | Well | | |
| Monloc desc: | Not Reported | | |
| Huc code: | 18070105 | Drainagearea value: | Not Reported |
| Drainagearea Units: | Not Reported | Contrib drainagearea: | Not Reported |
| Contrib drainagearea units: | Not Reported | Latitude: | 34.1619512 |
| Longitude: | -118.2817427 | Sourcemap scale: | 24000 |
| Horiz Acc measure: | 1 | Horiz Acc measure units: | seconds |
| Horiz Collection method: | Interpolated from map | | |
| Horiz coord refsys: | NAD83 | Vert measure val: | Not Reported |
| Vert measure units: | Not Reported | Vertacc measure val: | Not Reported |
| Vert accmeasure units: | Not Reported | | |
| Vertcollection method: | Not Reported | | |
| Vert coord refsys: | Not Reported | Countrycode: | US |
| Aquifername: | California Coastal Basin aquifers | | |
| Formation type: | Not Reported | | |
| Aquifer type: | Not Reported | | |
| Construction date: | Not Reported | Welldepth: | 480 |
| Welldepth units: | ft | Wellholedepth: | 500 |
| Wellholedepth units: | ft | | |

Ground-water levels, Number of Measurements: 0

---

**B4**
**SW** **CA WELLS** **518**
**1/2 - 1 Mile**
**Lower**

**Water System Information:**

| | | | |
|---|---|---|---|
| Prime Station Code: | 01N/13W-19K01 S | User ID: | MET |
| FRDS Number: | 1910067023 | County: | Los Angeles |
| District Number: | 15 | Station Type: | WELL/AMBNT/MUN/INTAKE/SUPPLY |
| Water Type: | Well/Groundwater | Well Status: | Inactive Raw |
| Source Lat/Long: | 340900.0 1181700.0 | Precision: | Undefined |
| Source Name: | CRYSTALL SPRINGS WELL 49 - INACTIVE | | |
| System Number: | 1910067 | | |
| System Name: | LOS ANGELES-CITY, DEPT. OF WATER & POWER | | |
| Organization That Operates System: | | | |
| | P.O. BOX 51111, ROOM 1420 | | |
| | LOS ANGELES, CA 90051 | | |
| Pop Served: | 3700000 | Connections: | 657422 |
| Area Served: | LOS ANGELES | | |

---

**B5**
**SW** **CA WELLS** **519**
**1/2 - 1 Mile**
**Lower**

**Water System Information:**

| | | | |
|---|---|---|---|
| Prime Station Code: | 01N/13W-19K02 S | User ID: | MET |
| FRDS Number: | 1910067024 | County: | Los Angeles |
| District Number: | 15 | Station Type: | WELL/AMBNT/MUN/INTAKE/SUPPLY |
| Water Type: | Well/Groundwater | Well Status: | Inactive Raw |
| Source Lat/Long: | 340900.0 1181700.0 | Precision: | Undefined |
| Source Name: | CRYSTALL SPRINGS WELL 50 - INACTIVE | | |

System Number: 1910067
System Name: LOS ANGELES-CITY, DEPT. OF WATER & POWER
Organization That Operates System:
P.O. BOX 51111, ROOM 1420
LOS ANGELES, CA 90051
Pop Served: 3700000 Connections: 657422
Area Served: LOS ANGELES

---

**6**
**NW** **FED USGS** **USGS40000142852**
**1/2 - 1 Mile**
**Higher**

| | | | |
|---|---|---|---|
| Org. Identifier: | USGS-CA | | |
| Formal name: | USGS California Water Science Center | | |
| Monloc Identifier: | USGS-341760118094501 | | |
| Monloc name: | 001N013W19C001S | | |
| Monloc type: | Well | | |
| Monloc desc: | Not Reported | | |
| Huc code: | 18070105 | Drainagearea value: | Not Reported |
| Drainagearea Units: | Not Reported | Contrib drainagearea: | Not Reported |
| Contrib drainagearea units: | Not Reported | Latitude: | 34.1625068 |
| Longitude: | -118.2842428 | Sourcemap scale: | 24000 |
| Horiz Acc measure: | 1 | Horiz Acc measure units: | seconds |
| Horiz Collection method: | Interpolated from map | | |
| Horiz coord refsys: | NAD83 | Vert measure val: | Not Reported |
| Vert measure units: | Not Reported | Vertacc measure val: | Not Reported |
| Vert accmeasure units: | Not Reported | | |
| Vertcollection method: | Not Reported | | |
| Vert coord refsys: | Not Reported | Countrycode: | US |
| Aquifername: | California Coastal Basin aquifers | | |
| Formation type: | Not Reported | | |
| Aquifer type: | Not Reported | | |
| Construction date: | Not Reported | Welldepth: | 460 |
| Welldepth units: | ft | Wellholedepth: | 500 |
| Wellholedepth units: | ft | | |

Ground-water levels, Number of Measurements: 0

---

**7**
**SE** **FED USGS** **USGS40000142024**
**1/2 - 1 Mile**
**Higher**

| | | | |
|---|---|---|---|
| Org. Identifier: | USGS-CA | | |
| Formal name: | USGS California Water Science Center | | |
| Monloc Identifier: | USGS-340844118160801 | | |
| Monloc name: | 001N013W19B007S | | |
| Monloc type: | Well | | |
| Monloc desc: | Not Reported | | |
| Huc code: | 18070105 | Drainagearea value: | Not Reported |
| Drainagearea Units: | Not Reported | Contrib drainagearea: | Not Reported |
| Contrib drainagearea units: | Not Reported | Latitude: | 34.1455632 |
| Longitude: | -118.2697977 | Sourcemap scale: | 24000 |

| | | | |
|---|---|---|---|
| Horiz Acc measure: | 1 | Horiz Acc measure units: | seconds |
| Horiz Collection method: | Interpolated from map | | |
| Horiz coord refsys: | NAD83 | Vert measure val: | Not Reported |
| Vert measure units: | Not Reported | Vertacc measure val: | Not Reported |
| Vert accmeasure units: | Not Reported | | |
| Vertcollection method: | Not Reported | | |
| Vert coord refsys: | Not Reported | Countrycode: | US |
| Aquifername: | California Coastal Basin aquifers | | |
| Formation type: | Not Reported | | |
| Aquifer type: | Not Reported | | |
| Construction date: | Not Reported | Welldepth: | 462 |
| Welldepth units: | ft | Wellholedepth: | 500 |
| Wellholedepth units: | ft | | |

Ground-water levels, Number of Measurements: 0

---

**C8**
**NNW** **CA WELLS 513**
**1/2 - 1 Mile**
**Higher**

**Water System Information:**

| | | | |
|---|---|---|---|
| Prime Station Code: | 01N/13W-19E01 S | User ID: | MET |
| FRDS Number: | 1910043008 | County: | Los Angeles |
| District Number: | 15 | Station Type: | WELL/AMBNT/MUN/INTAKE/SUPPLY |
| Water Type: | Well/Groundwater | Well Status: | Inactive Raw |
| Source Lat/Long: | 341000.0 1181700.0 | Precision: | Undefined |
| Source Name: | GRAND VIEW WELL 12 - INACTIVE | | |
| System Number: | 1910043 | | |
| System Name: | GLENDALE-CITY, WATER DEPT. | | |
| Organization That Operates System: | | | |
| | 141 NO. GLENDALE AVE. LEVEL 4<br>GLENDALE, CA 91206 | | |
| Pop Served: | 184000 | Connections: | 32013 |
| Area Served: | GLENDALE | | |

---

**C9**
**NNW** **CA WELLS 514**
**1/2 - 1 Mile**
**Higher**

**Water System Information:**

| | | | |
|---|---|---|---|
| Prime Station Code: | 01N/13W-19F01 S | User ID: | MET |
| FRDS Number: | 1910067019 | County: | Los Angeles |
| District Number: | 15 | Station Type: | WELL/AMBNT/MUN/INTAKE/SUPPLY |
| Water Type: | Well/Groundwater | Well Status: | Inactive Raw |
| Source Lat/Long: | 341000.0 1181700.0 | Precision: | Undefined |
| Source Name: | CRYSTALL SPRINGS WELL 44 - INACTIVE | | |
| System Number: | 1910067 | | |
| System Name: | LOS ANGELES-CITY, DEPT. OF WATER & POWER | | |
| Organization That Operates System: | | | |
| | P.O. BOX 51111, ROOM 1420<br>LOS ANGELES, CA 90051 | | |
| Pop Served: | 3700000 | Connections: | 657422 |
| Area Served: | LOS ANGELES | | |

| Map ID<br>Direction<br>Distance<br>Elevation | Database | EDR ID Number |
|---|---|---|
| **C10**<br>**NNW**<br>**1/2 - 1 Mile**<br>**Higher** | **CA WELLS** | **511** |

**Water System Information:**

| | | | |
|---|---|---|---|
| Prime Station Code: | 01N/13W-19C04 S | User ID: | MET |
| FRDS Number: | 1910043006 | County: | Los Angeles |
| District Number: | 15 | Station Type: | WELL/AMBNT/MUN/INTAKE/SUPPLY |
| Water Type: | Well/Groundwater | Well Status: | Inactive Raw |
| Source Lat/Long: | 341000.0 1181700.0 | Precision: | Undefined |
| Source Name: | GRAND VIEW WELL 06 - INACTIVE | | |
| System Number: | 1910043 | | |
| System Name: | GLENDALE-CITY, WATER DEPT. | | |
| Organization That Operates System: | | | |
| | 141 NO. GLENDALE AVE. LEVEL 4<br>GLENDALE, CA 91206 | | |
| Pop Served: | 184000 | Connections: | 32013 |
| Area Served: | GLENDALE | | |

---

| | | |
|---|---|---|
| **C11**<br>**NNW**<br>**1/2 - 1 Mile**<br>**Higher** | **CA WELLS** | **512** |

**Water System Information:**

| | | | |
|---|---|---|---|
| Prime Station Code: | 01N/13W-19D03 S | User ID: | MET |
| FRDS Number: | 1910043009 | County: | Los Angeles |
| District Number: | 15 | Station Type: | WELL/AMBNT/MUN/INTAKE/SUPPLY |
| Water Type: | Well/Groundwater | Well Status: | Inactive Raw |
| Source Lat/Long: | 341000.0 1181700.0 | Precision: | Undefined |
| Source Name: | GRAND VIEW WELL 13 - INACTIVE | | |
| System Number: | 1910043 | | |
| System Name: | GLENDALE-CITY, WATER DEPT. | | |
| Organization That Operates System: | | | |
| | 141 NO. GLENDALE AVE. LEVEL 4<br>GLENDALE, CA 91206 | | |
| Pop Served: | 184000 | Connections: | 32013 |
| Area Served: | GLENDALE | | |

---

| | | |
|---|---|---|
| **C12**<br>**NNW**<br>**1/2 - 1 Mile**<br>**Higher** | **CA WELLS** | **517** |

**Water System Information:**

| | | | |
|---|---|---|---|
| Prime Station Code: | 01N/13W-19F04 S | User ID: | MET |
| FRDS Number: | 1910067022 | County: | Los Angeles |
| District Number: | 15 | Station Type: | WELL/AMBNT/MUN/INTAKE/SUPPLY |
| Water Type: | Well/Groundwater | Well Status: | Inactive Raw |
| Source Lat/Long: | 341000.0 1181700.0 | Precision: | Undefined |
| Source Name: | CRYSTALL SPRINGS WELL 47 - INACTIVE | | |

System Number: 1910067
System Name: LOS ANGELES-CITY, DEPT. OF WATER & POWER
Organization That Operates System:
P.O. BOX 51111, ROOM 1420
LOS ANGELES, CA 90051
Pop Served: 3700000 Connections: 657422
Area Served: LOS ANGELES

---

**C13**
**NNW** **CA WELLS** **590**
**1/2 - 1 Mile**
**Higher**

**Water System Information:**

| | | | |
|---|---|---|---|
| Prime Station Code: | 01N/14W-13R01 S | User ID: | MET |
| FRDS Number: | 1910043007 | County: | Los Angeles |
| District Number: | 15 | Station Type: | WELL/AMBNT/MUN/INTAKE/SUPPLY |
| Water Type: | Well/Groundwater | Well Status: | Inactive Raw |
| Source Lat/Long: | 341000.0 1181700.0 | Precision: | Undefined |

Source Name: GRAND VIEW WELL 11 - INACTIVE
System Number: 1910043
System Name: GLENDALE-CITY, WATER DEPT.
Organization That Operates System:
141 NO. GLENDALE AVE. LEVEL 4
GLENDALE, CA 91206
Pop Served: 184000 Connections: 32013
Area Served: GLENDALE

---

**C14**
**NNW** **CA WELLS** **515**
**1/2 - 1 Mile**
**Higher**

**Water System Information:**

| | | | |
|---|---|---|---|
| Prime Station Code: | 01N/13W-19F02 S | User ID: | MET |
| FRDS Number: | 1910067020 | County: | Los Angeles |
| District Number: | 15 | Station Type: | WELL/AMBNT/MUN/INTAKE/SUPPLY |
| Water Type: | Well/Groundwater | Well Status: | Inactive Raw |
| Source Lat/Long: | 341000.0 1181700.0 | Precision: | Undefined |

Source Name: CRYSTALL SPRINGS WELL 45 - INACTIVE
System Number: 1910067
System Name: LOS ANGELES-CITY, DEPT. OF WATER & POWER
Organization That Operates System:
P.O. BOX 51111, ROOM 1420
LOS ANGELES, CA 90051
Pop Served: 3700000 Connections: 657422
Area Served: LOS ANGELES

---

**C15**
**NNW** **CA WELLS** **516**
**1/2 - 1 Mile**
**Higher**

**Water System Information:**

| | | | |
|---|---|---|---|
| Prime Station Code: | 01N/13W-19F03 S | User ID: | MET |
| FRDS Number: | 1910067021 | County: | Los Angeles |
| District Number: | 15 | Station Type: | WELL/AMBNT/MUN/INTAKE/SUPPLY |
| Water Type: | Well/Groundwater | Well Status: | Inactive Raw |
| Source Lat/Long: | 341000.0 1181700.0 | Precision: | Undefined |

Source Name: CRYSTALL SPRINGS WELL 46 - INACTIVE

System Number: 1910067
System Name: LOS ANGELES-CITY, DEPT. OF WATER & POWER
Organization That Operates System:
P.O. BOX 51111, ROOM 1420
LOS ANGELES, CA 90051
Pop Served: 3700000 Connections: 657422
Area Served: LOS ANGELES

---

**C16**
**NNW** **CA WELLS** **510**
**1/2 - 1 Mile**
**Higher**

**Water System Information:**

| | | | |
|---|---|---|---|
| Prime Station Code: | 01N/13W-19C01 S | User ID: | MET |
| FRDS Number: | 1910043005 | County: | Los Angeles |
| District Number: | 15 | Station Type: | WELL/AMBNT/MUN/INTAKE/SUPPLY |
| Water Type: | Well/Groundwater | Well Status: | Inactive Raw |
| Source Lat/Long: | 341000.0 1181700.0 | Precision: | Undefined |

Source Name: GRAND VIEW WELL 02 - INACTIVE
System Number: 1910043
System Name: GLENDALE-CITY, WATER DEPT.
Organization That Operates System:
141 NO. GLENDALE AVE. LEVEL 4
GLENDALE, CA 91206
Pop Served: 184000 Connections: 32013
Area Served: GLENDALE

---

**C17**
**NNW** **CA WELLS** **22747**
**1/2 - 1 Mile**
**Higher**

**Water System Information:**

| | | | |
|---|---|---|---|
| Prime Station Code: | G19/043-NTBLWTR | User ID: | MET |
| FRDS Number: | 1910043017 | County: | Los Angeles |
| District Number: | 15 | Station Type: | CANAL/AMBNT/ |
| Water Type: | Well/Groundwater | Well Status: | Combined Treated |
| Source Lat/Long: | 341000.0 1181700.0 | Precision: | 1,000 Feet (10 Seconds) |

Source Name: MWD CONNECTION G1 - BLEND H20 FOR NO3
System Number: 1910043
System Name: GLENDALE-CITY, WATER DEPT.
Organization That Operates System:
141 NO. GLENDALE AVE. LEVEL 4
GLENDALE, CA 91206
Pop Served: 184000 Connections: 32013
Area Served: GLENDALE

---

**C18**
**NNW** **CA WELLS** **22745**
**1/2 - 1 Mile**
**Higher**

**Water System Information:**

| | | | |
|---|---|---|---|
| Prime Station Code: | G19/043-NTBLDIS | User ID: | MET |
| FRDS Number: | 1910043018 | County: | Los Angeles |
| District Number: | 15 | Station Type: | DIST/AMBNT/MUN |
| Water Type: | Well/Groundwater | Well Status: | Distribution System Sample Point Treated |
| Source Lat/Long: | 341000.0 1181700.0 | Precision: | 1,000 Feet (10 Seconds) |

Source Name: ROSSMOYNE/DRYDEN - NO3 BLEND - DIST SYS

# GEOCHECK® - PHYSICAL SETTING SOURCE MAP FINDINGS

System Number: 1910043
System Name: GLENDALE-CITY, WATER DEPT.
Organization That Operates System:
141 NO. GLENDALE AVE. LEVEL 4
GLENDALE, CA 91206

Pop Served: 184000 Connections: 32013
Area Served: GLENDALE

| | | | |
|---|---|---|---|
| Sample Collected: | 05-JAN-11 | Findings: | 7. MG/L |
| Chemical: | NITRATE (AS NO3) | | |
| Sample Collected: | 12-JAN-11 | Findings: | 17. MG/L |
| Chemical: | NITRATE (AS NO3) | | |
| Sample Collected: | 20-JAN-11 | Findings: | 14. MG/L |
| Chemical: | NITRATE (AS NO3) | | |
| Sample Collected: | 26-JAN-11 | Findings: | 9.7 MG/L |
| Chemical: | NITRATE (AS NO3) | | |
| Sample Collected: | 01-FEB-11 | Findings: | 15. MG/L |
| Chemical: | NITRATE (AS NO3) | | |
| Sample Collected: | 09-FEB-11 | Findings: | 10. MG/L |
| Chemical: | NITRATE (AS NO3) | | |
| Sample Collected: | 15-FEB-11 | Findings: | 3.8 MG/L |
| Chemical: | NITRATE (AS NO3) | | |
| Sample Collected: | 23-FEB-11 | Findings: | 17. MG/L |
| Chemical: | NITRATE (AS NO3) | | |
| Sample Collected: | 02-MAR-11 | Findings: | 15. MG/L |
| Chemical: | NITRATE (AS NO3) | | |
| Sample Collected: | 16-MAR-11 | Findings: | 12. MG/L |
| Chemical: | NITRATE (AS NO3) | | |
| Sample Collected: | 22-MAR-11 | Findings: | 9.8 MG/L |
| Chemical: | NITRATE (AS NO3) | | |
| Sample Collected: | 30-MAR-11 | Findings: | 3.5 MG/L |
| Chemical: | NITRATE (AS NO3) | | |
| Sample Collected: | 06-APR-11 | Findings: | 8.4 MG/L |
| Chemical: | NITRATE (AS NO3) | | |
| Sample Collected: | 13-APR-11 | Findings: | 2.1 MG/L |
| Chemical: | NITRATE (AS NO3) | | |
| Sample Collected: | 26-APR-11 | Findings: | 12. MG/L |
| Chemical: | NITRATE (AS NO3) | | |
| Sample Collected: | 04-MAY-11 | Findings: | 3.2 MG/L |
| Chemical: | NITRATE (AS NO3) | | |
| Sample Collected: | 18-MAY-11 | Findings: | 17. MG/L |
| Chemical: | NITRATE (AS NO3) | | |
| Sample Collected: | 25-MAY-11 | Findings: | 10. MG/L |
| Chemical: | NITRATE (AS NO3) | | |
| Sample Collected: | 08-JUN-11 | Findings: | 2.1 MG/L |
| Chemical: | NITRATE (AS NO3) | | |

| | | | |
|---|---|---|---|
| Sample Collected: | 15-JUN-11 | Findings: | 4.9 MG/L |
| Chemical: | NITRATE (AS NO3) | | |
| Sample Collected: | 22-JUN-11 | Findings: | 4.7 MG/L |
| Chemical: | NITRATE (AS NO3) | | |
| Sample Collected: | 06-JUL-11 | Findings: | 2.2 MG/L |
| Chemical: | NITRATE (AS NO3) | | |
| Sample Collected: | 13-JUL-11 | Findings: | 3.2 MG/L |
| Chemical: | NITRATE (AS NO3) | | |
| Sample Collected: | 20-JUL-11 | Findings: | 5.7 MG/L |
| Chemical: | NITRATE (AS NO3) | | |
| Sample Collected: | 03-AUG-11 | Findings: | 10. MG/L |
| Chemical: | NITRATE (AS NO3) | | |
| Sample Collected: | 10-AUG-11 | Findings: | 7.9 MG/L |
| Chemical: | NITRATE (AS NO3) | | |
| Sample Collected: | 17-AUG-11 | Findings: | 8.7 MG/L |
| Chemical: | NITRATE (AS NO3) | | |
| Sample Collected: | 24-AUG-11 | Findings: | 9.3 MG/L |
| Chemical: | NITRATE (AS NO3) | | |
| Sample Collected: | 31-AUG-11 | Findings: | 7.3 MG/L |
| Chemical: | NITRATE (AS NO3) | | |
| Sample Collected: | 07-SEP-11 | Findings: | 9.1 MG/L |
| Chemical: | NITRATE (AS NO3) | | |
| Sample Collected: | 14-SEP-11 | Findings: | 12. MG/L |
| Chemical: | NITRATE (AS NO3) | | |
| Sample Collected: | 21-SEP-11 | Findings: | 12. MG/L |
| Chemical: | NITRATE (AS NO3) | | |
| Sample Collected: | 28-SEP-11 | Findings: | 14. MG/L |
| Chemical: | NITRATE (AS NO3) | | |
| Sample Collected: | 05-OCT-11 | Findings: | 15. MG/L |
| Chemical: | NITRATE (AS NO3) | | |
| Sample Collected: | 12-OCT-11 | Findings: | 7. MG/L |
| Chemical: | NITRATE (AS NO3) | | |
| Sample Collected: | 19-OCT-11 | Findings: | 6.6 MG/L |
| Chemical: | NITRATE (AS NO3) | | |
| Sample Collected: | 02-NOV-11 | Findings: | 9.8 MG/L |
| Chemical: | NITRATE (AS NO3) | | |
| Sample Collected: | 09-NOV-11 | Findings: | 2.2 MG/L |
| Chemical: | NITRATE (AS NO3) | | |
| Sample Collected: | 16-NOV-11 | Findings: | 11. MG/L |
| Chemical: | NITRATE (AS NO3) | | |
| Sample Collected: | 30-NOV-11 | Findings: | 10. MG/L |
| Chemical: | NITRATE (AS NO3) | | |
| Sample Collected: | 07-DEC-11 | Findings: | 11. MG/L |
| Chemical: | NITRATE (AS NO3) | | |

| | | | |
|---|---|---|---|
| Sample Collected: | 21-DEC-11 | Findings: | 11. MG/L |
| Chemical: | NITRATE (AS NO3) | | |
| Sample Collected: | 28-DEC-11 | Findings: | 9.4 MG/L |
| Chemical: | NITRATE (AS NO3) | | |
| Sample Collected: | 05-JAN-12 | Findings: | 6. MG/L |
| Chemical: | NITRATE (AS NO3) | | |
| Sample Collected: | 11-JAN-12 | Findings: | 7.6 MG/L |
| Chemical: | NITRATE (AS NO3) | | |
| Sample Collected: | 19-JAN-12 | Findings: | 9.7 MG/L |
| Chemical: | NITRATE (AS NO3) | | |
| Sample Collected: | 19-JAN-12 | Findings: | 2200. UG/L |
| Chemical: | NITRATE + NITRITE (AS N) | | |
| Sample Collected: | 25-JAN-12 | Findings: | 9.2 MG/L |
| Chemical: | NITRATE (AS NO3) | | |
| Sample Collected: | 01-FEB-12 | Findings: | 8.8 MG/L |
| Chemical: | NITRATE (AS NO3) | | |
| Sample Collected: | 08-FEB-12 | Findings: | 8.5 MG/L |
| Chemical: | NITRATE (AS NO3) | | |
| Sample Collected: | 22-FEB-12 | Findings: | 2.9 MG/L |
| Chemical: | NITRATE (AS NO3) | | |
| Sample Collected: | 29-FEB-12 | Findings: | 8.3 MG/L |
| Chemical: | NITRATE (AS NO3) | | |
| Sample Collected: | 07-MAR-12 | Findings: | 13. MG/L |
| Chemical: | NITRATE (AS NO3) | | |
| Sample Collected: | 21-MAR-12 | Findings: | 8. MG/L |
| Chemical: | NITRATE (AS NO3) | | |
| Sample Collected: | 28-MAR-12 | Findings: | 12. MG/L |
| Chemical: | NITRATE (AS NO3) | | |
| Sample Collected: | 04-APR-12 | Findings: | 10. MG/L |
| Chemical: | NITRATE (AS NO3) | | |
| Sample Collected: | 10-APR-12 | Findings: | 8.6 MG/L |
| Chemical: | NITRATE (AS NO3) | | |
| Sample Collected: | 18-APR-12 | Findings: | 2.9 MG/L |
| Chemical: | NITRATE (AS NO3) | | |
| Sample Collected: | 25-APR-12 | Findings: | 16. MG/L |
| Chemical: | NITRATE (AS NO3) | | |
| Sample Collected: | 09-MAY-12 | Findings: | 2.9 MG/L |
| Chemical: | NITRATE (AS NO3) | | |
| Sample Collected: | 16-MAY-12 | Findings: | 3.2 MG/L |
| Chemical: | NITRATE (AS NO3) | | |
| Sample Collected: | 23-MAY-12 | Findings: | 7.1 MG/L |
| Chemical: | NITRATE (AS NO3) | | |
| Sample Collected: | 31-MAY-12 | Findings: | 13. MG/L |
| Chemical: | NITRATE (AS NO3) | | |

| | | | |
|---|---|---|---|
| Sample Collected: | 06-JUN-12 | Findings: | 2.3 MG/L |
| Chemical: | NITRATE (AS NO3) | | |
| Sample Collected: | 13-JUN-12 | Findings: | 6.3 MG/L |
| Chemical: | NITRATE (AS NO3) | | |
| Sample Collected: | 20-JUN-12 | Findings: | 7. MG/L |
| Chemical: | NITRATE (AS NO3) | | |
| Sample Collected: | 27-JUN-12 | Findings: | 6.2 MG/L |
| Chemical: | NITRATE (AS NO3) | | |
| Sample Collected: | 03-JUL-12 | Findings: | 2.1 MG/L |
| Chemical: | NITRATE (AS NO3) | | |
| Sample Collected: | 18-JUL-12 | Findings: | 2.7 MG/L |
| Chemical: | NITRATE (AS NO3) | | |
| Sample Collected: | 25-JUL-12 | Findings: | 9.5 MG/L |
| Chemical: | NITRATE (AS NO3) | | |
| Sample Collected: | 01-AUG-12 | Findings: | 10. MG/L |
| Chemical: | NITRATE (AS NO3) | | |
| Sample Collected: | 08-AUG-12 | Findings: | 2.3 MG/L |
| Chemical: | NITRATE (AS NO3) | | |
| Sample Collected: | 19-SEP-12 | Findings: | 11. MG/L |
| Chemical: | NITRATE (AS NO3) | | |
| Sample Collected: | 26-SEP-12 | Findings: | 11. MG/L |
| Chemical: | NITRATE (AS NO3) | | |
| Sample Collected: | 03-OCT-12 | Findings: | 2.4 MG/L |
| Chemical: | NITRATE (AS NO3) | | |
| Sample Collected: | 10-OCT-12 | Findings: | 2.9 MG/L |
| Chemical: | NITRATE (AS NO3) | | |
| Sample Collected: | 17-OCT-12 | Findings: | 10. MG/L |
| Chemical: | NITRATE (AS NO3) | | |
| Sample Collected: | 24-OCT-12 | Findings: | 13. MG/L |
| Chemical: | NITRATE (AS NO3) | | |
| Sample Collected: | 31-OCT-12 | Findings: | 2.2 MG/L |
| Chemical: | NITRATE (AS NO3) | | |
| Sample Collected: | 28-NOV-12 | Findings: | 14. MG/L |
| Chemical: | NITRATE (AS NO3) | | |
| Sample Collected: | 05-DEC-12 | Findings: | 2.5 MG/L |
| Chemical: | NITRATE (AS NO3) | | |
| Sample Collected: | 12-DEC-12 | Findings: | 5.9 MG/L |
| Chemical: | NITRATE (AS NO3) | | |
| Sample Collected: | 19-DEC-12 | Findings: | 2.8 MG/L |
| Chemical: | NITRATE (AS NO3) | | |
| Sample Collected: | 27-DEC-12 | Findings: | 9.1 MG/L |
| Chemical: | NITRATE (AS NO3) | | |
| Sample Collected: | 03-JAN-13 | Findings: | 10. MG/L |
| Chemical: | NITRATE (AS NO3) | | |

| | | | |
|---|---|---|---|
| Sample Collected: | 16-JAN-13 | Findings: | 11. MG/L |
| Chemical: | NITRATE (AS NO3) | | |
| Sample Collected: | 23-JAN-13 | Findings: | 10. MG/L |
| Chemical: | NITRATE (AS NO3) | | |
| Sample Collected: | 30-JAN-13 | Findings: | 13. MG/L |
| Chemical: | NITRATE (AS NO3) | | |
| Sample Collected: | 06-FEB-13 | Findings: | 11. MG/L |
| Chemical: | NITRATE (AS NO3) | | |
| Sample Collected: | 13-FEB-13 | Findings: | 6.3 MG/L |
| Chemical: | NITRATE (AS NO3) | | |
| Sample Collected: | 20-FEB-13 | Findings: | 6.6 MG/L |
| Chemical: | NITRATE (AS NO3) | | |
| Sample Collected: | 27-FEB-13 | Findings: | 10. MG/L |
| Chemical: | NITRATE (AS NO3) | | |
| Sample Collected: | 06-MAR-13 | Findings: | 14. MG/L |
| Chemical: | NITRATE (AS NO3) | | |
| Sample Collected: | 13-MAR-13 | Findings: | 11. MG/L |
| Chemical: | NITRATE (AS NO3) | | |
| Sample Collected: | 20-MAR-13 | Findings: | 9.9 MG/L |
| Chemical: | NITRATE (AS NO3) | | |
| Sample Collected: | 27-MAR-13 | Findings: | 9.8 MG/L |
| Chemical: | NITRATE (AS NO3) | | |
| Sample Collected: | 03-APR-13 | Findings: | 8.4 MG/L |
| Chemical: | NITRATE (AS NO3) | | |
| Sample Collected: | 10-APR-13 | Findings: | 7.2 MG/L |
| Chemical: | NITRATE (AS NO3) | | |
| Sample Collected: | 17-APR-13 | Findings: | 5.7 MG/L |
| Chemical: | NITRATE (AS NO3) | | |
| Sample Collected: | 24-APR-13 | Findings: | 2.1 MG/L |
| Chemical: | NITRATE (AS NO3) | | |
| Sample Collected: | 01-MAY-13 | Findings: | 7.6 MG/L |
| Chemical: | NITRATE (AS NO3) | | |
| Sample Collected: | 08-MAY-13 | Findings: | 13. MG/L |
| Chemical: | NITRATE (AS NO3) | | |
| Sample Collected: | 15-MAY-13 | Findings: | 14. MG/L |
| Chemical: | NITRATE (AS NO3) | | |
| Sample Collected: | 22-MAY-13 | Findings: | 11. MG/L |
| Chemical: | NITRATE (AS NO3) | | |
| Sample Collected: | 28-MAY-13 | Findings: | 8.4 MG/L |
| Chemical: | NITRATE (AS NO3) | | |
| Sample Collected: | 12-JUN-13 | Findings: | 2.2 MG/L |
| Chemical: | NITRATE (AS NO3) | | |
| Sample Collected: | 01-JUL-13 | Findings: | 7.7 MG/L |
| Chemical: | NITRATE (AS NO3) | | |

| | | | |
|---|---|---|---|
| Sample Collected: | 31-JUL-13 | Findings: | 7.4 MG/L |
| Chemical: | NITRATE (AS NO3) | | |
| Sample Collected: | 14-AUG-13 | Findings: | 7.4 MG/L |
| Chemical: | NITRATE (AS NO3) | | |
| Sample Collected: | 21-AUG-13 | Findings: | 6.7 MG/L |
| Chemical: | NITRATE (AS NO3) | | |
| Sample Collected: | 28-AUG-13 | Findings: | 9.5 MG/L |
| Chemical: | NITRATE (AS NO3) | | |
| Sample Collected: | 11-SEP-13 | Findings: | 8.6 MG/L |
| Chemical: | NITRATE (AS NO3) | | |
| Sample Collected: | 18-SEP-13 | Findings: | 8.5 MG/L |
| Chemical: | NITRATE (AS NO3) | | |
| Sample Collected: | 08-OCT-13 | Findings: | 8.6 MG/L |
| Chemical: | NITRATE (AS NO3) | | |
| Sample Collected: | 16-OCT-13 | Findings: | 8.4 MG/L |
| Chemical: | NITRATE (AS NO3) | | |
| Sample Collected: | 22-OCT-13 | Findings: | 9.2 MG/L |
| Chemical: | NITRATE (AS NO3) | | |
| Sample Collected: | 29-OCT-13 | Findings: | 8.8 MG/L |
| Chemical: | NITRATE (AS NO3) | | |
| Sample Collected: | 05-NOV-13 | Findings: | 9.2 MG/L |
| Chemical: | NITRATE (AS NO3) | | |
| Sample Collected: | 12-NOV-13 | Findings: | 8.7 MG/L |
| Chemical: | NITRATE (AS NO3) | | |
| Sample Collected: | 19-NOV-13 | Findings: | 8.8 MG/L |
| Chemical: | NITRATE (AS NO3) | | |
| Sample Collected: | 26-NOV-13 | Findings: | 14. MG/L |
| Chemical: | NITRATE (AS NO3) | | |
| Sample Collected: | 03-DEC-13 | Findings: | 9.4 MG/L |
| Chemical: | NITRATE (AS NO3) | | |
| Sample Collected: | 10-DEC-13 | Findings: | 12. MG/L |
| Chemical: | NITRATE (AS NO3) | | |
| Sample Collected: | 17-DEC-13 | Findings: | 2.1 MG/L |
| Chemical: | NITRATE (AS NO3) | | |
| Sample Collected: | 23-DEC-13 | Findings: | 11. MG/L |
| Chemical: | NITRATE (AS NO3) | | |
| Sample Collected: | 30-DEC-13 | Findings: | 12. MG/L |
| Chemical: | NITRATE (AS NO3) | | |
| Sample Collected: | 14-JAN-14 | Findings: | 9.2 MG/L |
| Chemical: | NITRATE (AS NO3) | | |
| Sample Collected: | 04-FEB-14 | Findings: | 11. MG/L |
| Chemical: | NITRATE (AS NO3) | | |
| Sample Collected: | 11-FEB-14 | Findings: | 12. MG/L |
| Chemical: | NITRATE (AS NO3) | | |

| | | | |
|---|---|---|---|
| Sample Collected: | 18-FEB-14 | Findings: | 13. MG/L |
| Chemical: | NITRATE (AS NO3) | | |
| Sample Collected: | 25-FEB-14 | Findings: | 14. MG/L |
| Chemical: | NITRATE (AS NO3) | | |
| Sample Collected: | 04-MAR-14 | Findings: | . 12. MG/L |
| Chemical: | NITRATE (AS NO3) | | |
| Sample Collected: | 11-MAR-14 | Findings: | . 8.8 MG/L |
| Chemical: | NITRATE (AS NO3) | | |
| Sample Collected: | 01-APR-14 | Findings: | . 2.4 MG/L |
| Chemical: | NITRATE (AS NO3) | | |
| Sample Collected: | 08-APR-14 | Findings: | . 8. MG/L |
| Chemical: | NITRATE (AS NO3) | | |
| Sample Collected: | 20-MAY-14 | Findings: | . 2.8 MG/L |
| Chemical: | NITRATE (AS NO3) | | |
| Sample Collected: | 03-JUN-14 | Findings: | . 5.2 MG/L |
| Chemical: | NITRATE (AS NO3) | | |
| Sample Collected: | 10-JUN-14 | Findings: | . 2.4 MG/L |
| Chemical: | NITRATE (AS NO3) | | |
| Sample Collected: | 22-JUL-14 | Findings: | . 10. MG/L |
| Chemical: | NITRATE (AS NO3) | | |
| Sample Collected: | 05-AUG-14 | Findings: | . 3.6 MG/L |
| Chemical: | NITRATE (AS NO3) | | |
| Sample Collected: | 19-AUG-14 | Findings: | . 5.8 MG/L |
| Chemical: | NITRATE (AS NO3) | | |
| Sample Collected: | 02-SEP-14 | Findings: | . 11. MG/L |
| Chemical: | NITRATE (AS NO3) | | |
| Sample Collected: | 09-SEP-14 | Findings: | . 4.1 MG/L |
| Chemical: | NITRATE (AS NO3) | | |
| Sample Collected: | 16-SEP-14 | Findings: | . 5.4 MG/L |
| Chemical: | NITRATE (AS NO3) | | |
| Sample Collected: | 23-SEP-14 | Findings: | . 4.6 MG/L |
| Chemical: | NITRATE (AS NO3) | | |
| Sample Collected: | 07-OCT-14 | Findings: | . 8.4 MG/L |
| Chemical: | NITRATE (AS NO3) | | |
| Sample Collected: | 14-OCT-14 | Findings: | . 6.7 MG/L |
| Chemical: | NITRATE (AS NO3) | | |
| Sample Collected: | 21-OCT-14 | Findings: | . 7.3 MG/L |
| Chemical: | NITRATE (AS NO3) | | |
| Sample Collected: | 04-NOV-14 | Findings: | . 5.9 MG/L |
| Chemical: | NITRATE (AS NO3) | | |
| Sample Collected: | 10-NOV-14 | Findings: | . 4.2 MG/L |
| Chemical: | NITRATE (AS NO3) | | |
| Sample Collected: | 18-NOV-14 | Findings: | . 2.3 MG/L |
| Chemical: | NITRATE (AS NO3) | | |

| | | | |
|---|---|---|---|
| Sample Collected: | 24-NOV-14 | Findings: | . 7.8 MG/L |
| Chemical: | NITRATE (AS NO3) | | |
| Sample Collected: | 02-DEC-14 | Findings: | . 11. MG/L |
| Chemical: | NITRATE (AS NO3) | | |
| Sample Collected: | 09-DEC-14 | Findings: | . 11. MG/L |
| Chemical: | NITRATE (AS NO3) | | |
| Sample Collected: | 16-DEC-14 | Findings: | . 16. MG/L |
| Chemical: | NITRATE (AS NO3) | | |
| Sample Collected: | 22-DEC-14 | Findings: | . 11. MG/L |
| Chemical: | NITRATE (AS NO3) | | |
| Sample Collected: | 29-DEC-14 | Findings: | . 15. MG/L |
| Chemical: | NITRATE (AS NO3) | | |
| Sample Collected: | 06-JAN-15 | Findings: | . 14. MG/L |
| Chemical: | NITRATE (AS NO3) | | |
| Sample Collected: | 13-JAN-15 | Findings: | . 16. MG/L |
| Chemical: | NITRATE (AS NO3) | | |
| Sample Collected: | 20-JAN-15 | Findings: | . 12. MG/L |
| Chemical: | NITRATE (AS NO3) | | |
| Sample Collected: | 27-JAN-15 | Findings: | . 16. MG/L |
| Chemical: | NITRATE (AS NO3) | | |
| Sample Collected: | 03-FEB-15 | Findings: | . 12. MG/L |
| Chemical: | NITRATE (AS NO3) | | |
| Sample Collected: | 10-FEB-15 | Findings: | . 14. MG/L |
| Chemical: | NITRATE (AS NO3) | | |
| Sample Collected: | 17-FEB-15 | Findings: | . 16. MG/L |
| Chemical: | NITRATE (AS NO3) | | |
| Sample Collected: | 24-FEB-15 | Findings: | . 14. MG/L |
| Chemical: | NITRATE (AS NO3) | | |
| Sample Collected: | 03-MAR-15 | Findings: | . 12. MG/L |
| Chemical: | NITRATE (AS NO3) | | |
| Sample Collected: | 10-MAR-15 | Findings: | . 10. MG/L |
| Chemical: | NITRATE (AS NO3) | | |
| Sample Collected: | 17-MAR-15 | Findings: | . 15. MG/L |
| Chemical: | NITRATE (AS NO3) | | |
| Sample Collected: | 24-MAR-15 | Findings: | . 12. MG/L |
| Chemical: | NITRATE (AS NO3) | | |
| Sample Collected: | 31-MAR-15 | Findings: | . 9.6 MG/L |
| Chemical: | NITRATE (AS NO3) | | |
| Sample Collected: | 07-APR-15 | Findings: | . 9.9 MG/L |
| Chemical: | NITRATE (AS NO3) | | |
| Sample Collected: | 14-APR-15 | Findings: | . 7. MG/L |
| Chemical: | NITRATE (AS NO3) | | |
| Sample Collected: | 21-APR-15 | Findings: | . 7.1 MG/L |
| Chemical: | NITRATE (AS NO3) | | |

| | | | |
|---|---|---|---|
| Sample Collected: | 28-APR-15 | Findings: | . 7.4 MG/L |
| Chemical: | NITRATE (AS NO3) | | |
| Sample Collected: | 05-MAY-15 | Findings: | . 5.8 MG/L |
| Chemical: | NITRATE (AS NO3) | | |
| Sample Collected: | 19-MAY-15 | Findings: | . 3.3 MG/L |
| Chemical: | NITRATE (AS NO3) | | |
| Sample Collected: | 26-MAY-15 | Findings: | . 7.4 MG/L |
| Chemical: | NITRATE (AS NO3) | | |

---

**C19**
**NNW** **CA WELLS** **507**
**1/2 - 1 Mile**
**Higher**

**Water System Information:**

| | | | |
|---|---|---|---|
| Prime Station Code: | 01N/13W-18N01 S | User ID: | MET |
| FRDS Number: | 1910043012 | County: | Los Angeles |
| District Number: | 15 | Station Type: | WELL/AMBNT/MUN/INTAKE/SUPPLY |
| Water Type: | Well/Groundwater | Well Status: | Inactive Raw |
| Source Lat/Long: | 341000.0 1181700.0 | Precision: | Undefined |
| Source Name: | GRAND VIEW WELL 16 - INACTIVE | | |
| System Number: | 1910043 | | |
| System Name: | GLENDALE-CITY, WATER DEPT. | | |
| Organization That Operates System: | | | |
| | 141 NO. GLENDALE AVE. LEVEL 4<br>GLENDALE, CA 91206 | | |
| Pop Served: | 184000 | Connections: | 32013 |
| Area Served: | GLENDALE | | |

---

**C20**
**NNW** **CA WELLS** **509**
**1/2 - 1 Mile**
**Higher**

**Water System Information:**

| | | | |
|---|---|---|---|
| Prime Station Code: | 01N/13W-19B07 S | User ID: | MET |
| FRDS Number: | 1910043011 | County: | Los Angeles |
| District Number: | 15 | Station Type: | WELL/AMBNT/MUN/INTAKE/SUPPLY |
| Water Type: | Well/Groundwater | Well Status: | Inactive Raw |
| Source Lat/Long: | 341000.0 1181700.0 | Precision: | Undefined |
| Source Name: | GRAND VIEW WELL 15 - INACTIVE | | |
| System Number: | 1910043 | | |
| System Name: | GLENDALE-CITY, WATER DEPT. | | |
| Organization That Operates System: | | | |
| | 141 NO. GLENDALE AVE. LEVEL 4<br>GLENDALE, CA 91206 | | |
| Pop Served: | 184000 | Connections: | 32013 |
| Area Served: | GLENDALE | | |

---

**C21**
**NNW** **CA WELLS** **508**
**1/2 - 1 Mile**
**Higher**

**Water System Information:**

| | | | |
|---|---|---|---|
| Prime Station Code: | 01N/13W-19B01 S | User ID: | MET |
| FRDS Number: | 1910043004 | County: | Los Angeles |
| District Number: | 15 | Station Type: | WELL/AMBNT/MUN/INTAKE/SUPPLY |
| Water Type: | Well/Groundwater | Well Status: | Inactive Raw |
| Source Lat/Long: | 341000.0 1181700.0 | Precision: | Undefined |
| Source Name: | GRAND VIEW WELL 01 - INACTIVE | | |
| System Number: | 1910043 | | |
| System Name: | GLENDALE-CITY, WATER DEPT. | | |
| Organization That Operates System: | | | |
| | 141 NO. GLENDALE AVE. LEVEL 4<br>GLENDALE, CA 91206 | | |
| Pop Served: | 184000 | Connections: | 32013 |
| Area Served: | GLENDALE | | |

---

**22**
**WNW**
**1/2 - 1 Mile**
**Higher**

**FED USGS** **USGS40000142251**

| | | | |
|---|---|---|---|
| Org. Identifier: | USGS-CA | | |
| Formal name: | USGS California Water Science Center | | |
| Monloc Identifier: | USGS-340942118172401 | | |
| Monloc name: | 001N013W19D003S | | |
| Monloc type: | Well | | |
| Monloc desc: | Not Reported | | |
| Huc code: | 18070105 | Drainagearea value: | Not Reported |
| Drainagearea Units: | Not Reported | Contrib drainagearea: | Not Reported |
| Contrib drainagearea units: | Not Reported | Latitude: | 34.1616734 |
| Longitude: | -118.2909097 | Sourcemap scale: | 24000 |
| Horiz Acc measure: | 1 | Horiz Acc measure units: | seconds |
| Horiz Collection method: | Interpolated from map | | |
| Horiz coord refsys: | NAD83 | Vert measure val: | Not Reported |
| Vert measure units: | Not Reported | Vertacc measure val: | Not Reported |
| Vert accmeasure units: | Not Reported | | |
| Vertcollection method: | Not Reported | | |
| Vert coord refsys: | Not Reported | Countrycode: | US |
| Aquifername: | California Coastal Basin aquifers | | |
| Formation type: | Not Reported | | |
| Aquifer type: | Not Reported | | |
| Construction date: | Not Reported | Welldepth: | 578 |
| Welldepth units: | ft | Wellholedepth: | 606 |
| Wellholedepth units: | ft | | |

Ground-water levels, Number of Measurements: 0

---

**23**
**NW**
**1/2 - 1 Mile**
**Higher**

**FED USGS** **USGS40000142270**

| | | | |
|---|---|---|---|
| Org. Identifier: | USGS-CA | | |
| Formal name: | USGS California Water Science Center | | |
| Monloc Identifier: | USGS-340950118171701 | | |
| Monloc name: | 001N013W18N001S | | |
| Monloc type: | Well | | |
| Monloc desc: | Not Reported | | |
| Huc code: | 18070105 | Drainagearea value: | Not Reported |
| Drainagearea Units: | Not Reported | Contrib drainagearea: | Not Reported |
| Contrib drainagearea units: | Not Reported | Latitude: | 34.1638956 |
| Longitude: | -118.2889652 | Sourcemap scale: | 24000 |

| | | | |
|---|---|---|---|
| Horiz Acc measure: | 1 | Horiz Acc measure units: | seconds |
| Horiz Collection method: | Interpolated from map | | |
| Horiz coord refsys: | NAD83 | Vert measure val: | Not Reported |
| Vert measure units: | Not Reported | Vertacc measure val: | Not Reported |
| Vert accmeasure units: | Not Reported | | |
| Vertcollection method: | Not Reported | | |
| Vert coord refsys: | Not Reported | Countrycode: | US |
| Aquifername: | California Coastal Basin aquifers | | |
| Formation type: | Not Reported | | |
| Aquifer type: | Not Reported | | |
| Construction date: | Not Reported | Welldepth: | 522 |
| Welldepth units: | ft | Wellholedepth: | 551 |
| Wellholedepth units: | ft | | |

Ground-water levels, Number of Measurements: 0

# GEOCHECK® - PHYSICAL SETTING SOURCE MAP FINDINGS
# RADON

**AREA RADON INFORMATION**

State Database: CA Radon

Radon Test Results

| Zipcode | Num Tests | > 4 pCi/L |
|---|---|---|
| 91201 | 17 | 0 |

Federal EPA Radon Zone for LOS ANGELES County: 2

Note: Zone 1 indoor average level > 4 pCi/L.
: Zone 2 indoor average level >= 2 pCi/L and <= 4 pCi/L.
: Zone 3 indoor average level < 2 pCi/L.

---

Federal Area Radon Information for Zip Code: 91201

Number of sites tested: 1

| Area | Average Activity | % <4 pCi/L | % 4-20 pCi/L | % >20 pCi/L |
|---|---|---|---|---|
| Living Area - 1st Floor | -1.000 pCi/L | 100% | 0% | 0% |
| Living Area - 2nd Floor | Not Reported | Not Reported | Not Reported | Not Reported |
| Basement | Not Reported | Not Reported | Not Reported | Not Reported |

# PHYSICAL SETTING SOURCE RECORDS SEARCHED

## TOPOGRAPHIC INFORMATION

USGS 7.5' Digital Elevation Model (DEM)
Source: United States Geologic Survey
EDR acquired the USGS 7.5' Digital Elevation Model in 2002 and updated it in 2006. The 7.5 minute DEM corresponds to the USGS 1:24,000- and 1:25,000-scale topographic quadrangle maps. The DEM provides elevation data with consistent elevation units and projection.

Current USGS 7.5 Minute Topographic Map
Source: U.S. Geological Survey

## HYDROLOGIC INFORMATION

Flood Zone Data: This data, available in select counties across the country, was obtained by EDR in 2003 & 2011 from the Federal Emergency Management Agency (FEMA). Data depicts 100-year and 500-year flood zones as defined by FEMA.

NWI: National Wetlands Inventory. This data, available in select counties across the country, was obtained by EDR in 2002, 2005 and 2010 from the U.S. Fish and Wildlife Service.

State Wetlands Data: Wetland Inventory
Source: Department of Fish & Game
Telephone: 916-445-0411

## HYDROGEOLOGIC INFORMATION

AQUIFLOW[R] Information System
Source: EDR proprietary database of groundwater flow information
EDR has developed the AQUIFLOW Information System (AIS) to provide data on the general direction of groundwater flow at specific points. EDR has reviewed reports submitted to regulatory authorities at select sites and has extracted the date of the report, hydrogeologically determined groundwater flow direction and depth to water table information.

## GEOLOGIC INFORMATION

Geologic Age and Rock Stratigraphic Unit
Source: P.G. Schruben, R.E. Arndt and W.J. Bawiec, Geology of the Conterminous U.S. at 1:2,500,000 Scale - A digital representation of the 1974 P.B. King and H.M. Beikman Map, USGS Digital Data Series DDS - 11 (1994).

STATSGO: State Soil Geographic Database
Source: Department of Agriculture, Natural Resources Conservation Service (NRCS)
The U.S. Department of Agriculture's (USDA) Natural Resources Conservation Service (NRCS) leads the national Conservation Soil Survey (NCSS) and is responsible for collecting, storing, maintaining and distributing soil survey information for privately owned lands in the United States. A soil map in a soil survey is a representation of soil patterns in a landscape. Soil maps for STATSGO are compiled by generalizing more detailed (SSURGO) soil survey maps.

SSURGO: Soil Survey Geographic Database
Source: Department of Agriculture, Natural Resources Conservation Service (NRCS)
Telephone: 800-672-5559
SSURGO is the most detailed level of mapping done by the Natural Resources Conservation Service, mapping scales generally range from 1:12,000 to 1:63,360. Field mapping methods using national standards are used to construct the soil maps in the Soil Survey Geographic (SSURGO) database. SSURGO digitizing duplicates the original soil survey maps. This level of mapping is designed for use by landowners, townships and county natural resource planning and management.

# PHYSICAL SETTING SOURCE RECORDS SEARCHED

## LOCAL / REGIONAL WATER AGENCY RECORDS

FEDERAL WATER WELLS

PWS: Public Water Systems
Source: EPA/Office of Drinking Water
Telephone: 202-564-3750
Public Water System data from the Federal Reporting Data System. A PWS is any water system which provides water to at least 25 people for at least 60 days annually. PWSs provide water from wells, rivers and other sources.

PWS ENF: Public Water Systems Violation and Enforcement Data
Source: EPA/Office of Drinking Water
Telephone: 202-564-3750
Violation and Enforcement data for Public Water Systems from the Safe Drinking Water Information System (SDWIS) after August 1995. Prior to August 1995, the data came from the Federal Reporting Data System (FRDS).

USGS Water Wells: USGS National Water Inventory System (NWIS)
This database contains descriptive information on sites where the USGS collects or has collected data on surface water and/or groundwater. The groundwater data includes information on wells, springs, and other sources of groundwater.

STATE RECORDS

Water Well Database
Source: Department of Water Resources
Telephone: 916-651-9648

California Drinking Water Quality Database
Source: Department of Public Health
Telephone: 916-324-2319
The database includes all drinking water compliance and special studies monitoring for the state of California since 1984. It consists of over 3,200,000 individual analyses along with well and water system information.

## OTHER STATE DATABASE INFORMATION

California Oil and Gas Well Locations
Source: Department of Conservation
Telephone: 916-323-1779
Oil and Gas well locations in the state.

RADON

State Database: CA Radon
Source: Department of Health Services
Telephone: 916-324-2208
Radon Database for California

Area Radon Information
Source: USGS
Telephone: 703-356-4020
The National Radon Database has been developed by the U.S. Environmental Protection Agency (USEPA) and is a compilation of the EPA/State Residential Radon Survey and the National Residential Radon Survey. The study covers the years 1986 - 1992. Where necessary data has been supplemented by information collected at private sources such as universities and research institutions.

EPA Radon Zones
Source: EPA
Telephone: 703-356-4020
Sections 307 & 309 of IRAA directed EPA to list and identify areas of U.S. with the potential for elevated indoor radon levels.

# PHYSICAL SETTING SOURCE RECORDS SEARCHED

OTHER

Airport Landing Facilities: Private and public use landing facilities
Source: Federal Aviation Administration, 800-457-6656

Epicenters: World earthquake epicenters, Richter 5 or greater
Source: Department of Commerce, National Oceanic and Atmospheric Administration

California Earthquake Fault Lines: The fault lines displayed on EDR's Topographic map are digitized quaternary fault lines, prepared in 1975 by the United State Geological Survey. Additional information (also from 1975) regarding activity at specific fault lines comes from California's Preliminary Fault Activity Map prepared by the California Division of Mines and Geology.

**STREET AND ADDRESS INFORMATION**

© 2015 TomTom North America, Inc. All rights reserved. This material is proprietary and the subject of copyright protection and other intellectual property rights owned by or licensed to Tele Atlas North America, Inc. The use of this material is subject to the terms of a license agreement. You will be held liable for any unauthorized copying or disclosure of this material.

# Appendix E
# HISTORICAL RECORDS

**Grayson Power Plant**
800 Air Way
Glendale, CA 91201

Inquiry Number: 4433851.5
October 08, 2015

# The EDR-City Directory Abstract

Environmental Data Resources Inc

6 Armstrong Road
Shelton, CT 06484
800.352.0050
www.edrnet.com

# TABLE OF CONTENTS

## SECTION

**Executive Summary**

**Findings**

**City Directory Images**

***Thank you for your business.***
Please contact EDR at 1-800-352-0050
with any questions or comments.

**Disclaimer - Copyright and Trademark Notice**

This Report contains certain information obtained from a variety of public and other sources reasonably available to Environmental Data Resources, Inc. It cannot be concluded from this Report that coverage information for the target and surrounding properties does not exist from other sources. **NO WARRANTY EXPRESSED OR IMPLIED, IS MADE WHATSOEVER IN CONNECTION WITH THIS REPORT. ENVIRONMENTAL DATA RESOURCES, INC. SPECIFICALLY DISCLAIMS THE MAKING OF ANY SUCH WARRANTIES, INCLUDING WITHOUT LIMITATION, MERCHANTABILITY OR FITNESS FOR A PARTICULAR USE OR PURPOSE. ALL RISK IS ASSUMED BY THE USER. IN NO EVENT SHALL ENVIRONMENTAL DATA RESOURCES, INC. BE LIABLE TO ANYONE, WHETHER ARISING OUT OF ERRORS OR OMISSIONS, NEGLIGENCE, ACCIDENT OR ANY OTHER CAUSE, FOR ANY LOSS OR DAMAGE, INCLUDING, WITHOUT LIMITATION, SPECIAL, INCIDENTAL, CONSEQUENTIAL, OR EXEMPLARY DAMAGES. ANY LIABILITY ON THE PART OF ENVIRONMENTAL DATA RESOURCES, INC. IS STRICTLY LIMITED TO A REFUND OF THE AMOUNT PAID FOR THIS REPORT.** Purchaser accepts this Report "AS IS". Any analyses, estimates, ratings, environmental risk levels or risk codes provided in this Report are provided for illustrative purposes only, and are not intended to provide, nor should they be interpreted as providing any facts regarding, or prediction orforecast of, any environmental risk for any property. Only a Phase I Environmental Site Assessment performed by an environmental professional can provide information regarding the environmental risk for any property. Additionally, the information provided in this Report is not to be construed as legal advice.

Copyright 2015 by Environmental Data Resources, Inc. All rights reserved. Reproduction in any media or format, in whole or in part, of any report or map of Environmental Data Resources, Inc. or its affiliates is prohibited without prior written permission.

EDR and its logos (including Sanborn and Sanborn Map) are trademarks of Environmental Data Resources, Inc. or its affiliates. All other trademarks used herein are the property of their respective owners.

# EXECUTIVE SUMMARY

## DESCRIPTION

Environmental Data Resources, Inc.'s (EDR) City Directory Abstract is a screening tool designed to assist environmental professionals in evaluating potential liability on a target property resulting from past activities. EDR's City Directory Abstract includes a search and abstract of available city directory data. For each address, the directory lists the name of the corresponding occupant at five year intervals.

Business directories including city, cross reference and telephone directories were reviewed, if available, at approximately five year intervals for the years spanning 1920 through 2013. This report compiles information gathered in this review by geocoding the latitude and longitude of properties identified and gathering information about properties within 660 feet of the target property.

A summary of the information obtained is provided in the text of this report.

## RESEARCH SUMMARY

The following research sources were consulted in the preparation of this report. An "X" indicates where information was identified in the source and provided in this report.

| Year | Source | TP | Adjoining | Text Abstract | Source Image |
|---|---|---|---|---|---|
| 2013 | Cole Information Services | - | X | X | - |
| 2008 | Cole Information Services | - | X | X | - |
| 2006 | Haines Company, Inc. | - | X | X | - |
| 2004 | Haines Company | - | - | - | - |
| 2003 | Haines & Company | - | - | - | - |
| 2001 | Haines & Company, Inc. | - | X | X | - |
| 2000 | Haines | - | - | - | - |
| 1999 | Haines Company | - | - | - | - |
| 1996 | GTE | - | - | - | - |
| 1995 | Pacific Bell | - | X | X | - |
| 1992 | PACIFIC BELL WHITE PAGES | - | - | - | - |
| 1991 | Pacific Bell | - | X | X | - |
| 1990 | Pacific Bell | - | X | X | - |
| 1986 | Pacific Bell | - | X | X | - |
| 1985 | Pacific Bell | - | X | X | - |
| 1981 | Pacific Telephone | - | X | X | - |
| 1980 | Pacific Telephone | - | X | X | - |
| 1976 | Pacific Telephone | - | X | X | - |
| 1975 | Pacific Telephone | - | X | X | - |
| 1972 | R. L. Polk & Co. | - | X | X | - |
| 1971 | Pacific Telephone | - | X | X | - |
| 1970 | Pacific Telephone | X | X | X | - |
| | R. L. Polk & Co. | X | X | X | - |
| 1969 | Pacific Telephone | - | - | - | - |
| 1967 | Pacific Telephone | X | X | X | - |

# EXECUTIVE SUMMARY

| Year | Source | TP | Adjoining | Text Abstract | Source Image |
|---|---|---|---|---|---|
| 1967 | R. L. Polk & Co. | X | X | X | - |
| 1966 | Pacific Telephone | - | X | X | - |
| 1965 | Pacific Telephone | - | X | X | - |
| 1964 | Pacific Telephone | - | X | X | - |
| 1963 | Pacific Telephone | - | - | - | - |
| 1962 | Pacific Telephone | X | X | X | - |
| 1961 | R. L. Polk & Co. | - | - | - | - |
| 1960 | Pacific Telephone | - | X | X | - |
| | Pacific Telephone and Telegraph Company | - | X | X | - |
| | R. L. Polk & Co. | - | X | X | - |
| 1958 | Pacific Telephone | - | X | X | - |
| 1957 | Pacific Telephone | - | X | X | - |
| 1956 | Pacific Telephone | - | X | X | - |
| 1955 | R. L. Polk & Co. | - | X | X | - |
| 1954 | R. L. Polk & Co. | - | - | - | - |
| 1952 | Los Angeles Directory Co. | - | - | - | - |
| 1951 | Pacific Telephone & Telegraph Co. | - | X | X | - |
| | R. L. Polk & Co. | - | X | X | - |
| 1950 | Pacific Telephone | - | X | X | - |
| 1949 | Los Angeles Directory Co. | - | - | - | - |
| 1948 | Associated Telephone Company, Ltd. | - | - | - | - |
| 1947 | Pacific Directory Co. | - | - | - | - |
| 1946 | Southern California Telephone Co | - | - | - | - |
| 1945 | The Glendale Directory Co. | - | X | X | - |
| 1944 | R. L. Polk & Co. | - | - | - | - |
| 1942 | Los Angeles Directory Co. | - | X | X | - |
| 1940 | Glendale Directory Co. | - | X | X | - |
| | Los Angeles Diretcory Co Publishers | - | X | X | - |
| 1939 | Los Angeles Directory Co. | - | - | - | - |
| 1938 | Los Angeles Directory Company Publishers | - | - | - | - |
| 1937 | Los Angeles Directory Co. | - | X | X | - |
| 1936 | Los Angeles Directory Co. | - | - | - | - |
| 1935 | Los Angeles Directory Co. | - | X | X | - |
| | Los Angeles Directory Company Publisher | - | X | X | - |
| 1934 | Los Angeles Directory Co. | - | - | - | - |
| 1933 | Los Angeles Directory Co. | - | X | X | - |
| 1932 | Los Angeles Directory Co. | - | - | - | - |
| 1931 | TRIBUNE-NEWS PUBLISHING CO. | - | - | - | - |
| 1930 | Los Angeles Directory Co. | - | - | - | - |
| 1929 | Los Angeles Directory Co. | - | X | X | - |

# EXECUTIVE SUMMARY

| Year | Source | TP | Adjoining | Text Abstract | Source Image |
|---|---|---|---|---|---|
| 1928 | Los Angeles Directory Co. | - | - | - | - |
| 1927 | Los Angeles Directory Co. | - | - | - | - |
| 1926 | Los Angeles Directory Co. | - | - | - | - |
| 1925 | Los Angeles Directory Co. | - | - | - | - |
| 1924 | Los Angeles Directory Co. | - | X | X | - |
| 1923 | Los Angeles Directory Co. | - | - | - | - |
| 1921 | Los Angeles Directory Co. | - | - | - | - |
| 1920 | Los Angeles Directory Co. | - | - | - | - |

# EXECUTIVE SUMMARY

## SELECTED ADDRESSES

The following addresses were selected by the client, for EDR to research. An "X" indicates where information was identified.

| ***Address*** | ***Type*** | ***Findings*** |
|---|---|---|
| 5750 San Fernando Road | Client Entered | |
| 807 Air Way | Client Entered | X |

# FINDINGS

## TARGET PROPERTY INFORMATION

### ADDRESS

800 Air Way
Glendale, CA 91201

### FINDINGS DETAIL

Target Property research detail.

### AIR WAY

**800 AIR WAY**

| *Year* | *Uses* | *Source* |
|---|---|---|
| 1970 | GLENDALE CITY OF STEAM PLANT GLENDALE | Pacific Telephone |
| 1967 | CITY OF GLENDALE CORPORATE YARD | R. L. Polk & Co. |
| 1962 | GLENDALE CITY OF STEAM PLANT GLENDALE | Pacific Telephone |

# FINDINGS

## ADJOINING PROPERTY DETAIL

The following Adjoining Property addresses were researched for this report. Detailed findings are provided for each address.

### Air Way

**807 Air Way**

| Year | Uses | Source |
|---|---|---|
| 2001 | GLENDL ENVELOPE CO | Haines & Company, Inc. |
| 1995 | Glendale Envelope Co | Pacific Bell |
| 1991 | Glendale Envelope Co | Pacific Bell |
| 1985 | Glendale Envelope Co | Pacific Bell |
| 1981 | BARBER JERRY GOLF CO GLENDALE | Pacific Telephone |
| 1980 | BARBER JERRY GOLF CO | Pacific Telephone |
| | BARBER JERRY GOLF CO | Pacific Telephone |
| 1975 | BARBER JERRY GOLF CO | Pacific Telephone |
| 1972 | VACANT | R. L. Polk & Co. |
| 1971 | Jorgenson Electro Sales Ca mfrs agt | Pacific Telephone |
| 1970 | JORGENSON ELECTRO SALES CO MFRS AGT | Pacific Telephone |
| | FANNER MFG CO | Pacific Telephone |
| | PENN-UNION ELECTRIC | Pacific Telephone |
| | BIG BEAM | Pacific Telephone |
| | NIFE INC | Pacific Telephone |
| | NIFE INC | Pacific Telephone |
| | JORGENSON ELECTRO SALES CO MFRS AGT | Pacific Telephone |
| | FANNER MFG CO | Pacific Telephone |
| | PENN-UNION ELECTRIC | Pacific Telephone |
| | BIG BEAM | Pacific Telephone |
| 1967 | Kerite Co The elec cable | Pacific Telephone |
| | Yosng R A & Co mfrs agt | Pacific Telephone |
| | YOUNG R A AND CO MFR AGT | R. L. Polk & Co. |

### AIR WAY

**811 AIR WAY**

| Year | Uses | Source |
|---|---|---|
| 2001 | M & R MACHINE INC | Haines & Company, Inc. |
| 1990 | M & R MACHINE INC GLENDALE | Pacific Bell |

# FINDINGS

| Year | Uses | Source |
|---|---|---|
| 1986 | M & R MACHINE INC GLENDALE | Pacific Bell |
| 1980 | CLUM WOODWORTH B PRODUCT DEVELOPMENT CORP GLENDALE | Pacific Telephone |
| 1967 | W 6 F MFG INC SHOWER 6 PATIO DOORS | R. L. Polk & Co. |
| 1960 | RCH MFG CO FILTER MFRS | R. L. Polk & Co. |
| 1958 | NUTT SHEL CO airpln parts | Pacific Telephone |
| | Hutson Lester E Nutt Shel Co airpln pts | Pacific Telephone |
| 1955 | NUTT SHEL CO INC AIR CRAFT PARTS | R. L. Polk & Co. |

**824 AIR WAY**

| Year | Uses | Source |
|---|---|---|
| 2001 | XXXX | Haines & Company, Inc. |
| 1967 | PACIFIC COAST ENGINE 6 PARTS INC AIRCRAFT 6 ENGINE PARTS | R. L. Polk & Co. |

**847 AIR WAY**

| Year | Uses | Source |
|---|---|---|
| 2001 | XXXX | Haines & Company, Inc. |
| 1995 | Apderco Carpet Care | Pacific Bell |
| 1991 | Marsan Corp | Pacific Bell |
| 1985 | Fullerton Sales Co | Pacific Bell |
| 1980 | FULLERTON SALES CO | Pacific Telephone |
| 1975 | Fullerton Sales Co | Pacific Telephone |
| 1972 | VACANT | R. L. Polk & Co. |
| 1960 | TECHNIBILT SERV CORP MKT | R. L. Polk & Co. |

**905 AIR WAY**

| Year | Uses | Source |
|---|---|---|
| 1985 | First Prize Pet Products | Pacific Bell |
| | Pearce Plastics Inc | Pacific Bell |
| | Pierce Plastics Inc | Pacific Bell |
| | Tooling Standards Inc | Pacific Bell |
| 1981 | PIERCE PLASTICS INC GLENDALE | Pacific Telephone |
| | FIRST PRIZE PET PRODUCTS GLENDALE | Pacific Telephone |
| | PEARCE PLASTICS INC GLENDALE | Pacific Telephone |
| | PEARCE EQUESTRIAN MFG GLENDALE | Pacific Telephone |
| 1980 | PIERCE PLASTICS INC | Pacific Telephone |
| | TOOLING STANDARDS INC | Pacific Telephone |

# FINDINGS

| Year | Uses | Source |
|---|---|---|
| 1980 | FIRST PRIZE PET PRODUCTS | Pacific Telephone |
| | PEARCE EQUESTRIAN MFG | Pacific Telephone |
| 1972 | VACANT | R. L. Polk & Co. |
| 1971 | Hamel J S engnr | Pacific Telephone |
| 1970 | TECHNIBILT CORP | Pacific Telephone |
| | TECHNIBILT CORP | Pacific Telephone |
| | TECHNIBLLT CORP | Pacific Telephone |
| 1967 | TECHNIBILT CORP | Pacific Telephone |
| | TECHNIBILT CORP BASKET MFRS | R. L. Polk & Co. |
| 1964 | TECHNIBILT CORP | Pacific Telephone |
| 1962 | TECHNIBILT CORP | Pacific Telephone |
| | TECHNIBILT CORP | Pacific Telephone |
| 1960 | TECHNIBILT CORP | Pacific Telephone |
| | TECHNIBILT CORP BASKET MFRS | R. L. Polk & Co. |
| 1958 | Technibilt Corp | Pacific Telephone |
| 1957 | TECHNIBLLT CORP | Pacific Telephone |
| 1956 | TECHNIBILT CORP | Pacific Telephone |
| 1955 | TECHNIBILT CORP BASKET MFRS | R. L. Polk & Co. |

**908 AIR WAY**

| Year | Uses | Source |
|---|---|---|
| 1980 | PEARCE PLASTICS INC | Pacific Telephone |

**911 AIR WAY**

| Year | Uses | Source |
|---|---|---|
| 1995 | Pacific Photo Express | Pacific Bell |
| | ! Pacific Plastic Design Inc | Pacific Bell |
| 1991 | From Canoga Park Telephones Call | Pacific Bell |
| | Pacific Plumbers | Pacific Bell |
| | Pacific Plastic Design Inc | Pacific Bell |
| 1985 | Pacific Plastic Design Inc | Pacific Bell |
| 1980 | PACIFIC PLASTIC DESIGN GLENDALE | Pacific Telephone |
| 1975 | PIERCE PLASTICS INC | Pacific Telephone |
| | PEARCE PLASTICS INC | Pacific Telephone |
| | Pearce Equestrian Mfg | Pacific Telephone |
| | First Award Pet Products | Pacific Telephone |
| | Action Toys Inc | Pacific Telephone |
| 1972 | PEARCE PLASTIC INC MFRS | R. L. Polk & Co. |
| 1971 | Action Toys Inc | Pacific Telephone |

# FINDINGS

| Year | Uses | Source |
|---|---|---|
| 1971 | First Award Pet Products | Pacific Telephone |
| | Pearce Equestrian Mfg | Pacific Telephone |
| | PEARCE PLASTICS INC | Pacific Telephone |
| | Pierce Plastics Inc | Pacific Telephone |
| 1970 | PIERCE PLASTICS INC | Pacific Telephone |
| | PEARCE PLASTICS INC | Pacific Telephone |
| | PIERCE PLASTICS INC | Pacific Telephone |
| | PEARCE PLASTICS INC | Pacific Telephone |
| 1967 | PEARCE PLASTICS INC | Pacific Telephone |
| | PIERCE PLASTICS INC | Pacific Telephone |
| | PEARCE PLASTIC INC PLASTIC | R. L. Polk & Co. |
| 1965 | PEARCE PLASTICS INC | Pacific Telephone |
| 1964 | PEARCE PLASTICS INC | Pacific Telephone |
| 1962 | PEARCE PLASTICS INC | Pacific Telephone |
| | PEARCE PLA STICS INC | Pacific Telephone |
| 1960 | PEARCE PLASTICS | Pacific Telephone |
| | PEARCE PLASTIC MODELS | R. L. Polk & Co. |
| 1958 | PEARCE PLASTICS | Pacific Telephone |
| 1957 | PEARCE PLASTICS | Pacific Telephone |
| 1956 | PEARCE PLASTIC MODELS | Pacific Telephone |
| 1955 | L & S ENG CO A | R. L. Polk & Co. |
| | PEARCE PLASTIC MODELS | R. L. Polk & Co. |
| 1951 | TECHNLBLLT CORP BASKET | R. L. Polk & Co. |
| 1950 | TECHNIBILT CORP | Pacific Telephone |
| | TECHNIBILT CORP | Pacific Telephone |

**914 AIR WAY**

| Year | Uses | Source |
|---|---|---|
| 1958 | Stockton Wire Productg | Pacific Telephone |
| 1955 | STOCKTON RAY F WIRE PRODUCTS CO INC A | R. L. Polk & Co. |

**915 AIR WAY**

| Year | Uses | Source |
|---|---|---|
| 2013 | MONTEREY TOW SERVICE | Cole Information Services |
| 2001 | XXXX | Haines & Company, Inc. |
| 1985 | From Los Angelos Telephones Call | Pacific Bell |
| | Sperry Electric Inc | Pacific Bell |
| 1981 | SPERRY ELECTRIC INC GLENDALE | Pacific Telephone |

# FINDINGS

| Year | Uses | Source |
|---|---|---|
| 1980 | SPERRY ELECTRIC CO | Pacific Telephone |
| 1975 | Sperry Electric Co | Pacific Telephone |
| 1972 | SPERRY ELECTRIC CO ELEC CONTR | R. L. Polk & Co. |
| 1970 | SPERRY ELECTRIC CO | Pacific Telephone |
| | SPERRY ELECTRIC CO | Pacific Telephone |
| 1967 | Sperry Electric Co | Pacific Telephone |
| 1960 | WOHLE EMIL (STGE) | R. L. Polk & Co. |
| 1955 | SEASIDE OIL CO A | R. L. Polk & Co. |
| 1951 | SEASIDE OIL CO | R. L. Polk & Co. |
| 1950 | K B K OIL CO | Pacific Telephone |
| | K B K OIL CO | Pacific Telephone |

**920 AIR WAY**

| Year | Uses | Source |
|---|---|---|
| 1972 | ROBERT MORTON & DAHNKEN MAIL ORDER | R. L. Polk & Co. |
| | PRODUCTION AUTOMATION CORP PACKAGING ASIS & LEASING | R. L. Polk & Co. |
| 1970 | PRODUCTION AUTOMATION CORP | Pacific Telephone |
| | PRODUCTION AUTOMATION CORP | Pacific Telephone |
| 1967 | MORTON ROBT & DAHNKEN MAIL ORDER HOUSE | R. L. Polk & Co. |

**923 AIR WAY**

| Year | Uses | Source |
|---|---|---|
| 2001 | KENDALL Patrick | Haines & Company, Inc. |

**927 AIR WAY**

| Year | Uses | Source |
|---|---|---|
| 2013 | ALL AMERICAN TOWING | Cole Information Services |
| | MONTEREY TOW | Cole Information Services |
| 2008 | J & E SERVICE INC | Cole Information Services |
| 2001 | KENDALL Patrick | Haines & Company, Inc. |
| 1972 | MONTEREY TOWING SERVICE | R. L. Polk & Co. |
| 1967 | MONTEREY TOWING SERVICE | R. L. Polk & Co. |
| 1962 | MONTEREY TOW SERV | Pacific Telephone |
| 1960 | MONTEREY TOW SERV | R. L. Polk & Co. |
| 1956 | BUNCH V L TRANSPORTATION SERV TRCKNG | Pacific Telephone |
| | BUNCH V L VAN & STORAGE | Pacific Telephone |
| 1955 | BUNCH V L TRANS SERV | R. L. Polk & Co. |

# FINDINGS

| Year | Uses | Source |
|---|---|---|
| 1951 | GRIFFIN AIRCRAFT CO | R. L. Polk & Co. |
| 1950 | GRIFFIN AIRCRAFT COMPANY | Pacific Telephone |
| | GRIFFIN AIRCRAFT COMPANY | Pacific Telephone |

**930 AIR WAY**

| Year | Uses | Source |
|---|---|---|
| 2001 | XXXX | Haines & Company, Inc. |
| 1975 | Accounts Recovery Agency Division Of Traid Corporation | Pacific Telephone |
| | TRAID CORPORATION | Pacific Telephone |
| 1972 | TRAID CORP (PHOTO LABY DIV) PHOTO | R. L. Polk & Co. |
| 1967 | VACANT | R. L. Polk & Co. |

**931 AIR WAY**

| Year | Uses | Source |
|---|---|---|
| 2001 | XXXX | Haines & Company, Inc. |
| 1980 | MONOPOLE INC | Pacific Telephone |
| | MONOPOLE INC | Pacific Telephone |
| 1955 | VACANT | R. L. Polk & Co. |
| 1951 | STAPP LOUIS AUTO RACING | R. L. Polk & Co. |

**933 AIR WAY**

| Year | Uses | Source |
|---|---|---|
| 2013 | DRAWSTRINGS CALIF INC | Cole Information Services |
| 2008 | DRAWSTRINGS | Cole Information Services |
| 2006 | CAUF | Haines Company, Inc. |
| | DRAWSTRINGS | Haines Company, Inc. |
| | DRAWSTRINGS | Haines Company, Inc. |
| | CAUF INC | Haines Company, Inc. |
| 2001 | CALIF DRAWSTRINGS | Haines & Company, Inc. |
| | DRAWSTRINGS CALIF INC | Haines & Company, Inc. |
| | PAPELIAN Ashod | Haines & Company, Inc. |
| 1991 | Drawstrings Calif Inc | Pacific Bell |
| | Drax Janice I | Pacific Bell |
| | Drayer Bernard | Pacific Bell |
| | Drayer Cleon | Pacific Bell |
| 1985 | Hundley Co Inc | Pacific Bell |
| | Love Computers | Pacific Bell |
| 1981 | HUNDLEY CO INC GLENDALE | Pacific Telephone |

# FINDINGS

| Year | Uses | Source |
|---|---|---|
| 1981 | TIMER & INDUSTRIAL CONTROLS GLENDALE | Pacific Telephone |
| 1980 | TIMER & INDUSTRIAL CONTROLS | Pacific Telephone |
| | HUNDLEY CO INC | Pacific Telephone |
| | KPK INC | Pacific Telephone |
| 1975 | Eagle Signal Hundley Co Inc | Pacific Telephone |
| | Hundley Co Inc | Pacific Telephone |
| | KPK Inc | Pacific Telephone |
| | Williams Claude P Inc watrprfng contr | Pacific Telephone |
| 1972 | WILLIAMS CLAUDE P INC WATERPROOFING | R. L. Polk & Co. |
| 1971 | Williams Claude P Inc watrprfng contr | Pacific Telephone |
| 1970 | WILLIAMS CLAUDE P INC WATRPRFNG CONTR | Pacific Telephone |
| | WILLIAMS CLAUDE P INC WATRPRFNG CONTR | Pacific Telephone |
| 1967 | HAGELIN AIRCRAFT MOTORS CO | Pacific Telephone |
| | Hagelin Aircraft Motors Co | Pacific Telephone |
| | HAGELIN AIRCRAFT MOTORS CO | R. L. Polk & Co. |
| 1964 | HAGELIN AIRCRAFT MOTORS CO | Pacific Telephone |
| 1962 | HAGELIN AIRCRAFT MOTORS CO | Pacific Telephone |
| | HAGELIN AIRCRAFT MOTORS CO | Pacific Telephone |
| | Hagelin Aircraft Motors Co | Pacific Telephone |
| 1960 | HAGELIN AIRCRAFT MOTORS CO | Pacific Telephone |
| | HAGELIN AIRCRAFT MOTORS CO | Pacific Telephone |
| | HAGELIN AIRCRAFT MOTORS CO AIRCRAFT EQUIP | R. L. Polk & Co. |
| 1958 | Hagelin Aircraft Motors Co | Pacific Telephone |
| 1956 | ENSALCO INC | Pacific Telephone |
| | HAGELIN AIRCRAFT MOTORS CO | Pacific Telephone |
| 1955 | HAGELIN AIRCRAFT MOTORS CO AIRCRAFT EQUIP | R. L. Polk & Co. |
| 1951 | HAGELIN AIR RAFT MOTORS CO | R. L. Polk & Co. |
| 1950 | HAGELIN AIRCRAFT MOTORS CO | Pacific Telephone |
| | CRACO SALES CORP | Pacific Telephone |
| | CRACO SALES CORP | Pacific Telephone |
| | HAGELIN AIRCRAFT MOTORS CO | Pacific Telephone |

**941 AIR WAY**

| Year | Uses | Source |
|---|---|---|
| 2013 | J P WEAVER CO | Cole Information Services |

# FINDINGS

| Year | Uses | Source |
|---|---|---|
| 2008 | J P WEAVER & CO | Cole Information Services |
| | RTTMZG LLC | Cole Information Services |
| 2006 | JP WEAVER CO | Haines Company, Inc. |
| 2001 | KAST Lenna | Haines & Company, Inc. |
| | J P WEAVER CO | Haines & Company, Inc. |
| 1995 | J P Weaver Co | Pacific Bell |
| 1991 | Accetta C | Pacific Bell |
| | Fromlos Angeles Tneephones Ca | Pacific Bell |
| | Accessory Wire Products | Pacific Bell |
| 1990 | ACCESSORY WIRE PRODUCTS GLENDALE | Pacific Bell |
| 1986 | ACCESSORY WIRE PRODUCTS GLENDALE | Pacific Bell |
| 1985 | Accessory Wire Products | Pacific Bell |
| | Acciari John paintng | Pacific Bell |
| 1981 | ACCESSORY WIRE PRODUCTS GLENDALE | Pacific Telephone |
| 1980 | Accessory Wire Praducts | Pacific Telephone |
| | ACCESSORY WIRE PRODUCTS | Pacific Telephone |
| 1975 | Accessory Wire Products | Pacific Telephone |
| 1972 | STOCKTON WIRE PRODUCTS | R. L. Polk & Co. |
| 1971 | Stockton Wire Products | Pacific Telephone |
| 1970 | STOCKTON WIRE PRODUCTS | Pacific Telephone |
| | STOCKTON WIRE PRODUCTS | Pacific Telephone |
| 1967 | Stockton Wire Products | Pacific Telephone |
| | STOCKTON WIRE PRODUCTS WIRE MFRS | R. L. Polk & Co. |
| 1962 | STOCKTON WIRE PRODUCTS | Pacific Telephone |
| 1960 | STOCKTON WIRE PRODUCTS | R. L. Polk & Co. |
| 1956 | STOCKTON RAY F WIRE PRODUCTS CO INC | Pacific Telephone |

**945 AIR WAY**

| Year | Uses | Source |
|---|---|---|
| 2013 | SOCAL PRODUCTION SERVICES | Cole Information Services |
| 2001 | LASER LIGHT TECHNOLOGIES INC | Haines & Company, Inc. |
| 1995 | Laser Mark It Inc | Pacific Bell |
| 1991 | Laser Mark It | Pacific Bell |
| | Party Pleasers | Pacific Bell |

# FINDINGS

**951 AIR WAY**

| Year | Uses | Source |
|---|---|---|
| 2013 | ELEVENTH HOUR ENTERTAINMENT | Cole Information Services |
| 2008 | DIGITAL PRESS | Cole Information Services |
| 1995 | Express Press | Pacific Bell |
| 1991 | E XPRE S S PRE S S | Pacific Bell |
| | Express Press | Pacific Bell |
| 1985 | Express Words | Pacific Bell |

**1000 AIR WAY**

| Year | Uses | Source |
|---|---|---|
| 2013 | INDOEUROPEAN FOODS | Cole Information Services |
| 2008 | DITTING | Cole Information Services |
| | INDO EUROPEAN FOODS INC | Cole Information Services |
| 2006 | INDO EUROPEAN | Haines Company, Inc. |
| | DITTING USA | Haines Company, Inc. |
| 2001 | INDO EUROPEAN FOODS | Haines & Company, Inc. |
| | DITTING USA | Haines & Company, Inc. |
| 1995 | Indo European Foods | Pacific Bell |
| | Bezjian Imports | Pacific Bell |
| 1991 | Bezjian Imports | Pacific Bell |
| | Bezjian Mesrob & Arda | Pacific Bell |
| | Indo European Foods | Pacific Bell |
| 1980 | SEARS ROEBUCK AND CO APPLIANCE REPAIR SERVICE & PARTS DEPT | Pacific Telephone |
| 1975 | Glendale | Pacific Telephone |
| | Repair Parts | Pacific Telephone |
| 1972 | SEARS CENTRAL SERVICE | R. L. Polk & Co. |
| 1971 | Service Center | Pacific Telephone |
| | Repair Parts | Pacific Telephone |
| | Service Center | Pacific Telephone |
| 1970 | SEARS ROEBUCK SERVICE & PARTS DEPTS GLENDALE APPILANCE & TELEVISION SERVICE | Pacific Telephone |
| | SEARS ROEBUCK SERVICE & PARTS DEPTS GLENDALE APPILANCE & TELEVISION SERVICE | Pacific Telephone |
| 1967 | SEARS ROEBUCK SERVICE & PARTS DEPTS | Pacific Telephone |
| | Repair Parts | Pacific Telephone |
| 1960 | PACIFIC AUTOMATION PRODUCTS INC | Pacific Telephone |
| 1956 | TELE-FIRE OF CALIF INC | Pacific Telephone |

# FINDINGS

| Year | Uses | Source |
|---|---|---|
| 1956 | PAC AUTOMATION PRODUCTS INC | Pacific Telephone |

**1007 AIR WAY**

| Year | Uses | Source |
|---|---|---|
| 1995 | Phase Three Enterprises | Pacific Bell |
| 1975 | Cord Enterprises | Pacific Telephone |
| 1972 | DIGILIN INC DIGITAL READOUT INSTRMNTS | R. L. Polk & Co. |
| 1970 | TEAM PRODUCTS A DIV OF AMERICAN NUCLEONICS CORP | Pacific Telephone |
| | AMERICAN NUCLEONICS CORP | Pacific Telephone |
| | TEAM PRODUCTS A DIV OF AMERICAN NUCLEONICS CORP | Pacific Telephone |
| | AMERICAN NUCLEONICS CORP | Pacific Telephone |
| 1967 | American Nucleonics Corp | Pacific Telephone |
| | Team Products A Div of American Nucleonics Corp | Pacific Telephone |
| 1956 | L A WATER SOFTENER CO INC | Pacific Telephone |
| 1950 | BABB CO INC THE AIRCRAFT SALES | Pacific Telephone |
| | BABB CO INC THE AIRCRAFT SALES | Pacific Telephone |

**1020 AIR WAY**

| Year | Uses | Source |
|---|---|---|
| 2008 | BEZJIAN DYE CHEM INC | Cole Information Services |
| 1980 | SEARS ROEBUCK AND CO PAC COAST TERRITORIAL TECHNICAL TRAINING CENTER | Pacific Telephone |
| 1975 | Pac Coast Territorial Technical Training Center | Pacific Telephone |
| | SEARS ROEBUCK SERVICE & PARTS DEPTS Appliance & Television Service Centers | Pacific Telephone |
| 1972 | SEARS TECHNICAL TRAINING CENTER | R. L. Polk & Co. |
| 1971 | Pacific Coast Territorial Technical Training Center | Pacific Telephone |
| | SEARS ROEBUCK RETAIL STORES Home Cleaning Services Carpets Floors Walls | Pacific Telephone |
| 1970 | SEARS ROEBUCK RETAIL STORES PAC COAST TERRITORIAL TECHNICAL TRAINING CENTER | Pacific Telephone |
| | SEARS ROEBUCK RETAIL STORES PAC COAST TERRITORIAL TECHNICAL TRAINING CENTER | Pacific Telephone |

# FINDINGS

**1021 AIR WAY**

| Year | Uses | Source |
|---|---|---|
| 2008 | SERVE WELL LLC | Cole Information Services |
| | SERVWELL LLC | Cole Information Services |
| | VALLEY CREDIT ACCEPTANCE CORP | Cole Information Services |
| 2006 | SERVEWELL | Haines Company, Inc. |
| | APPLIANCES VALLEY CREDr T | Haines Company, Inc. |
| | ACCEPTANCE CORP | Haines Company, Inc. |
| 2001 | VALLEY CREDIT ACCEPTANCE CORP | Haines & Company, Inc. |
| | SERVWELL CO | Haines & Company, Inc. |
| 1975 | Anderson Braiding & Cabling | Pacific Telephone |
| 1972 | CALIFORNIA SIGN MAINTENANCE | R. L. Polk & Co. |
| 1971 | California SIGN MAINTENANCE CO INC | Pacific Telephone |
| | Schofield & Co | Pacific Telephone |
| 1970 | CALIF SIGN MAINTENANCE CO INC | Pacific Telephone |
| | SCHOFIELD & CO | Pacific Telephone |
| | CALIF SIGN MAINTENANCE CO INC | Pacific Telephone |
| | SCHOFIELD & CO | Pacific Telephone |

**1025 AIR WAY**

| Year | Uses | Source |
|---|---|---|
| 1991 | California Sign Co Inc | Pacific Bell |
| | F romi Los Angelesa Telephones Call | Pacific Bell |
| | California Sliding Door | Pacific Bell |
| | Froni Simi Valley Telephones Call | Pacific Bell |
| | California Sliding Door Repair | Pacific Bell |
| 1985 | California Sign Co Inc | Pacific Bell |
| | From Los Angeles Telephones Call | Pacific Bell |
| 1975 | Niemerow Pharmacies Inc | Pacific Telephone |
| 1972 | INTER-STATE PHOTO SUPPLY-WESTERN | R. L. Polk & Co. |
| 1971 | Interstate Photo Supply Western Corp | Pacific Telephone |
| | Allied Impex A I C Photo | Pacific Telephone |
| 1970 | INTERSTATE PHOTO SUPPLY WESTERN CORP | Pacific Telephone |
| | ALLIED IMPEX A I C PHOTO | Pacific Telephone |
| | INTERSTATE PHOTO SUPPLY WESTERN CORP | Pacific Telephone |
| | ALLIED IMPEX A I C PHOTO | Pacific Telephone |
| 1962 | Trio Tech Inc | Pacific Telephone |

# FINDINGS

**1045 AIR WAY**

| Year | Uses | Source |
|---|---|---|
| 1995 | Biederman A Inc | Pacific Bell |
| | BIE DE RMAN A IN C | Pacific Bell |
| | United Electric Controls Co Inc | Pacific Bell |
| | BIEDERMAN A INC | Pacific Bell |
| 1991 | From BOsna Park Telephones Call | Pacific Bell |
| | United Electric Controls Co Inc | Pacific Bell |
| 1985 | From Buena Park Teephones Call | Pacific Bell |
| | Biederman A & K | Pacific Bell |
| 1980 | I Biederman A Inc | Pacific Telephone |
| | BIEDERMAN A INC | Pacific Telephone |
| | UNITED ELECTRIC CONTROLS CO INC | Pacific Telephone |
| 1975 | BIEDERMAN A INC | Pacific Telephone |
| 1972 | BIEDERMAN A INC AIRCRAFT INSTR REPAIR | R. L. Polk & Co. |
| 1970 | BIEDERMAN A INC PRECISION INSTRUMENT LABS | Pacific Telephone |
| | BIEDERMAN A INC PRECISION INSTRUMENT LABS | Pacific Telephone |
| 1967 | BIEDERMAN A INC PRECISION INSTRUMENT LABS | Pacific Telephone |
| 1964 | BIEDERMAN A INC PRECISION INSTRUMENT LABS | Pacific Telephone |
| 1962 | BIEDERMAN A INC PRECISION INSTRUMENT LABS | Pacific Telephone |
| | BIEDERMAN A INC PRECISION INSTRUMENT LABS | Pacific Telephone |
| 1950 | BIEDERMAN A AIRCRAFT INSTRUMENT SERV | Pacific Telephone |
| | BIEDERMAN A AIRCRAFT INSTRUMENT SERV | Pacific Telephone |

## ALMA

**704 ALMA**

| Year | Uses | Source |
|---|---|---|
| 1995 | RODRIGUEZ RAUDEL | Pacific Bell |

**705 ALMA**

| Year | Uses | Source |
|---|---|---|
| 1924 | AVERILL Leah Mrs h | Los Angeles Directory Co. |

# FINDINGS

**710 ALMA**

| Year | Uses | Source |
|---|---|---|
| 1990 | BRYANT JOHN C & MARCELLA | Pacific Bell |
| 1935 | Kellogg C P r | Los Angeles Directory Co. |
| 1924 | Potts John h | Los Angeles Directory Co. |

**711 ALMA**

| Year | Uses | Source |
|---|---|---|
| 1995 | Noce Adolph | Pacific Bell |
| 1991 | Noce Adolph | Pacific Bell |
| 1985 | Noce Adolph | Pacific Bell |
| 1960 | SINIONRE MICHI DO | R. L. Polk & Co. |
| 1929 | Jackson H F r | Los Angeles Directory Co. |
| 1924 | JACKSON Harry F sec L A & San Pedro Transportation Co Inc h | Los Angeles Directory Co. |
| | Linden Elizabeth Mrs r | Los Angeles Directory Co. |

**713 ALMA**

| Year | Uses | Source |
|---|---|---|
| 1924 | Hanson Wm G h | Los Angeles Directory Co. |

**715 ALMA**

| Year | Uses | Source |
|---|---|---|
| 1995 | Chang Won Yon | Pacific Bell |
| 1991 | Chang Won Yon | Pacific Bell |
| 1975 | Robertson Cecil A | Pacific Telephone |

**719 ALMA**

| Year | Uses | Source |
|---|---|---|
| 1995 | Lord E | Pacific Bell |
| 1991 | Lord G | Pacific Bell |
| | Lord G | Pacific Bell |
| | Lord Emma | Pacific Bell |
| | Lord Eli | Pacific Bell |
| | Lord E | Pacific Bell |
| 1975 | Myers Gerald L | Pacific Telephone |
| 1971 | Myers Gerald L | Pacific Telephone |
| 1967 | Myers Gerald L | Pacific Telephone |
| 1958 | Myers G L | Pacific Telephone |
| 1924 | ABBOTT John D Abbott & Griffin r | Los Angeles Directory Co. |

# FINDINGS

## ALMA LN

### 719 ALMA LN

| Year | Uses | Source |
|---|---|---|
| 1962 | Myers G L | Pacific Telephone |

## ALMA ST

### 711 ALMA ST

| Year | Uses | Source |
|---|---|---|
| 2006 | e NOCEAdolph | Haines Company, Inc. |
| 2001 | NOCE Adolph | Haines & Company, Inc. |
| 1980 | NOCE ADOLPH | Pacific Telephone |
| 1970 | SIMONE MICHAEL D | Pacific Telephone |
| | SIMONE MICHAEL D | Pacific Telephone |
| 1962 | SIMONE MICHAEL D | Pacific Telephone |
| 1956 | SIMONE MICHAEL D | Pacific Telephone |
| 1950 | SIMONE MIKE D R | Pacific Telephone |
| | SIMONE MIKE D R | Pacific Telephone |

### 715 ALMA ST

| Year | Uses | Source |
|---|---|---|
| 2006 | a HUYNH Ngol D | Haines Company, Inc. |
| 2001 | HUYNH Ngoi D | Haines & Company, Inc. |
| 1970 | ROBERTSON CECIL A | Pacific Telephone |
| | ROBERTSON CECIL A | Pacific Telephone |
| 1962 | ROBERTSON CECIL A | Pacific Telephone |
| 1956 | ROBERTSON C A R | Pacific Telephone |
| 1950 | ROBERTSON C A R | Pacific Telephone |
| | ROBERTSON C A R | Pacific Telephone |

### 718 ALMA ST

| Year | Uses | Source |
|---|---|---|
| 1964 | HENZLIK H A SAN PEDRO | Pacific Telephone |

## FLOWER

### 700 FLOWER

| Year | Uses | Source |
|---|---|---|
| 1986 | VISSER RANDOLPH C LAWLER FELIX & HALL ATTYS | Pacific Bell |

# FINDINGS

| Year | Uses | Source |
|---|---|---|
| 1986 | B E H R LEASING & FINANCIAL CORP | Pacific Bell |
| 1981 | PACIFIC ALASKA LNG ASSOCIATES | Pacific Telephone |

**702 FLOWER**

| Year | Uses | Source |
|---|---|---|
| 1940 | Crockett I F | Los Angeles Diretcory Co Publishers |

**705 FLOWER**

| Year | Uses | Source |
|---|---|---|
| 1940 | Dowle Alice Mrs | Los Angeles Diretcory Co Publishers |

**706 FLOWER**

| Year | Uses | Source |
|---|---|---|
| 1940 | Overing C V | Los Angeles Diretcory Co Publishers |

**708 FLOWER**

| Year | Uses | Source |
|---|---|---|
| 1940 | Mc Kernan R I | Los Angeles Diretcory Co Publishers |

**709 FLOWER**

| Year | Uses | Source |
|---|---|---|
| 1940 | Gieszl Ray | Los Angeles Diretcory Co Publishers |
| 1935 | Pollard G H | Los Angeles Directory Company Publisher |

**711 FLOWER**

| Year | Uses | Source |
|---|---|---|
| 1986 | KIMBLE DAVID ILUSTRATR BURBANK | Pacific Bell |
| 1967 | ROBERT MORTON DAHNKEN INC | Pacific Telephone |
| | Dahnken Inc of So California | Pacific Telephone |

**712 FLOWER**

| Year | Uses | Source |
|---|---|---|
| 1940 | Feigley D D | Los Angeles Diretcory Co Publishers |

**713 FLOWER**

| Year | Uses | Source |
|---|---|---|
| 1940 | Smith N E | Los Angeles Diretcory Co Publishers |
| 1935 | Pardoe S J Mrs | Los Angeles Directory Company Publisher |
| | Pardoe T E | Los Angeles Directory Company Publisher |

# FINDINGS

**714 FLOWER**

| Year | Uses | Source |
|---|---|---|
| 1940 | Miller A H | Los Angeles Diretcory Co Publishers |
| | 2 Sides J L | Los Angeles Diretcory Co Publishers |

**715 FLOWER**

| Year | Uses | Source |
|---|---|---|
| 1937 | JOHNSTON & MURPHY SHOES Watherby Kayser Shoe Co Exclusive Agents | Los Angeles Directory Co. |

**717 FLOWER**

| Year | Uses | Source |
|---|---|---|
| 1940 | Fuller E S | Los Angeles Diretcory Co Publishers |
| 1935 | Fuller E S | Los Angeles Directory Company Publisher |

**718 FLOWER**

| Year | Uses | Source |
|---|---|---|
| 1940 | Heuse Clara L | Los Angeles Diretcory Co Publishers |

**719 FLOWER**

| Year | Uses | Source |
|---|---|---|
| 1940 | Turner 0 L | Los Angeles Diretcory Co Publishers |
| 1937 | KIZER Business College E D Kirzer dir | Los Angeles Directory Co. |
| 1935 | Turner 0 L | Los Angeles Directory Company Publisher |

**721 FLOWER**

| Year | Uses | Source |
|---|---|---|
| 1940 | French W H | Los Angeles Diretcory Co Publishers |
| 1935 | French W H | Los Angeles Directory Company Publisher |

**722 FLOWER**

| Year | Uses | Source |
|---|---|---|
| 1940 | Sterhens F V | Los Angeles Diretcory Co Publishers |

**724 FLOWER**

| Year | Uses | Source |
|---|---|---|
| 1940 | Mc Donald J A | Los Angeles Diretcory Co Publishers |

**745 FLOWER**

| Year | Uses | Source |
|---|---|---|
| 1986 | WESTERN UNION PUBLIC SERVICES | Pacific Bell |

# FINDINGS

**748 FLOWER**

| Year | Uses | Source |
|---|---|---|
| 1933 | HALL Nora Mrs cafeteriawkr | Los Angeles Directory Co. |

**751 FLOWER**

| Year | Uses | Source |
|---|---|---|
| 1924 | JONES Gustav cook r | Los Angeles Directory Co. |

**777 FLOWER**

| Year | Uses | Source |
|---|---|---|
| 1995 | Bekins Moving & Storage | Pacific Bell |
| | Bekins Moving & Storage | Pacific Bell |
| | East Burbank | Pacific Bell |
| | BE KIN S CO THE | Pacific Bell |
| | La Crescenta | Pacific Bell |
| | Bekins Moving & Storage | Pacific Bell |
| | Sunland | Pacific Bell |
| | Bekins Moving & Storage | Pacific Bell |
| | Tuiunga | Pacific Bell |
| | Bekins Moving & Storage | Pacific Bell |
| | Executive Offices | Pacific Bell |
| 1986 | BEKINS COMPANY THE GLENDALE | Pacific Bell |
| | BEKINS MOVING & STORAGE HEADQUARTERS GLENDALE | Pacific Bell |
| | BEKINS MOVING & STORAGE GLENDALE | Pacific Bell |
| 1981 | BEKINS COMPANY THE GLENDALE | Pacific Telephone |
| | BEKINS MOVING & STORAGE BEKINS TRANSPORTATION & WAREHOUSING GROUP GLENDA | Pacific Telephone |
| 1967 | ARTCRAFT INDUSTRIES Traid Corp | Pacific Telephone |
| | DIMENSION IV Traid Corp | Pacific Telephone |
| | FOTRON CAMERA Traid Corp | Pacific Telephone |
| | TRAID CORPORATION | Pacific Telephone |

**780 FLOWER**

| Year | Uses | Source |
|---|---|---|
| 1967 | GRAND CENTRAL AIRCRAFT CO | Pacific Telephone |
| | Grand Central Industrial Centre | Pacific Telephone |
| 1962 | Grand Central Industrial Centre | Pacific Telephone |
| | GRAND CENTRAL AIRCRAFT CO | Pacific Telephone |

# FINDINGS

**782 FLOWER**

| Year | Uses | Source |
|---|---|---|
| 1967 | X COTE PRODUCTS Cal National Chemicals Inc | Pacific Telephone |
| | CAL NATIONAL CHEMICALS INC | Pacific Telephone |
| 1924 | Carmean Mary E wid N A Carmean Auto Body Works h | Los Angeles Directory Co. |

**800 FLOWER**

| Year | Uses | Source |
|---|---|---|
| 1967 | Wilson Harrell Co Inc | Pacific Telephone |
| | Tonys Express Inc | Pacific Telephone |
| 1962 | Nebraska Packing Company | Pacific Telephone |
| | Crown Prince Dog Food Co | Pacific Telephone |

**801 FLOWER**

| Year | Uses | Source |
|---|---|---|
| 1940 | music tchr | Los Angeles Diretcory Co Publishers |
| | Eames Marguerite | Los Angeles Diretcory Co Publishers |
| | Carter Estella | Los Angeles Diretcory Co Publishers |
| 1935 | Carter Estella Mrs | Los Angeles Directory Company Publisher |

**804 FLOWER**

| Year | Uses | Source |
|---|---|---|
| 1935 | North C A | Los Angeles Directory Company Publisher |

**805 FLOWER**

| Year | Uses | Source |
|---|---|---|
| 1940 | Cropsey D C Mrs | Los Angeles Diretcory Co Publishers |
| 1935 | Cropsey D C Mrs | Los Angeles Directory Company Publisher |

**806 FLOWER**

| Year | Uses | Source |
|---|---|---|
| 1940 | Cole Claude | Los Angeles Diretcory Co Publishers |

**810 FLOWER**

| Year | Uses | Source |
|---|---|---|
| 1940 | Howlett Minnie | Los Angeles Diretcory Co Publishers |

**811 FLOWER**

| Year | Uses | Source |
|---|---|---|
| 1940 | Heberger V E | Los Angeles Diretcory Co Publishers |

# FINDINGS

| Year | Uses | Source |
|---|---|---|
| 1935 | Heberger V E | Los Angeles Directory Company Publisher |

**812 FLOWER**

| Year | Uses | Source |
|---|---|---|
| 1940 | Hahn M M Mrs | Los Angeles Diretcory Co Publishers |
| | Brunner Letitia | Los Angeles Diretcory Co Publishers |
| 1935 | Hahn M M Mrs | Los Angeles Directory Company Publisher |
| | Brunner Jacob | Los Angeles Directory Company Publisher |

**818 FLOWER**

| Year | Uses | Source |
|---|---|---|
| 1940 | Beard Bessie Mrs | Los Angeles Diretcory Co Publishers |
| 1935 | B 3rewer J T | Los Angeles Directory Company Publisher |

**819 FLOWER**

| Year | Uses | Source |
|---|---|---|
| 1940 | Mavila Alex | Los Angeles Diretcory Co Publishers |
| | De Jong Jake | Los Angeles Diretcory Co Publishers |
| 1937 | BROCK Jas H floormn J W Robinson Co | Los Angeles Directory Co. |
| 1935 | Ransom R | Los Angeles Directory Company Publisher |
| | Beatty V T | Los Angeles Directory Company Publisher |

**820 FLOWER**

| Year | Uses | Source |
|---|---|---|
| 1940 | Nordstrom F H | Los Angeles Diretcory Co Publishers |
| | Vacant | Los Angeles Diretcory Co Publishers |
| 1935 | Nordstrom F H | Los Angeles Directory Company Publisher |

**821 FLOWER**

| Year | Uses | Source |
|---|---|---|
| 1940 | Humphrey E D | Los Angeles Diretcory Co Publishers |
| 1935 | Grove W A | Los Angeles Directory Company Publisher |

**826 FLOWER**

| Year | Uses | Source |
|---|---|---|
| 1940 | Fitzgerald Henry | Los Angeles Diretcory Co Publishers |
| 1935 | Fitzgerald Henry | Los Angeles Directory Company Publisher |

**827 FLOWER**

| Year | Uses | Source |
|---|---|---|
| 1940 | Fricks T C | Los Angeles Diretcory Co Publishers |

| Year | Uses | Source |
|---|---|---|
| 1940 | Gee Allen | Los Angeles Diretcory Co Publishers |
| 1935 | Fricks T C | Los Angeles Directory Company Publisher |

**829 FLOWER**

| Year | Uses | Source |
|---|---|---|
| 1940 | Fugle M P | Los Angeles Diretcory Co Publishers |
| 1935 | Vacant | Los Angeles Directory Company Publisher |
| | Helsten A F | Los Angeles Directory Company Publisher |

**830 FLOWER**

| Year | Uses | Source |
|---|---|---|
| 1940 | Stewart Joel | Los Angeles Diretcory Co Publishers |
| 1935 | Frantz J J | Los Angeles Directory Company Publisher |
| 1924 | HARRIS Stella F clk h | Los Angeles Directory Co. |

**832 FLOWER**

| Year | Uses | Source |
|---|---|---|
| 1940 | Briggs G C | Los Angeles Diretcory Co Publishers |
| 1935 | LHeureux D E | Los Angeles Directory Company Publisher |

**833 FLOWER**

| Year | Uses | Source |
|---|---|---|
| 1937 | Covell D R Mrs exec sec Midnight Mission | Los Angeles Directory Co. |
| 1929 | Bonen Mary buyer Newcomb Corset House | Los Angeles Directory Co. |

## FLOWER BLDG

**700 FLOWER BLDG**

| Year | Uses | Source |
|---|---|---|
| 1986 | PLAZA DEVELOPMENT ASSOCIATES | Pacific Bell |
| 1981 | BROADWAY PLAZA | Pacific Telephone |

## FLOWER GLN

**782 FLOWER GLN**

| Year | Uses | Source |
|---|---|---|
| 1967 | JUDSON PERKINS ORGANIZATION | Pacific Telephone |

# FINDINGS

## FLOWER ST

### 711 FLOWER ST

| Year | Uses | Source |
|---|---|---|
| 2001 | XXXX | Haines & Company, Inc. |
| 1972 | DAHNKEN INC JEWELRY | R. L. Polk & Co. |

### 777 FLOWER ST

| Year | Uses | Source |
|---|---|---|
| 2008 | LAKESIDE HEALTHCARE INC | Cole Information Services |
| | KEYSTONE LAKESIDE | Cole Information Services |
| | LAKESIDE MEDICAL GROUP INC | Cole Information Services |
| 2006 | LAKESIDE MEDICAL | Haines  Company, Inc. |
| | GROUP | Haines  Company, Inc. |
| 2001 | LAKESIDE MEDICAL GROUP | Haines & Company, Inc. |
| | LAKESIDE HEALTH SERVICE INC | Haines & Company, Inc. |
| 1972 | BEKINS MOVING & STORAGE CO SERV | R. L. Polk & Co. |
| 1970 | ARTCRAFT INDUSTRIES TRAID CORPORATION | Pacific Telephone |
| | TRAID CORPORATION | Pacific Telephone |
| 1967 | TRAID CORP PHOTO EQUIP DLRS | R. L. Polk & Co. |
| 1966 | ARTCRAFT INDUSTRIES TRAID CORPORATION | Pacific Telephone |
| | DIMENSION IV TRALD CORPORATION | Pacific Telephone |
| | FOTRON CAMNERA TRAID CORPORATION | Pacific Telephone |
| | TRAID CORPORATION | Pacific Telephone |

### 780 FLOWER ST

| Year | Uses | Source |
|---|---|---|
| 2008 | ENVIRONMENTAL MANAGEMENT CENTER | Cole Information Services |
| | CITY OF GLENDALE | Cole Information Services |
| 1972 | HYLAND LABORATORIES | R. L. Polk & Co. |
| 1967 | GRAND CENTRAL INDUSTRIAL CENTRE LEASING INDUSTRIAL SITES | R. L. Polk & Co. |
| | GRAND CENTRAL AIRCRAFT CO AIRCRAFT ENG OVERHAUL | R. L. Polk & Co. |

### 782 FLOWER ST

| Year | Uses | Source |
|---|---|---|
| 2001 | XXXX | Haines & Company, Inc. |
| 1972 | ME GAW LABORATORIES LABY | R. L. Polk & Co. |

| Year | Uses | Source |
|---|---|---|
| 1967 | GAL-NATIONAL CHEMICALS INC | R. L. Polk & Co. |
| | JUDSON-PERKINS ORGANIZATION PLDG CONTRS | R. L. Polk & Co. |

**800 FLOWER ST**

| Year | Uses | Source |
|---|---|---|
| 2013 | C DM ENGINEERS & CONSTRUCTORS INC | Cole Information Services |
| 2008 | RECYCLE AMERICA | Cole Information Services |
| | C D M CONSTRUCTORS INC | Cole Information Services |
| 2006 | CONSTRUCTORS | Haines Company, Inc. |
| | CDM ENGINEERS& | Haines Company, Inc. |
| 2001 | GLENDL RECYCLING CENTER | Haines & Company, Inc. |
| | PCI | Haines & Company, Inc. |
| 1980 | ORTH VAN AND STORAGE INC FLOWER ST GLENDALE | Pacific Telephone |
| | MAYFLOWER LONG DISTANCE MOVING FLOWER ST GLENDALE | Pacific Telephone |
| | MAYFLOWER-AERO LONG DISTANCE SALES OFC FLOWER ST GLENDALE | Pacific Telephone |
| | CALIFORNIA-MAYFLOWER MOVING & STORAGE FLOWER ST GLENDALE | Pacific Telephone |
| | AERO-MA YEL OWER LONG DISTANCE MOVING AGENCY FLOWER ST GLENDALE | Pacific Telephone |
| 1972 | TECHNICAL OIL TOOL CORP (WHSO) | R. L. Polk & Co. |
| 1967 | TONY S EXPRESS TRUCKING | R. L. Polk & Co. |

**805 FLOWER ST**

| Year | Uses | Source |
|---|---|---|
| 2001 | XXXX | Haines & Company, Inc. |

## FLOWER ST N

**702 FLOWER ST N**

| Year | Uses | Source |
|---|---|---|
| 1960 | ERPITO NICK | Pacific Telephone and Telegraph Company |

**705 FLOWER ST N**

| Year | Uses | Source |
|---|---|---|
| 1960 | JACOBSON L M | Pacific Telephone and Telegraph Company |

# FINDINGS

**706 FLOWER ST N**

| Year | Uses | Source |
|---|---|---|
| 1960 | SOUKUP J E | Pacific Telephone and Telegraph Company |
| | 1/2 DIX ADA P | Pacific Telephone and Telegraph Company |

**708 FLOWER ST N**

| Year | Uses | Source |
|---|---|---|
| 1960 | 1/ LAWRENCE P | Pacific Telephone and Telegraph Company |
| | SCHWARZMAN RICHARD C | Pacific Telephone and Telegraph Company |
| | APARTMENTS | Pacific Telephone and Telegraph Company |

**712 FLOWER ST N**

| Year | Uses | Source |
|---|---|---|
| 1960 | VOTTERO CHRIS D | Pacific Telephone and Telegraph Company |

**713 FLOWER ST N**

| Year | Uses | Source |
|---|---|---|
| 1960 | PRIEST MARY A MRS | Pacific Telephone and Telegraph Company |
| | APARTMENTS | Pacific Telephone and Telegraph Company |
| | PRIEST DONALD L | Pacific Telephone and Telegraph Company |
| | PRIEST L F | Pacific Telephone and Telegraph Company |

**714 FLOWER ST N**

| Year | Uses | Source |
|---|---|---|
| 1960 | CLIFFGARD A C | Pacific Telephone and Telegraph Company |

**717 FLOWER ST N**

| Year | Uses | Source |
|---|---|---|
| 1960 | FULLER BERTHA H | Pacific Telephone and Telegraph Company |

**718 FLOWER ST N**

| Year | Uses | Source |
|---|---|---|
| 1960 | RERG S or | Pacific Telephone and Telegraph Company |
| | MOORE EDITH M | Pacific Telephone and Telegraph Company |
| | APARTMENTS | Pacific Telephone and Telegraph Company |
| | BLOCK A P | Pacific Telephone and Telegraph Company |

**719 FLOWER ST N**

| Year | Uses | Source |
|---|---|---|
| 1960 | GOMEN DARLENE | Pacific Telephone and Telegraph Company |
| | ROWAN JAS J | Pacific Telephone and Telegraph Company |
| | DEERING CHAS ROBT | Pacific Telephone and Telegraph Company |

# FINDINGS

| Year | Uses | Source |
|---|---|---|
| 1960 | JORGENSEN VICTOR W | Pacific Telephone and Telegraph Company |
| | APARTMENTS | Pacific Telephone and Telegraph Company |

**721 FLOWER ST N**

| Year | Uses | Source |
|---|---|---|
| 1960 | FRENCH W H | Pacific Telephone and Telegraph Company |

**722 FLOWER ST N**

| Year | Uses | Source |
|---|---|---|
| 1960 | TERNQUIST E C | Pacific Telephone and Telegraph Company |
| | MENDIOLA ANTONIO | Pacific Telephone and Telegraph Company |
| | HARDEN MARY V | Pacific Telephone and Telegraph Company |
| | BARGAR EMILY | Pacific Telephone and Telegraph Company |
| | APARTMENTS | Pacific Telephone and Telegraph Company |

**724 FLOWER ST N**

| Year | Uses | Source |
|---|---|---|
| 1960 | GORMAN ARTHUR L | Pacific Telephone and Telegraph Company |

**727 FLOWER ST N**

| Year | Uses | Source |
|---|---|---|
| 1960 | ARDNOT JACQUELINE | Pacific Telephone and Telegraph Company |

**801 FLOWER ST N**

| Year | Uses | Source |
|---|---|---|
| 1960 | KENT W H | Pacific Telephone and Telegraph Company |

**805 FLOWER ST N**

| Year | Uses | Source |
|---|---|---|
| 1960 | APARTMENTS | Pacific Telephone and Telegraph Company |
| | BURCHIERE ALFRED | Pacific Telephone and Telegraph Company |
| | POULTER ORVAL G | Pacific Telephone and Telegraph Company |
| | BECK J K | Pacific Telephone and Telegraph Company |

**806 FLOWER ST N**

| Year | Uses | Source |
|---|---|---|
| 1960 | TURNER JOHNNIE L | Pacific Telephone and Telegraph Company |
| | COLE C | Pacific Telephone and Telegraph Company |
| | APARTMENTS | Pacific Telephone and Telegraph Company |

# FINDINGS

**810 FLOWER ST N**

| Year | Uses | Source |
|---|---|---|
| 1960 | MITCHELL JOS L | Pacific Telephone and Telegraph Company |

**811 FLOWER ST N**

| Year | Uses | Source |
|---|---|---|
| 1960 | PATERA A F | Pacific Telephone and Telegraph Company |

**815 FLOWER ST N**

| Year | Uses | Source |
|---|---|---|
| 1960 | APARTMENTS | Pacific Telephone and Telegraph Company |
| | SINGLEY CHESTER | Pacific Telephone and Telegraph Company |
| | WALSH ALFRED E | Pacific Telephone and Telegraph Company |

**818 FLOWER ST N**

| Year | Uses | Source |
|---|---|---|
| 1960 | BRAND EUGENE J | Pacific Telephone and Telegraph Company |
| | BRAND EUGENE J | Pacific Telephone and Telegraph Company |

**820 FLOWER ST N**

| Year | Uses | Source |
|---|---|---|
| 1960 | 1/2 HOLTZMAN WIN | Pacific Telephone and Telegraph Company |
| | VENABLES GILBERT | Pacific Telephone and Telegraph Company |

**821 FLOWER ST N**

| Year | Uses | Source |
|---|---|---|
| 1960 | HARGESHEIMER OSCAR E | Pacific Telephone and Telegraph Company |
| | 1/2 APARTMENTS | Pacific Telephone and Telegraph Company |
| | JIOVENFTTA JOE or | Pacific Telephone and Telegraph Company |
| | STEINER JOHN S | Pacific Telephone and Telegraph Company |
| | ROGERS JAS | Pacific Telephone and Telegraph Company |

**826 FLOWER ST N**

| Year | Uses | Source |
|---|---|---|
| 1960 | FITZGERALD M | Pacific Telephone and Telegraph Company |

**827 FLOWER ST N**

| Year | Uses | Source |
|---|---|---|
| 1960 | BATH W K | Pacific Telephone and Telegraph Company |

**830 FLOWER ST N**

| Year | Uses | Source |
|---|---|---|
| 1960 | RODRIGUEZ RICHARD C | Pacific Telephone and Telegraph Company |

**832 FLOWER ST N**

| Year | Uses | Source |
|---|---|---|
| 1960 | BRIGGS GLEN C | Pacific Telephone and Telegraph Company |

## FLOWER ST S

**700 FLOWER ST S**

| Year | Uses | Source |
|---|---|---|
| 1970 | U 0 P WATER SERVICES DIV WATER | R. L. Polk & Co. |

**711 FLOWER ST S**

| Year | Uses | Source |
|---|---|---|
| 1970 | I A M LASER INDUSTRIES ELECTRO-OPTICS | R. L. Polk & Co. |

**727 FLOWER ST S**

| Year | Uses | Source |
|---|---|---|
| 1970 | B & B MFG CO MACH SHOP | R. L. Polk & Co. |

**800 FLOWER ST S**

| Year | Uses | Source |
|---|---|---|
| 1970 | HANSEN LYNN CO-DIVISION OF SARGENT INDUSTRIES AIRCRAFT CONTROLS MFG | R. L. Polk & Co. |

**801 FLOWER ST S**

| Year | Uses | Source |
|---|---|---|
| 1970 | CUSTOM ROOFS INC CONTRS | R. L. Polk & Co. |

**825 FLOWER ST S**

| Year | Uses | Source |
|---|---|---|
| 1970 | VACANT | R. L. Polk & Co. |

## GRAND CENTRAL

**1024 GRAND CENTRAL**

| Year | Uses | Source |
|---|---|---|
| 1990 | DELSEN TESTING LABORATORIES INC | Pacific Bell |
| 1986 | DELSEN TESTING LABORATORIES INC | Pacific Bell |

# FINDINGS

## GRAND CENTRAL AVE

### 900 GRAND CENTRAL AVE

| Year | Uses | Source |
|---|---|---|
| 2008 | STUDIO CITY RENTALS | Cole Information Services |
| 2006 | COMPANY | Haines Company, Inc. |
| | ANIMATIONS | Haines Company, Inc. |
| | ANIMATED | Haines Company, Inc. |
| 1995 | Pacific Title Archives | Pacific Bell |
| 1972 | TRAID CORP PHOTO EQUIP DIRS | R. L. Polk & Co. |
| 1971 | Traid Corporation | Pacific Telephone |
| | PHOTO INSTRUMENTATION Traid Corporation | Pacific Telephone |
| | Consumer Products Division Fotron Camera Traid Corporation | Pacific Telephone |

### 907 GRAND CENTRAL AVE

| Year | Uses | Source |
|---|---|---|
| 1960 | TURNBULL FREDERICK | Pacific Telephone |

### 910 GRAND CENTRAL AVE

| Year | Uses | Source |
|---|---|---|
| 2001 | XXXX | Haines & Company, Inc. |
| 1980 | BEKINS TRANSPORTATION & WAREHOUSING GROUP | Pacific Telephone |
| 1976 | Bekins Distribution Services | Pacific Telephone |
| 1975 | Executive Offices | Pacific Telephone |

### 932 GRAND CENTRAL AVE

| Year | Uses | Source |
|---|---|---|
| 2013 | MEDICAL RESOURCES MANAGEMENT | Cole Information Services |
| 2008 | MEDICAL RESOURCES MANAGEMENT | Cole Information Services |
| | EMERGENT GROUP INC | Cole Information Services |
| 2006 | MEDICAL | Haines Company, Inc. |
| | RESOURCES | Haines Company, Inc. |
| | MANAGEMENT PRI MEDICAL | Haines Company, Inc. |
| | TECHNOLOGY INC | Haines Company, Inc. |
| 2001 | PRI PHYSIOLOGIC REPS INC | Haines & Company, Inc. |
| 1991 | From Lose Angeles Telephones Ca | Pacific Bell |
| | Isoo Vac Engineering Inc | Pacific Bell |
| 1990 | ISO VAC ENGINEERING INC GLENDALE | Pacific Bell |

# FINDINGS

| Year | Uses | Source |
|---|---|---|
| 1986 | ISO VAC ENGINEERING INC GLENDALE | Pacific Bell |
| 1985 | Iso Vac Engineering Inc | Pacific Bell |
| | From Los Angeles Telephones Call | Pacific Bell |
| 1981 | ISOVAC ENGINEERING INC GLENDALE | Pacific Telephone |
| 1980 | ISO VAC ENGINEERING INC | Pacific Telephone |
| 1975 | Bero Industries | Pacific Telephone |
| 1972 | JET LUBE INC LUBRICANT MFRS | R. L. Polk & Co. |
| 1971 | Jet Lube Inc | Pacific Telephone |
| 1970 | SIERRA LUBRICANTS | Pacific Telephone |
| | JET-LUBE INC | Pacific Telephone |
| | JET-LUBE INC | Pacific Telephone |
| | SIERRA LUBRICANTS | Pacific Telephone |
| 1967 | Jet Lube Inc | Pacific Telephone |
| | JET LUBE INC LUBRICANT MFRS | R. L. Polk & Co. |

**1011 GRAND CENTRAL AVE**

| Year | Uses | Source |
|---|---|---|
| 2008 | STATE OF CA DEPT OF TRANSPORTATION | Cole Information Services |
| | CITY OF GLENDALE | Cole Information Services |
| 2001 | XXXX | Haines & Company, Inc. |
| 1995 | Grand Central Business Center | Pacific Bell |
| 1991 | Micro Sys | Pacific Bell |
| 1990 | MICRO-SYS INC GLENDALE | Pacific Bell |
| 1986 | MICRO SYS INC GLENDALE | Pacific Bell |
| 1981 | SINGER COMPANY THE LOS ANGELES | Pacific Telephone |
| 1980 | MURPHY JAS SLS REP | Pacific Telephone |
| | SINGER COMPANY THE INDUSTRIAL PRODUCTS DIV | Pacific Telephone |
| 1976 | SINGER COMPANY THE Industrial Products Division | Pacific Telephone |
| 1972 | SINGER CO THE (INDUSTRIAL PRODUCTS | R. L. Polk & Co. |
| 1971 | SINGER COMPANY THE Sewing Centers Industrial Products Division | Pacific Telephone |

**1014 GRAND CENTRAL AVE**

| Year | Uses | Source |
|---|---|---|
| 2001 | XXXX | Haines & Company, Inc. |
| 1995 | Applied Data Services Inc | Pacific Bell |

# FINDINGS

| Year | Uses | Source |
|---|---|---|
| 1995 | Risk Management System | Pacific Bell |
| 1990 | A G F A-GEVAERT INC METACOMET DIV GLENDALE | Pacific Bell |
| 1986 | METACOMET INCORPORATED GLENDALE | Pacific Bell |
| 1985 | Metacomet Incorporated | Pacific Bell |
| 1981 | METACOMET INCORPORATED GLENDALE | Pacific Telephone |
| 1980 | METACOMET INCORPORATED | Pacific Telephone |
| 1976 | Metacomet Incorporated | Pacific Telephone |
| 1972 | METACOMET INC PHOTOGRAPHIC CHEM | R. L. Polk & Co. |
| 1971 | Agfa Gevaert Inc Technical Service Division | Pacific Telephone |
| | Metacomet Incorporated | Pacific Telephone |
| 1970 | MAIDENFORM INC BRASLERS | Pacific Telephone |
| | METACOMET INCORPORATED | Pacific Telephone |
| | MAIDENFORM INC BRASLERS | Pacific Telephone |
| | METACOMET INCORPORATED | Pacific Telephone |
| 1967 | MAIDENFORM INC brasiers | Pacific Telephone |
| | MAIDENFORM INC UNDERWEAR | R. L. Polk & Co. |

**1024 GRAND CENTRAL AVE**

| Year | Uses | Source |
|---|---|---|
| 2008 | DELSEN TESTING LABORATORIES | Cole Information Services |
| 2001 | XXXX | Haines & Company, Inc. |

**1025 GRAND CENTRAL AVE**

| Year | Uses | Source |
|---|---|---|
| 1985 | Weatherite | Pacific Bell |
| | Weatherite Service Co | Pacific Bell |
| 1980 | AGFA-GEVAERT INC | Pacific Telephone |
| 1976 | AGFA GEVAERT INC | Pacific Telephone |
| 1971 | AGFA GEVAERT INC | Pacific Telephone |
| 1970 | AGFA-GEVAERT INC | Pacific Telephone |
| | AGFA-GEVAERT INC | Pacific Telephone |
| 1967 | AGFA-GEVAERT INC PHOTO EQUIP & SUP | R. L. Polk & Co. |

# FINDINGS

## GRAYNOLD AVE

### 820 GRAYNOLD AVE

| Year | Uses | Source |
|---|---|---|
| 1980 | PACE S A GLENDALE | Pacific Telephone |
| 1972 | SMALL DORIS MRS | R. L. Polk & Co. |
| 1960 | SMALL DORIS MRS | R. L. Polk & Co. |
| 1955 | SMALL DORIS MRS | R. L. Polk & Co. |
| 1951 | CIOLSWSR DI 8 | R. L. Polk & Co. |

### 823 GRAYNOLD AVE

| Year | Uses | Source |
|---|---|---|
| 1972 | WILLIAMSON ALEX | R. L. Polk & Co. |
| 1960 | WILLIAMSON ALEX | R. L. Polk & Co. |
| 1955 | WILLIAMSON ALEX | R. L. Polk & Co. |
| 1951 | VACANT | R. L. Polk & Co. |
| 1940 | F H RANDALL | Glendale Directory Co. |

### 825 GRAYNOLD AVE

| Year | Uses | Source |
|---|---|---|
| 1972 | WATSON MARGT C MRS | R. L. Polk & Co. |
| 1960 | SANDAY ROBT | R. L. Polk & Co. |
| 1955 | SANDAY ROBT | R. L. Polk & Co. |
| 1951 | SANADFY 1OHBT | R. L. Polk & Co. |
| 1940 | H R HARDING | Glendale Directory Co. |

## GRAYNOLD AVE N

### 820 GRAYNOLD AVE N

| Year | Uses | Source |
|---|---|---|
| 1945 | FLORENCE E MCKEE | The Glendale Directory Co. |

### 823 GRAYNOLD AVE N

| Year | Uses | Source |
|---|---|---|
| 1945 | R E SCHLENSKER | The Glendale Directory Co. |

### 825 GRAYNOLD AVE N

| Year | Uses | Source |
|---|---|---|
| 1945 | G R BRADBURY | The Glendale Directory Co. |

## N NORTON AVE

### 804 N NORTON AVE

| Year | Uses | Source |
|---|---|---|
| 1980 | BOND L C | Pacific Telephone |
| | SHULTZ GRANT | Pacific Telephone |
| | SMALLWOOD M M | Pacific Telephone |
| | TAYLOR N L | Pacific Telephone |
| 1970 | DRAKE FRANCES L | Pacific Telephone |
| | KYSAR J S | Pacific Telephone |
| | MCDONOUGH ROBT GLENDALE | Pacific Telephone |
| | MCDONOUGH ROBT GLENDALE | Pacific Telephone |
| | DRAKE FRANCES L | Pacific Telephone |
| | KYSAR J S | Pacific Telephone |

### 810 N NORTON AVE

| Year | Uses | Source |
|---|---|---|
| 1980 | MAHLER DAVID | Pacific Telephone |
| | MCDONALD D | Pacific Telephone |
| | GREENLEE JEAN | Pacific Telephone |
| | HOHENSTEIN P J | Pacific Telephone |
| 1970 | BRAYTON JAS J | Pacific Telephone |
| | HART ALAN | Pacific Telephone |
| | POWELL ERNEST J | Pacific Telephone |
| | QUERIDO J | Pacific Telephone |
| | BRAYTON JAS J | Pacific Telephone |
| | HART ALAN | Pacific Telephone |
| | POWELL ERNEST J | Pacific Telephone |
| | QUERIDO J | Pacific Telephone |
| 1962 | JACOBS FRAN | Pacific Telephone |
| | JACOBS RICHARD W | Pacific Telephone |
| | PARKER PATRICK L | Pacific Telephone |
| 1956 | HENRY CLAUDE L | Pacific Telephone |
| 1950 | ISBELL R P R | Pacific Telephone |
| | ISBELL R P R | Pacific Telephone |
| 1942 | Van Laven Grace Mrs | Los Angeles Directory Co. |

### 814 N NORTON AVE

| Year | Uses | Source |
|---|---|---|
| 1980 | PIERLOT JOHN L | Pacific Telephone |

# FINDINGS

| Year | Uses | Source |
|---|---|---|
| 1970 | PIERLOT JOHN L | Pacific Telephone |
| | PIERLOT JOHN L | Pacific Telephone |
| 1962 | PIERLOT JOHN L | Pacific Telephone |
| | SIMPSON RUBE | Pacific Telephone |
| 1956 | PIERLOT JOHN L | Pacific Telephone |
| | SIMPSON RUBE | Pacific Telephone |
| 1950 | BRUSH BRADFORD F R | Pacific Telephone |
| | BRUSH BRADFORD F R | Pacific Telephone |

**815 N NORTON AVE**

| Year | Uses | Source |
|---|---|---|
| 1980 | STEWART DONALD D | Pacific Telephone |
| | STEWART DONALD D | Pacific Telephone |
| 1970 | STEWART DONALD D | Pacific Telephone |
| | STEWART DONALD D | Pacific Telephone |
| 1962 | SANABRAIS JOSE B | Pacific Telephone |
| 1956 | WISMER HENRY D | Pacific Telephone |
| 1950 | BARNETT RUIE J R | Pacific Telephone |
| | BARNETT RUIE J R | Pacific Telephone |

**818 N NORTON AVE**

| Year | Uses | Source |
|---|---|---|
| 1991 | Mkrtchian Gulnara | Pacific Bell |
| 1980 | WILLIS EDNA | Pacific Telephone |
| 1970 | WILLIS EDNA | Pacific Telephone |
| | WILLIS EDNA | Pacific Telephone |
| 1962 | NEUMANN GARETH WM | Pacific Telephone |
| 1956 | GARDNER J ROY | Pacific Telephone |
| 1950 | KNOWLES VIRGINIA R | Pacific Telephone |
| | KNOWLES VIRGINIA R | Pacific Telephone |

**821 N NORTON AVE**

| Year | Uses | Source |
|---|---|---|
| 1937 | CHRISTY Harry G Ruth office mgr Burroughs Adding Mach Co | Los Angeles Directory Co. |

**822 N NORTON AVE**

| Year | Uses | Source |
|---|---|---|
| 1980 | PREHODA LUDWIG C | Pacific Telephone |
| 1962 | PREHODA LUDWIG C | Pacific Telephone |

# FINDINGS

| Year | Uses | Source |
|---|---|---|
| 1956 | PREHODA LUDWIG C | Pacific Telephone |
| 1950 | KLEIST PHERN R | Pacific Telephone |
| | KLEIST PHERN R | Pacific Telephone |

**823 N NORTON AVE**

| Year | Uses | Source |
|---|---|---|
| 1980 | CHRISTOPHERSEN F E | Pacific Telephone |
| 1970 | REIMEL ADA L | Pacific Telephone |
| | REIMEL ADA L | Pacific Telephone |
| 1962 | BRYANT HAROLD S | Pacific Telephone |
| 1956 | GRIMAN HELEN | Pacific Telephone |
| 1950 | SEYMOUR EDW W R | Pacific Telephone |
| | SEYMOUR EDW W R | Pacific Telephone |

**825 N NORTON AVE**

| Year | Uses | Source |
|---|---|---|
| 1980 | FLETCHER H R | Pacific Telephone |
| 1970 | CHRISTOPHERSEN FLORENCE MRS | Pacific Telephone |
| | CHRISTOPHERSEN FLORENCE MRS | Pacific Telephone |
| 1962 | BRENN EDNA B | Pacific Telephone |
| 1956 | SEYMOUR MAE F MRS | Pacific Telephone |
| 1950 | SEYMOUR MAE F MRS R | Pacific Telephone |
| | SEYMOUR MAE F MRS R | Pacific Telephone |

**826 N NORTON AVE**

| Year | Uses | Source |
|---|---|---|
| 1980 | SAMSON PAULINE I | Pacific Telephone |
| 1970 | SAMSON PAULINE I | Pacific Telephone |
| | SAMSON PAULINE I | Pacific Telephone |
| 1962 | SAMSON PAULINE I | Pacific Telephone |
| 1956 | SAMSON PAULINE I | Pacific Telephone |

**827 N NORTON AVE**

| Year | Uses | Source |
|---|---|---|
| 1980 | GLENN W E | Pacific Telephone |
| 1970 | GLENN W E | Pacific Telephone |
| | GLENN W E | Pacific Telephone |
| 1962 | GLENN W E | Pacific Telephone |
| 1956 | GOFF STANLEY D R | Pacific Telephone |
| 1950 | GOFF STANLEY D R | Pacific Telephone |

# FINDINGS

| Year | Uses | Source |
|---|---|---|
| 1950 | GOFF STANLEY D R | Pacific Telephone |

**830 N NORTON AVE**

| Year | Uses | Source |
|---|---|---|
| 1970 | BANKS LINDA R | Pacific Telephone |
| | BAKER JOHN I | Pacific Telephone |
| | BANKS LINDA R | Pacific Telephone |
| | BAKER JOHN I | Pacific Telephone |
| 1962 | BAKER JOHN I | Pacific Telephone |
| 1956 | BAKER JOHN I R | Pacific Telephone |
| 1950 | BAKER JOHN I R | Pacific Telephone |
| | BAKER JOHN I R | Pacific Telephone |

**831 N NORTON AVE**

| Year | Uses | Source |
|---|---|---|
| 1980 | STRAUBE EVELYN E | Pacific Telephone |
| | DODDS RUTH E | Pacific Telephone |
| 1962 | DODDS RUTH E | Pacific Telephone |
| 1956 | DODDS RUTH E R | Pacific Telephone |
| 1950 | DODDS RUTH E R | Pacific Telephone |
| | DODDS RUTH E R | Pacific Telephone |

**834 N NORTON AVE**

| Year | Uses | Source |
|---|---|---|
| 1980 | SNYDER JOHN C | Pacific Telephone |
| 1962 | CARR GARY S | Pacific Telephone |
| 1956 | CONFREY JAS H | Pacific Telephone |
| 1950 | MURPHY R H R | Pacific Telephone |
| | MURPHY R H R | Pacific Telephone |

**835 N NORTON AVE**

| Year | Uses | Source |
|---|---|---|
| 1970 | LE CHEMINANT KENNETH | Pacific Telephone |
| | LE CHEMINANT KENNETH | Pacific Telephone |
| 1962 | WITT WALTER T | Pacific Telephone |
| 1956 | WITT WALTER T | Pacific Telephone |
| 1950 | WITT WALTER T R | Pacific Telephone |
| | WITT WALTER T R | Pacific Telephone |

# FINDINGS

**838 N NORTON AVE**

| Year | Uses | Source |
|---|---|---|
| 1980 | MORROW CARL L | Pacific Telephone |
| 1970 | MORROW CARL L | Pacific Telephone |
| | MORROW CARL L | Pacific Telephone |
| 1956 | MORROW CARL L R | Pacific Telephone |
| 1950 | MORROW CARL L R | Pacific Telephone |
| | MORROW CARL L R | Pacific Telephone |

**839 N NORTON AVE**

| Year | Uses | Source |
|---|---|---|
| 1980 | SCHRAGE JAS | Pacific Telephone |
| 1970 | SCHRAGE JAS | Pacific Telephone |
| | SCHRAGE JAS | Pacific Telephone |
| 1962 | SCHRAGE JAS | Pacific Telephone |
| 1956 | HENRY ERNEST A JR | Pacific Telephone |
| 1950 | FISBACK CARL E R | Pacific Telephone |
| | FISBACK CARL E R | Pacific Telephone |

**842 N NORTON AVE**

| Year | Uses | Source |
|---|---|---|
| 1980 | DEARTH PAUL | Pacific Telephone |
| 1970 | DEARTH PAUL | Pacific Telephone |
| | DEARTH PAUL | Pacific Telephone |
| 1962 | DEARTH PAUL | Pacific Telephone |
| 1956 | CUNNINGHAM VERA K | Pacific Telephone |
| 1950 | CUNNINGHAM VERA K MRS R | Pacific Telephone |
| | CUNNINGHAM VERA K MRS R | Pacific Telephone |

**843 N NORTON AVE**

| Year | Uses | Source |
|---|---|---|
| 1980 | TRIPOLINO ANTHONY | Pacific Telephone |
| 1970 | TRIPOLINO ANTHONY | Pacific Telephone |
| | TRIPOLINO ANTHONY | Pacific Telephone |
| | TRIPOLINO LINDA | Pacific Telephone |
| | TRIPOLINO LINDA | Pacific Telephone |
| 1962 | TRIPOLINO ANTHONY | Pacific Telephone |
| 1956 | TRIPOLINO ANTHONY | Pacific Telephone |
| 1950 | PLUMMER JEANETTE R | Pacific Telephone |
| | PLUMMER JEANETTE R | Pacific Telephone |

# FINDINGS

**846 N NORTON AVE**

| Year | Uses | Source |
|---|---|---|
| 1980 | CARBONE FRANK J GLENDALE | Pacific Telephone |
| 1970 | CRANK CURTIS | Pacific Telephone |
| | CRANK CURTIS | Pacific Telephone |
| 1962 | CRANK CURTIS | Pacific Telephone |
| 1956 | CRANK CURTIS | Pacific Telephone |

**847 N NORTON AVE**

| Year | Uses | Source |
|---|---|---|
| 1980 | TICE GREELEY E | Pacific Telephone |
| 1970 | TICE GREELEY E | Pacific Telephone |
| | TICE GREELEY E | Pacific Telephone |
| 1962 | TICE GREELEY E | Pacific Telephone |
| 1956 | KINMAN O T | Pacific Telephone |
| 1950 | COLLIGNON W M R | Pacific Telephone |
| | COLLIGNON W M R | Pacific Telephone |

**850 N NORTON AVE**

| Year | Uses | Source |
|---|---|---|
| 1980 | COLE DONALD L | Pacific Telephone |
| 1970 | KUENPEL ERNEST L | Pacific Telephone |
| | KUENPEL ERNEST L | Pacific Telephone |
| 1962 | KUEMPEL ERNEST L | Pacific Telephone |
| 1956 | KUEMPEL ERNEST L R | Pacific Telephone |
| 1950 | KUEMPEL ERNEST L R | Pacific Telephone |
| | KUEMPEL ERNEST L R | Pacific Telephone |

**851 N NORTON AVE**

| Year | Uses | Source |
|---|---|---|
| 1970 | HAWKINS ROBT F | Pacific Telephone |
| | HAWKINS ROBT F | Pacific Telephone |
| 1962 | HAWKINS ROBT F | Pacific Telephone |
| 1956 | HAWKINS ROBT F R | Pacific Telephone |
| 1950 | HAWKINS ROBT F R | Pacific Telephone |
| | HAWKINS ROBT F R | Pacific Telephone |

**854 N NORTON AVE**

| Year | Uses | Source |
|---|---|---|
| 1980 | MARTIN ERNEST F REV | Pacific Telephone |
| 1970 | LOWINGER HENRY P | Pacific Telephone |

| Year | Uses | Source |
|---|---|---|
| 1970 | LOWINGER HENRY P | Pacific Telephone |
| 1962 | LILE MARLIN | Pacific Telephone |
| 1956 | COLEMAN NEAL J R | Pacific Telephone |
| 1950 | STEPHAN CARL O R | Pacific Telephone |
| | STEPHAN CARL O R | Pacific Telephone |

**857 N NORTON AVE**

| Year | Uses | Source |
|---|---|---|
| 1962 | SCHERF ERWIN | Pacific Telephone |
| 1956 | SCHERF ERVIN | Pacific Telephone |
| 1950 | KITTO LEICESTER F R | Pacific Telephone |
| | KITTO LEICESTER F R | Pacific Telephone |

**860 N NORTON AVE**

| Year | Uses | Source |
|---|---|---|
| 1924 | Krown Chas slsmn George Sunday Inc r | Los Angeles Directory Co. |

## N SAN FERNANDO RD

**6006 N SAN FERNANDO RD**

| Year | Uses | Source |
|---|---|---|
| 1980 | MR FENCE INC | Pacific Telephone |

## NORTON

**812 NORTON**

| Year | Uses | Source |
|---|---|---|
| 1933 | Harris Abr Howe tailor | Los Angeles Directory Co. |

**826 NORTON**

| Year | Uses | Source |
|---|---|---|
| 1971 | Samson Pauline I | Pacific Telephone |
| 1967 | Faigin Rose Mrs | Pacific Telephone |
| | Samson Pauline I | Pacific Telephone |
| 1962 | Samson Pauline I | Pacific Telephone |
| 1958 | Samson Pauline I | Pacific Telephone |

# FINDINGS

## NORTON AVE

### 800 NORTON AVE

| Year | Uses | Source |
|---|---|---|
| 1942 | Croxton Suzann | Los Angeles Directory Co. |

### 804 NORTON AVE

| Year | Uses | Source |
|---|---|---|
| 2006 | PLEASANT Meoshie | Haines Company, Inc. |
| | RARES Lelda | Haines Company, Inc. |
| 2001 | KWAK Min Hui | Haines & Company, Inc. |
| | MACASPAC Clarissa | Haines & Company, Inc. |
| | RODRIGUEZ E | Haines & Company, Inc. |
| 1995 | Hoffman Scott T | Pacific Bell |
| | Velasquez Esther | Pacific Bell |
| 1991 | Dominguez Rosarto | Pacific Bell |
| | Rudys Appliances Service & Repair | Pacific Bell |
| | Wangfing | Pacific Bell |
| | Wang C | Pacific Bell |
| | Wang C | Pacific Bell |
| 1985 | Bond L C | Pacific Bell |
| | Heckmann Reed & Anne | Pacific Bell |
| | Stracke Donald | Pacific Bell |
| 1975 | Hause Dennis R | Pacific Telephone |
| 1972 | 8ASANDEY ANNA M | R. L. Polk & Co. |
| | 6JUNG JOHN | R. L. Polk & Co. |
| | ESTERA MANOR APARTMENTS | R. L. Polk & Co. |
| | 1DIAZ JAIME | R. L. Polk & Co. |
| | 2STEVENS CHOM SUN | R. L. Polk & Co. |
| | 3SMITH CHARLES | R. L. Polk & Co. |
| | 4BURDEN DENNIS | R. L. Polk & Co. |
| | 5COX GEO R | R. L. Polk & Co. |
| | 7AVALENCIA KENNETH W | R. L. Polk & Co. |
| 1967 | 5GROSS JOHN E | R. L. Polk & Co. |
| | 6BARRINGER ROBT | R. L. Polk & Co. |
| | 7DIAZ DOMINGO | R. L. Polk & Co. |
| | 8FALCONE CAROL MRS | R. L. Polk & Co. |
| | 3WILSON TED C | R. L. Polk & Co. |
| | 2COMINGORE WM J | R. L. Polk & Co. |
| | 4BURDEN JAMES D | R. L. Polk & Co. |

# FINDINGS

| Year | Uses | Source |
|---|---|---|
| 1967 | 1BESSERT DENNIS S | R. L. Polk & Co. |
| | APARTMENTS | R. L. Polk & Co. |

**810 NORTON AVE**

| Year | Uses | Source |
|---|---|---|
| 2006 | DEGALARRETA An | Haines Company, Inc. |
| | Ruiz GUERREROJoel | Haines Company, Inc. |
| | SANTIAGO Helga D | Haines Company, Inc. |
| 2001 | DEGALARRETA Ana Ruiz | Haines & Company, Inc. |
| | SANTIAGO Helga D | Haines & Company, Inc. |
| 1995 | Rauil de Galarreta Gabriel | Pacific Bell |
| 1991 | Hohenstein P J | Pacific Bell |
| | Murphy Bl A | Pacific Bell |
| | Murphy BG | Pacific Bell |
| | Ruiz de Galarreta Gabriel | Pacific Bell |
| 1985 | De Galareta Ruiz Gabriel | Pacific Bell |
| | Hohenstein P J | Pacific Bell |
| | Murphy Bl A | Pacific Bell |
| | Staveley Michael | Pacific Bell |
| 1975 | Parker L M | Pacific Telephone |
| 1972 | 204COBBE JEFFREY W | R. L. Polk & Co. |
| | 203QUERIDO CURTIS | R. L. Polk & Co. |
| | 202HOHENSTEIN PEGGY J | R. L. Polk & Co. |
| | 201BIRD ALM | R. L. Polk & Co. |
| | 103ARATA NELDA MRS | R. L. Polk & Co. |
| | 102BEAUCHAMP S L | R. L. Polk & Co. |
| | 101VACANT | R. L. Polk & Co. |
| | APARTMENTS | R. L. Polk & Co. |
| | 205COX SAML | R. L. Polk & Co. |
| 1967 | APARTMENTS | R. L. Polk & Co. |
| | 101PAICHE PHILIP J | R. L. Polk & Co. |
| | 102LARRICK BRUCE H JR | R. L. Polk & Co. |
| | 103ARATA NELDA | R. L. Polk & Co. |
| | 201VACANT | R. L. Polk & Co. |
| | 202WYLIE N | R. L. Polk & Co. |
| | 205COX SAML | R. L. Polk & Co. |
| | 204BULLOCK ROBT W | R. L. Polk & Co. |
| | 203QUERIDO C | R. L. Polk & Co. |
| 1955 | HENRY CLAUDE L | R. L. Polk & Co. |

# FINDINGS

| Year | Uses | Source |
|---|---|---|
| 1951 | IHBEH R P C CI | R. L. Polk & Co. |

**813 NORTON AVE**

| Year | Uses | Source |
|---|---|---|
| 2006 | o OJEDAMagdalena M | Haines Company, Inc. |

**814 NORTON AVE**

| Year | Uses | Source |
|---|---|---|
| 2006 | PIERLOTJohn | Haines Company, Inc. |
| 2001 | PIERLOT John L | Haines & Company, Inc. |
| 1995 | Pierlot John L | Pacific Bell |
| 1991 | Pierlot John L | Pacific Bell |
| 1985 | Piertot John L | Pacific Bell |
| 1972 | PIERLOT JOHN L | R. L. Polk & Co. |
| 1967 | PIERLOT JOHN L | R. L. Polk & Co. |
| 1960 | PFLERLOT JOHN L | R. L. Polk & Co. |
| 1955 | PIERLOT JOHN L | R. L. Polk & Co. |
| 1951 | BRUSH B P C | R. L. Polk & Co. |
| 1929 | Harris Abr Eva tailor | Los Angeles Directory Co. |

**815 NORTON AVE**

| Year | Uses | Source |
|---|---|---|
| 2006 | PARKS Natalle Dale | Haines Company, Inc. |
| | HEINTZELMAN M | Haines Company, Inc. |
| | HEINTZELMAN K | Haines Company, Inc. |
| 2001 | XXXX | Haines & Company, Inc. |
| 1991 | Ruble S | Pacific Bell |
| | Ruble Robert | Pacific Bell |
| 1972 | STEWART DONALD D | R. L. Polk & Co. |
| 1967 | SANABRAIS JOSE B | R. L. Polk & Co. |
| 1960 | SANABRAIS JOSE B | R. L. Polk & Co. |
| 1955 | WISMER HENRY DO | R. L. Polk & Co. |
| 1951 | BARNETT R J C | R. L. Polk & Co. |

**817 NORTON AVE**

| Year | Uses | Source |
|---|---|---|
| 1933 | Pagliano Jos E Lorena Calif Importing Co | Los Angeles Directory Co. |

# FINDINGS

**818 NORTON AVE**

| Year | Uses | Source |
|---|---|---|
| 2006 | PAK Tiffany S | Haines Company, Inc. |
| 2001 | PAK Tiffany | Haines & Company, Inc. |
| 1985 | Willis Edna | Pacific Bell |
| 1972 | WILLIS EDNA MRS | R. L. Polk & Co. |
| 1967 | WILLIS EDNA | R. L. Polk & Co. |
| 1960 | FERGUSON HERBERT A (R) | R. L. Polk & Co. |
| 1955 | GARDNER J ROY | R. L. Polk & Co. |
| 1951 | KNOWLES V L MRS C | R. L. Polk & Co. |

**822 NORTON AVE**

| Year | Uses | Source |
|---|---|---|
| 2006 | No Current Listing | Haines Company, Inc. |
| 2001 | XXXX | Haines & Company, Inc. |
| 1995 | 2 Crismon Mike & Nancy | Pacific Bell |
| | Criscione Nick | Pacific Bell |
| 1991 | Wahlstrom Scott & Kaye | Pacific Bell |
| 1986 | SHEPPARD & ASSOCIATES-IRRADIATORS GLENDALE | Pacific Bell |
| | SHEPHERD J L & ASSOCIATES GLENDALE | Pacific Bell |
| | SHEPHERD & ASSOCIATES GLENDALE | Pacific Bell |
| | SHEPARD & ASSOCIATES-IRRADIATORS GLENDALE | Pacific Bell |
| 1985 | Prehoda Ludwig C | Pacific Bell |
| 1972 | PREHODA LUDWIG C | R. L. Polk & Co. |
| 1967 | PREHODA LUDWIG C | R. L. Polk & Co. |
| 1960 | FREHODA LUDWIG C (8 AC | R. L. Polk & Co. |
| 1955 | PRDHODA LUDWIG C | R. L. Polk & Co. |
| 1951 | ELEIST P H C | R. L. Polk & Co. |

**823 NORTON AVE**

| Year | Uses | Source |
|---|---|---|
| 2006 | a GAY Carvel | Haines Company, Inc. |
| 2001 | XXXX | Haines & Company, Inc. |
| 1995 | Christophersen F E | Pacific Bell |
| 1991 | Christophersen F E | Pacific Bell |
| 1985 | Christophersen F E | Pacific Bell |
| 1972 | REIMEL ADA L MRS | R. L. Polk & Co. |

# FINDINGS

| Year | Uses | Source |
|---|---|---|
| 1967 | REIMEL ADA L MRS | R. L. Polk & Co. |
| 1960 | BRYANT HAROLD S | R. L. Polk & Co. |
| 1955 | GERMAIN WM | R. L. Polk & Co. |
| 1951 | SEYMOUR E W | R. L. Polk & Co. |

**825 NORTON AVE**

| Year | Uses | Source |
|---|---|---|
| 2006 | SALAZAR Paul | Haines Company, Inc. |
| 2001 | XXXX | Haines & Company, Inc. |
| 1991 | Fletcher HR | Pacific Bell |
| | Fletcher HW | Pacific Bell |
| | Fletcher Harry W & Roberta | Pacific Bell |
| 1985 | Fletcher H R | Pacific Bell |
| 1972 | CHRISTOPHERSEN FLORENCE MRS | R. L. Polk & Co. |
| 1967 | CHRISTOPHERSEN FLORENCE MRS | R. L. Polk & Co. |
| 1960 | OWENS REX T 40C | R. L. Polk & Co. |
| 1955 | SEYMOUR MAE F MRS | R. L. Polk & Co. |
| 1951 | WILLIAMSON ALEX C | R. L. Polk & Co. |

**826 NORTON AVE**

| Year | Uses | Source |
|---|---|---|
| 2008 | RAZ PLUMBING | Cole Information Services |
| 2006 | No Current Listing | Haines Company, Inc. |
| 1995 | Robertson Kirk & Katy | Pacific Bell |
| 1985 | Schroeder Edw | Pacific Bell |
| 1981 | SAMSON PAULINE I GLENDALE | Pacific Telephone |
| 1972 | SAMSON PAULINE I MRS | R. L. Polk & Co. |
| 1971 | Faigin Rose Mrs | Pacific Telephone |
| 1967 | SAMSON PAULINE I MRS | R. L. Polk & Co. |
| 1960 | SAMSON PAULINE I MRS ( ACH | R. L. Polk & Co. |
| 1955 | SAMSON PAULINE I MRS | R. L. Polk & Co. |
| 1951 | SAMSON P I MRS C | R. L. Polk & Co. |
| 1942 | Millfelt E R trav frt and pass agt Western Pac RRCo | Los Angeles Directory Co. |

**827 NORTON AVE**

| Year | Uses | Source |
|---|---|---|
| 1985 | Glenn W E | Pacific Bell |
| | Glenn Wm A | Pacific Bell |
| 1972 | GLENN WARREN E | R. L. Polk & Co. |

# FINDINGS

| Year | Uses | Source |
|---|---|---|
| 1967 | GLENN WARREN E | R. L. Polk & Co. |
| 1960 | GOFF ROLAND C | R. L. Polk & Co. |
| 1955 | GOFF STANLEY D (R) | R. L. Polk & Co. |
| 1951 | GOFF S D C | R. L. Polk & Co. |

**830 NORTON AVE**

| Year | Uses | Source |
|---|---|---|
| 2006 | e ACOSTA Prsd Ila | Haines Company, Inc. |
| 2001 | ACOSTA Priscilla | Haines & Company, Inc. |
| 1991 | Higgins George | Pacific Bell |
| 1972 | EDWARDS JAMES T | R. L. Polk & Co. |
| 1967 | BAKER JOHN I | R. L. Polk & Co. |
| 1960 | BAKER JOHN I | R. L. Polk & Co. |
| 1955 | BAKER JOHN I | R. L. Polk & Co. |
| 1951 | BAKER J I C CL | R. L. Polk & Co. |

**831 NORTON AVE**

| Year | Uses | Source |
|---|---|---|
| 2006 | No Current Listing | Haines Company, Inc. |
| 2001 | DODOS Ruth | Haines & Company, Inc. |
| 1991 | Dodds S W | Pacific Bell |
| | Dodds Ruth E | Pacific Bell |
| 1985 | Dodds Ruth E | Pacific Bell |
| 1972 | DODDS RUTH E MRS | R. L. Polk & Co. |
| 1967 | DODOS RUTH E | R. L. Polk & Co. |
| 1960 | DODDS RUTH E | R. L. Polk & Co. |
| 1955 | DODDS RUTH E | R. L. Polk & Co. |
| 1951 | DODDS RUTH E C | R. L. Polk & Co. |

**834 NORTON AVE**

| Year | Uses | Source |
|---|---|---|
| 2006 | ACOSTAEIv Ir | Haines Company, Inc. |
| 2001 | ACOSTA Francisco | Haines & Company, Inc. |
| 1995 | Snyder John C | Pacific Bell |
| 1991 | Snyder John C | Pacific Bell |
| 1985 | Snyder John C | Pacific Bell |
| 1972 | WILCOX LEONARD | R. L. Polk & Co. |
| 1967 | CARR GARY S | R. L. Polk & Co. |
| 1960 | CONFREY J H (84 C | R. L. Polk & Co. |

# FINDINGS

| Year | Uses | Source |
|---|---|---|
| 1955 | CONFREY J H | R. L. Polk & Co. |
| 1951 | MURPHY R H C | R. L. Polk & Co. |

**835 NORTON AVE**

| Year | Uses | Source |
|---|---|---|
| 2006 | HENDERSON Paticla | Haines Company, Inc. |
| 2001 | HENDERSON Patricia | Haines & Company, Inc. |
| 1986 | GREENFIELD SADELLE MRS | Pacific Bell |
| 1976 | Pickard Sanford | Pacific Telephone |
| 1972 | LE CHEMINANT KENNETH J | R. L. Polk & Co. |
| 1967 | WITT WALTER T CI | R. L. Polk & Co. |
| 1960 | WLTT WALTER T C (S | R. L. Polk & Co. |
| 1955 | WITT WALTER T C | R. L. Polk & Co. |
| 1951 | WITT W T C C | R. L. Polk & Co. |

**838 NORTON AVE**

| Year | Uses | Source |
|---|---|---|
| 2001 | MORROW Madeline | Haines & Company, Inc. |
| 1991 | Morrow Carl L | Pacific Bell |
| 1985 | Morrow Carl L | Pacific Bell |
| 1972 | MORROW CARL L | R. L. Polk & Co. |
| 1967 | MORROW CARL L C | R. L. Polk & Co. |
| 1960 | MORROW CURL 1 | R. L. Polk & Co. |
| 1955 | MRROW CARL L(R) | R. L. Polk & Co. |
| 1951 | MORROW C L C | R. L. Polk & Co. |

**839 NORTON AVE**

| Year | Uses | Source |
|---|---|---|
| 2008 | AGC VISION INC | Cole Information Services |
| 2006 | CRUZJose | Haines Company, Inc. |
| 2001 | LE Tuan | Haines & Company, Inc. |
| 1985 | Schrage Jas | Pacific Bell |
| 1972 | SCHRAGE JAMES A | R. L. Polk & Co. |
| 1967 | SCHRAGE JAMES A BLDG CONTR | R. L. Polk & Co. |
| 1960 | ) 1SCHRTGE JUAR A 4 BLDG CONTR | R. L. Polk & Co. |
| 1955 | WATTS DONALD C | R. L. Polk & Co. |
| 1951 | TWATTS D C C | R. L. Polk & Co. |

# FINDINGS

**842 NORTON AVE**

| Year | Uses | Source |
|---|---|---|
| 1972 | DEARTH PAUL L | R. L. Polk & Co. |
| 1967 | DEARTH PAUL L | R. L. Polk & Co. |
| 1960 | DCARTH PAUL I | R. L. Polk & Co. |
| 1955 | CUNNINGHAM VERA K MRS | R. L. Polk & Co. |
| 1951 | CUNNINGHAM V K MRS C | R. L. Polk & Co. |

**843 NORTON AVE**

| Year | Uses | Source |
|---|---|---|
| 2006 | PAJAMabel | Haines Company, Inc. |
| 2001 | PERRY Pablo | Haines & Company, Inc. |
| 1991 | Tripolino Anthony | Pacific Bell |
| 1985 | Tripp A P | Pacific Bell |
| | Tripolino Anthony | Pacific Bell |
| 1972 | TRIPOLINO ANTHONY | R. L. Polk & Co. |
| 1967 | TRIPOLINO ANTHONY | R. L. Polk & Co. |
| 1960 | TRQOLINOTI ANTHONY | R. L. Polk & Co. |
| 1955 | TRIPOLINO ANTHONY(R) | R. L. Polk & Co. |
| 1951 | STANDLEY MARGT MRS C | R. L. Polk & Co. |

**846 NORTON AVE**

| Year | Uses | Source |
|---|---|---|
| 1972 | CRANK CURTIS C | R. L. Polk & Co. |
| 1967 | CRANK CURTIS C | R. L. Polk & Co. |
| 1960 | (0 (RAK CURTIA C | R. L. Polk & Co. |
| 1955 | TUMA MARY | R. L. Polk & Co. |
| 1951 | BEHOTEGUY W C C | R. L. Polk & Co. |

**847 NORTON AVE**

| Year | Uses | Source |
|---|---|---|
| 2006 | KEPENYAN Hovik | Haines Company, Inc. |
| | Tuonar | Haines Company, Inc. |
| | KARAGEZYAN | Haines Company, Inc. |
| 2001 | KEPENYAN Petros | Haines & Company, Inc. |
| | KARAGEZYAN Tsovinar | Haines & Company, Inc. |
| 1995 | Tice Greeley E | Pacific Bell |
| 1991 | Tice H&W | Pacific Bell |
| | Tice Greeley E | Pacific Bell |
| 1985 | Tice H & W | Pacific Bell |

# FINDINGS

| Year | Uses | Source |
|---|---|---|
| 1985 | Tice Greeley E | Pacific Bell |
| 1972 | TICE GREELEY E | R. L. Polk & Co. |
| 1967 | TICE GREELEY E | R. L. Polk & Co. |
| 1960 | T E:E GIREICKY I | R. L. Polk & Co. |
| 1955 | KINMAN OLIVER T | R. L. Polk & Co. |
| 1951 | MILLER G M | R. L. Polk & Co. |

**850 NORTON AVE**

| Year | Uses | Source |
|---|---|---|
| 1972 | COLE DONALD L | R. L. Polk & Co. |
| 1967 | KUEMPEL ERNEST L | R. L. Polk & Co. |
| 1960 | KUTRIMCL NERRITST 1 | R. L. Polk & Co. |
| 1955 | KUEMPEL ERNEST L0 | R. L. Polk & Co. |
| 1951 | KUEMPEL EL C | R. L. Polk & Co. |

**851 NORTON AVE**

| Year | Uses | Source |
|---|---|---|
| 2006 | e ASLANIAN Harudun | Haines Company, Inc. |
| 2001 | GHARIBIAN Serge | Haines & Company, Inc. |
| 1991 | Tchakmakjian Jack | Pacific Bell |
| 1972 | HAWKINS GERTRUDE MRS | R. L. Polk & Co. |
| 1967 | HAWKINS GERTRUDE MRS | R. L. Polk & Co. |
| 1960 | LLAWKTINS KIOLB F (N) (N) ) 4(1I | R. L. Polk & Co. |
| 1955 | HAWKINS ROBT F(R) | R. L. Polk & Co. |
| 1951 | HAWKLINS R F C | R. L. Polk & Co. |

**854 NORTON AVE**

| Year | Uses | Source |
|---|---|---|
| 1972 | NO RETURN | R. L. Polk & Co. |
| 1967 | LILE MARLIN W | R. L. Polk & Co. |
| 1960 | I1TE MARLIN W | R. L. Polk & Co. |
| 1955 | COLEMAN NEAL J | R. L. Polk & Co. |
| 1951 | COLEMAN N J | R. L. Polk & Co. |

**857 NORTON AVE**

| Year | Uses | Source |
|---|---|---|
| 1972 | PROCTOR RICHD P | R. L. Polk & Co. |
| 1967 | SCHERF ERWIN P | R. L. Polk & Co. |
| 1960 | SCHERF ERWIN 1 | R. L. Polk & Co. |
| 1955 | KITTO LEICESTER F | R. L. Polk & Co. |

| Year | Uses | Source |
|---|---|---|
| 1951 | KITTO L F C | R. L. Polk & Co. |

**865 NORTON AVE**

| Year | Uses | Source |
|---|---|---|
| 1981 | MCLAUGHLIN J | Pacific Telephone |

**806 1/2 NORTON AVE**

| Year | Uses | Source |
|---|---|---|
| 1981 | PEDERSON E | Pacific Telephone |

## NORTON AVE N

**814 NORTON AVE N**

| Year | Uses | Source |
|---|---|---|
| 1945 | J L MAULER | The Glendale Directory Co. |
| 1940 | 5 IL MAULER | Glendale Directory Co. |

**815 NORTON AVE N**

| Year | Uses | Source |
|---|---|---|
| 1945 | N H CLARK | The Glendale Directory Co. |

**818 NORTON AVE N**

| Year | Uses | Source |
|---|---|---|
| 1945 | MRS V L KNOWIES | The Glendale Directory Co. |
| 1940 | SIDNEY WATERTLELD | Glendale Directory Co. |

**822 NORTON AVE N**

| Year | Uses | Source |
|---|---|---|
| 1945 | PHERN KEIST | The Glendale Directory Co. |
| 1940 | 0 13 TALBOTT | Glendale Directory Co. |

**823 NORTON AVE N**

| Year | Uses | Source |
|---|---|---|
| 1945 | S A SEYMOUR JR | The Glendale Directory Co. |

**825 NORTON AVE N**

| Year | Uses | Source |
|---|---|---|
| 1945 | MARIE E REIMBOLT | The Glendale Directory Co. |

**826 NORTON AVE N**

| Year | Uses | Source |
|---|---|---|
| 1945 | SAMUEL SAMPSON | The Glendale Directory Co. |

# FINDINGS

| Year | Uses | Source |
|---|---|---|
| 1940 | B S WALL | Glendale Directory Co. |

**827 NORTON AVE N**

| Year | Uses | Source |
|---|---|---|
| 1945 | FERDINAND KRETZ | The Glendale Directory Co. |
| 1940 | J C FLEISHER | Glendale Directory Co. |

**830 NORTON AVE N**

| Year | Uses | Source |
|---|---|---|
| 1945 | J I BAKER | The Glendale Directory Co. |
| 1940 | J I BAKER | Glendale Directory Co. |

**831 NORTON AVE N**

| Year | Uses | Source |
|---|---|---|
| 1945 | RUTH E DODDS | The Glendale Directory Co. |
| 1940 | RUTH B DODDA | Glendale Directory Co. |

**834 NORTON AVE N**

| Year | Uses | Source |
|---|---|---|
| 1945 | R H MURPHY | The Glendale Directory Co. |
| 1940 | B H: MURPHY | Glendale Directory Co. |

**835 NORTON AVE N**

| Year | Uses | Source |
|---|---|---|
| 1945 | WALTER T C WITT | The Glendale Directory Co. |
| 1940 | NT E MOSER | Glendale Directory Co. |

**838 NORTON AVE N**

| Year | Uses | Source |
|---|---|---|
| 1945 | C L MORROW | The Glendale Directory Co. |
| 1940 | C L MORROW | Glendale Directory Co. |

**839 NORTON AVE N**

| Year | Uses | Source |
|---|---|---|
| 1945 | C E FISHBACK | The Glendale Directory Co. |
| 1940 | P JACK FRISEB | Glendale Directory Co. |

**842 NORTON AVE N**

| Year | Uses | Source |
|---|---|---|
| 1945 | C S CUNNINGHAM | The Glendale Directory Co. |
| 1940 | S CUNNINGHAMN | Glendale Directory Co. |

**843 NORTON AVE N**

| Year | Uses | Source |
|---|---|---|
| 1945 | WILLIS E FORD | The Glendale Directory Co. |
| 1940 | L T BAILEY | Glendale Directory Co. |

**846 NORTON AVE N**

| Year | Uses | Source |
|---|---|---|
| 1945 | JENNIFER BEHOTEGUY | The Glendale Directory Co. |
| 1940 | G F GROTH | Glendale Directory Co. |

**847 NORTON AVE N**

| Year | Uses | Source |
|---|---|---|
| 1945 | J R FRIBORG | The Glendale Directory Co. |
| 1940 | HOMER GIBBONS | Glendale Directory Co. |

**850 NORTON AVE N**

| Year | Uses | Source |
|---|---|---|
| 1945 | E J REEBIE | The Glendale Directory Co. |
| 1940 | E J REEBIE | Glendale Directory Co. |

**851 NORTON AVE N**

| Year | Uses | Source |
|---|---|---|
| 1945 | R F HAWKINS | The Glendale Directory Co. |
| 1940 | IF HAWKINS | Glendale Directory Co. |

**854 NORTON AVE N**

| Year | Uses | Source |
|---|---|---|
| 1945 | E J FILSINGER | The Glendale Directory Co. |
| 1940 | KATHRYN A DUNN | Glendale Directory Co. |

**857 NORTON AVE N**

| Year | Uses | Source |
|---|---|---|
| 1945 | L F KITTO | The Glendale Directory Co. |

## NORTON AVE S

**800 NORTON AVE S**

| Year | Uses | Source |
|---|---|---|
| 1951 | S Nortn Av Deckbar H C Mrs r | Pacific Telephone & Telegraph Co. |
| | S Nortn Engelbrecht Albert T r | Pacific Telephone & Telegraph Co. |

# FINDINGS

**801 NORTON AVE S**

| Year | Uses | Source |
|---|---|---|
| 1951 | S Nortn Inge F Jas r | Pacific Telephone & Telegraph Co. |
| | S Nortn Bush Gladys P Mrs r | Pacific Telephone & Telegraph Co. |

**802 NORTON AVE S**

| Year | Uses | Source |
|---|---|---|
| 1951 | S Nortn Greenstreet Maurene r | Pacific Telephone & Telegraph Co. |
| | S Nortn Schneider Gustav B r | Pacific Telephone & Telegraph Co. |

**803 NORTON AVE S**

| Year | Uses | Source |
|---|---|---|
| 1951 | S Nortn Norris Neil J r | Pacific Telephone & Telegraph Co. |

**806 NORTON AVE S**

| Year | Uses | Source |
|---|---|---|
| 1951 | S Nortn Av Nagy Anna P r | Pacific Telephone & Telegraph Co. |

**810 NORTON AVE S**

| Year | Uses | Source |
|---|---|---|
| 1951 | S Nortn Gross Carl W r | Pacific Telephone & Telegraph Co. |

**811 NORTON AVE S**

| Year | Uses | Source |
|---|---|---|
| 1951 | S Nortn Albright Florence I Mrs r | Pacific Telephone & Telegraph Co. |
| | S Nortn Davis Lawrence H r | Pacific Telephone & Telegraph Co. |

**812 NORTON AVE S**

| Year | Uses | Source |
|---|---|---|
| 1951 | S Nortn Redans L B Mrs r | Pacific Telephone & Telegraph Co. |

**814 NORTON AVE S**

| Year | Uses | Source |
|---|---|---|
| 1951 | S Nortn Av Werminghaus B E r | Pacific Telephone & Telegraph Co. |

**817 NORTON AVE S**

| Year | Uses | Source |
|---|---|---|
| 1951 | S Nortn Abrahamian Chas r | Pacific Telephone & Telegraph Co. |

**820 NORTON AVE S**

| Year | Uses | Source |
|---|---|---|
| 1951 | S Nortn Orem Jewel R Mrs r | Pacific Telephone & Telegraph Co. |

**821 NORTON AVE S**

| Year | Uses | Source |
|---|---|---|
| 1951 | S Nortn Catudal Don F r | Pacific Telephone & Telegraph Co. |

**822 NORTON AVE S**

| Year | Uses | Source |
|---|---|---|
| 1951 | S Nortn Oliver Annette r | Pacific Telephone & Telegraph Co. |

**824 NORTON AVE S**

| Year | Uses | Source |
|---|---|---|
| 1951 | S Nortn Av Zeitlin Robt M r | Pacific Telephone & Telegraph Co. |

**826 NORTON AVE S**

| Year | Uses | Source |
|---|---|---|
| 1951 | S Nortn Stewart Alva B Dr r | Pacific Telephone & Telegraph Co. |

**827 NORTON AVE S**

| Year | Uses | Source |
|---|---|---|
| 1951 | S Nortn Lucas Dorothy F r | Pacific Telephone & Telegraph Co. |

**829 NORTON AVE S**

| Year | Uses | Source |
|---|---|---|
| 1951 | S Nortn Young M L Mrs r | Pacific Telephone & Telegraph Co. |

**830 NORTON AVE S**

| Year | Uses | Source |
|---|---|---|
| 1951 | S Nortn Danielson Laura C Miss r | Pacific Telephone & Telegraph Co. |

**831 NORTON AVE S**

| Year | Uses | Source |
|---|---|---|
| 1951 | S Nortn Little W E r | Pacific Telephone & Telegraph Co. |

**832 NORTON AVE S**

| Year | Uses | Source |
|---|---|---|
| 1951 | S Nortn Mahoney T J Mrs r | Pacific Telephone & Telegraph Co. |

**837 NORTON AVE S**

| Year | Uses | Source |
|---|---|---|
| 1951 | S Nortn Av Timton Studio | Pacific Telephone & Telegraph Co. |

**840 NORTON AVE S**

| Year | Uses | Source |
|---|---|---|
| 1951 | S Nortn Roos Harry G r | Pacific Telephone & Telegraph Co. |

# FINDINGS

**841 NORTON AVE S**

| Year | Uses | Source |
|---|---|---|
| 1951 | S Nortn Av Hodge Chas W r | Pacific Telephone & Telegraph Co. |
| | S Nortn Av Rinehart Norma r | Pacific Telephone & Telegraph Co. |

**846 NORTON AVE S**

| Year | Uses | Source |
|---|---|---|
| 1951 | S Nortn Rager Scott B r | Pacific Telephone & Telegraph Co. |

**847 NORTON AVE S**

| Year | Uses | Source |
|---|---|---|
| 1951 | S Nortn Mulkern John J r | Pacific Telephone & Telegraph Co. |

**850 NORTON AVE S**

| Year | Uses | Source |
|---|---|---|
| 1951 | S Nortn Hollingsworth M C MD r | Pacific Telephone & Telegraph Co. |

**851 NORTON AVE S**

| Year | Uses | Source |
|---|---|---|
| 1951 | S Nortn Cook H I r | Pacific Telephone & Telegraph Co. |

**857 NORTON AVE S**

| Year | Uses | Source |
|---|---|---|
| 1951 | S Nortn Av Flynn Pat r | Pacific Telephone & Telegraph Co. |

**860 NORTON AVE S**

| Year | Uses | Source |
|---|---|---|
| 1951 | S Nortn Hodges John P r | Pacific Telephone & Telegraph Co. |

**861 NORTON AVE S**

| Year | Uses | Source |
|---|---|---|
| 1951 | S Nortn Holladay Wm T MD r | Pacific Telephone & Telegraph Co. |

**863 NORTON AVE S**

| Year | Uses | Source |
|---|---|---|
| 1951 | S Nortn Baggett Ernest R r | Pacific Telephone & Telegraph Co. |

**865 NORTON AVE S**

| Year | Uses | Source |
|---|---|---|
| 1951 | S Nortn Blackburn Hilton r | Pacific Telephone & Telegraph Co. |
| | S Nortn Miller John H r | Pacific Telephone & Telegraph Co. |

## NORTON ST

### 804 NORTON ST

| Year | Uses | Source |
|---|---|---|
| 1975 | Hollis Geo G | Pacific Telephone |
| | Biggs David | Pacific Telephone |
| | Burden Saml J | Pacific Telephone |

### 810 NORTON ST

| Year | Uses | Source |
|---|---|---|
| 1975 | Greene Steve M | Pacific Telephone |
| | Hohenstein P J | Pacific Telephone |

### 814 NORTON ST

| Year | Uses | Source |
|---|---|---|
| 1975 | Pierlot John L | Pacific Telephone |

### 815 NORTON ST

| Year | Uses | Source |
|---|---|---|
| 1975 | Stewart Donald D | Pacific Telephone |

### 818 NORTON ST

| Year | Uses | Source |
|---|---|---|
| 1975 | Willis Edna | Pacific Telephone |

### 822 NORTON ST

| Year | Uses | Source |
|---|---|---|
| 1975 | Prehoda Ludwig C | Pacific Telephone |

### 823 NORTON ST

| Year | Uses | Source |
|---|---|---|
| 1975 | Christophersen F E | Pacific Telephone |

### 825 NORTON ST

| Year | Uses | Source |
|---|---|---|
| 1975 | Fletcher Harriet | Pacific Telephone |

### 826 NORTON ST

| Year | Uses | Source |
|---|---|---|
| 1975 | Samson Pauline I | Pacific Telephone |

# FINDINGS

**827 NORTON ST**

| Year | Uses | Source |
|---|---|---|
| 1975 | Glenn W E | Pacific Telephone |

**830 NORTON ST**

| Year | Uses | Source |
|---|---|---|
| 1975 | Edwards Jas T | Pacific Telephone |

**831 NORTON ST**

| Year | Uses | Source |
|---|---|---|
| 1975 | Dodds Ruth E | Pacific Telephone |
| | Straube Evelyn E | Pacific Telephone |

**834 NORTON ST**

| Year | Uses | Source |
|---|---|---|
| 1975 | Mulcahy Robt A | Pacific Telephone |

**835 NORTON ST**

| Year | Uses | Source |
|---|---|---|
| 1975 | Le Cheminant Kenneth | Pacific Telephone |

**838 NORTON ST**

| Year | Uses | Source |
|---|---|---|
| 1975 | Morrow Carl L | Pacific Telephone |

**839 NORTON ST**

| Year | Uses | Source |
|---|---|---|
| 1975 | Schrage Jas | Pacific Telephone |

**842 NORTON ST**

| Year | Uses | Source |
|---|---|---|
| 1975 | Dearth Paul | Pacific Telephone |

**843 NORTON ST**

| Year | Uses | Source |
|---|---|---|
| 1975 | Tripolino Anthony | Pacific Telephone |

**846 NORTON ST**

| Year | Uses | Source |
|---|---|---|
| 1975 | Crank Curtis | Pacific Telephone |

**847 NORTON ST**

| Year | Uses | Source |
|---|---|---|
| 1975 | Tice Greeley E | Pacific Telephone |

**850 NORTON ST**

| Year | Uses | Source |
|---|---|---|
| 1975 | Cole Donald L | Pacific Telephone |

**851 NORTON ST**

| Year | Uses | Source |
|---|---|---|
| 1975 | Hawkins Robt F | Pacific Telephone |

## PELANCON AVE

**810 PELANCON AVE**

| Year | Uses | Source |
|---|---|---|
| 2001 | LAGRASTA Conrad | Haines & Company, Inc. |

**811 PELANCON AVE**

| Year | Uses | Source |
|---|---|---|
| 2001 | KHANDJIAN Levon | Haines & Company, Inc. |

**814 PELANCON AVE**

| Year | Uses | Source |
|---|---|---|
| 2001 | HOWE Joe | Haines & Company, Inc. |
| | RIGO William | Haines & Company, Inc. |

**815 PELANCON AVE**

| Year | Uses | Source |
|---|---|---|
| 2001 | AKOPYAN Zhorzh | Haines & Company, Inc. |
| | HAGOPIAN Gevorg | Haines & Company, Inc. |

**819 PELANCON AVE**

| Year | Uses | Source |
|---|---|---|
| 2001 | MOLIERI Frank | Haines & Company, Inc. |

## PELANCONI

**815 PELANCONI**

| Year | Uses | Source |
|---|---|---|
| 1962 | Baptiste Margaret M | Pacific Telephone |

**819 PELANCONI**

| Year | Uses | Source |
|---|---|---|
| 1967 | Osborne Jas A | Pacific Telephone |
| 1962 | Osborne Jas A | Pacific Telephone |

## PELANCONI AVE

**810 PELANCONI AVE**

| Year | Uses | Source |
|---|---|---|
| 2006 | LAGRASTA Conrad | Haines Company, Inc. |
| 1991 | Cassandra Daniela | Pacific Bell |
| | Cassandra J | Pacific Bell |
| 1985 | Delgado Edward | Pacific Bell |
| 1972 | HUTCHINS DOROTHY MRS | R. L. Polk & Co. |
| 1967 | VACANT | R. L. Polk & Co. |
| 1960 | HUTCHINS DOROTHY MRS | R. L. Polk & Co. |
| 1955 | HUTCHINS JOHN O | R. L. Polk & Co. |
| 1951 | SHORT 3 S | R. L. Polk & Co. |

**811 PELANCONI AVE**

| Year | Uses | Source |
|---|---|---|
| 2006 | KHANDJIAN Levon | Haines Company, Inc. |
| 1995 | Howey Richard W | Pacific Bell |
| 1991 | Khandzyan O | Pacific Bell |
| | Khaneghahi Habib | Pacific Bell |
| | Khandjian Levon | Pacific Bell |
| | Khandjian Levon | Pacific Bell |
| 1975 | Helbling Lillian Mrs | Pacific Telephone |
| 1972 | HELBLING LILLIAN H MRS | R. L. Polk & Co. |
| 1967 | HELBLING LILLIAN H MRS S | R. L. Polk & Co. |
| 1960 | HELBLING LILLIAN H | R. L. Polk & Co. |
| | MCINNERNY WALTER L | R. L. Polk & Co. |
| 1955 | HELBLING LILLIAN H | R. L. Polk & Co. |
| 1951 | ILELBLING IS C | R. L. Polk & Co. |

**812 PELANCONI AVE**

| Year | Uses | Source |
|---|---|---|
| 1975 | Paradiso L | Pacific Telephone |
| 1972 | PARADISO L | R. L. Polk & Co. |
| 1967 | WEBBER GAPY E | R. L. Polk & Co. |

# FINDINGS

| Year | Uses | Source |
|---|---|---|
| 1960 | OHMSTEAD RICHD | R. L. Polk & Co. |
| 1955 | ARCHER HERBERT L | R. L. Polk & Co. |
| 1951 | THOMAS J1 LK | R. L. Polk & Co. |

**814 PELANCONI AVE**

| Year | Uses | Source |
|---|---|---|
| 2006 | RIGOWiliar | Haines Company, Inc. |
| 1991 | Anderson Debbie Tua | Pacific Bell |
| | Anderson Deanna | Pacific Bell |
| 1985 | Warlick Mattie | Pacific Bell |
| | Sarkis K | Pacific Bell |
| | Burke Lavinia | Pacific Bell |
| 1975 | Valenzuela Sostenes R | Pacific Telephone |
| 1972 | VACANT | R. L. Polk & Co. |
| 1967 | NO RETURN | R. L. Polk & Co. |
| 1960 | LIGGINS ALL | R. L. Polk & Co. |
| 1955 | LIGGINS ALF | R. L. Polk & Co. |
| 1951 | LLGKINS ALFD | R. L. Polk & Co. |

**815 PELANCONI AVE**

| Year | Uses | Source |
|---|---|---|
| 2006 | I HAGOPIAN Gevorg | Haines Company, Inc. |
| 1985 | Hagopian George | Pacific Bell |
| 1975 | Sabean Russell Mrs | Pacific Telephone |
| 1972 | SABEAN RUSSELL | R. L. Polk & Co. |
| 1967 | SABEAN RUSSELL | R. L. Polk & Co. |
| 1960 | BAPTISTE MARGT M MRS | R. L. Polk & Co. |
| 1958 | Baptiste Margaret M | Pacific Telephone |
| 1955 | BAPTISTE MARGT M MRS | R. L. Polk & Co. |
| 1951 | SANG-LACONMO A C | R. L. Polk & Co. |

**819 PELANCONI AVE**

| Year | Uses | Source |
|---|---|---|
| 2006 | a GOMONIT Cuensoeo | Haines Company, Inc. |
| 1991 | Howey Richard W | Pacific Bell |
| | Howhsapean Greta | Pacific Bell |
| | Howick Amy F | Pacific Bell |
| 1985 | Howey Richard W | Pacific Bell |
| 1975 | Howey Richard W | Pacific Telephone |

| Year | Uses | Source |
|---|---|---|
| 1972 | HOWEY RICHD | R. L. Polk & Co. |
| 1967 | OSBORNE JAMES A | R. L. Polk & Co. |
| 1960 | OSBORNE JAS A | R. L. Polk & Co. |
| 1958 | Osborne Jas A | Pacific Telephone |
| 1955 | OSBORNE JAS A | R. L. Polk & Co. |
| 1951 | BOGARDUS T C | R. L. Polk & Co. |

**820 PELANCONI AVE**

| Year | Uses | Source |
|---|---|---|
| 2006 | a KOWALSKI Kevin | Haines Company, Inc. |
| 1975 | Winkler A G | Pacific Telephone |

**823 PELANCONI AVE**

| Year | Uses | Source |
|---|---|---|
| 2006 | a ACOSTA Pep Ito | Haines Company, Inc. |
| 1995 | Pugmire Ernest E | Pacific Bell |
| 1991 | Pugmire Ernest E | Pacific Bell |
| 1985 | Pugmire Emest E | Pacific Bell |
| 1975 | Pugmire Ernest E | Pacific Telephone |
| 1971 | Chiabotti John C | Pacific Telephone |
| 1958 | Chiabotti John C | Pacific Telephone |

**814A PELANCONI AVE**

| Year | Uses | Source |
|---|---|---|
| 1972 | NO RETURN | R. L. Polk & Co. |
| 1960 | LIGGINS ROBT E | R. L. Polk & Co. |

**811 1/2 PELANCONI AVE**

| Year | Uses | Source |
|---|---|---|
| 1955 | L1L KNIGHT CALMER | R. L. Polk & Co. |

## PELANCONI AVE N

**810 PELANCONI AVE N**

| Year | Uses | Source |
|---|---|---|
| 1945 | D C ROSS | The Glendale Directory Co. |
| 1940 | G0 P FARRELL | Glendale Directory Co. |

**811 PELANCONI AVE N**

| Year | Uses | Source |
|---|---|---|
| 1945 | DC HELBLING | The Glendale Directory Co. |

# FINDINGS

| Year | Uses | Source |
|---|---|---|
| 1940 | EB C HEIBLING | Glendale Directory Co. |

**812 PELANCONI AVE N**

| Year | Uses | Source |
|---|---|---|
| 1945 | R E MCOSKER | The Glendale Directory Co. |
| 1940 | LI H OAKLEY | Glendale Directory Co. |

**814 PELANCONI AVE N**

| Year | Uses | Source |
|---|---|---|
| 1940 | ALT D LIGGINS | Glendale Directory Co. |

**815 PELANCONI AVE N**

| Year | Uses | Source |
|---|---|---|
| 1945 | F J DAMICO | The Glendale Directory Co. |
| 1940 | SA T MCPHAIL | Glendale Directory Co. |

**819 PELANCONI AVE N**

| Year | Uses | Source |
|---|---|---|
| 1945 | H C LEISLE | The Glendale Directory Co. |
| 1940 | : H C LEISLE | Glendale Directory Co. |

## S FLOWER ST

**702 S FLOWER ST**

| Year | Uses | Source |
|---|---|---|
| 1970 | BADGER IAN G | Pacific Telephone |

**801 S FLOWER ST**

| Year | Uses | Source |
|---|---|---|
| 1995 | Kelly T R & Associates | Pacific Bell |
| 1991 | Kelly T R & Associates | Pacific Bell |
| | Kelly T R Roofing Consultant | Pacific Bell |
| | From Van Nuys Telephones Call | Pacific Bell |
| | Kelly Ted | Pacific Bell |
| 1985 | Custom Roofs | Pacific Bell |

## SAN FERNANDO RD

**5846 SAN FERNANDO RD**

| Year | Uses | Source |
|---|---|---|
| 1985 | Angelus Pet Hospital | Pacific Bell |

# FINDINGS

| Year | Uses | Source |
|---|---|---|
| 1985 | Vinson John C Dr Angelus Pet Hospital | Pacific Bell |
| | Kalek Ahmed A DVM | Pacific Bell |
| | Angelus Piano Rentals | Pacific Bell |

**5900 SAN FERNANDO RD**

| Year | Uses | Source |
|---|---|---|
| 2013 | B & B FINANCIAL LIMITED | Cole Information Services |
| 2008 | B B FINANCIAL | Cole Information Services |
| 2006 | B & B FINANCIAL LIMITED | Haines Company, Inc. |
| | CHALLENGERONE COLOR LABORATORIES LLC | Haines Company, Inc. |
| | W J ENGINEERING INC | Haines Company, Inc. |
| | W J ENGINEERING | Haines Company, Inc. |
| 2001 | B&B FINANCIAL LIMITED | Haines & Company, Inc. |
| | PREFERRED IPA OF CALIFORNIA | Haines & Company, Inc. |
| | SAKAIDA DON M LAW OFFICES OF | Haines & Company, Inc. |
| | THRIFTY HEALTHCARE | Haines & Company, Inc. |
| | W J ENGINEERING INC | Haines & Company, Inc. |
| | W J ENGINEERING INC | Haines & Company, Inc. |
| 1995 | KIE V The Talk Of The Town 870 | Pacific Bell |
| | Media Financial Group | Pacific Bell |
| | I Media Internatl | Pacific Bell |
| | Pacificom International | Pacific Bell |
| 1991 | Honolulu Desk Company | Pacific Bell |
| | KIE V Radio | Pacific Bell |
| | KIE V Radio The Talk Of The Town Radio 870 | Pacific Bell |
| | From El Monte Telephones Call | Pacific Bell |
| | From Los Angeles Telephones Call | Pacific Bell |
| | From Van Nuys Telephones Call | Pacific Bell |
| | KIEV TALK OF THE TOWN 870AM GLENDALE | Pacific Bell |
| | KIE V The Talk Of The Town Radio 870 | Pacific Bell |
| | KIIS IN S BROKE RAGE W His | Pacific Bell |
| | From Los Angeles Telephones Call | Pacific Bell |
| | Los Angeles Diamond Factory | Pacific Bell |
| | Volt information Sciences | Pacific Bell |
| 1990 | BEYOND WAR GLENDALE | Pacific Bell |
| | LOS ANGELES DESK CO GLENDALE | Pacific Bell |
| 1986 | LOS ANGELES DESK CO GLENDALE | Pacific Bell |

# FINDINGS

| Year | Uses | Source |
|---|---|---|
| 1972 | VACANT | R. L. Polk & Co. |
| 1967 | Miller Eugene M bldg contr | Pacific Telephone |
| 1962 | Miller Eugene M bldg contr | Pacific Telephone |
| 1960 | MILLER EU M BID CONTR | R. L. Polk & Co. |
| 1958 | Miller Eugene M bldg contr | Pacific Telephone |
| 1955 | MILLER EUG MBLDG CONTR | R. L. Polk & Co. |

**5904 SAN FERNANDO RD**

| Year | Uses | Source |
|---|---|---|
| 2001 | XXXX | Haines & Company, Inc. |
| 1981 | FARM PRODUCE MKT GLENDALE | Pacific Telephone |
| 1976 | Farm Produce Mkt | Pacific Telephone |
| 1975 | Farm Produce Mkt | Pacific Telephone |
| 1972 | VACANT | R. L. Polk & Co. |
| 1971 | Farm Produce Mkt | Pacific Telephone |
| 1967 | Farm Produce Mkt | Pacific Telephone |
| 1962 | Farm Produce Mkt | Pacific Telephone |
| 1960 | FARM PRODUCC (N) I OL 2I | R. L. Polk & Co. |
| 1958 | Farm Produce Mkt | Pacific Telephone |
| 1955 | FARM PRODUCE WHOL | R. L. Polk & Co. |

**5906 SAN FERNANDO RD**

| Year | Uses | Source |
|---|---|---|
| 1960 | LUII C ERAMIC-S (STE) | R. L. Polk & Co. |
| 1955 | LUIGI CERAMICS | R. L. Polk & Co. |

**5914 SAN FERNANDO RD**

| Year | Uses | Source |
|---|---|---|
| 2013 | CENTRAL SCREEN COMPANY | Cole Information Services |
| 2008 | CENTRAL SCREEN CO | Cole Information Services |
| 2006 | CENTRLSCREEN | Haines Company, Inc. |
| 2001 | POOLE Robert | Haines & Company, Inc. |
| | CENTRL SCREEN CO | Haines & Company, Inc. |
| 1995 | Central Screen Co | Pacific Bell |
| 1991 | Central Screen Co | Pacific Bell |
| | From Los Angeles Telephones Call | Pacific Bell |
| | Central Security Systems | Pacific Bell |
| 1990 | CENTRAL SCREEN CO GLENDALE | Pacific Bell |
| 1986 | CENTRAL SCREEN CO GLENDALE | Pacific Bell |

# FINDINGS

| Year | Uses | Source |
|---|---|---|
| 1985 | Central Screen Co | Pacific Bell |
| | From Los Angeles Telephones Call | Pacific Bell |
| 1981 | CENTRAL SCREEN CO GLENDALE | Pacific Telephone |
| 1976 | Central Screen Co | Pacific Telephone |

**5924 SAN FERNANDO RD**

| Year | Uses | Source |
|---|---|---|
| 2013 | CALIFORNIA ELECTRICAL SERVICES | Cole Information Services |
| 2008 | KROL ANDRZEJ | Cole Information Services |
| | CALIFORNIA ELECTRICAL SERVICES | Cole Information Services |
| 2006 | CA ELECTRICAL | Haines Company, Inc. |
| | SERVICES | Haines Company, Inc. |
| 2001 | CA ELECTRICAL SERVICES | Haines & Company, Inc. |
| 1991 | California Electrical Services | Pacific Bell |
| 1985 | Pac Tel P D C | Pacific Bell |
| 1981 | DUFF GORDON INC WELDNG EQUIP GLENDALE | Pacific Telephone |
| 1980 | GORDON DUFF INC WELDNG EQUIP GLENDALE | Pacific Telephone |
| | DUFF GORDON INC WELDNG EQUIP GLENDALE | Pacific Telephone |
| 1976 | Dull Gordon Inc weldng equip | Pacific Telephone |
| 1975 | DUFF GORDON INC weldng equip | Pacific Telephone |
| | Duffs Inc weldng equip | Pacific Telephone |
| | GORDON DUFF INC weldng equip | Pacific Telephone |
| 1972 | DUFF GORDON INC WELDING SUPS | R. L. Polk & Co. |
| 1971 | Duff Gordon Inc weldng equip | Pacific Telephone |
| | Glendale Branch | Pacific Telephone |
| 1967 | GORDON DUFF INC weldng eq Glendale Branch | Pacific Telephone |
| | Duff Gordon Inc weldng equip | Pacific Telephone |
| 1962 | Glendale Branch | Pacific Telephone |
| | Duff Gordon Inc weldng eq | Pacific Telephone |
| 1960 | DUFF GORDON INC LDRS CUPS | R. L. Polk & Co. |
| 1958 | Glendale Branch | Pacific Telephone |
| | Duff Gordon Inc weldng eq | Pacific Telephone |
| 1955 | DUFF GORDON INC WLDRS SUPS | R. L. Polk & Co. |

**5930 SAN FERNANDO RD**

| Year | Uses | Source |
|---|---|---|
| 2013 | ASSOCIATED INSTRUMENT PARTS INC | Cole Information Services |

# FINDINGS

| Year | Uses | Source |
|---|---|---|
| 2008 | ASSOCIATED INSTRUMENT PARTS | Cole Information Services |
| 2006 | ASSOCIATED | Haines Company, Inc. |
| | INSTRUMENT PRTS | Haines Company, Inc. |
| 2001 | ASSOCIATED INSTRUMENT PRTS INC | Haines & Company, Inc. |
| 1991 | Associated Instrument Parts Inc | Pacific Bell |
| 1985 | Associated Instrument Parts Inc | Pacific Bell |
| 1981 | SIMMONDS PRECISION PRODUCTS INC GLENDALE | Pacific Telephone |
| 1976 | Glendale Instrument Corp | Pacific Telephone |
| | Glendale Instrument Corp | Pacific Telephone |
| | Shuss Leroy J Glendale Instrument Corp | Pacific Telephone |
| 1972 | COPY METHODS INC COPY DUPLICATING | R. L. Polk & Co. |
| 1971 | Speed O Print Photocopiers & Duplication Copy Methods Inc | Pacific Telephone |
| 1967 | Air Instrument & Supily Corp | Pacific Telephone |
| 1960 | JOHNS SURPLUS | R. L. Polk & Co. |
| 1955 | JOHN S SURPLUS | R. L. Polk & Co. |

**5932 SAN FERNANDO RD**

| Year | Uses | Source |
|---|---|---|
| 2001 | XXXX | Haines & Company, Inc. |
| 1995 | Walnut Cabinet Shop | Pacific Bell |
| | Kemaian Panous | Pacific Bell |
| 1991 | Walnut Cabinet Shop | Pacific Bell |
| 1985 | Gerald L Crawford & Co | Pacific Bell |
| | Crawford Gerald L & Co | Pacific Bell |
| 1975 | Shuss Leroy J Glendale Instrument Corp | Pacific Telephone |
| | GLENDALE INSTRUMENT CORP | Pacific Telephone |
| | GLENDALE INSTRUMENT CORP | Pacific Telephone |
| 1972 | GLENDALE INSTRUMENT CORP AIRCRAFT | R. L. Polk & Co. |
| 1971 | Glendale Instrument Corp | Pacific Telephone |
| | Glendale Instrument Corp | Pacific Telephone |
| 1970 | GLENDALE INSTRUMENT CORP | Pacific Telephone |
| 1967 | Shuss Robt Glendale Instrument Corp | Pacific Telephone |
| | Shuss Leroy J Glendale Instrument Corp | Pacific Telephone |
| | Glendale Instrument Corp | Pacific Telephone |
| | Glendale Instrument Corp | Pacific Telephone |
| 1965 | GLENDALE | Pacific Telephone |

# FINDINGS

| Year | Uses | Source |
|---|---|---|
| 1964 | GLENDALE INSTRUMENT CORP | Pacific Telephone |

**5936 SAN FERNANDO RD**

| Year | Uses | Source |
|---|---|---|
| 1960 | RALPH S TRAILER SIS I | R. L. Polk & Co. |

**5938 SAN FERNANDO RD**

| Year | Uses | Source |
|---|---|---|
| 2013 | UNITED BODY SHOP | Cole Information Services |
| 2008 | UNITED BODY SHOP | Cole Information Services |
| 2006 | UNITD BODY SHOP | Haines Company, Inc. |
| | UNITD BODY SHOP | Haines Company, Inc. |
| 2001 | UNITD BODY SHOP | Haines & Company, Inc. |
| 1995 | United Body Shop | Pacific Bell |
| 1991 | ATAuto Repair | Pacific Bell |
| | United Body Shop | Pacific Bell |
| | From Los Angeles Telephones Call | Pacific Bell |
| | United Jimco | Pacific Bell |
| 1990 | UNITED BODY SHOP GLENDALE | Pacific Bell |
| 1986 | UNITED BODY SHOP GLENDALE | Pacific Bell |
| 1981 | UNITED BODY SHOP GLENDALE | Pacific Telephone |
| 1976 | United Body Shop | Pacific Telephone |
| 1972 | DAVE S AUTO WORKS | R. L. Polk & Co. |

**5940 SAN FERNANDO RD**

| Year | Uses | Source |
|---|---|---|
| 2013 | ART IN PRINTING | Cole Information Services |
| | PRINTING BY HARVEY | Cole Information Services |
| 2008 | PRINTING BY HARVEY | Cole Information Services |
| | CARMELITAS PLACE | Cole Information Services |
| 2006 | HARVEY | Haines Company, Inc. |
| | I BEN | Haines Company, Inc. |
| | PRINTING BY | Haines Company, Inc. |
| 2001 | PRINTING BY HARVEY | Haines & Company, Inc. |
| | HARVEY PRINTING | Haines & Company, Inc. |
| 1991 | One & One Pizza & Deli | Pacific Bell |
| | One &One Pizza & Deli | Pacific Bell |
| 1975 | Austin Ned E Sales & Trade Center | Pacific Telephone |
| | Hoky Sales | Pacific Telephone |

# FINDINGS

| Year | Uses | Source |
|---|---|---|
| 1975 | Sunasu Products Inc | Pacific Telephone |
| 1972 | VACANT | R. L. Polk & Co. |
| 1962 | Accurate Auto Repair | Pacific Telephone |
| 1960 | VACANT | R. L. Polk & Co. |
| 1955 | VACANT | R. L. Polk & Co. |

**6000 SAN FERNANDO RD**

| Year | Uses | Source |
|---|---|---|
| 2013 | AA1 GRAPHICS & SIGNS | Cole Information Services |
| 2008 | AA1 GRAPHICS & STATIONARY | Cole Information Services |
| 2006 | SIGNS | Haines Company, Inc. |
| | AA I GRAPHICS& | Haines Company, Inc. |
| 2001 | SMART Raymond | Haines & Company, Inc. |
| | A A 1 GRAPHICS & SIGNS | Haines & Company, Inc. |
| 1995 | Glendale | Pacific Bell |
| 1991 | Pink Up& Delivery | Pacific Bell |
| | Package Express | Pacific Bell |
| | Glendale | Pacific Bell |
| 1990 | REYHOUND-TRAILWAYS LINES GREYHOUND SUBURBAN BUS STATIONS | Pacific Bell |
| 1985 | Package Express | Pacific Bell |
| | North Hollywood | Pacific Bell |
| | Pick Up & Delivery Service | Pacific Bell |
| | Glendale | Pacific Bell |
| 1975 | Glendale | Pacific Telephone |
| 1972 | GREYHOUND LINES WEST | R. L. Polk & Co. |
| 1955 | RITEWAY CAR CO USED CARS | R. L. Polk & Co. |

**6002 SAN FERNANDO RD**

| Year | Uses | Source |
|---|---|---|
| 2013 | ONTARIO REFRIGERATION | Cole Information Services |
| 2008 | ONTARIO REFRIGERATION | Cole Information Services |
| 2006 | ONTARIO | Haines Company, Inc. |
| | REFRIGERATION | Haines Company, Inc. |
| 2001 | ONTARIO REFRIGERATION | Haines & Company, Inc. |
| 1995 | Ontario Refrigeration Service Inc | Pacific Bell |

# FINDINGS

**6004 SAN FERNANDO RD**

| Year | Uses | Source |
|---|---|---|
| 2013 | VG BAIL BONDS | Cole Information Services |
| | FIRST CLASS MESSENGER SERVICE INC | Cole Information Services |
| 2008 | FIRST CLASS MESSENGER SERVICE INC | Cole Information Services |
| 2006 | REALTY | Haines Company, Inc. |
| | GREEN ISLAND | Haines Company, Inc. |
| 2001 | GREEN ISLAND REALTY | Haines & Company, Inc. |
| 1995 | Eastern Contractors Inc | Pacific Bell |
| | Daves Hairstyling Salon | Pacific Bell |
| 1991 | Eastern Contractors Inc | Pacific Bell |
| | Eastern Demolition & Contracting | Pacific Bell |
| | Eastern M | Pacific Bell |

**6006 SAN FERNANDO RD**

| Year | Uses | Source |
|---|---|---|
| 2008 | ROMART DESIGN | Cole Information Services |
| | CRYSTAL LAKE ENTERTAINMENT PRODUCTIO | Cole Information Services |
| | LOS ANGELES BUILDING SUPPLY | Cole Information Services |
| 2006 | CRYSTAL LK | Haines Company, Inc. |
| | ENTERTNMT | Haines Company, Inc. |
| | PRODUCTNS | Haines Company, Inc. |
| | QUALITYMOBILEVID | Haines Company, Inc. |
| | EO COM | Haines Company, Inc. |
| 2001 | CRYSTAL LK ENTERTNMT PRODUCTNS | Haines & Company, Inc. |
| | CRYSTAL LK ENTERTNMT PRODUCTNS | Haines & Company, Inc. |
| | MAKO SYSTEMS INC | Haines & Company, Inc. |
| 1995 | Masters Contracting Co | Pacific Bell |
| | Masters Contracting Corp | Pacific Bell |
| 1991 | A & BI Engineering Consultants | Pacific Bell |
| | AS BI Fence Enterprises | Pacific Bell |
| | A & BI Structural Engineering | Pacific Bell |
| | AN B Engineering Consultants | Pacific Bell |
| | Allen Stein & Deyer Engineering Consultants | Pacific Bell |
| | Allen Stephen | Pacific Bell |
| | Allen Stephen | Pacific Bell |

# FINDINGS

| Year | Uses | Source |
|---|---|---|
| 1991 | Earthquake Engineering & Construction Specialists | Pacific Bell |
| | LA Seismic Construction Co | Pacific Bell |
| | from Los Angeles Telephones Call | Pacific Bell |
| | LA Sex Information Help Line | Pacific Bell |
| | From Los Angeles Telephones Call | Pacific Bell |
| | Masters Contracting Co | Pacific Bell |
| | Masters Craftsmen Shutters | Pacific Bell |
| | From Santa Clarita Telephones Cael | Pacific Bell |
| 1985 | Fence Mr Inc | Pacific Bell |
| | Fend Victoria | Pacific Bell |
| | Mr Fence Inc | Pacific Bell |
| | Mr Fence Inc | Pacific Bell |
| 1981 | FENCE MR GLENDALE | Pacific Telephone |
| | MR FENCE GLENDALE | Pacific Telephone |
| 1975 | Mr Fence | Pacific Telephone |
| 1972 | HOUSE OF CARS USED CARS | R. L. Polk & Co. |
| 1967 | B & D Motors usd trks | Pacific Telephone |
| 1962 | B & D Motors usd trks | Pacific Telephone |
| 1960 | B&D MTRS USED CARS | R. L. Polk & Co. |
| 1955 | B & D MOTORS USED CARS | R. L. Polk & Co. |

**6008 SAN FERNANDO RD**

| Year | Uses | Source |
|---|---|---|
| 2013 | QUALITYMOBILEVIDEO COM | Cole Information Services |
| 2008 | QUALITY MOBILE VIDEO | Cole Information Services |
| 2001 | HI FI SETS INC | Haines & Company, Inc. |
| 1995 | Hi FI Sets Inc | Pacific Bell |
| 1991 | Hi FI S OUN D MART DIS COUN T HOUS E | Pacific Bell |
| | Hi FI Sets Inc | Pacific Bell |

**6010 SAN FERNANDO RD**

| Year | Uses | Source |
|---|---|---|
| 2013 | M & M SHOP | Cole Information Services |
| 2008 | M & M SHOP | Cole Information Services |
| 2006 | M & M SHOP | Haines Company, Inc. |
| | WELDNG | Haines Company, Inc. |
| 2001 | M&M SHOP | Haines & Company, Inc. |
| | M&M WELDING | Haines & Company, Inc. |

# FINDINGS

| Year | Uses | Source |
|---|---|---|
| 2001 | MCGINLEY Patrick | Haines & Company, Inc. |
| 1995 | M& N Set Service | Pacific Bell |
| | weldng | Pacific Bell |
| | M&MTrucking | Pacific Bell |
| | I N & M Welding | Pacific Bell |
| 1991 | M&M S HOP weldng | Pacific Bell |
| | N & N Welding | Pacific Bell |
| 1986 | M & M SHOP GLENDALE | Pacific Bell |
| 1985 | M & M S HOP weldng | Pacific Bell |
| | M & M Welding | Pacific Bell |
| 1981 | M & M SHOP GLENDALE | Pacific Telephone |
| 1975 | M & M SHOP weldng | Pacific Telephone |
| 1972 | M & M SHOP WLDRS | R. L. Polk & Co. |
| 1955 | BOB S SERV AUTO REPR | R. L. Polk & Co. |

**6020 SAN FERNANDO RD**

| Year | Uses | Source |
|---|---|---|
| 1972 | VACANT | R. L. Polk & Co. |
| 1955 | COURTESY COVER CO AUTO UPHOL | R. L. Polk & Co. |

**6026 SAN FERNANDO RD**

| Year | Uses | Source |
|---|---|---|
| 2001 | WILLIAM PHETTEPLAZE | Haines & Company, Inc. |
| 1991 | ATLAS S CAFFOLD CORP | Pacific Bell |
| | Atlas Security GHis | Pacific Bell |
| | Phetteplace Wm W Atlas Scaffold Corp | Pacific Bell |
| 1990 | ATLAS SCAFFOLD CORP GLENDALE | Pacific Bell |
| | PHETTEPLACE WM W ATLAS SCAFFOLD CORP GLENDALE | Pacific Bell |
| 1986 | ATLAS SCAFFOLD CORP GLENDALE | Pacific Bell |
| | PHETTEPLACE WM W ATLAS SCAFFOLD CORP GLENDALE | Pacific Bell |
| 1985 | phetteplace Wm W Atlas Scaffold Corp | Pacific Bell |
| 1981 | ATLAS SCAFFOLD CORP GLENDALE | Pacific Telephone |
| | PHETTEPLACE WM W ATLAS SCAFFOLD CORP GLENDALE | Pacific Telephone |
| 1976 | Atlas Scaffold Corp | Pacific Telephone |
| | Petteplace Wm W Atlas Scaffold Corp | Pacific Telephone |
| 1975 | ATLAS SCAFFOLD CORP | Pacific Telephone |
| | Phetteplace Wm W Atlas Scaffold Corp | Pacific Telephone |

# FINDINGS

| Year | Uses | Source |
|---|---|---|
| 1972 | ATLAS SCAFFOLD CORP SCAFFOLDS | R. L. Polk & Co. |
| 1971 | Atlas Scaffold Corp | Pacific Telephone |
| | Phetteplace Wm W Atlas Scaffold Corp | Pacific Telephone |
| 1967 | ATLAS SCAFFOLD CORP | Pacific Telephone |
| | Phetteplace Wm W Atlas Scaffold Corp | Pacific Telephone |
| 1962 | Phetteplace Scaffold Co Advance Scaffold Div | Pacific Telephone |
| 1960 | PHCTTE-JLNER 5LAFFTELHL CE | R. L. Polk & Co. |
| 1955 | PHETTEPLACE SCAFFOLD CO | R. L. Polk & Co. |

**6034 SAN FERNANDO RD**

| Year | Uses | Source |
|---|---|---|
| 2013 | UNIQUE PARTY RENTALS | Cole Information Services |
| 2008 | PREMIUM HVAC | Cole Information Services |
| | UNIQUE PARTY RENTALS | Cole Information Services |
| 2006 | RENTALS | Haines Company, Inc. |
| | UNIQUEPARTY | Haines Company, Inc. |
| 2001 | PRIORITY ONE | Haines & Company, Inc. |
| 1991 | Conquest | Pacific Bell |
| | Conoway & Son Painting | Pacific Bell |
| | Conoyer D Northridge | Pacific Bell |
| | From Los Angeles Telephones Call | Pacific Bell |
| 1990 | CONOWAY & SON PAINTING GLENDALE | Pacific Bell |
| 1986 | CONOWAY & SON PAINTING GLENDALE | Pacific Bell |
| 1985 | B & N ME TAL S PIN N IN G | Pacific Bell |

**6036 SAN FERNANDO RD**

| Year | Uses | Source |
|---|---|---|
| 2013 | 3D MASS DESIGN & ENGINEERING | Cole Information Services |
| 2008 | MOTION TECHNOLOGIES | Cole Information Services |
| | 3D MASS DESIGN & ENGINEERING | Cole Information Services |
| 2006 | AND ENGINEERING | Haines Company, Inc. |
| | 3D MASS DESIGN | Haines Company, Inc. |
| 2001 | FIRE CODE | Haines & Company, Inc. |
| 1995 | Columbia Business Forms Inc | Pacific Bell |
| | i Columbia Cosmetics Mfg Inc | Pacific Bell |
| 1991 | Columbia Cosmetics Mfg Inc | Pacific Bell |
| 1985 | Columbia Cosmetics Mfg Inc | Pacific Bell |

# FINDINGS

| Year | Uses | Source |
|---|---|---|
| 1981 | AUERBACH NORMAN & ASSOCIATES GLENDALE | Pacific Telephone |

**6038 SAN FERNANDO RD**

| Year | Uses | Source |
|---|---|---|
| 2008 | THE COMPUTER FACTORY LLC | Cole Information Services |
| 2001 | VOGUE LIMOUSINE | Haines & Company, Inc. |
| 1995 | Barton Co | Pacific Bell |
| 1991 | Hi Tech TFe Protection Inc | Pacific Bell |
| 1985 | High Rise Service Co | Pacific Bell |
| 1976 | Poloni Rodolfo V grmont mfg | Pacific Telephone |
| 1955 | VACANT | R. L. Polk & Co. |

**6040 SAN FERNANDO RD**

| Year | Uses | Source |
|---|---|---|
| 2008 | THE HOOKAH | Cole Information Services |
| 2006 | THE HOOKAH | Haines Company, Inc. |
| 2001 | HYBRID SYSTEMS | Haines & Company, Inc. |
| 1995 | One Day Sign | Pacific Bell |
| 1972 | JUNIOR HOUSE OF SUHRIE PRNTR | R. L. Polk & Co. |
| 1967 | Fox Mac Kay | Pacific Telephone |
| 1958 | Doran G C | Pacific Telephone |
| 1955 | VACANT | R. L. Polk & Co. |

**6042 SAN FERNANDO RD**

| Year | Uses | Source |
|---|---|---|
| 2013 | TOPLINE BUILDERS | Cole Information Services |
| 2008 | TOPLINE BUILDERS | Cole Information Services |
| 2006 | TOPUNE BUILDERS | Haines Company, Inc. |
| 2001 | XXXX | Haines & Company, Inc. |
| 1995 | Communications Contractors | Pacific Bell |
| 1985 | Bob Welch Electric | Pacific Bell |

**6044 SAN FERNANDO RD**

| Year | Uses | Source |
|---|---|---|
| 2013 | SERV EASE | Cole Information Services |
| 2006 | SYSTEMS INC | Haines Company, Inc. |
| | SERV EASEOFFICE | Haines Company, Inc. |
| 2001 | PURE AIR MECHANICAL | Haines & Company, Inc. |
| 1995 | Kars Design Studio | Pacific Bell |

# FINDINGS

| Year | Uses | Source |
|---|---|---|
| 1990 | TORTILLERIA RAMOS GLENDALE | Pacific Bell |
| 1986 | TORTILLERIA RAMOS GLENDALE | Pacific Bell |
| 1981 | TORTILLERIA RAMOS GLENDALE | Pacific Telephone |
| 1976 | Tortilleria Ramos | Pacific Telephone |
| 1975 | Plasti Form Co | Pacific Telephone |
| 1972 | PLASTI-FORM CO PLASTICS FABRICATING | R. L. Polk & Co. |
| 1960 | SHADE SCREEN SIS CO | R. L. Polk & Co. |
| 1958 | Shade Screen Sales Co | Pacific Telephone |

**6046 SAN FERNANDO RD**

| Year | Uses | Source |
|---|---|---|
| 2013 | TOM SYMS REFINISHING | Cole Information Services |
| 2008 | DIGITAL 2 POP PRODUCTIONS INC | Cole Information Services |
| 2001 | XXXX | Haines & Company, Inc. |
| 1991 | Barbara Gresham Advertising Specialties | Pacific Bell |
| 1972 | DECORATIVE METAL SPECIALTIES | R. L. Polk & Co. |
| 1955 | COAST CRAFTS ENDUSTRIEL PLAS-TICS | R. L. Polk & Co. |

**6048 SAN FERNANDO RD**

| Year | Uses | Source |
|---|---|---|
| 2013 | A & D OFFICE SYSTEMS | Cole Information Services |
| 2008 | A & D OFFICE SYSTEMS | Cole Information Services |
| 2006 | OFC SYSTEM | Haines Company, Inc. |
| | AANALOG& DIGITAL | Haines Company, Inc. |
| 2001 | XXXX | Haines & Company, Inc. |
| 1995 | Wang Arne Litho | Pacific Bell |
| | Arne Wang Litho | Pacific Bell |
| 1985 | Wang Arne Litho | Pacific Bell |
| | Wang Bobby | Pacific Bell |
| | Wang C | Pacific Bell |
| 1972 | HARLOW JAMES HOBBY SHOP | R. L. Polk & Co. |
| 1971 | Printers Free Shopper Inc | Pacific Telephone |
| 1962 | Doran G C | Pacific Telephone |
| 1960 | DORAN GAYLORD C FIRE SCREENS C | R. L. Polk & Co. |
| 1955 | DORAN GAYLORD C FIRE SCREENS | R. L. Polk & Co. |

# FINDINGS

**6050 SAN FERNANDO RD**

| Year | Uses | Source |
|---|---|---|
| 2013 | GM BUSINESS INC | Cole Information Services |
| 2008 | WALLY BALLS | Cole Information Services |
| 2001 | WALLY BALLS | Haines & Company, Inc. |
| 1995 | Classic Print | Pacific Bell |
| 1991 | CLAS S IC PRIN T | Pacific Bell |
| 1985 | CLAS S IC PRIN T | Pacific Bell |

**6052 SAN FERNANDO RD**

| Year | Uses | Source |
|---|---|---|
| 2013 | COMPUTER FACTORY THE | Cole Information Services |
| 2008 | JAAM E JAM SHABANEH TV | Cole Information Services |
| 2001 | CALIFORNIA MARQUEE | Haines & Company, Inc. |
| 1985 | Wesco Industrial Plastics Co | Pacific Bell |

**6054 SAN FERNANDO RD**

| Year | Uses | Source |
|---|---|---|
| 2008 | JAAM E JAM SHABANE H TV | Cole Information Services |
| | EASY COMMUNICATIONS | Cole Information Services |
| | L A VIEW TV PRODUCTIONS | Cole Information Services |
| 2006 | PRODUCTIONS | Haines Company, Inc. |
| | JAAMEJAM | Haines Company, Inc. |
| | SHABANE HTV LAVIEWTV | Haines Company, Inc. |
| 2001 | ATANIAN ART STUDIO | Haines & Company, Inc. |
| 1995 | V Vaswani Shyam | Pacific Bell |
| | g Taf Art Studio | Pacific Bell |
| 1991 | Artoonian Esralel | Pacific Bell |
| | Artoon & Sons Iron | Pacific Bell |
| 1986 | MAXON A DIVISION OF GROBET FILE CO F GLENDALE | Pacific Bell |
| | GROBET FILE CO OF AMERICA INC GLENDALE | Pacific Bell |
| 1981 | MAXON A DIVISION OF GROBET FILE CO GLENDALE | Pacific Telephone |
| | GROBET FILE CO OF AMERICA INC GLENDALE | Pacific Telephone |
| 1976 | Grobet File Co Of America Inc | Pacific Telephone |

**6056 SAN FERNANDO RD**

| Year | Uses | Source |
|---|---|---|
| 2013 | UNIQUE PICTURE FRAMING | Cole Information Services |

# FINDINGS

| Year | Uses | Source |
|---|---|---|
| 2008 | UNIQUE PICTURE FRAMING | Cole Information Services |
| 2006 | FRAMING | Haines Company, Inc. |
| | UNIQUEPICTURE | Haines Company, Inc. |
| 2001 | UNIQUE PICTURE FRAMING | Haines & Company, Inc. |
| 1995 | Alpine Electric Motors | Pacific Bell |
| 1991 | Alpine Electric Motors | Pacific Bell |

**6058 SAN FERNANDO RD**

| Year | Uses | Source |
|---|---|---|
| 2013 | WINDOW TINTS EVERYTHING | Cole Information Services |
| 2008 | KINGS MACHINE SHOP | Cole Information Services |
| | POWER FLOW TECHNOLOGY INC | Cole Information Services |
| | MAILAN INDUSTRIES | Cole Information Services |
| 2006 | TECHNOLOGY INC | Haines Company, Inc. |
| | POWERFLOW | Haines Company, Inc. |
| 2001 | XXXX | Haines & Company, Inc. |
| 1995 | Yosef Amzalag Supply | Pacific Bell |
| 1991 | Briggs La & Mi Tuj | Pacific Bell |
| | Briggs L T Construction | Pacific Bell |
| 1975 | Hudson Trailer Sales | Pacific Telephone |
| 1972 | HUDSON TRAILER SALES | R. L. Polk & Co. |
| 1960 | PETE S RICHFIELD SERV | R. L. Polk & Co. |
| 1955 | NASH AUBREY C RICHFIELD SERV | R. L. Polk & Co. |

**6060 SAN FERNANDO RD**

| Year | Uses | Source |
|---|---|---|
| 2008 | MAC GRAPHICS | Cole Information Services |
| 2006 | RUBICO INC | Haines Company, Inc. |
| | MAC GRAPHICS | Haines Company, Inc. |
| | E DUNN | Haines Company, Inc. |
| 2001 | MATE COMPANY THE | Haines & Company, Inc. |
| 1991 | Grandvlew Glass & Mirror | Pacific Bell |

**6062 SAN FERNANDO RD**

| Year | Uses | Source |
|---|---|---|
| 2013 | GRANDVIEW GLASS | Cole Information Services |
| 2008 | GRANDVIEW INDUSTRIES INC | Cole Information Services |
| 2006 | GLASS&MIRROR | Haines Company, Inc. |
| | GRANDVIEW | Haines Company, Inc. |

# FINDINGS

| Year | Uses | Source |
|---|---|---|
| 2001 | GRANDVIEW GLASS & MIRROR | Haines & Company, Inc. |
| 1991 | Dalton Technology | Pacific Bell |
| | Dalton Tim | Pacific Bell |
| 1985 | J V Air | Pacific Bell |

## SAN FRNDO RD

### 5924 SAN FRNDO RD

| Year | Uses | Source |
|---|---|---|
| 1975 | DUFF GORDON INC WELDNG EQUIP | Pacific Telephone |
| | GORDON DUFF INC WELDNG EQUIP | Pacific Telephone |
| 1966 | GORDON DUFF INC WELDNG EUIP | Pacific Telephone |
| 1960 | DUFF GORDON INC WELDNG EQUIP | Pacific Telephone |
| | GORDON DUFF INC WELDNG EQUIP | Pacific Telephone |

### 5930 SAN FRNDO RD

| Year | Uses | Source |
|---|---|---|
| 1975 | SPEED-O-PRINT PHOTOCOPIERS & DUPLICATORS COPY METHODS INC | Pacific Telephone |

### 5932 SAN FRNDO RD

| Year | Uses | Source |
|---|---|---|
| 1975 | GLENDALE INSTRUMENT CORP GLENDALE | Pacific Telephone |
| 1966 | GLENDALE INSTRUMENT CORP | Pacific Telephone |

### 6044 SAN FRNDO RD

| Year | Uses | Source |
|---|---|---|
| 1960 | SHADE SCREEN SALES CO | Pacific Telephone |
| 1957 | SHADE SCREEN SALES CO | Pacific Telephone |

## W SAN FERNANDO RD

### 5969 W SAN FERNANDO RD

| Year | Uses | Source |
|---|---|---|
| 1976 | Thermal Enginering & Equip Co | Pacific Telephone |

## ZOOK DR

### 930 ZOOK DR

| Year | Uses | Source |
|---|---|---|
| 2001 | BARONE Michael A | Haines & Company, Inc. |
| 1975 | Max A J | Pacific Telephone |
| | Dulzaides Arturo | Pacific Telephone |
| 1972 | EDWARDS BETTY L | R. L. Polk & Co. |
| 1967 | MAYNARD EDITH MRS | R. L. Polk & Co. |
| 1962 | WISMER HENRY D | Pacific Telephone |
| 1960 | WISMER HENRY D | R. L. Polk & Co. |
| 1956 | ANKROM FREDA | Pacific Telephone |
| 1955 | ANKRON FRIEDA MRS | R. L. Polk & Co. |
| 1950 | JANDER MARGARET E MRS R | Pacific Telephone |
| | JANDER MARGARET E MRS R | Pacific Telephone |

### 932 ZOOK DR

| Year | Uses | Source |
|---|---|---|
| 2001 | XXXX | Haines & Company, Inc. |
| 1980 | NARINIAN A | Pacific Telephone |
| 1972 | TRUJILLO MARTHA M MRS | R. L. Polk & Co. |
| 1967 | NO RETURN | R. L. Polk & Co. |
| 1960 | ANKRON FREDA MRS | R. L. Polk & Co. |
| 1956 | SAENZ FRED | Pacific Telephone |
| 1955 | SAENZ FRED A | R. L. Polk & Co. |

### 934 ZOOK DR

| Year | Uses | Source |
|---|---|---|
| 2006 | STEPANYANAina | Haines  Company, Inc. |
| | Z 4 RGARIANKrisona | Haines  Company, Inc. |
| 2001 | STEPANYAN Alina | Haines & Company, Inc. |
| 1972 | LEWIS MARTHA A MRS | R. L. Polk & Co. |
| 1970 | LEWIS MARTHA ANN | Pacific Telephone |
| | LEWIS MARTHA ANN | Pacific Telephone |
| 1967 | LEWIS MARTHA A MRS S | R. L. Polk & Co. |
| 1962 | LEWIS MARTHA ANN | Pacific Telephone |
| 1960 | LEWIS MARTA | R. L. Polk & Co. |
| | LEWIS MARTHA A MRS | R. L. Polk & Co. |
| 1956 | LEWIS MARTHA ANN | Pacific Telephone |
| 1955 | LEWIS MARTHA A MRS | R. L. Polk & Co. |

# FINDINGS

| Year | Uses | Source |
|---|---|---|
| 1950 | BENNER DAN R | Pacific Telephone |
| | BENNER DAN R | Pacific Telephone |

**938 ZOOK DR**

| Year | Uses | Source |
|---|---|---|
| 2006 | DOMATeodora | Haines Company, Inc. |
| | ALEXANDER Robert | Haines Company, Inc. |
| 2001 | ALEXANDER E S Jr | Haines & Company, Inc. |
| 1995 | Alexander E S Jr | Pacific Bell |
| 1985 | Alexander E S Jr | Pacific Bell |
| | Alexander Earl L | Pacific Bell |
| | Alexander Edw m | Pacific Bell |
| 1980 | ALEXANDER E S JR | Pacific Telephone |
| 1975 | Alexander E S Jr | Pacific Telephone |
| 1972 | ALEXANDER ELLIS S JR | R. L. Polk & Co. |
| 1970 | ALEXANDER E S JR | Pacific Telephone |
| | ALEXANDER E S JR | Pacific Telephone |
| 1967 | ALEXANDER ELLIS S JR A | R. L. Polk & Co. |
| 1962 | ALEXANDER E S JR | Pacific Telephone |
| 1960 | ALEXANDER ELLIS S JR | R. L. Polk & Co. |
| 1956 | ALEXANDER E S JR R | Pacific Telephone |
| 1955 | ALEXANDER ELLIS S JR | R. L. Polk & Co. |
| 1950 | ALEXANDER E S JR R | Pacific Telephone |
| | ALEXANDER E S JR R | Pacific Telephone |

**944 ZOOK DR**

| Year | Uses | Source |
|---|---|---|
| 2006 | ZADOURIAN Alfred | Haines Company, Inc. |
| 2001 | HERNANDEZ Carlos | Haines & Company, Inc. |
| 1972 | KITCHEN JOHN | R. L. Polk & Co. |
| 1970 | PARK ALLYN S | Pacific Telephone |
| | PARK ALLYN S | Pacific Telephone |
| 1967 | PARK ALLYN S | R. L. Polk & Co. |
| 1962 | PARK ALLYN S | Pacific Telephone |
| 1960 | PARK ALLYN S | R. L. Polk & Co. |
| 1956 | PARK ALLYN S | Pacific Telephone |
| 1950 | WATKINS INA R | Pacific Telephone |
| | WATKINS INA R | Pacific Telephone |

# FINDINGS

**948 ZOOK DR**

| Year | Uses | Source |
|---|---|---|
| 2006 | DRUMMOND Robt | Haines Company, Inc. |
| 2001 | DRUMMOND Robt | Haines & Company, Inc. |
| 1995 | Drummond Robt | Pacific Bell |
| 1991 | Drummond Robt | Pacific Bell |
| 1985 | Drummond Robt | Pacific Bell |
| 1980 | PAMBRUN GORDON G | Pacific Telephone |
| 1975 | Preston Jas C | Pacific Telephone |
| 1972 | PRESTON JAMES C | R. L. Polk & Co. |
| 1970 | PRESTON JAS C | Pacific Telephone |
| | PRESTON JAS C | Pacific Telephone |
| 1967 | PRESTON JAMES C | R. L. Polk & Co. |
| 1962 | PRESTON JAS C | Pacific Telephone |
| 1960 | PRESTON JAS C | R. L. Polk & Co. |
| 1956 | PRESTON JAS C | Pacific Telephone |
| 1955 | PRESTON JAS C A | R. L. Polk & Co. |
| 1950 | GUBSER A W R | Pacific Telephone |
| | GUBSER A W R | Pacific Telephone |

**1000 ZOOK DR**

| Year | Uses | Source |
|---|---|---|
| 2006 | &LEWIS Mary Ann | Haines Company, Inc. |
| | o LEWIS Jas | Haines Company, Inc. |
| 2001 | LEWIS Mary Ann | Haines & Company, Inc. |
| | LEWIS JAS | Haines & Company, Inc. |
| 1991 | Lewis Jas & Mary Ann | Pacific Bell |
| 1985 | Lewis Jas & Mary Ann | Pacific Bell |
| 1980 | LEWIS JAS & MARY ANN | Pacific Telephone |
| 1972 | TAYLOR MARY A MRS | R. L. Polk & Co. |
| 1970 | TAYLOR MARY ANN | Pacific Telephone |
| | TAYLOR MARY ANN | Pacific Telephone |
| 1967 | TAYLOR JOHNNY B | R. L. Polk & Co. |
| 1962 | MCFADDEN WM K | Pacific Telephone |
| 1960 | MCFADDEN WM K | R. L. Polk & Co. |
| 1956 | BECHELY FRANCIS C | Pacific Telephone |
| 1955 | BEACHELY FRANCIS C | R. L. Polk & Co. |
| 1950 | KOUF MARVIN J R | Pacific Telephone |
| | KOUF MARVIN J R | Pacific Telephone |

# FINDINGS

**1006 ZOOK DR**

| Year | Uses | Source |
|---|---|---|
| 1972 | ROWAN GEO C III | R. L. Polk & Co. |
| 1960 | SCHULTZ JOHN T | R. L. Polk & Co. |
| 1955 | MEEKA PETER A | R. L. Polk & Co. |

**930 1/2 ZOOK DR**

| Year | Uses | Source |
|---|---|---|
| 1980 | COOK JAS | Pacific Telephone |
| 1972 | ROBINSON PAMELA J | R. L. Polk & Co. |
| 1967 | MENDOZA ROMAN | R. L. Polk & Co. |
| 1960 | GAINES OLIVE MRS | R. L. Polk & Co. |
| 1956 | WILDER HOLLIS K | Pacific Telephone |
| 1955 | WILDER HOLLIS | R. L. Polk & Co. |

## ZOOK DR W

**930 ZOOK DR W**

| Year | Uses | Source |
|---|---|---|
| 1945 | DONALD BANDY | The Glendale Directory Co. |

**934 ZOOK DR W**

| Year | Uses | Source |
|---|---|---|
| 1945 | S A MCSWEEN | The Glendale Directory Co. |
| 1940 | S A MACSWEEN | Glendale Directory Co. |

**938 ZOOK DR W**

| Year | Uses | Source |
|---|---|---|
| 1945 | E S ALEXANDER JR | The Glendale Directory Co. |

**944 ZOOK DR W**

| Year | Uses | Source |
|---|---|---|
| 1945 | INA L WATKINS | The Glendale Directory Co. |
| 1940 | W J SIELERT | Glendale Directory Co. |

**948 ZOOK DR W**

| Year | Uses | Source |
|---|---|---|
| 1945 | A W GUBSER R | The Glendale Directory Co. |
| 1940 | F B ASHWORTH | Glendale Directory Co. |

# FINDINGS

**1000 ZOOK DR W**

| Year | Uses | Source |
|---|---|---|
| 1945 | G A WELSHOFER JR O | The Glendale Directory Co. |
| 1940 | LUOG W R CRAPO | Glendale Directory Co. |

**1006 ZOOK DR W**

| Year | Uses | Source |
|---|---|---|
| 1945 | H C DENNIS | The Glendale Directory Co. |
| 1940 | W W CRAWFORD | Glendale Directory Co. |

# FINDINGS

## TARGET PROPERTY: ADDRESS NOT IDENTIFIED IN RESEARCH SOURCE

The following Target Property addresses were researched for this report, and the addresses were not identified in the research source.

| Address Researched | Address Not Identified in Research Source |
|---|---|
| 800 Air Way | 2013, 2008, 2006, 2004, 2003, 2001, 2000, 1999, 1996, 1995, 1992, 1991, 1990, 1986, 1985, 1981, 1980, 1976, 1975, 1972, 1971, 1969, 1966, 1965, 1964, 1963, 1961, 1960, 1958, 1957, 1956, 1955, 1954, 1952, 1951, 1950, 1949, 1948, 1947, 1946, 1945, 1944, 1942, 1940, 1939, 1938, 1937, 1936, 1935, 1934, 1933, 1932, 1931, 1930, 1929, 1928, 1927, 1926, 1925, 1924, 1923, 1921, 1920 |

## ADJOINING PROPERTY: ADDRESSES NOT IDENTIFIED IN RESEARCH SOURCE

The following Adjoining Property addresses were researched for this report, and the addresses were not identified in research source.

| Address Researched | Address Not Identified in Research Source |
|---|---|
| 1000 AIR WAY | 2006, 2004, 2003, 2001, 2000, 1999, 1996, 1995, 1992, 1991, 1990, 1986, 1985, 1981, 1980, 1976, 1975, 1972, 1971, 1970, 1969, 1967, 1966, 1965, 1964, 1963, 1962, 1961, 1960, 1958, 1957, 1956, 1955, 1954, 1952, 1951, 1950, 1949, 1948, 1947, 1946, 1945, 1944, 1942, 1940, 1939, 1938, 1937, 1936, 1935, 1934, 1933, 1932, 1931, 1930, 1929, 1928, 1927, 1926, 1925, 1924, 1923, 1921, 1920 |
| 1000 AIR WAY | 2013, 2008, 2004, 2003, 2000, 1999, 1996, 1992, 1990, 1986, 1985, 1981, 1976, 1969, 1966, 1965, 1964, 1963, 1962, 1961, 1958, 1957, 1955, 1954, 1952, 1951, 1950, 1949, 1948, 1947, 1946, 1945, 1944, 1942, 1940, 1939, 1938, 1937, 1936, 1935, 1934, 1933, 1932, 1931, 1930, 1929, 1928, 1927, 1926, 1925, 1924, 1923, 1921, 1920 |
| 1000 ZOOK DR | 2013, 2008, 2004, 2003, 2000, 1999, 1996, 1995, 1992, 1990, 1986, 1981, 1976, 1975, 1971, 1969, 1966, 1965, 1964, 1963, 1961, 1958, 1957, 1954, 1952, 1951, 1949, 1948, 1947, 1946, 1945, 1944, 1942, 1940, 1939, 1938, 1937, 1936, 1935, 1934, 1933, 1932, 1931, 1930, 1929, 1928, 1927, 1926, 1925, 1924, 1923, 1921, 1920 |
| 1000 ZOOK DR W | 2013, 2008, 2006, 2004, 2003, 2001, 2000, 1999, 1996, 1995, 1992, 1991, 1990, 1986, 1985, 1981, 1980, 1976, 1975, 1972, 1971, 1970, 1969, 1967, 1966, 1965, 1964, 1963, 1962, 1961, 1960, 1958, 1957, 1956, 1955, 1954, 1952, 1951, 1950, 1949, 1948, 1947, 1946, 1944, 1942, 1939, 1938, 1937, 1936, 1935, 1934, 1933, 1932, 1931, 1930, 1929, 1928, 1927, 1926, 1925, 1924, 1923, 1921, 1920 |
| 1006 ZOOK DR | 2013, 2008, 2006, 2004, 2003, 2001, 2000, 1999, 1996, 1995, 1992, 1991, 1990, 1986, 1985, 1981, 1980, 1976, 1975, 1971, 1970, 1969, 1967, 1966, 1965, 1964, 1963, 1962, 1961, 1958, 1957, 1956, 1954, 1952, 1951, 1950, 1949, 1948, 1947, 1946, 1945, 1944, 1942, 1940, 1939, 1938, 1937, 1936, 1935, 1934, 1933, 1932, 1931, 1930, 1929, 1928, 1927, 1926, 1925, 1924, 1923, 1921, 1920 |
| 1006 ZOOK DR W | 2013, 2008, 2006, 2004, 2003, 2001, 2000, 1999, 1996, 1995, 1992, 1991, 1990, 1986, 1985, 1981, 1980, 1976, 1975, 1972, 1971, 1970, 1969, 1967, 1966, 1965, 1964, 1963, 1962, 1961, 1960, 1958, 1957, 1956, 1955, 1954, 1952, 1951, 1950, 1949, 1948, 1947, 1946, 1944, 1942, 1939, 1938, 1937, 1936, 1935, 1934, 1933, 1932, 1931, 1930, 1929, 1928, 1927, 1926, 1925, 1924, 1923, 1921, 1920 |
| 1007 AIR WAY | 2013, 2008, 2006, 2004, 2003, 2001, 2000, 1999, 1996, 1992, 1991, 1990, 1986, 1985, 1981, 1980, 1976, 1971, 1969, 1966, 1965, 1964, 1963, 1962, 1961, 1960, 1958, 1957, 1955, 1954, 1952, 1951, 1949, 1948, 1947, 1946, 1945, 1944, 1942, 1940, 1939, 1938, 1937, 1936, 1935, 1934, 1933, 1932, 1931, 1930, 1929, 1928, 1927, 1926, 1925, 1924, 1923, 1921, 1920 |

# FINDINGS

| Address Researched | Address Not Identified in Research Source |
|---|---|
| 1011 GRAND CENTRAL AVE | 2013, 2008, 2006, 2004, 2003, 2000, 1999, 1996, 1992, 1985, 1975, 1970, 1969, 1967, 1966, 1965, 1964, 1963, 1962, 1961, 1960, 1958, 1957, 1956, 1955, 1954, 1952, 1951, 1950, 1949, 1948, 1947, 1946, 1945, 1944, 1942, 1940, 1939, 1938, 1937, 1936, 1935, 1934, 1933, 1932, 1931, 1930, 1929, 1928, 1927, 1926, 1925, 1924, 1923, 1921, 1920 |
| 1011 GRAND CENTRAL AVE | 2013, 2006, 2004, 2003, 2001, 2000, 1999, 1996, 1995, 1992, 1991, 1990, 1986, 1985, 1981, 1980, 1976, 1975, 1972, 1971, 1970, 1969, 1967, 1966, 1965, 1964, 1963, 1962, 1961, 1960, 1958, 1957, 1956, 1955, 1954, 1952, 1951, 1950, 1949, 1948, 1947, 1946, 1945, 1944, 1942, 1940, 1939, 1938, 1937, 1936, 1935, 1934, 1933, 1932, 1931, 1930, 1929, 1928, 1927, 1926, 1925, 1924, 1923, 1921, 1920 |
| 1014 GRAND CENTRAL AVE | 2013, 2008, 2006, 2004, 2003, 2000, 1999, 1996, 1992, 1991, 1975, 1969, 1966, 1965, 1964, 1963, 1962, 1961, 1960, 1958, 1957, 1956, 1955, 1954, 1952, 1951, 1950, 1949, 1948, 1947, 1946, 1945, 1944, 1942, 1940, 1939, 1938, 1937, 1936, 1935, 1934, 1933, 1932, 1931, 1930, 1929, 1928, 1927, 1926, 1925, 1924, 1923, 1921, 1920 |
| 1020 AIR WAY | 2013, 2008, 2006, 2004, 2003, 2001, 2000, 1999, 1996, 1995, 1992, 1991, 1990, 1986, 1985, 1981, 1976, 1969, 1967, 1966, 1965, 1964, 1963, 1962, 1961, 1960, 1958, 1957, 1956, 1955, 1954, 1952, 1951, 1950, 1949, 1948, 1947, 1946, 1945, 1944, 1942, 1940, 1939, 1938, 1937, 1936, 1935, 1934, 1933, 1932, 1931, 1930, 1929, 1928, 1927, 1926, 1925, 1924, 1923, 1921, 1920 |
| 1020 AIR WAY | 2013, 2006, 2004, 2003, 2001, 2000, 1999, 1996, 1995, 1992, 1991, 1990, 1986, 1985, 1981, 1980, 1976, 1975, 1972, 1971, 1970, 1969, 1967, 1966, 1965, 1964, 1963, 1962, 1961, 1960, 1958, 1957, 1956, 1955, 1954, 1952, 1951, 1950, 1949, 1948, 1947, 1946, 1945, 1944, 1942, 1940, 1939, 1938, 1937, 1936, 1935, 1934, 1933, 1932, 1931, 1930, 1929, 1928, 1927, 1926, 1925, 1924, 1923, 1921, 1920 |
| 1021 AIR WAY | 2013, 2006, 2004, 2003, 2001, 2000, 1999, 1996, 1995, 1992, 1991, 1990, 1986, 1985, 1981, 1980, 1976, 1975, 1972, 1971, 1970, 1969, 1967, 1966, 1965, 1964, 1963, 1962, 1961, 1960, 1958, 1957, 1956, 1955, 1954, 1952, 1951, 1950, 1949, 1948, 1947, 1946, 1945, 1944, 1942, 1940, 1939, 1938, 1937, 1936, 1935, 1934, 1933, 1932, 1931, 1930, 1929, 1928, 1927, 1926, 1925, 1924, 1923, 1921, 1920 |
| 1021 AIR WAY | 2013, 2008, 2004, 2003, 2000, 1999, 1996, 1995, 1992, 1991, 1990, 1986, 1985, 1981, 1980, 1976, 1969, 1967, 1966, 1965, 1964, 1963, 1962, 1961, 1960, 1958, 1957, 1956, 1955, 1954, 1952, 1951, 1950, 1949, 1948, 1947, 1946, 1945, 1944, 1942, 1940, 1939, 1938, 1937, 1936, 1935, 1934, 1933, 1932, 1931, 1930, 1929, 1928, 1927, 1926, 1925, 1924, 1923, 1921, 1920 |
| 1024 GRAND CENTRAL | 2013, 2008, 2006, 2004, 2003, 2001, 2000, 1999, 1996, 1995, 1992, 1991, 1985, 1981, 1980, 1976, 1975, 1972, 1971, 1970, 1969, 1967, 1966, 1965, 1964, 1963, 1962, 1961, 1960, 1958, 1957, 1956, 1955, 1954, 1952, 1951, 1950, 1949, 1948, 1947, 1946, 1945, 1944, 1942, 1940, 1939, 1938, 1937, 1936, 1935, 1934, 1933, 1932, 1931, 1930, 1929, 1928, 1927, 1926, 1925, 1924, 1923, 1921, 1920 |
| 1024 GRAND CENTRAL AVE | 2013, 2008, 2006, 2004, 2003, 2000, 1999, 1996, 1995, 1992, 1991, 1990, 1986, 1985, 1981, 1980, 1976, 1975, 1972, 1971, 1970, 1969, 1967, 1966, 1965, 1964, 1963, 1962, 1961, 1960, 1958, 1957, 1956, 1955, 1954, 1952, 1951, 1950, 1949, 1948, 1947, 1946, 1945, 1944, 1942, 1940, 1939, 1938, 1937, 1936, 1935, 1934, 1933, 1932, 1931, 1930, 1929, 1928, 1927, 1926, 1925, 1924, 1923, 1921, 1920 |
| 1024 GRAND CENTRAL AVE | 2013, 2006, 2004, 2003, 2001, 2000, 1999, 1996, 1995, 1992, 1991, 1990, 1986, 1985, 1981, 1980, 1976, 1975, 1972, 1971, 1970, 1969, 1967, 1966, 1965, 1964, 1963, 1962, 1961, 1960, 1958, 1957, 1956, 1955, 1954, 1952, 1951, 1950, 1949, 1948, 1947, 1946, 1945, 1944, 1942, 1940, 1939, 1938, 1937, 1936, 1935, 1934, 1933, 1932, 1931, 1930, 1929, 1928, 1927, 1926, 1925, 1924, 1923, 1921, 1920 |
| 1025 AIR WAY | 2013, 2008, 2006, 2004, 2003, 2001, 2000, 1999, 1996, 1995, 1992, 1990, 1986, 1981, 1980, 1976, 1969, 1967, 1966, 1965, 1964, 1963, 1961, 1960, 1958, 1957, 1956, 1955, 1954, 1952, 1951, 1950, 1949, 1948, 1947, 1946, 1945, 1944, 1942, 1940, 1939, 1938, 1937, 1936, 1935, 1934, 1933, 1932, 1931, 1930, 1929, 1928, 1927, 1926, 1925, 1924, 1923, 1921, 1920 |

# FINDINGS

| Address Researched | Address Not Identified in Research Source |
|---|---|
| 1025 GRAND CENTRAL AVE | 2013, 2008, 2006, 2004, 2003, 2001, 2000, 1999, 1996, 1995, 1992, 1991, 1990, 1986, 1981, 1975, 1972, 1969, 1966, 1965, 1964, 1963, 1962, 1961, 1960, 1958, 1957, 1956, 1955, 1954, 1952, 1951, 1950, 1949, 1948, 1947, 1946, 1945, 1944, 1942, 1940, 1939, 1938, 1937, 1936, 1935, 1934, 1933, 1932, 1931, 1930, 1929, 1928, 1927, 1926, 1925, 1924, 1923, 1921, 1920 |
| 1045 AIR WAY | 2013, 2008, 2006, 2004, 2003, 2001, 2000, 1999, 1996, 1992, 1990, 1986, 1981, 1976, 1971, 1969, 1966, 1965, 1963, 1961, 1960, 1958, 1957, 1956, 1955, 1954, 1952, 1951, 1949, 1948, 1947, 1946, 1945, 1944, 1942, 1940, 1939, 1938, 1937, 1936, 1935, 1934, 1933, 1932, 1931, 1930, 1929, 1928, 1927, 1926, 1925, 1924, 1923, 1921, 1920 |
| 5750 San Fernando Road | 2013, 2008, 2006, 2004, 2003, 2001, 2000, 1999, 1996, 1995, 1992, 1991, 1990, 1986, 1985, 1981, 1980, 1976, 1975, 1972, 1971, 1970, 1969, 1967, 1966, 1965, 1964, 1963, 1962, 1961, 1960, 1958, 1957, 1956, 1955, 1954, 1952, 1951, 1950, 1949, 1948, 1947, 1946, 1945, 1944, 1942, 1940, 1939, 1938, 1937, 1936, 1935, 1934, 1933, 1932, 1931, 1930, 1929, 1928, 1927, 1926, 1925, 1924, 1923, 1921, 1920 |
| 5846 SAN FERNANDO RD | 2013, 2008, 2006, 2004, 2003, 2001, 2000, 1999, 1996, 1995, 1992, 1991, 1990, 1986, 1981, 1980, 1976, 1975, 1972, 1971, 1970, 1969, 1967, 1966, 1965, 1964, 1963, 1962, 1961, 1960, 1958, 1957, 1956, 1955, 1954, 1952, 1951, 1950, 1949, 1948, 1947, 1946, 1945, 1944, 1942, 1940, 1939, 1938, 1937, 1936, 1935, 1934, 1933, 1932, 1931, 1930, 1929, 1928, 1927, 1926, 1925, 1924, 1923, 1921, 1920 |
| 5900 SAN FERNANDO RD | 2013, 2008, 2004, 2003, 2000, 1999, 1996, 1992, 1985, 1981, 1980, 1976, 1975, 1971, 1970, 1969, 1966, 1965, 1964, 1963, 1961, 1957, 1956, 1954, 1952, 1951, 1950, 1949, 1948, 1947, 1946, 1945, 1944, 1942, 1940, 1939, 1938, 1937, 1936, 1935, 1934, 1933, 1932, 1931, 1930, 1929, 1928, 1927, 1926, 1925, 1924, 1923, 1921, 1920 |
| 5900 SAN FERNANDO RD | 2006, 2004, 2003, 2001, 2000, 1999, 1996, 1995, 1992, 1991, 1990, 1986, 1985, 1981, 1980, 1976, 1975, 1972, 1971, 1970, 1969, 1967, 1966, 1965, 1964, 1963, 1962, 1961, 1960, 1958, 1957, 1956, 1955, 1954, 1952, 1951, 1950, 1949, 1948, 1947, 1946, 1945, 1944, 1942, 1940, 1939, 1938, 1937, 1936, 1935, 1934, 1933, 1932, 1931, 1930, 1929, 1928, 1927, 1926, 1925, 1924, 1923, 1921, 1920 |
| 5904 SAN FERNANDO RD | 2013, 2008, 2006, 2004, 2003, 2000, 1999, 1996, 1995, 1992, 1991, 1990, 1986, 1985, 1980, 1970, 1969, 1966, 1965, 1964, 1963, 1961, 1957, 1956, 1954, 1952, 1951, 1950, 1949, 1948, 1947, 1946, 1945, 1944, 1942, 1940, 1939, 1938, 1937, 1936, 1935, 1934, 1933, 1932, 1931, 1930, 1929, 1928, 1927, 1926, 1925, 1924, 1923, 1921, 1920 |
| 5906 SAN FERNANDO RD | 2013, 2008, 2006, 2004, 2003, 2001, 2000, 1999, 1996, 1995, 1992, 1991, 1990, 1986, 1985, 1981, 1980, 1976, 1975, 1972, 1971, 1970, 1969, 1967, 1966, 1965, 1964, 1963, 1962, 1961, 1958, 1957, 1956, 1954, 1952, 1951, 1950, 1949, 1948, 1947, 1946, 1945, 1944, 1942, 1940, 1939, 1938, 1937, 1936, 1935, 1934, 1933, 1932, 1931, 1930, 1929, 1928, 1927, 1926, 1925, 1924, 1923, 1921, 1920 |
| 5914 SAN FERNANDO RD | 2013, 2008, 2004, 2003, 2000, 1999, 1996, 1992, 1980, 1975, 1972, 1971, 1970, 1969, 1967, 1966, 1965, 1964, 1963, 1962, 1961, 1960, 1958, 1957, 1956, 1955, 1954, 1952, 1951, 1950, 1949, 1948, 1947, 1946, 1945, 1944, 1942, 1940, 1939, 1938, 1937, 1936, 1935, 1934, 1933, 1932, 1931, 1930, 1929, 1928, 1927, 1926, 1925, 1924, 1923, 1921, 1920 |
| 5914 SAN FERNANDO RD | 2006, 2004, 2003, 2001, 2000, 1999, 1996, 1995, 1992, 1991, 1990, 1986, 1985, 1981, 1980, 1976, 1975, 1972, 1971, 1970, 1969, 1967, 1966, 1965, 1964, 1963, 1962, 1961, 1960, 1958, 1957, 1956, 1955, 1954, 1952, 1951, 1950, 1949, 1948, 1947, 1946, 1945, 1944, 1942, 1940, 1939, 1938, 1937, 1936, 1935, 1934, 1933, 1932, 1931, 1930, 1929, 1928, 1927, 1926, 1925, 1924, 1923, 1921, 1920 |

# FINDINGS

| Address Researched | Address Not Identified in Research Source |
|---|---|
| 5924 SAN FERNANDO RD | 2006, 2004, 2003, 2001, 2000, 1999, 1996, 1995, 1992, 1991, 1990, 1986, 1985, 1981, 1980, 1976, 1975, 1972, 1971, 1970, 1969, 1967, 1966, 1965, 1964, 1963, 1962, 1961, 1960, 1958, 1957, 1956, 1955, 1954, 1952, 1951, 1950, 1949, 1948, 1947, 1946, 1945, 1944, 1942, 1940, 1939, 1938, 1937, 1936, 1935, 1934, 1933, 1932, 1931, 1930, 1929, 1928, 1927, 1926, 1925, 1924, 1923, 1921, 1920 |
| 5924 SAN FERNANDO RD | 2013, 2008, 2004, 2003, 2000, 1999, 1996, 1995, 1992, 1990, 1986, 1970, 1969, 1966, 1965, 1964, 1963, 1961, 1957, 1956, 1954, 1952, 1951, 1950, 1949, 1948, 1947, 1946, 1945, 1944, 1942, 1940, 1939, 1938, 1937, 1936, 1935, 1934, 1933, 1932, 1931, 1930, 1929, 1928, 1927, 1926, 1925, 1924, 1923, 1921, 1920 |
| 5924 SAN FRNDO RD | 2013, 2008, 2006, 2004, 2003, 2001, 2000, 1999, 1996, 1995, 1992, 1991, 1990, 1986, 1985, 1981, 1980, 1976, 1972, 1971, 1970, 1969, 1967, 1965, 1964, 1963, 1962, 1961, 1958, 1957, 1956, 1955, 1954, 1952, 1951, 1950, 1949, 1948, 1947, 1946, 1945, 1944, 1942, 1940, 1939, 1938, 1937, 1936, 1935, 1934, 1933, 1932, 1931, 1930, 1929, 1928, 1927, 1926, 1925, 1924, 1923, 1921, 1920 |
| 5930 SAN FERNANDO RD | 2013, 2008, 2004, 2003, 2000, 1999, 1996, 1995, 1992, 1990, 1986, 1980, 1975, 1970, 1969, 1966, 1965, 1964, 1963, 1962, 1961, 1958, 1957, 1956, 1954, 1952, 1951, 1950, 1949, 1948, 1947, 1946, 1945, 1944, 1942, 1940, 1939, 1938, 1937, 1936, 1935, 1934, 1933, 1932, 1931, 1930, 1929, 1928, 1927, 1926, 1925, 1924, 1923, 1921, 1920 |
| 5930 SAN FERNANDO RD | 2006, 2004, 2003, 2001, 2000, 1999, 1996, 1995, 1992, 1991, 1990, 1986, 1985, 1981, 1980, 1976, 1975, 1972, 1971, 1970, 1969, 1967, 1966, 1965, 1964, 1963, 1962, 1961, 1960, 1958, 1957, 1956, 1955, 1954, 1952, 1951, 1950, 1949, 1948, 1947, 1946, 1945, 1944, 1942, 1940, 1939, 1938, 1937, 1936, 1935, 1934, 1933, 1932, 1931, 1930, 1929, 1928, 1927, 1926, 1925, 1924, 1923, 1921, 1920 |
| 5930 SAN FRNDO RD | 2013, 2008, 2006, 2004, 2003, 2001, 2000, 1999, 1996, 1995, 1992, 1991, 1990, 1986, 1985, 1981, 1980, 1976, 1972, 1971, 1970, 1969, 1967, 1966, 1965, 1964, 1963, 1962, 1961, 1960, 1958, 1957, 1956, 1955, 1954, 1952, 1951, 1950, 1949, 1948, 1947, 1946, 1945, 1944, 1942, 1940, 1939, 1938, 1937, 1936, 1935, 1934, 1933, 1932, 1931, 1930, 1929, 1928, 1927, 1926, 1925, 1924, 1923, 1921, 1920 |
| 5932 SAN FERNANDO RD | 2013, 2008, 2006, 2004, 2003, 2000, 1999, 1996, 1992, 1990, 1986, 1981, 1980, 1976, 1969, 1966, 1963, 1962, 1961, 1960, 1958, 1957, 1956, 1955, 1954, 1952, 1951, 1950, 1949, 1948, 1947, 1946, 1945, 1944, 1942, 1940, 1939, 1938, 1937, 1936, 1935, 1934, 1933, 1932, 1931, 1930, 1929, 1928, 1927, 1926, 1925, 1924, 1923, 1921, 1920 |
| 5932 SAN FRNDO RD | 2013, 2008, 2006, 2004, 2003, 2001, 2000, 1999, 1996, 1995, 1992, 1991, 1990, 1986, 1985, 1981, 1980, 1976, 1972, 1971, 1970, 1969, 1967, 1965, 1964, 1963, 1962, 1961, 1960, 1958, 1957, 1956, 1955, 1954, 1952, 1951, 1950, 1949, 1948, 1947, 1946, 1945, 1944, 1942, 1940, 1939, 1938, 1937, 1936, 1935, 1934, 1933, 1932, 1931, 1930, 1929, 1928, 1927, 1926, 1925, 1924, 1923, 1921, 1920 |
| 5936 SAN FERNANDO RD | 2013, 2008, 2006, 2004, 2003, 2001, 2000, 1999, 1996, 1995, 1992, 1991, 1990, 1986, 1985, 1981, 1980, 1976, 1975, 1972, 1971, 1970, 1969, 1967, 1966, 1965, 1964, 1963, 1962, 1961, 1958, 1957, 1956, 1955, 1954, 1952, 1951, 1950, 1949, 1948, 1947, 1946, 1945, 1944, 1942, 1940, 1939, 1938, 1937, 1936, 1935, 1934, 1933, 1932, 1931, 1930, 1929, 1928, 1927, 1926, 1925, 1924, 1923, 1921, 1920 |
| 5938 SAN FERNANDO RD | 2013, 2008, 2004, 2003, 2000, 1999, 1996, 1992, 1985, 1980, 1975, 1971, 1970, 1969, 1967, 1966, 1965, 1964, 1963, 1962, 1961, 1960, 1958, 1957, 1956, 1955, 1954, 1952, 1951, 1950, 1949, 1948, 1947, 1946, 1945, 1944, 1942, 1940, 1939, 1938, 1937, 1936, 1935, 1934, 1933, 1932, 1931, 1930, 1929, 1928, 1927, 1926, 1925, 1924, 1923, 1921, 1920 |
| 5938 SAN FERNANDO RD | 2006, 2004, 2003, 2001, 2000, 1999, 1996, 1995, 1992, 1991, 1990, 1986, 1985, 1981, 1980, 1976, 1975, 1972, 1971, 1970, 1969, 1967, 1966, 1965, 1964, 1963, 1962, 1961, 1960, 1958, 1957, 1956, 1955, 1954, 1952, 1951, 1950, 1949, 1948, 1947, 1946, 1945, 1944, 1942, 1940, 1939, 1938, 1937, 1936, 1935, 1934, 1933, 1932, 1931, 1930, 1929, 1928, 1927, 1926, 1925, 1924, 1923, 1921, 1920 |

# FINDINGS

| Address Researched | Address Not Identified in Research Source |
|---|---|
| 5940 SAN FERNANDO RD | 2006, 2004, 2003, 2001, 2000, 1999, 1996, 1995, 1992, 1991, 1990, 1986, 1985, 1981, 1980, 1976, 1975, 1972, 1971, 1970, 1969, 1967, 1966, 1965, 1964, 1963, 1962, 1961, 1960, 1958, 1957, 1956, 1955, 1954, 1952, 1951, 1950, 1949, 1948, 1947, 1946, 1945, 1944, 1942, 1940, 1939, 1938, 1937, 1936, 1935, 1934, 1933, 1932, 1931, 1930, 1929, 1928, 1927, 1926, 1925, 1924, 1923, 1921, 1920 |
| 5940 SAN FERNANDO RD | 2013, 2008, 2004, 2003, 2000, 1999, 1996, 1995, 1992, 1990, 1986, 1985, 1981, 1980, 1976, 1971, 1970, 1969, 1967, 1966, 1965, 1964, 1963, 1961, 1958, 1957, 1956, 1954, 1952, 1951, 1950, 1949, 1948, 1947, 1946, 1945, 1944, 1942, 1940, 1939, 1938, 1937, 1936, 1935, 1934, 1933, 1932, 1931, 1930, 1929, 1928, 1927, 1926, 1925, 1924, 1923, 1921, 1920 |
| 5969 W SAN FERNANDO RD | 2013, 2008, 2006, 2004, 2003, 2001, 2000, 1999, 1996, 1995, 1992, 1991, 1990, 1986, 1985, 1981, 1980, 1975, 1972, 1971, 1970, 1969, 1967, 1966, 1965, 1964, 1963, 1962, 1961, 1960, 1958, 1957, 1956, 1955, 1954, 1952, 1951, 1950, 1949, 1948, 1947, 1946, 1945, 1944, 1942, 1940, 1939, 1938, 1937, 1936, 1935, 1934, 1933, 1932, 1931, 1930, 1929, 1928, 1927, 1926, 1925, 1924, 1923, 1921, 1920 |
| 6000 SAN FERNANDO RD | 2013, 2008, 2004, 2003, 2000, 1999, 1996, 1992, 1986, 1981, 1980, 1976, 1971, 1970, 1969, 1967, 1966, 1965, 1964, 1963, 1962, 1961, 1960, 1958, 1957, 1956, 1954, 1952, 1951, 1950, 1949, 1948, 1947, 1946, 1945, 1944, 1942, 1940, 1939, 1938, 1937, 1936, 1935, 1934, 1933, 1932, 1931, 1930, 1929, 1928, 1927, 1926, 1925, 1924, 1923, 1921, 1920 |
| 6000 SAN FERNANDO RD | 2006, 2004, 2003, 2001, 2000, 1999, 1996, 1995, 1992, 1991, 1990, 1986, 1985, 1981, 1980, 1976, 1975, 1972, 1971, 1970, 1969, 1967, 1966, 1965, 1964, 1963, 1962, 1961, 1960, 1958, 1957, 1956, 1955, 1954, 1952, 1951, 1950, 1949, 1948, 1947, 1946, 1945, 1944, 1942, 1940, 1939, 1938, 1937, 1936, 1935, 1934, 1933, 1932, 1931, 1930, 1929, 1928, 1927, 1926, 1925, 1924, 1923, 1921, 1920 |
| 6002 SAN FERNANDO RD | 2006, 2004, 2003, 2001, 2000, 1999, 1996, 1995, 1992, 1991, 1990, 1986, 1985, 1981, 1980, 1976, 1975, 1972, 1971, 1970, 1969, 1967, 1966, 1965, 1964, 1963, 1962, 1961, 1960, 1958, 1957, 1956, 1955, 1954, 1952, 1951, 1950, 1949, 1948, 1947, 1946, 1945, 1944, 1942, 1940, 1939, 1938, 1937, 1936, 1935, 1934, 1933, 1932, 1931, 1930, 1929, 1928, 1927, 1926, 1925, 1924, 1923, 1921, 1920 |
| 6002 SAN FERNANDO RD | 2013, 2008, 2004, 2003, 2000, 1999, 1996, 1992, 1991, 1990, 1986, 1985, 1981, 1980, 1976, 1975, 1972, 1971, 1970, 1969, 1967, 1966, 1965, 1964, 1963, 1962, 1961, 1960, 1958, 1957, 1956, 1955, 1954, 1952, 1951, 1950, 1949, 1948, 1947, 1946, 1945, 1944, 1942, 1940, 1939, 1938, 1937, 1936, 1935, 1934, 1933, 1932, 1931, 1930, 1929, 1928, 1927, 1926, 1925, 1924, 1923, 1921, 1920 |
| 6004 SAN FERNANDO RD | 2013, 2008, 2004, 2003, 2000, 1999, 1996, 1992, 1990, 1986, 1985, 1981, 1980, 1976, 1975, 1972, 1971, 1970, 1969, 1967, 1966, 1965, 1964, 1963, 1962, 1961, 1960, 1958, 1957, 1956, 1955, 1954, 1952, 1951, 1950, 1949, 1948, 1947, 1946, 1945, 1944, 1942, 1940, 1939, 1938, 1937, 1936, 1935, 1934, 1933, 1932, 1931, 1930, 1929, 1928, 1927, 1926, 1925, 1924, 1923, 1921, 1920 |
| 6004 SAN FERNANDO RD | 2006, 2004, 2003, 2001, 2000, 1999, 1996, 1995, 1992, 1991, 1990, 1986, 1985, 1981, 1980, 1976, 1975, 1972, 1971, 1970, 1969, 1967, 1966, 1965, 1964, 1963, 1962, 1961, 1960, 1958, 1957, 1956, 1955, 1954, 1952, 1951, 1950, 1949, 1948, 1947, 1946, 1945, 1944, 1942, 1940, 1939, 1938, 1937, 1936, 1935, 1934, 1933, 1932, 1931, 1930, 1929, 1928, 1927, 1926, 1925, 1924, 1923, 1921, 1920 |
| 6006 N SAN FERNANDO RD | 2013, 2008, 2006, 2004, 2003, 2001, 2000, 1999, 1996, 1995, 1992, 1991, 1990, 1986, 1985, 1981, 1976, 1975, 1972, 1971, 1970, 1969, 1967, 1966, 1965, 1964, 1963, 1962, 1961, 1960, 1958, 1957, 1956, 1955, 1954, 1952, 1951, 1950, 1949, 1948, 1947, 1946, 1945, 1944, 1942, 1940, 1939, 1938, 1937, 1936, 1935, 1934, 1933, 1932, 1931, 1930, 1929, 1928, 1927, 1926, 1925, 1924, 1923, 1921, 1920 |
| 6006 SAN FERNANDO RD | 2013, 2008, 2004, 2003, 2000, 1999, 1996, 1992, 1990, 1986, 1980, 1976, 1971, 1970, 1969, 1966, 1965, 1964, 1963, 1961, 1958, 1957, 1956, 1954, 1952, 1951, 1950, 1949, 1948, 1947, 1946, 1945, 1944, 1942, 1940, 1939, 1938, 1937, 1936, 1935, 1934, 1933, 1932, 1931, 1930, 1929, 1928, 1927, 1926, 1925, 1924, 1923, 1921, 1920 |

# FINDINGS

| Address Researched | Address Not Identified in Research Source |
|---|---|
| 6006 SAN FERNANDO RD | 2013, 2006, 2004, 2003, 2001, 2000, 1999, 1996, 1995, 1992, 1991, 1990, 1986, 1985, 1981, 1980, 1976, 1975, 1972, 1971, 1970, 1969, 1967, 1966, 1965, 1964, 1963, 1962, 1961, 1960, 1958, 1957, 1956, 1955, 1954, 1952, 1951, 1950, 1949, 1948, 1947, 1946, 1945, 1944, 1942, 1940, 1939, 1938, 1937, 1936, 1935, 1934, 1933, 1932, 1931, 1930, 1929, 1928, 1927, 1926, 1925, 1924, 1923, 1921, 1920 |
| 6008 SAN FERNANDO RD | 2006, 2004, 2003, 2001, 2000, 1999, 1996, 1995, 1992, 1991, 1990, 1986, 1985, 1981, 1980, 1976, 1975, 1972, 1971, 1970, 1969, 1967, 1966, 1965, 1964, 1963, 1962, 1961, 1960, 1958, 1957, 1956, 1955, 1954, 1952, 1951, 1950, 1949, 1948, 1947, 1946, 1945, 1944, 1942, 1940, 1939, 1938, 1937, 1936, 1935, 1934, 1933, 1932, 1931, 1930, 1929, 1928, 1927, 1926, 1925, 1924, 1923, 1921, 1920 |
| 6008 SAN FERNANDO RD | 2013, 2008, 2006, 2004, 2003, 2000, 1999, 1996, 1992, 1990, 1986, 1985, 1981, 1980, 1976, 1975, 1972, 1971, 1970, 1969, 1967, 1966, 1965, 1964, 1963, 1962, 1961, 1960, 1958, 1957, 1956, 1955, 1954, 1952, 1951, 1950, 1949, 1948, 1947, 1946, 1945, 1944, 1942, 1940, 1939, 1938, 1937, 1936, 1935, 1934, 1933, 1932, 1931, 1930, 1929, 1928, 1927, 1926, 1925, 1924, 1923, 1921, 1920 |
| 6010 SAN FERNANDO RD | 2013, 2008, 2004, 2003, 2000, 1999, 1996, 1992, 1990, 1980, 1976, 1971, 1970, 1969, 1967, 1966, 1965, 1964, 1963, 1962, 1961, 1960, 1958, 1957, 1956, 1954, 1952, 1951, 1950, 1949, 1948, 1947, 1946, 1945, 1944, 1942, 1940, 1939, 1938, 1937, 1936, 1935, 1934, 1933, 1932, 1931, 1930, 1929, 1928, 1927, 1926, 1925, 1924, 1923, 1921, 1920 |
| 6010 SAN FERNANDO RD | 2006, 2004, 2003, 2001, 2000, 1999, 1996, 1995, 1992, 1991, 1990, 1986, 1985, 1981, 1980, 1976, 1975, 1972, 1971, 1970, 1969, 1967, 1966, 1965, 1964, 1963, 1962, 1961, 1960, 1958, 1957, 1956, 1955, 1954, 1952, 1951, 1950, 1949, 1948, 1947, 1946, 1945, 1944, 1942, 1940, 1939, 1938, 1937, 1936, 1935, 1934, 1933, 1932, 1931, 1930, 1929, 1928, 1927, 1926, 1925, 1924, 1923, 1921, 1920 |
| 6020 SAN FERNANDO RD | 2013, 2008, 2006, 2004, 2003, 2001, 2000, 1999, 1996, 1995, 1992, 1991, 1990, 1986, 1985, 1981, 1980, 1976, 1975, 1971, 1970, 1969, 1967, 1966, 1965, 1964, 1963, 1962, 1961, 1960, 1958, 1957, 1956, 1954, 1952, 1951, 1950, 1949, 1948, 1947, 1946, 1945, 1944, 1942, 1940, 1939, 1938, 1937, 1936, 1935, 1934, 1933, 1932, 1931, 1930, 1929, 1928, 1927, 1926, 1925, 1924, 1923, 1921, 1920 |
| 6026 SAN FERNANDO RD | 2013, 2008, 2006, 2004, 2003, 2000, 1999, 1996, 1995, 1992, 1980, 1970, 1969, 1966, 1965, 1964, 1963, 1961, 1958, 1957, 1956, 1954, 1952, 1951, 1950, 1949, 1948, 1947, 1946, 1945, 1944, 1942, 1940, 1939, 1938, 1937, 1936, 1935, 1934, 1933, 1932, 1931, 1930, 1929, 1928, 1927, 1926, 1925, 1924, 1923, 1921, 1920 |
| 6034 SAN FERNANDO RD | 2013, 2008, 2004, 2003, 2000, 1999, 1996, 1995, 1992, 1981, 1980, 1976, 1975, 1972, 1971, 1970, 1969, 1967, 1966, 1965, 1964, 1963, 1962, 1961, 1960, 1958, 1957, 1956, 1955, 1954, 1952, 1951, 1950, 1949, 1948, 1947, 1946, 1945, 1944, 1942, 1940, 1939, 1938, 1937, 1936, 1935, 1934, 1933, 1932, 1931, 1930, 1929, 1928, 1927, 1926, 1925, 1924, 1923, 1921, 1920 |
| 6034 SAN FERNANDO RD | 2006, 2004, 2003, 2001, 2000, 1999, 1996, 1995, 1992, 1991, 1990, 1986, 1985, 1981, 1980, 1976, 1975, 1972, 1971, 1970, 1969, 1967, 1966, 1965, 1964, 1963, 1962, 1961, 1960, 1958, 1957, 1956, 1955, 1954, 1952, 1951, 1950, 1949, 1948, 1947, 1946, 1945, 1944, 1942, 1940, 1939, 1938, 1937, 1936, 1935, 1934, 1933, 1932, 1931, 1930, 1929, 1928, 1927, 1926, 1925, 1924, 1923, 1921, 1920 |
| 6036 SAN FERNANDO RD | 2006, 2004, 2003, 2001, 2000, 1999, 1996, 1995, 1992, 1991, 1990, 1986, 1985, 1981, 1980, 1976, 1975, 1972, 1971, 1970, 1969, 1967, 1966, 1965, 1964, 1963, 1962, 1961, 1960, 1958, 1957, 1956, 1955, 1954, 1952, 1951, 1950, 1949, 1948, 1947, 1946, 1945, 1944, 1942, 1940, 1939, 1938, 1937, 1936, 1935, 1934, 1933, 1932, 1931, 1930, 1929, 1928, 1927, 1926, 1925, 1924, 1923, 1921, 1920 |
| 6036 SAN FERNANDO RD | 2013, 2008, 2004, 2003, 2000, 1999, 1996, 1992, 1990, 1986, 1980, 1976, 1975, 1972, 1971, 1970, 1969, 1967, 1966, 1965, 1964, 1963, 1962, 1961, 1960, 1958, 1957, 1956, 1955, 1954, 1952, 1951, 1950, 1949, 1948, 1947, 1946, 1945, 1944, 1942, 1940, 1939, 1938, 1937, 1936, 1935, 1934, 1933, 1932, 1931, 1930, 1929, 1928, 1927, 1926, 1925, 1924, 1923, 1921, 1920 |

# FINDINGS

| Address Researched | Address Not Identified in Research Source |
|---|---|
| 6038 SAN FERNANDO RD | 2013, 2008, 2006, 2004, 2003, 2000, 1999, 1996, 1992, 1990, 1986, 1981, 1980, 1975, 1972, 1971, 1970, 1969, 1967, 1966, 1965, 1964, 1963, 1962, 1961, 1960, 1958, 1957, 1956, 1954, 1952, 1951, 1950, 1949, 1948, 1947, 1946, 1945, 1944, 1942, 1940, 1939, 1938, 1937, 1936, 1935, 1934, 1933, 1932, 1931, 1930, 1929, 1928, 1927, 1926, 1925, 1924, 1923, 1921, 1920 |
| 6038 SAN FERNANDO RD | 2013, 2006, 2004, 2003, 2001, 2000, 1999, 1996, 1995, 1992, 1991, 1990, 1986, 1985, 1981, 1980, 1976, 1975, 1972, 1971, 1970, 1969, 1967, 1966, 1965, 1964, 1963, 1962, 1961, 1960, 1958, 1957, 1956, 1955, 1954, 1952, 1951, 1950, 1949, 1948, 1947, 1946, 1945, 1944, 1942, 1940, 1939, 1938, 1937, 1936, 1935, 1934, 1933, 1932, 1931, 1930, 1929, 1928, 1927, 1926, 1925, 1924, 1923, 1921, 1920 |
| 6040 SAN FERNANDO RD | 2013, 2006, 2004, 2003, 2001, 2000, 1999, 1996, 1995, 1992, 1991, 1990, 1986, 1985, 1981, 1980, 1976, 1975, 1972, 1971, 1970, 1969, 1967, 1966, 1965, 1964, 1963, 1962, 1961, 1960, 1958, 1957, 1956, 1955, 1954, 1952, 1951, 1950, 1949, 1948, 1947, 1946, 1945, 1944, 1942, 1940, 1939, 1938, 1937, 1936, 1935, 1934, 1933, 1932, 1931, 1930, 1929, 1928, 1927, 1926, 1925, 1924, 1923, 1921, 1920 |
| 6040 SAN FERNANDO RD | 2013, 2008, 2004, 2003, 2000, 1999, 1996, 1992, 1991, 1990, 1986, 1985, 1981, 1980, 1976, 1975, 1971, 1970, 1969, 1966, 1965, 1964, 1963, 1962, 1961, 1960, 1957, 1956, 1954, 1952, 1951, 1950, 1949, 1948, 1947, 1946, 1945, 1944, 1942, 1940, 1939, 1938, 1937, 1936, 1935, 1934, 1933, 1932, 1931, 1930, 1929, 1928, 1927, 1926, 1925, 1924, 1923, 1921, 1920 |
| 6042 SAN FERNANDO RD | 2013, 2008, 2004, 2003, 2000, 1999, 1996, 1992, 1991, 1990, 1986, 1981, 1980, 1976, 1975, 1972, 1971, 1970, 1969, 1967, 1966, 1965, 1964, 1963, 1962, 1961, 1960, 1958, 1957, 1956, 1955, 1954, 1952, 1951, 1950, 1949, 1948, 1947, 1946, 1945, 1944, 1942, 1940, 1939, 1938, 1937, 1936, 1935, 1934, 1933, 1932, 1931, 1930, 1929, 1928, 1927, 1926, 1925, 1924, 1923, 1921, 1920 |
| 6042 SAN FERNANDO RD | 2006, 2004, 2003, 2001, 2000, 1999, 1996, 1995, 1992, 1991, 1990, 1986, 1985, 1981, 1980, 1976, 1975, 1972, 1971, 1970, 1969, 1967, 1966, 1965, 1964, 1963, 1962, 1961, 1960, 1958, 1957, 1956, 1955, 1954, 1952, 1951, 1950, 1949, 1948, 1947, 1946, 1945, 1944, 1942, 1940, 1939, 1938, 1937, 1936, 1935, 1934, 1933, 1932, 1931, 1930, 1929, 1928, 1927, 1926, 1925, 1924, 1923, 1921, 1920 |
| 6044 SAN FERNANDO RD | 2008, 2006, 2004, 2003, 2001, 2000, 1999, 1996, 1995, 1992, 1991, 1990, 1986, 1985, 1981, 1980, 1976, 1975, 1972, 1971, 1970, 1969, 1967, 1966, 1965, 1964, 1963, 1962, 1961, 1960, 1958, 1957, 1956, 1955, 1954, 1952, 1951, 1950, 1949, 1948, 1947, 1946, 1945, 1944, 1942, 1940, 1939, 1938, 1937, 1936, 1935, 1934, 1933, 1932, 1931, 1930, 1929, 1928, 1927, 1926, 1925, 1924, 1923, 1921, 1920 |
| 6044 SAN FERNANDO RD | 2013, 2008, 2004, 2003, 2000, 1999, 1996, 1992, 1991, 1985, 1980, 1971, 1970, 1969, 1967, 1966, 1965, 1964, 1963, 1962, 1961, 1957, 1956, 1955, 1954, 1952, 1951, 1950, 1949, 1948, 1947, 1946, 1945, 1944, 1942, 1940, 1939, 1938, 1937, 1936, 1935, 1934, 1933, 1932, 1931, 1930, 1929, 1928, 1927, 1926, 1925, 1924, 1923, 1921, 1920 |
| 6044 SAN FRNDO RD | 2013, 2008, 2006, 2004, 2003, 2001, 2000, 1999, 1996, 1995, 1992, 1991, 1990, 1986, 1985, 1981, 1980, 1976, 1975, 1972, 1971, 1970, 1969, 1967, 1966, 1965, 1964, 1963, 1962, 1961, 1958, 1956, 1955, 1954, 1952, 1951, 1950, 1949, 1948, 1947, 1946, 1945, 1944, 1942, 1940, 1939, 1938, 1937, 1936, 1935, 1934, 1933, 1932, 1931, 1930, 1929, 1928, 1927, 1926, 1925, 1924, 1923, 1921, 1920 |
| 6046 SAN FERNANDO RD | 2013, 2008, 2006, 2004, 2003, 2000, 1999, 1996, 1995, 1992, 1990, 1986, 1985, 1981, 1980, 1976, 1975, 1971, 1970, 1969, 1967, 1966, 1965, 1964, 1963, 1962, 1961, 1960, 1958, 1957, 1956, 1954, 1952, 1951, 1950, 1949, 1948, 1947, 1946, 1945, 1944, 1942, 1940, 1939, 1938, 1937, 1936, 1935, 1934, 1933, 1932, 1931, 1930, 1929, 1928, 1927, 1926, 1925, 1924, 1923, 1921, 1920 |
| 6046 SAN FERNANDO RD | 2006, 2004, 2003, 2001, 2000, 1999, 1996, 1995, 1992, 1991, 1990, 1986, 1985, 1981, 1980, 1976, 1975, 1972, 1971, 1970, 1969, 1967, 1966, 1965, 1964, 1963, 1962, 1961, 1960, 1958, 1957, 1956, 1955, 1954, 1952, 1951, 1950, 1949, 1948, 1947, 1946, 1945, 1944, 1942, 1940, 1939, 1938, 1937, 1936, 1935, 1934, 1933, 1932, 1931, 1930, 1929, 1928, 1927, 1926, 1925, 1924, 1923, 1921, 1920 |

# FINDINGS

| Address Researched | Address Not Identified in Research Source |
|---|---|
| 6048 SAN FERNANDO RD | 2006, 2004, 2003, 2001, 2000, 1999, 1996, 1995, 1992, 1991, 1990, 1986, 1985, 1981, 1980, 1976, 1975, 1972, 1971, 1970, 1969, 1967, 1966, 1965, 1964, 1963, 1962, 1961, 1960, 1958, 1957, 1956, 1955, 1954, 1952, 1951, 1950, 1949, 1948, 1947, 1946, 1945, 1944, 1942, 1940, 1939, 1938, 1937, 1936, 1935, 1934, 1933, 1932, 1931, 1930, 1929, 1928, 1927, 1926, 1925, 1924, 1923, 1921, 1920 |
| 6048 SAN FERNANDO RD | 2013, 2008, 2004, 2003, 2000, 1999, 1996, 1992, 1991, 1990, 1986, 1981, 1980, 1976, 1975, 1970, 1969, 1967, 1966, 1965, 1964, 1963, 1961, 1958, 1957, 1956, 1954, 1952, 1951, 1950, 1949, 1948, 1947, 1946, 1945, 1944, 1942, 1940, 1939, 1938, 1937, 1936, 1935, 1934, 1933, 1932, 1931, 1930, 1929, 1928, 1927, 1926, 1925, 1924, 1923, 1921, 1920 |
| 6050 SAN FERNANDO RD | 2013, 2008, 2006, 2004, 2003, 2000, 1999, 1996, 1992, 1990, 1986, 1981, 1980, 1976, 1975, 1972, 1971, 1970, 1969, 1967, 1966, 1965, 1964, 1963, 1962, 1961, 1960, 1958, 1957, 1956, 1955, 1954, 1952, 1951, 1950, 1949, 1948, 1947, 1946, 1945, 1944, 1942, 1940, 1939, 1938, 1937, 1936, 1935, 1934, 1933, 1932, 1931, 1930, 1929, 1928, 1927, 1926, 1925, 1924, 1923, 1921, 1920 |
| 6050 SAN FERNANDO RD | 2006, 2004, 2003, 2001, 2000, 1999, 1996, 1995, 1992, 1991, 1990, 1986, 1985, 1981, 1980, 1976, 1975, 1972, 1971, 1970, 1969, 1967, 1966, 1965, 1964, 1963, 1962, 1961, 1960, 1958, 1957, 1956, 1955, 1954, 1952, 1951, 1950, 1949, 1948, 1947, 1946, 1945, 1944, 1942, 1940, 1939, 1938, 1937, 1936, 1935, 1934, 1933, 1932, 1931, 1930, 1929, 1928, 1927, 1926, 1925, 1924, 1923, 1921, 1920 |
| 6052 SAN FERNANDO RD | 2006, 2004, 2003, 2001, 2000, 1999, 1996, 1995, 1992, 1991, 1990, 1986, 1985, 1981, 1980, 1976, 1975, 1972, 1971, 1970, 1969, 1967, 1966, 1965, 1964, 1963, 1962, 1961, 1960, 1958, 1957, 1956, 1955, 1954, 1952, 1951, 1950, 1949, 1948, 1947, 1946, 1945, 1944, 1942, 1940, 1939, 1938, 1937, 1936, 1935, 1934, 1933, 1932, 1931, 1930, 1929, 1928, 1927, 1926, 1925, 1924, 1923, 1921, 1920 |
| 6052 SAN FERNANDO RD | 2013, 2008, 2006, 2004, 2003, 2000, 1999, 1996, 1995, 1992, 1991, 1990, 1986, 1981, 1980, 1976, 1975, 1972, 1971, 1970, 1969, 1967, 1966, 1965, 1964, 1963, 1962, 1961, 1960, 1958, 1957, 1956, 1955, 1954, 1952, 1951, 1950, 1949, 1948, 1947, 1946, 1945, 1944, 1942, 1940, 1939, 1938, 1937, 1936, 1935, 1934, 1933, 1932, 1931, 1930, 1929, 1928, 1927, 1926, 1925, 1924, 1923, 1921, 1920 |
| 6054 SAN FERNANDO RD | 2013, 2008, 2004, 2003, 2000, 1999, 1996, 1992, 1990, 1985, 1980, 1975, 1972, 1971, 1970, 1969, 1967, 1966, 1965, 1964, 1963, 1962, 1961, 1960, 1958, 1957, 1956, 1955, 1954, 1952, 1951, 1950, 1949, 1948, 1947, 1946, 1945, 1944, 1942, 1940, 1939, 1938, 1937, 1936, 1935, 1934, 1933, 1932, 1931, 1930, 1929, 1928, 1927, 1926, 1925, 1924, 1923, 1921, 1920 |
| 6054 SAN FERNANDO RD | 2013, 2006, 2004, 2003, 2001, 2000, 1999, 1996, 1995, 1992, 1991, 1990, 1986, 1985, 1981, 1980, 1976, 1975, 1972, 1971, 1970, 1969, 1967, 1966, 1965, 1964, 1963, 1962, 1961, 1960, 1958, 1957, 1956, 1955, 1954, 1952, 1951, 1950, 1949, 1948, 1947, 1946, 1945, 1944, 1942, 1940, 1939, 1938, 1937, 1936, 1935, 1934, 1933, 1932, 1931, 1930, 1929, 1928, 1927, 1926, 1925, 1924, 1923, 1921, 1920 |
| 6056 SAN FERNANDO RD | 2006, 2004, 2003, 2001, 2000, 1999, 1996, 1995, 1992, 1991, 1990, 1986, 1985, 1981, 1980, 1976, 1975, 1972, 1971, 1970, 1969, 1967, 1966, 1965, 1964, 1963, 1962, 1961, 1960, 1958, 1957, 1956, 1955, 1954, 1952, 1951, 1950, 1949, 1948, 1947, 1946, 1945, 1944, 1942, 1940, 1939, 1938, 1937, 1936, 1935, 1934, 1933, 1932, 1931, 1930, 1929, 1928, 1927, 1926, 1925, 1924, 1923, 1921, 1920 |
| 6056 SAN FERNANDO RD | 2013, 2008, 2004, 2003, 2000, 1999, 1996, 1992, 1990, 1986, 1985, 1981, 1980, 1976, 1975, 1972, 1971, 1970, 1969, 1967, 1966, 1965, 1964, 1963, 1962, 1961, 1960, 1958, 1957, 1956, 1955, 1954, 1952, 1951, 1950, 1949, 1948, 1947, 1946, 1945, 1944, 1942, 1940, 1939, 1938, 1937, 1936, 1935, 1934, 1933, 1932, 1931, 1930, 1929, 1928, 1927, 1926, 1925, 1924, 1923, 1921, 1920 |
| 6058 SAN FERNANDO RD | 2013, 2008, 2004, 2003, 2000, 1999, 1996, 1992, 1990, 1986, 1985, 1981, 1980, 1976, 1971, 1970, 1969, 1967, 1966, 1965, 1964, 1963, 1962, 1961, 1958, 1957, 1956, 1954, 1952, 1951, 1950, 1949, 1948, 1947, 1946, 1945, 1944, 1942, 1940, 1939, 1938, 1937, 1936, 1935, 1934, 1933, 1932, 1931, 1930, 1929, 1928, 1927, 1926, 1925, 1924, 1923, 1921, 1920 |

# FINDINGS

| Address Researched | Address Not Identified in Research Source |
|---|---|
| 6058 SAN FERNANDO RD | 2006, 2004, 2003, 2001, 2000, 1999, 1996, 1995, 1992, 1991, 1990, 1986, 1985, 1981, 1980, 1976, 1975, 1972, 1971, 1970, 1969, 1967, 1966, 1965, 1964, 1963, 1962, 1961, 1960, 1958, 1957, 1956, 1955, 1954, 1952, 1951, 1950, 1949, 1948, 1947, 1946, 1945, 1944, 1942, 1940, 1939, 1938, 1937, 1936, 1935, 1934, 1933, 1932, 1931, 1930, 1929, 1928, 1927, 1926, 1925, 1924, 1923, 1921, 1920 |
| 6060 SAN FERNANDO RD | 2013, 2006, 2004, 2003, 2001, 2000, 1999, 1996, 1995, 1992, 1991, 1990, 1986, 1985, 1981, 1980, 1976, 1975, 1972, 1971, 1970, 1969, 1967, 1966, 1965, 1964, 1963, 1962, 1961, 1960, 1958, 1957, 1956, 1955, 1954, 1952, 1951, 1950, 1949, 1948, 1947, 1946, 1945, 1944, 1942, 1940, 1939, 1938, 1937, 1936, 1935, 1934, 1933, 1932, 1931, 1930, 1929, 1928, 1927, 1926, 1925, 1924, 1923, 1921, 1920 |
| 6060 SAN FERNANDO RD | 2013, 2008, 2004, 2003, 2000, 1999, 1996, 1995, 1992, 1990, 1986, 1985, 1981, 1980, 1976, 1975, 1972, 1971, 1970, 1969, 1967, 1966, 1965, 1964, 1963, 1962, 1961, 1960, 1958, 1957, 1956, 1955, 1954, 1952, 1951, 1950, 1949, 1948, 1947, 1946, 1945, 1944, 1942, 1940, 1939, 1938, 1937, 1936, 1935, 1934, 1933, 1932, 1931, 1930, 1929, 1928, 1927, 1926, 1925, 1924, 1923, 1921, 1920 |
| 6062 SAN FERNANDO RD | 2013, 2008, 2004, 2003, 2000, 1999, 1996, 1995, 1992, 1990, 1986, 1981, 1980, 1976, 1975, 1972, 1971, 1970, 1969, 1967, 1966, 1965, 1964, 1963, 1962, 1961, 1960, 1958, 1957, 1956, 1955, 1954, 1952, 1951, 1950, 1949, 1948, 1947, 1946, 1945, 1944, 1942, 1940, 1939, 1938, 1937, 1936, 1935, 1934, 1933, 1932, 1931, 1930, 1929, 1928, 1927, 1926, 1925, 1924, 1923, 1921, 1920 |
| 6062 SAN FERNANDO RD | 2006, 2004, 2003, 2001, 2000, 1999, 1996, 1995, 1992, 1991, 1990, 1986, 1985, 1981, 1980, 1976, 1975, 1972, 1971, 1970, 1969, 1967, 1966, 1965, 1964, 1963, 1962, 1961, 1960, 1958, 1957, 1956, 1955, 1954, 1952, 1951, 1950, 1949, 1948, 1947, 1946, 1945, 1944, 1942, 1940, 1939, 1938, 1937, 1936, 1935, 1934, 1933, 1932, 1931, 1930, 1929, 1928, 1927, 1926, 1925, 1924, 1923, 1921, 1920 |
| 700 FLOWER | 2013, 2008, 2006, 2004, 2003, 2001, 2000, 1999, 1996, 1995, 1992, 1991, 1990, 1985, 1980, 1976, 1975, 1972, 1971, 1970, 1969, 1967, 1966, 1965, 1964, 1963, 1962, 1961, 1960, 1958, 1957, 1956, 1955, 1954, 1952, 1951, 1950, 1949, 1948, 1947, 1946, 1945, 1944, 1942, 1940, 1939, 1938, 1937, 1936, 1935, 1934, 1933, 1932, 1931, 1930, 1929, 1928, 1927, 1926, 1925, 1924, 1923, 1921, 1920 |
| 700 FLOWER BLDG | 2013, 2008, 2006, 2004, 2003, 2001, 2000, 1999, 1996, 1995, 1992, 1991, 1990, 1985, 1980, 1976, 1975, 1972, 1971, 1970, 1969, 1967, 1966, 1965, 1964, 1963, 1962, 1961, 1960, 1958, 1957, 1956, 1955, 1954, 1952, 1951, 1950, 1949, 1948, 1947, 1946, 1945, 1944, 1942, 1940, 1939, 1938, 1937, 1936, 1935, 1934, 1933, 1932, 1931, 1930, 1929, 1928, 1927, 1926, 1925, 1924, 1923, 1921, 1920 |
| 700 FLOWER ST S | 2013, 2008, 2006, 2004, 2003, 2001, 2000, 1999, 1996, 1995, 1992, 1991, 1990, 1986, 1985, 1981, 1980, 1976, 1975, 1972, 1971, 1969, 1967, 1966, 1965, 1964, 1963, 1962, 1961, 1960, 1958, 1957, 1956, 1955, 1954, 1952, 1951, 1950, 1949, 1948, 1947, 1946, 1945, 1944, 1942, 1940, 1939, 1938, 1937, 1936, 1935, 1934, 1933, 1932, 1931, 1930, 1929, 1928, 1927, 1926, 1925, 1924, 1923, 1921, 1920 |
| 702 FLOWER | 2013, 2008, 2006, 2004, 2003, 2001, 2000, 1999, 1996, 1995, 1992, 1991, 1990, 1986, 1985, 1981, 1980, 1976, 1975, 1972, 1971, 1970, 1969, 1967, 1966, 1965, 1964, 1963, 1962, 1961, 1960, 1958, 1957, 1956, 1955, 1954, 1952, 1951, 1950, 1949, 1948, 1947, 1946, 1945, 1944, 1942, 1939, 1938, 1937, 1936, 1935, 1934, 1933, 1932, 1931, 1930, 1929, 1928, 1927, 1926, 1925, 1924, 1923, 1921, 1920 |
| 702 FLOWER ST N | 2013, 2008, 2006, 2004, 2003, 2001, 2000, 1999, 1996, 1995, 1992, 1991, 1990, 1986, 1985, 1981, 1980, 1976, 1975, 1972, 1971, 1970, 1969, 1967, 1966, 1965, 1964, 1963, 1962, 1961, 1958, 1957, 1956, 1955, 1954, 1952, 1951, 1950, 1949, 1948, 1947, 1946, 1945, 1944, 1942, 1940, 1939, 1938, 1937, 1936, 1935, 1934, 1933, 1932, 1931, 1930, 1929, 1928, 1927, 1926, 1925, 1924, 1923, 1921, 1920 |
| 702 S FLOWER ST | 2013, 2008, 2006, 2004, 2003, 2001, 2000, 1999, 1996, 1995, 1992, 1991, 1990, 1986, 1985, 1981, 1980, 1976, 1975, 1972, 1971, 1969, 1967, 1966, 1965, 1964, 1963, 1962, 1961, 1960, 1958, 1957, 1956, 1955, 1954, 1952, 1951, 1950, 1949, 1948, 1947, 1946, 1945, 1944, 1942, 1940, 1939, 1938, 1937, 1936, 1935, 1934, 1933, 1932, 1931, 1930, 1929, 1928, 1927, 1926, 1925, 1924, 1923, 1921, 1920 |

# FINDINGS

| Address Researched | Address Not Identified in Research Source |
|---|---|
| 704 ALMA | 2013, 2008, 2006, 2004, 2003, 2001, 2000, 1999, 1996, 1992, 1991, 1990, 1986, 1985, 1981, 1980, 1976, 1975, 1972, 1971, 1970, 1969, 1967, 1966, 1965, 1964, 1963, 1962, 1961, 1960, 1958, 1957, 1956, 1955, 1954, 1952, 1951, 1950, 1949, 1948, 1947, 1946, 1945, 1944, 1942, 1940, 1939, 1938, 1937, 1936, 1935, 1934, 1933, 1932, 1931, 1930, 1929, 1928, 1927, 1926, 1925, 1924, 1923, 1921, 1920 |
| 705 ALMA | 2013, 2008, 2006, 2004, 2003, 2001, 2000, 1999, 1996, 1995, 1992, 1991, 1990, 1986, 1985, 1981, 1980, 1976, 1975, 1972, 1971, 1970, 1969, 1967, 1966, 1965, 1964, 1963, 1962, 1961, 1960, 1958, 1957, 1956, 1955, 1954, 1952, 1951, 1950, 1949, 1948, 1947, 1946, 1945, 1944, 1942, 1940, 1939, 1938, 1937, 1936, 1935, 1934, 1933, 1932, 1931, 1930, 1929, 1928, 1927, 1926, 1925, 1923, 1921, 1920 |
| 705 FLOWER | 2013, 2008, 2006, 2004, 2003, 2001, 2000, 1999, 1996, 1995, 1992, 1991, 1990, 1986, 1985, 1981, 1980, 1976, 1975, 1972, 1971, 1970, 1969, 1967, 1966, 1965, 1964, 1963, 1962, 1961, 1960, 1958, 1957, 1956, 1955, 1954, 1952, 1951, 1950, 1949, 1948, 1947, 1946, 1945, 1944, 1942, 1939, 1938, 1937, 1936, 1935, 1934, 1933, 1932, 1931, 1930, 1929, 1928, 1927, 1926, 1925, 1924, 1923, 1921, 1920 |
| 705 FLOWER ST N | 2013, 2008, 2006, 2004, 2003, 2001, 2000, 1999, 1996, 1995, 1992, 1991, 1990, 1986, 1985, 1981, 1980, 1976, 1975, 1972, 1971, 1970, 1969, 1967, 1966, 1965, 1964, 1963, 1962, 1961, 1958, 1957, 1956, 1955, 1954, 1952, 1951, 1950, 1949, 1948, 1947, 1946, 1945, 1944, 1942, 1940, 1939, 1938, 1937, 1936, 1935, 1934, 1933, 1932, 1931, 1930, 1929, 1928, 1927, 1926, 1925, 1924, 1923, 1921, 1920 |
| 706 FLOWER | 2013, 2008, 2006, 2004, 2003, 2001, 2000, 1999, 1996, 1995, 1992, 1991, 1990, 1986, 1985, 1981, 1980, 1976, 1975, 1972, 1971, 1970, 1969, 1967, 1966, 1965, 1964, 1963, 1962, 1961, 1960, 1958, 1957, 1956, 1955, 1954, 1952, 1951, 1950, 1949, 1948, 1947, 1946, 1945, 1944, 1942, 1939, 1938, 1937, 1936, 1935, 1934, 1933, 1932, 1931, 1930, 1929, 1928, 1927, 1926, 1925, 1924, 1923, 1921, 1920 |
| 706 FLOWER ST N | 2013, 2008, 2006, 2004, 2003, 2001, 2000, 1999, 1996, 1995, 1992, 1991, 1990, 1986, 1985, 1981, 1980, 1976, 1975, 1972, 1971, 1970, 1969, 1967, 1966, 1965, 1964, 1963, 1962, 1961, 1958, 1957, 1956, 1955, 1954, 1952, 1951, 1950, 1949, 1948, 1947, 1946, 1945, 1944, 1942, 1940, 1939, 1938, 1937, 1936, 1935, 1934, 1933, 1932, 1931, 1930, 1929, 1928, 1927, 1926, 1925, 1924, 1923, 1921, 1920 |
| 708 FLOWER | 2013, 2008, 2006, 2004, 2003, 2001, 2000, 1999, 1996, 1995, 1992, 1991, 1990, 1986, 1985, 1981, 1980, 1976, 1975, 1972, 1971, 1970, 1969, 1967, 1966, 1965, 1964, 1963, 1962, 1961, 1960, 1958, 1957, 1956, 1955, 1954, 1952, 1951, 1950, 1949, 1948, 1947, 1946, 1945, 1944, 1942, 1939, 1938, 1937, 1936, 1935, 1934, 1933, 1932, 1931, 1930, 1929, 1928, 1927, 1926, 1925, 1924, 1923, 1921, 1920 |
| 708 FLOWER ST N | 2013, 2008, 2006, 2004, 2003, 2001, 2000, 1999, 1996, 1995, 1992, 1991, 1990, 1986, 1985, 1981, 1980, 1976, 1975, 1972, 1971, 1970, 1969, 1967, 1966, 1965, 1964, 1963, 1962, 1961, 1958, 1957, 1956, 1955, 1954, 1952, 1951, 1950, 1949, 1948, 1947, 1946, 1945, 1944, 1942, 1940, 1939, 1938, 1937, 1936, 1935, 1934, 1933, 1932, 1931, 1930, 1929, 1928, 1927, 1926, 1925, 1924, 1923, 1921, 1920 |
| 709 FLOWER | 2013, 2008, 2006, 2004, 2003, 2001, 2000, 1999, 1996, 1995, 1992, 1991, 1990, 1986, 1985, 1981, 1980, 1976, 1975, 1972, 1971, 1970, 1969, 1967, 1966, 1965, 1964, 1963, 1962, 1961, 1960, 1958, 1957, 1956, 1955, 1954, 1952, 1951, 1950, 1949, 1948, 1947, 1946, 1945, 1944, 1942, 1939, 1938, 1937, 1936, 1934, 1933, 1932, 1931, 1930, 1929, 1928, 1927, 1926, 1925, 1924, 1923, 1921, 1920 |
| 710 ALMA | 2013, 2008, 2006, 2004, 2003, 2001, 2000, 1999, 1996, 1995, 1992, 1991, 1986, 1985, 1981, 1980, 1976, 1975, 1972, 1971, 1970, 1969, 1967, 1966, 1965, 1964, 1963, 1962, 1961, 1960, 1958, 1957, 1956, 1955, 1954, 1952, 1951, 1950, 1949, 1948, 1947, 1946, 1945, 1944, 1942, 1940, 1939, 1938, 1937, 1936, 1934, 1933, 1932, 1931, 1930, 1929, 1928, 1927, 1926, 1925, 1923, 1921, 1920 |
| 711 ALMA | 2013, 2008, 2006, 2004, 2003, 2001, 2000, 1999, 1996, 1992, 1990, 1986, 1981, 1980, 1976, 1975, 1972, 1971, 1970, 1969, 1967, 1966, 1965, 1964, 1963, 1962, 1961, 1958, 1957, 1956, 1955, 1954, 1952, 1951, 1950, 1949, 1948, 1947, 1946, 1945, 1944, 1942, 1940, 1939, 1938, 1937, 1936, 1935, 1934, 1933, 1932, 1931, 1930, 1928, 1927, 1926, 1925, 1923, 1921, 1920 |

# FINDINGS

| Address Researched | Address Not Identified in Research Source |
|---|---|
| 711 ALMA ST | 2013, 2008, 2004, 2003, 2000, 1999, 1996, 1995, 1992, 1991, 1990, 1986, 1985, 1981, 1976, 1975, 1972, 1971, 1969, 1967, 1966, 1965, 1964, 1963, 1961, 1960, 1958, 1957, 1955, 1954, 1952, 1951, 1949, 1948, 1947, 1946, 1945, 1944, 1942, 1940, 1939, 1938, 1937, 1936, 1935, 1934, 1933, 1932, 1931, 1930, 1929, 1928, 1927, 1926, 1925, 1924, 1923, 1921, 1920 |
| 711 FLOWER | 2013, 2008, 2006, 2004, 2003, 2001, 2000, 1999, 1996, 1995, 1992, 1991, 1990, 1985, 1981, 1980, 1976, 1975, 1972, 1971, 1970, 1969, 1966, 1965, 1964, 1963, 1962, 1961, 1960, 1958, 1957, 1956, 1955, 1954, 1952, 1951, 1950, 1949, 1948, 1947, 1946, 1945, 1944, 1942, 1940, 1939, 1938, 1937, 1936, 1935, 1934, 1933, 1932, 1931, 1930, 1929, 1928, 1927, 1926, 1925, 1924, 1923, 1921, 1920 |
| 711 FLOWER ST | 2013, 2008, 2006, 2004, 2003, 2000, 1999, 1996, 1995, 1992, 1991, 1990, 1986, 1985, 1981, 1980, 1976, 1975, 1971, 1970, 1969, 1967, 1966, 1965, 1964, 1963, 1962, 1961, 1960, 1958, 1957, 1956, 1955, 1954, 1952, 1951, 1950, 1949, 1948, 1947, 1946, 1945, 1944, 1942, 1940, 1939, 1938, 1937, 1936, 1935, 1934, 1933, 1932, 1931, 1930, 1929, 1928, 1927, 1926, 1925, 1924, 1923, 1921, 1920 |
| 711 FLOWER ST S | 2013, 2008, 2006, 2004, 2003, 2001, 2000, 1999, 1996, 1995, 1992, 1991, 1990, 1986, 1985, 1981, 1980, 1976, 1975, 1972, 1971, 1969, 1967, 1966, 1965, 1964, 1963, 1962, 1961, 1960, 1958, 1957, 1956, 1955, 1954, 1952, 1951, 1950, 1949, 1948, 1947, 1946, 1945, 1944, 1942, 1940, 1939, 1938, 1937, 1936, 1935, 1934, 1933, 1932, 1931, 1930, 1929, 1928, 1927, 1926, 1925, 1924, 1923, 1921, 1920 |
| 712 FLOWER | 2013, 2008, 2006, 2004, 2003, 2001, 2000, 1999, 1996, 1995, 1992, 1991, 1990, 1986, 1985, 1981, 1980, 1976, 1975, 1972, 1971, 1970, 1969, 1967, 1966, 1965, 1964, 1963, 1962, 1961, 1960, 1958, 1957, 1956, 1955, 1954, 1952, 1951, 1950, 1949, 1948, 1947, 1946, 1945, 1944, 1942, 1939, 1938, 1937, 1936, 1935, 1934, 1933, 1932, 1931, 1930, 1929, 1928, 1927, 1926, 1925, 1924, 1923, 1921, 1920 |
| 712 FLOWER ST N | 2013, 2008, 2006, 2004, 2003, 2001, 2000, 1999, 1996, 1995, 1992, 1991, 1990, 1986, 1985, 1981, 1980, 1976, 1975, 1972, 1971, 1970, 1969, 1967, 1966, 1965, 1964, 1963, 1962, 1961, 1958, 1957, 1956, 1955, 1954, 1952, 1951, 1950, 1949, 1948, 1947, 1946, 1945, 1944, 1942, 1940, 1939, 1938, 1937, 1936, 1935, 1934, 1933, 1932, 1931, 1930, 1929, 1928, 1927, 1926, 1925, 1924, 1923, 1921, 1920 |
| 713 ALMA | 2013, 2008, 2006, 2004, 2003, 2001, 2000, 1999, 1996, 1995, 1992, 1991, 1990, 1986, 1985, 1981, 1980, 1976, 1975, 1972, 1971, 1970, 1969, 1967, 1966, 1965, 1964, 1963, 1962, 1961, 1960, 1958, 1957, 1956, 1955, 1954, 1952, 1951, 1950, 1949, 1948, 1947, 1946, 1945, 1944, 1942, 1940, 1939, 1938, 1937, 1936, 1935, 1934, 1933, 1932, 1931, 1930, 1929, 1928, 1927, 1926, 1925, 1923, 1921, 1920 |
| 713 FLOWER | 2013, 2008, 2006, 2004, 2003, 2001, 2000, 1999, 1996, 1995, 1992, 1991, 1990, 1986, 1985, 1981, 1980, 1976, 1975, 1972, 1971, 1970, 1969, 1967, 1966, 1965, 1964, 1963, 1962, 1961, 1960, 1958, 1957, 1956, 1955, 1954, 1952, 1951, 1950, 1949, 1948, 1947, 1946, 1945, 1944, 1942, 1939, 1938, 1937, 1936, 1934, 1933, 1932, 1931, 1930, 1929, 1928, 1927, 1926, 1925, 1924, 1923, 1921, 1920 |
| 713 FLOWER ST N | 2013, 2008, 2006, 2004, 2003, 2001, 2000, 1999, 1996, 1995, 1992, 1991, 1990, 1986, 1985, 1981, 1980, 1976, 1975, 1972, 1971, 1970, 1969, 1967, 1966, 1965, 1964, 1963, 1962, 1961, 1958, 1957, 1956, 1955, 1954, 1952, 1951, 1950, 1949, 1948, 1947, 1946, 1945, 1944, 1942, 1940, 1939, 1938, 1937, 1936, 1935, 1934, 1933, 1932, 1931, 1930, 1929, 1928, 1927, 1926, 1925, 1924, 1923, 1921, 1920 |
| 714 FLOWER | 2013, 2008, 2006, 2004, 2003, 2001, 2000, 1999, 1996, 1995, 1992, 1991, 1990, 1986, 1985, 1981, 1980, 1976, 1975, 1972, 1971, 1970, 1969, 1967, 1966, 1965, 1964, 1963, 1962, 1961, 1960, 1958, 1957, 1956, 1955, 1954, 1952, 1951, 1950, 1949, 1948, 1947, 1946, 1945, 1944, 1942, 1939, 1938, 1937, 1936, 1935, 1934, 1933, 1932, 1931, 1930, 1929, 1928, 1927, 1926, 1925, 1924, 1923, 1921, 1920 |
| 714 FLOWER ST N | 2013, 2008, 2006, 2004, 2003, 2001, 2000, 1999, 1996, 1995, 1992, 1991, 1990, 1986, 1985, 1981, 1980, 1976, 1975, 1972, 1971, 1970, 1969, 1967, 1966, 1965, 1964, 1963, 1962, 1961, 1958, 1957, 1956, 1955, 1954, 1952, 1951, 1950, 1949, 1948, 1947, 1946, 1945, 1944, 1942, 1940, 1939, 1938, 1937, 1936, 1935, 1934, 1933, 1932, 1931, 1930, 1929, 1928, 1927, 1926, 1925, 1924, 1923, 1921, 1920 |

# FINDINGS

| Address Researched | Address Not Identified in Research Source |
|---|---|
| 715 ALMA | 2013, 2008, 2006, 2004, 2003, 2001, 2000, 1999, 1996, 1992, 1990, 1986, 1985, 1981, 1980, 1976, 1972, 1971, 1970, 1969, 1967, 1966, 1965, 1964, 1963, 1962, 1961, 1960, 1958, 1957, 1956, 1955, 1954, 1952, 1951, 1950, 1949, 1948, 1947, 1946, 1945, 1944, 1942, 1940, 1939, 1938, 1937, 1936, 1935, 1934, 1933, 1932, 1931, 1930, 1929, 1928, 1927, 1926, 1925, 1924, 1923, 1921, 1920 |
| 715 ALMA ST | 2013, 2008, 2004, 2003, 2000, 1999, 1996, 1995, 1992, 1991, 1990, 1986, 1985, 1981, 1980, 1976, 1975, 1972, 1971, 1969, 1967, 1966, 1965, 1964, 1963, 1961, 1960, 1958, 1957, 1955, 1954, 1952, 1951, 1949, 1948, 1947, 1946, 1945, 1944, 1942, 1940, 1939, 1938, 1937, 1936, 1935, 1934, 1933, 1932, 1931, 1930, 1929, 1928, 1927, 1926, 1925, 1924, 1923, 1921, 1920 |
| 715 FLOWER | 2013, 2008, 2006, 2004, 2003, 2001, 2000, 1999, 1996, 1995, 1992, 1991, 1990, 1986, 1985, 1981, 1980, 1976, 1975, 1972, 1971, 1970, 1969, 1967, 1966, 1965, 1964, 1963, 1962, 1961, 1960, 1958, 1957, 1956, 1955, 1954, 1952, 1951, 1950, 1949, 1948, 1947, 1946, 1945, 1944, 1942, 1940, 1939, 1938, 1936, 1935, 1934, 1933, 1932, 1931, 1930, 1929, 1928, 1927, 1926, 1925, 1924, 1923, 1921, 1920 |
| 717 FLOWER | 2013, 2008, 2006, 2004, 2003, 2001, 2000, 1999, 1996, 1995, 1992, 1991, 1990, 1986, 1985, 1981, 1980, 1976, 1975, 1972, 1971, 1970, 1969, 1967, 1966, 1965, 1964, 1963, 1962, 1961, 1960, 1958, 1957, 1956, 1955, 1954, 1952, 1951, 1950, 1949, 1948, 1947, 1946, 1945, 1944, 1942, 1939, 1938, 1937, 1936, 1934, 1933, 1932, 1931, 1930, 1929, 1928, 1927, 1926, 1925, 1924, 1923, 1921, 1920 |
| 717 FLOWER ST N | 2013, 2008, 2006, 2004, 2003, 2001, 2000, 1999, 1996, 1995, 1992, 1991, 1990, 1986, 1985, 1981, 1980, 1976, 1975, 1972, 1971, 1970, 1969, 1967, 1966, 1965, 1964, 1963, 1962, 1961, 1958, 1957, 1956, 1955, 1954, 1952, 1951, 1950, 1949, 1948, 1947, 1946, 1945, 1944, 1942, 1940, 1939, 1938, 1937, 1936, 1935, 1934, 1933, 1932, 1931, 1930, 1929, 1928, 1927, 1926, 1925, 1924, 1923, 1921, 1920 |
| 718 ALMA ST | 2013, 2008, 2006, 2004, 2003, 2001, 2000, 1999, 1996, 1995, 1992, 1991, 1990, 1986, 1985, 1981, 1980, 1976, 1975, 1972, 1971, 1970, 1969, 1967, 1966, 1965, 1963, 1962, 1961, 1960, 1958, 1957, 1956, 1955, 1954, 1952, 1951, 1950, 1949, 1948, 1947, 1946, 1945, 1944, 1942, 1940, 1939, 1938, 1937, 1936, 1935, 1934, 1933, 1932, 1931, 1930, 1929, 1928, 1927, 1926, 1925, 1924, 1923, 1921, 1920 |
| 718 FLOWER | 2013, 2008, 2006, 2004, 2003, 2001, 2000, 1999, 1996, 1995, 1992, 1991, 1990, 1986, 1985, 1981, 1980, 1976, 1975, 1972, 1971, 1970, 1969, 1967, 1966, 1965, 1964, 1963, 1962, 1961, 1960, 1958, 1957, 1956, 1955, 1954, 1952, 1951, 1950, 1949, 1948, 1947, 1946, 1945, 1944, 1942, 1939, 1938, 1937, 1936, 1935, 1934, 1933, 1932, 1931, 1930, 1929, 1928, 1927, 1926, 1925, 1924, 1923, 1921, 1920 |
| 718 FLOWER ST N | 2013, 2008, 2006, 2004, 2003, 2001, 2000, 1999, 1996, 1995, 1992, 1991, 1990, 1986, 1985, 1981, 1980, 1976, 1975, 1972, 1971, 1970, 1969, 1967, 1966, 1965, 1964, 1963, 1962, 1961, 1958, 1957, 1956, 1955, 1954, 1952, 1951, 1950, 1949, 1948, 1947, 1946, 1945, 1944, 1942, 1940, 1939, 1938, 1937, 1936, 1935, 1934, 1933, 1932, 1931, 1930, 1929, 1928, 1927, 1926, 1925, 1924, 1923, 1921, 1920 |
| 719 ALMA | 2013, 2008, 2006, 2004, 2003, 2001, 2000, 1999, 1996, 1992, 1990, 1986, 1985, 1981, 1980, 1976, 1972, 1970, 1969, 1966, 1965, 1964, 1963, 1962, 1961, 1960, 1957, 1956, 1955, 1954, 1952, 1951, 1950, 1949, 1948, 1947, 1946, 1945, 1944, 1942, 1940, 1939, 1938, 1937, 1936, 1935, 1934, 1933, 1932, 1931, 1930, 1929, 1928, 1927, 1926, 1925, 1923, 1921, 1920 |
| 719 ALMA LN | 2013, 2008, 2006, 2004, 2003, 2001, 2000, 1999, 1996, 1995, 1992, 1991, 1990, 1986, 1985, 1981, 1980, 1976, 1975, 1972, 1971, 1970, 1969, 1967, 1966, 1965, 1964, 1963, 1961, 1960, 1958, 1957, 1956, 1955, 1954, 1952, 1951, 1950, 1949, 1948, 1947, 1946, 1945, 1944, 1942, 1940, 1939, 1938, 1937, 1936, 1935, 1934, 1933, 1932, 1931, 1930, 1929, 1928, 1927, 1926, 1925, 1924, 1923, 1921, 1920 |
| 719 FLOWER | 2013, 2008, 2006, 2004, 2003, 2001, 2000, 1999, 1996, 1995, 1992, 1991, 1990, 1986, 1985, 1981, 1980, 1976, 1975, 1972, 1971, 1970, 1969, 1967, 1966, 1965, 1964, 1963, 1962, 1961, 1960, 1958, 1957, 1956, 1955, 1954, 1952, 1951, 1950, 1949, 1948, 1947, 1946, 1945, 1944, 1942, 1939, 1938, 1936, 1934, 1933, 1932, 1931, 1930, 1929, 1928, 1927, 1926, 1925, 1924, 1923, 1921, 1920 |

# FINDINGS

| Address Researched | Address Not Identified in Research Source |
|---|---|
| 719 FLOWER ST N | 2013, 2008, 2006, 2004, 2003, 2001, 2000, 1999, 1996, 1995, 1992, 1991, 1990, 1986, 1985, 1981, 1980, 1976, 1975, 1972, 1971, 1970, 1969, 1967, 1966, 1965, 1964, 1963, 1962, 1961, 1958, 1957, 1956, 1955, 1954, 1952, 1951, 1950, 1949, 1948, 1947, 1946, 1945, 1944, 1942, 1940, 1939, 1938, 1937, 1936, 1935, 1934, 1933, 1932, 1931, 1930, 1929, 1928, 1927, 1926, 1925, 1924, 1923, 1921, 1920 |
| 721 FLOWER | 2013, 2008, 2006, 2004, 2003, 2001, 2000, 1999, 1996, 1995, 1992, 1991, 1990, 1986, 1985, 1981, 1980, 1976, 1975, 1972, 1971, 1970, 1969, 1967, 1966, 1965, 1964, 1963, 1962, 1961, 1960, 1958, 1957, 1956, 1955, 1954, 1952, 1951, 1950, 1949, 1948, 1947, 1946, 1945, 1944, 1942, 1939, 1938, 1937, 1936, 1934, 1933, 1932, 1931, 1930, 1929, 1928, 1927, 1926, 1925, 1924, 1923, 1921, 1920 |
| 721 FLOWER ST N | 2013, 2008, 2006, 2004, 2003, 2001, 2000, 1999, 1996, 1995, 1992, 1991, 1990, 1986, 1985, 1981, 1980, 1976, 1975, 1972, 1971, 1970, 1969, 1967, 1966, 1965, 1964, 1963, 1962, 1961, 1958, 1957, 1956, 1955, 1954, 1952, 1951, 1950, 1949, 1948, 1947, 1946, 1945, 1944, 1942, 1940, 1939, 1938, 1937, 1936, 1935, 1934, 1933, 1932, 1931, 1930, 1929, 1928, 1927, 1926, 1925, 1924, 1923, 1921, 1920 |
| 722 FLOWER | 2013, 2008, 2006, 2004, 2003, 2001, 2000, 1999, 1996, 1995, 1992, 1991, 1990, 1986, 1985, 1981, 1980, 1976, 1975, 1972, 1971, 1970, 1969, 1967, 1966, 1965, 1964, 1963, 1962, 1961, 1960, 1958, 1957, 1956, 1955, 1954, 1952, 1951, 1950, 1949, 1948, 1947, 1946, 1945, 1944, 1942, 1939, 1938, 1937, 1936, 1935, 1934, 1933, 1932, 1931, 1930, 1929, 1928, 1927, 1926, 1925, 1924, 1923, 1921, 1920 |
| 722 FLOWER ST N | 2013, 2008, 2006, 2004, 2003, 2001, 2000, 1999, 1996, 1995, 1992, 1991, 1990, 1986, 1985, 1981, 1980, 1976, 1975, 1972, 1971, 1970, 1969, 1967, 1966, 1965, 1964, 1963, 1962, 1961, 1958, 1957, 1956, 1955, 1954, 1952, 1951, 1950, 1949, 1948, 1947, 1946, 1945, 1944, 1942, 1940, 1939, 1938, 1937, 1936, 1935, 1934, 1933, 1932, 1931, 1930, 1929, 1928, 1927, 1926, 1925, 1924, 1923, 1921, 1920 |
| 724 FLOWER | 2013, 2008, 2006, 2004, 2003, 2001, 2000, 1999, 1996, 1995, 1992, 1991, 1990, 1986, 1985, 1981, 1980, 1976, 1975, 1972, 1971, 1970, 1969, 1967, 1966, 1965, 1964, 1963, 1962, 1961, 1960, 1958, 1957, 1956, 1955, 1954, 1952, 1951, 1950, 1949, 1948, 1947, 1946, 1945, 1944, 1942, 1939, 1938, 1937, 1936, 1935, 1934, 1933, 1932, 1931, 1930, 1929, 1928, 1927, 1926, 1925, 1924, 1923, 1921, 1920 |
| 724 FLOWER ST N | 2013, 2008, 2006, 2004, 2003, 2001, 2000, 1999, 1996, 1995, 1992, 1991, 1990, 1986, 1985, 1981, 1980, 1976, 1975, 1972, 1971, 1970, 1969, 1967, 1966, 1965, 1964, 1963, 1962, 1961, 1958, 1957, 1956, 1955, 1954, 1952, 1951, 1950, 1949, 1948, 1947, 1946, 1945, 1944, 1942, 1940, 1939, 1938, 1937, 1936, 1935, 1934, 1933, 1932, 1931, 1930, 1929, 1928, 1927, 1926, 1925, 1924, 1923, 1921, 1920 |
| 727 FLOWER ST N | 2013, 2008, 2006, 2004, 2003, 2001, 2000, 1999, 1996, 1995, 1992, 1991, 1990, 1986, 1985, 1981, 1980, 1976, 1975, 1972, 1971, 1970, 1969, 1967, 1966, 1965, 1964, 1963, 1962, 1961, 1958, 1957, 1956, 1955, 1954, 1952, 1951, 1950, 1949, 1948, 1947, 1946, 1945, 1944, 1942, 1940, 1939, 1938, 1937, 1936, 1935, 1934, 1933, 1932, 1931, 1930, 1929, 1928, 1927, 1926, 1925, 1924, 1923, 1921, 1920 |
| 727 FLOWER ST S | 2013, 2008, 2006, 2004, 2003, 2001, 2000, 1999, 1996, 1995, 1992, 1991, 1990, 1986, 1985, 1981, 1980, 1976, 1975, 1972, 1971, 1969, 1967, 1966, 1965, 1964, 1963, 1962, 1961, 1960, 1958, 1957, 1956, 1955, 1954, 1952, 1951, 1950, 1949, 1948, 1947, 1946, 1945, 1944, 1942, 1940, 1939, 1938, 1937, 1936, 1935, 1934, 1933, 1932, 1931, 1930, 1929, 1928, 1927, 1926, 1925, 1924, 1923, 1921, 1920 |
| 745 FLOWER | 2013, 2008, 2006, 2004, 2003, 2001, 2000, 1999, 1996, 1995, 1992, 1991, 1990, 1985, 1981, 1980, 1976, 1975, 1972, 1971, 1970, 1969, 1967, 1966, 1965, 1964, 1963, 1962, 1961, 1960, 1958, 1957, 1956, 1955, 1954, 1952, 1951, 1950, 1949, 1948, 1947, 1946, 1945, 1944, 1942, 1940, 1939, 1938, 1937, 1936, 1935, 1934, 1933, 1932, 1931, 1930, 1929, 1928, 1927, 1926, 1925, 1924, 1923, 1921, 1920 |
| 748 FLOWER | 2013, 2008, 2006, 2004, 2003, 2001, 2000, 1999, 1996, 1995, 1992, 1991, 1990, 1986, 1985, 1981, 1980, 1976, 1975, 1972, 1971, 1970, 1969, 1967, 1966, 1965, 1964, 1963, 1962, 1961, 1960, 1958, 1957, 1956, 1955, 1954, 1952, 1951, 1950, 1949, 1948, 1947, 1946, 1945, 1944, 1942, 1940, 1939, 1938, 1937, 1936, 1935, 1934, 1932, 1931, 1930, 1929, 1928, 1927, 1926, 1925, 1924, 1923, 1921, 1920 |

# FINDINGS

| Address Researched | Address Not Identified in Research Source |
|---|---|
| 751 FLOWER | 2013, 2008, 2006, 2004, 2003, 2001, 2000, 1999, 1996, 1995, 1992, 1991, 1990, 1986, 1985, 1981, 1980, 1976, 1975, 1972, 1971, 1970, 1969, 1967, 1966, 1965, 1964, 1963, 1962, 1961, 1960, 1958, 1957, 1956, 1955, 1954, 1952, 1951, 1950, 1949, 1948, 1947, 1946, 1945, 1944, 1942, 1940, 1939, 1938, 1937, 1936, 1935, 1934, 1933, 1932, 1931, 1930, 1929, 1928, 1927, 1926, 1925, 1923, 1921, 1920 |
| 777 FLOWER | 2013, 2008, 2006, 2004, 2003, 2001, 2000, 1999, 1996, 1992, 1991, 1990, 1985, 1980, 1976, 1975, 1972, 1971, 1970, 1969, 1966, 1965, 1964, 1963, 1962, 1961, 1960, 1958, 1957, 1956, 1955, 1954, 1952, 1951, 1950, 1949, 1948, 1947, 1946, 1945, 1944, 1942, 1940, 1939, 1938, 1937, 1936, 1935, 1934, 1933, 1932, 1931, 1930, 1929, 1928, 1927, 1926, 1925, 1924, 1923, 1921, 1920 |
| 777 FLOWER ST | 2013, 2008, 2004, 2003, 2000, 1999, 1996, 1995, 1992, 1991, 1990, 1986, 1985, 1981, 1980, 1976, 1975, 1971, 1969, 1965, 1964, 1963, 1962, 1961, 1960, 1958, 1957, 1956, 1955, 1954, 1952, 1951, 1950, 1949, 1948, 1947, 1946, 1945, 1944, 1942, 1940, 1939, 1938, 1937, 1936, 1935, 1934, 1933, 1932, 1931, 1930, 1929, 1928, 1927, 1926, 1925, 1924, 1923, 1921, 1920 |
| 777 FLOWER ST | 2013, 2006, 2004, 2003, 2001, 2000, 1999, 1996, 1995, 1992, 1991, 1990, 1986, 1985, 1981, 1980, 1976, 1975, 1972, 1971, 1970, 1969, 1967, 1966, 1965, 1964, 1963, 1962, 1961, 1960, 1958, 1957, 1956, 1955, 1954, 1952, 1951, 1950, 1949, 1948, 1947, 1946, 1945, 1944, 1942, 1940, 1939, 1938, 1937, 1936, 1935, 1934, 1933, 1932, 1931, 1930, 1929, 1928, 1927, 1926, 1925, 1924, 1923, 1921, 1920 |
| 780 FLOWER | 2013, 2008, 2006, 2004, 2003, 2001, 2000, 1999, 1996, 1995, 1992, 1991, 1990, 1986, 1985, 1981, 1980, 1976, 1975, 1972, 1971, 1970, 1969, 1966, 1965, 1964, 1963, 1961, 1960, 1958, 1957, 1956, 1955, 1954, 1952, 1951, 1950, 1949, 1948, 1947, 1946, 1945, 1944, 1942, 1940, 1939, 1938, 1937, 1936, 1935, 1934, 1933, 1932, 1931, 1930, 1929, 1928, 1927, 1926, 1925, 1924, 1923, 1921, 1920 |
| 780 FLOWER ST | 2013, 2008, 2006, 2004, 2003, 2001, 2000, 1999, 1996, 1995, 1992, 1991, 1990, 1986, 1985, 1981, 1980, 1976, 1975, 1971, 1970, 1969, 1966, 1965, 1964, 1963, 1962, 1961, 1960, 1958, 1957, 1956, 1955, 1954, 1952, 1951, 1950, 1949, 1948, 1947, 1946, 1945, 1944, 1942, 1940, 1939, 1938, 1937, 1936, 1935, 1934, 1933, 1932, 1931, 1930, 1929, 1928, 1927, 1926, 1925, 1924, 1923, 1921, 1920 |
| 780 FLOWER ST | 2013, 2006, 2004, 2003, 2001, 2000, 1999, 1996, 1995, 1992, 1991, 1990, 1986, 1985, 1981, 1980, 1976, 1975, 1972, 1971, 1970, 1969, 1967, 1966, 1965, 1964, 1963, 1962, 1961, 1960, 1958, 1957, 1956, 1955, 1954, 1952, 1951, 1950, 1949, 1948, 1947, 1946, 1945, 1944, 1942, 1940, 1939, 1938, 1937, 1936, 1935, 1934, 1933, 1932, 1931, 1930, 1929, 1928, 1927, 1926, 1925, 1924, 1923, 1921, 1920 |
| 782 FLOWER | 2013, 2008, 2006, 2004, 2003, 2001, 2000, 1999, 1996, 1995, 1992, 1991, 1990, 1986, 1985, 1981, 1980, 1976, 1975, 1972, 1971, 1970, 1969, 1966, 1965, 1964, 1963, 1962, 1961, 1960, 1958, 1957, 1956, 1955, 1954, 1952, 1951, 1950, 1949, 1948, 1947, 1946, 1945, 1944, 1942, 1940, 1939, 1938, 1937, 1936, 1935, 1934, 1933, 1932, 1931, 1930, 1929, 1928, 1927, 1926, 1925, 1923, 1921, 1920 |
| 782 FLOWER GLN | 2013, 2008, 2006, 2004, 2003, 2001, 2000, 1999, 1996, 1995, 1992, 1991, 1990, 1986, 1985, 1981, 1980, 1976, 1975, 1972, 1971, 1970, 1969, 1966, 1965, 1964, 1963, 1962, 1961, 1960, 1958, 1957, 1956, 1955, 1954, 1952, 1951, 1950, 1949, 1948, 1947, 1946, 1945, 1944, 1942, 1940, 1939, 1938, 1937, 1936, 1935, 1934, 1933, 1932, 1931, 1930, 1929, 1928, 1927, 1926, 1925, 1924, 1923, 1921, 1920 |
| 782 FLOWER ST | 2013, 2008, 2006, 2004, 2003, 2000, 1999, 1996, 1995, 1992, 1991, 1990, 1986, 1985, 1981, 1980, 1976, 1975, 1971, 1970, 1969, 1966, 1965, 1964, 1963, 1962, 1961, 1960, 1958, 1957, 1956, 1955, 1954, 1952, 1951, 1950, 1949, 1948, 1947, 1946, 1945, 1944, 1942, 1940, 1939, 1938, 1937, 1936, 1935, 1934, 1933, 1932, 1931, 1930, 1929, 1928, 1927, 1926, 1925, 1924, 1923, 1921, 1920 |
| 800 FLOWER | 2013, 2008, 2006, 2004, 2003, 2001, 2000, 1999, 1996, 1995, 1992, 1991, 1990, 1986, 1985, 1981, 1980, 1976, 1975, 1972, 1971, 1970, 1969, 1966, 1965, 1964, 1963, 1961, 1960, 1958, 1957, 1956, 1955, 1954, 1952, 1951, 1950, 1949, 1948, 1947, 1946, 1945, 1944, 1942, 1940, 1939, 1938, 1937, 1936, 1935, 1934, 1933, 1932, 1931, 1930, 1929, 1928, 1927, 1926, 1925, 1924, 1923, 1921, 1920 |

# FINDINGS

| Address Researched | Address Not Identified in Research Source |
|---|---|
| 800 FLOWER ST | 2013, 2008, 2004, 2003, 2000, 1999, 1996, 1995, 1992, 1991, 1990, 1986, 1985, 1981, 1976, 1975, 1971, 1970, 1969, 1966, 1965, 1964, 1963, 1962, 1961, 1960, 1958, 1957, 1956, 1955, 1954, 1952, 1951, 1950, 1949, 1948, 1947, 1946, 1945, 1944, 1942, 1940, 1939, 1938, 1937, 1936, 1935, 1934, 1933, 1932, 1931, 1930, 1929, 1928, 1927, 1926, 1925, 1924, 1923, 1921, 1920 |
| 800 FLOWER ST | 2006, 2004, 2003, 2001, 2000, 1999, 1996, 1995, 1992, 1991, 1990, 1986, 1985, 1981, 1980, 1976, 1975, 1972, 1971, 1970, 1969, 1967, 1966, 1965, 1964, 1963, 1962, 1961, 1960, 1958, 1957, 1956, 1955, 1954, 1952, 1951, 1950, 1949, 1948, 1947, 1946, 1945, 1944, 1942, 1940, 1939, 1938, 1937, 1936, 1935, 1934, 1933, 1932, 1931, 1930, 1929, 1928, 1927, 1926, 1925, 1924, 1923, 1921, 1920 |
| 800 FLOWER ST S | 2013, 2008, 2006, 2004, 2003, 2001, 2000, 1999, 1996, 1995, 1992, 1991, 1990, 1986, 1985, 1981, 1980, 1976, 1975, 1972, 1971, 1969, 1967, 1966, 1965, 1964, 1963, 1962, 1961, 1960, 1958, 1957, 1956, 1955, 1954, 1952, 1951, 1950, 1949, 1948, 1947, 1946, 1945, 1944, 1942, 1940, 1939, 1938, 1937, 1936, 1935, 1934, 1933, 1932, 1931, 1930, 1929, 1928, 1927, 1926, 1925, 1924, 1923, 1921, 1920 |
| 800 NORTON AVE | 2013, 2008, 2006, 2004, 2003, 2001, 2000, 1999, 1996, 1995, 1992, 1991, 1990, 1986, 1985, 1981, 1980, 1976, 1975, 1972, 1971, 1970, 1969, 1967, 1966, 1965, 1964, 1963, 1962, 1961, 1960, 1958, 1957, 1956, 1955, 1954, 1952, 1951, 1950, 1949, 1948, 1947, 1946, 1945, 1944, 1940, 1939, 1938, 1937, 1936, 1935, 1934, 1933, 1932, 1931, 1930, 1929, 1928, 1927, 1926, 1925, 1924, 1923, 1921, 1920 |
| 800 NORTON AVE S | 2013, 2008, 2006, 2004, 2003, 2001, 2000, 1999, 1996, 1995, 1992, 1991, 1990, 1986, 1985, 1981, 1980, 1976, 1975, 1972, 1971, 1970, 1969, 1967, 1966, 1965, 1964, 1963, 1962, 1961, 1960, 1958, 1957, 1956, 1955, 1954, 1952, 1950, 1949, 1948, 1947, 1946, 1945, 1944, 1942, 1940, 1939, 1938, 1937, 1936, 1935, 1934, 1933, 1932, 1931, 1930, 1929, 1928, 1927, 1926, 1925, 1924, 1923, 1921, 1920 |
| 801 FLOWER | 2013, 2008, 2006, 2004, 2003, 2001, 2000, 1999, 1996, 1995, 1992, 1991, 1990, 1986, 1985, 1981, 1980, 1976, 1975, 1972, 1971, 1970, 1969, 1967, 1966, 1965, 1964, 1963, 1962, 1961, 1960, 1958, 1957, 1956, 1955, 1954, 1952, 1951, 1950, 1949, 1948, 1947, 1946, 1945, 1944, 1942, 1939, 1938, 1937, 1936, 1934, 1933, 1932, 1931, 1930, 1929, 1928, 1927, 1926, 1925, 1924, 1923, 1921, 1920 |
| 801 FLOWER ST N | 2013, 2008, 2006, 2004, 2003, 2001, 2000, 1999, 1996, 1995, 1992, 1991, 1990, 1986, 1985, 1981, 1980, 1976, 1975, 1972, 1971, 1970, 1969, 1967, 1966, 1965, 1964, 1963, 1962, 1961, 1958, 1957, 1956, 1955, 1954, 1952, 1951, 1950, 1949, 1948, 1947, 1946, 1945, 1944, 1942, 1940, 1939, 1938, 1937, 1936, 1935, 1934, 1933, 1932, 1931, 1930, 1929, 1928, 1927, 1926, 1925, 1924, 1923, 1921, 1920 |
| 801 FLOWER ST S | 2013, 2008, 2006, 2004, 2003, 2001, 2000, 1999, 1996, 1995, 1992, 1991, 1990, 1986, 1985, 1981, 1980, 1976, 1975, 1972, 1971, 1969, 1967, 1966, 1965, 1964, 1963, 1962, 1961, 1960, 1958, 1957, 1956, 1955, 1954, 1952, 1951, 1950, 1949, 1948, 1947, 1946, 1945, 1944, 1942, 1940, 1939, 1938, 1937, 1936, 1935, 1934, 1933, 1932, 1931, 1930, 1929, 1928, 1927, 1926, 1925, 1924, 1923, 1921, 1920 |
| 801 NORTON AVE S | 2013, 2008, 2006, 2004, 2003, 2001, 2000, 1999, 1996, 1995, 1992, 1991, 1990, 1986, 1985, 1981, 1980, 1976, 1975, 1972, 1971, 1970, 1969, 1967, 1966, 1965, 1964, 1963, 1962, 1961, 1960, 1958, 1957, 1956, 1955, 1954, 1952, 1950, 1949, 1948, 1947, 1946, 1945, 1944, 1942, 1940, 1939, 1938, 1937, 1936, 1935, 1934, 1933, 1932, 1931, 1930, 1929, 1928, 1927, 1926, 1925, 1924, 1923, 1921, 1920 |
| 801 S FLOWER ST | 2013, 2008, 2006, 2004, 2003, 2001, 2000, 1999, 1996, 1992, 1990, 1986, 1981, 1980, 1976, 1975, 1972, 1971, 1970, 1969, 1967, 1966, 1965, 1964, 1963, 1962, 1961, 1960, 1958, 1957, 1956, 1955, 1954, 1952, 1951, 1950, 1949, 1948, 1947, 1946, 1945, 1944, 1942, 1940, 1939, 1938, 1937, 1936, 1935, 1934, 1933, 1932, 1931, 1930, 1929, 1928, 1927, 1926, 1925, 1924, 1923, 1921, 1920 |
| 802 NORTON AVE S | 2013, 2008, 2006, 2004, 2003, 2001, 2000, 1999, 1996, 1995, 1992, 1991, 1990, 1986, 1985, 1981, 1980, 1976, 1975, 1972, 1971, 1970, 1969, 1967, 1966, 1965, 1964, 1963, 1962, 1961, 1960, 1958, 1957, 1956, 1955, 1954, 1952, 1950, 1949, 1948, 1947, 1946, 1945, 1944, 1942, 1940, 1939, 1938, 1937, 1936, 1935, 1934, 1933, 1932, 1931, 1930, 1929, 1928, 1927, 1926, 1925, 1924, 1923, 1921, 1920 |

# FINDINGS

| Address Researched | Address Not Identified in Research Source |
|---|---|
| 803 NORTON AVE S | 2013, 2008, 2006, 2004, 2003, 2001, 2000, 1999, 1996, 1995, 1992, 1991, 1990, 1986, 1985, 1981, 1980, 1976, 1975, 1972, 1971, 1970, 1969, 1967, 1966, 1965, 1964, 1963, 1962, 1961, 1960, 1958, 1957, 1956, 1955, 1954, 1952, 1950, 1949, 1948, 1947, 1946, 1945, 1944, 1942, 1940, 1939, 1938, 1937, 1936, 1935, 1934, 1933, 1932, 1931, 1930, 1929, 1928, 1927, 1926, 1925, 1924, 1923, 1921, 1920 |
| 804 FLOWER | 2013, 2008, 2006, 2004, 2003, 2001, 2000, 1999, 1996, 1995, 1992, 1991, 1990, 1986, 1985, 1981, 1980, 1976, 1975, 1972, 1971, 1970, 1969, 1967, 1966, 1965, 1964, 1963, 1962, 1961, 1960, 1958, 1957, 1956, 1955, 1954, 1952, 1951, 1950, 1949, 1948, 1947, 1946, 1945, 1944, 1942, 1940, 1939, 1938, 1937, 1936, 1934, 1933, 1932, 1931, 1930, 1929, 1928, 1927, 1926, 1925, 1924, 1923, 1921, 1920 |
| 804 N NORTON AVE | 2013, 2008, 2006, 2004, 2003, 2001, 2000, 1999, 1996, 1995, 1992, 1991, 1990, 1986, 1985, 1981, 1976, 1975, 1972, 1971, 1969, 1967, 1966, 1965, 1964, 1963, 1962, 1961, 1960, 1958, 1957, 1956, 1955, 1954, 1952, 1951, 1950, 1949, 1948, 1947, 1946, 1945, 1944, 1942, 1940, 1939, 1938, 1937, 1936, 1935, 1934, 1933, 1932, 1931, 1930, 1929, 1928, 1927, 1926, 1925, 1924, 1923, 1921, 1920 |
| 804 NORTON AVE | 2013, 2008, 2004, 2003, 2000, 1999, 1996, 1992, 1990, 1986, 1981, 1980, 1976, 1971, 1970, 1969, 1966, 1965, 1964, 1963, 1962, 1961, 1960, 1958, 1957, 1956, 1955, 1954, 1952, 1951, 1950, 1949, 1948, 1947, 1946, 1945, 1944, 1942, 1940, 1939, 1938, 1937, 1936, 1935, 1934, 1933, 1932, 1931, 1930, 1929, 1928, 1927, 1926, 1925, 1924, 1923, 1921, 1920 |
| 804 NORTON ST | 2013, 2008, 2006, 2004, 2003, 2001, 2000, 1999, 1996, 1995, 1992, 1991, 1990, 1986, 1985, 1981, 1980, 1976, 1972, 1971, 1970, 1969, 1967, 1966, 1965, 1964, 1963, 1962, 1961, 1960, 1958, 1957, 1956, 1955, 1954, 1952, 1951, 1950, 1949, 1948, 1947, 1946, 1945, 1944, 1942, 1940, 1939, 1938, 1937, 1936, 1935, 1934, 1933, 1932, 1931, 1930, 1929, 1928, 1927, 1926, 1925, 1924, 1923, 1921, 1920 |
| 805 FLOWER | 2013, 2008, 2006, 2004, 2003, 2001, 2000, 1999, 1996, 1995, 1992, 1991, 1990, 1986, 1985, 1981, 1980, 1976, 1975, 1972, 1971, 1970, 1969, 1967, 1966, 1965, 1964, 1963, 1962, 1961, 1960, 1958, 1957, 1956, 1955, 1954, 1952, 1951, 1950, 1949, 1948, 1947, 1946, 1945, 1944, 1942, 1939, 1938, 1937, 1936, 1934, 1933, 1932, 1931, 1930, 1929, 1928, 1927, 1926, 1925, 1924, 1923, 1921, 1920 |
| 805 FLOWER ST | 2013, 2008, 2006, 2004, 2003, 2000, 1999, 1996, 1995, 1992, 1991, 1990, 1986, 1985, 1981, 1980, 1976, 1975, 1972, 1971, 1970, 1969, 1967, 1966, 1965, 1964, 1963, 1962, 1961, 1960, 1958, 1957, 1956, 1955, 1954, 1952, 1951, 1950, 1949, 1948, 1947, 1946, 1945, 1944, 1942, 1940, 1939, 1938, 1937, 1936, 1935, 1934, 1933, 1932, 1931, 1930, 1929, 1928, 1927, 1926, 1925, 1924, 1923, 1921, 1920 |
| 805 FLOWER ST N | 2013, 2008, 2006, 2004, 2003, 2001, 2000, 1999, 1996, 1995, 1992, 1991, 1990, 1986, 1985, 1981, 1980, 1976, 1975, 1972, 1971, 1970, 1969, 1967, 1966, 1965, 1964, 1963, 1962, 1961, 1958, 1957, 1956, 1955, 1954, 1952, 1951, 1950, 1949, 1948, 1947, 1946, 1945, 1944, 1942, 1940, 1939, 1938, 1937, 1936, 1935, 1934, 1933, 1932, 1931, 1930, 1929, 1928, 1927, 1926, 1925, 1924, 1923, 1921, 1920 |
| 806 1/2 NORTON AVE | 2013, 2008, 2006, 2004, 2003, 2001, 2000, 1999, 1996, 1995, 1992, 1991, 1990, 1986, 1985, 1980, 1976, 1975, 1972, 1971, 1970, 1969, 1967, 1966, 1965, 1964, 1963, 1962, 1961, 1960, 1958, 1957, 1956, 1955, 1954, 1952, 1951, 1950, 1949, 1948, 1947, 1946, 1945, 1944, 1942, 1940, 1939, 1938, 1937, 1936, 1935, 1934, 1933, 1932, 1931, 1930, 1929, 1928, 1927, 1926, 1925, 1924, 1923, 1921, 1920 |
| 806 FLOWER | 2013, 2008, 2006, 2004, 2003, 2001, 2000, 1999, 1996, 1995, 1992, 1991, 1990, 1986, 1985, 1981, 1980, 1976, 1975, 1972, 1971, 1970, 1969, 1967, 1966, 1965, 1964, 1963, 1962, 1961, 1960, 1958, 1957, 1956, 1955, 1954, 1952, 1951, 1950, 1949, 1948, 1947, 1946, 1945, 1944, 1942, 1939, 1938, 1937, 1936, 1935, 1934, 1933, 1932, 1931, 1930, 1929, 1928, 1927, 1926, 1925, 1924, 1923, 1921, 1920 |
| 806 FLOWER ST N | 2013, 2008, 2006, 2004, 2003, 2001, 2000, 1999, 1996, 1995, 1992, 1991, 1990, 1986, 1985, 1981, 1980, 1976, 1975, 1972, 1971, 1970, 1969, 1967, 1966, 1965, 1964, 1963, 1962, 1961, 1958, 1957, 1956, 1955, 1954, 1952, 1951, 1950, 1949, 1948, 1947, 1946, 1945, 1944, 1942, 1940, 1939, 1938, 1937, 1936, 1935, 1934, 1933, 1932, 1931, 1930, 1929, 1928, 1927, 1926, 1925, 1924, 1923, 1921, 1920 |

# FINDINGS

| Address Researched | Address Not Identified in Research Source |
|---|---|
| 806 NORTON AVE S | 2013, 2008, 2006, 2004, 2003, 2001, 2000, 1999, 1996, 1995, 1992, 1991, 1990, 1986, 1985, 1981, 1980, 1976, 1975, 1972, 1971, 1970, 1969, 1967, 1966, 1965, 1964, 1963, 1962, 1961, 1960, 1958, 1957, 1956, 1955, 1954, 1952, 1950, 1949, 1948, 1947, 1946, 1945, 1944, 1942, 1940, 1939, 1938, 1937, 1936, 1935, 1934, 1933, 1932, 1931, 1930, 1929, 1928, 1927, 1926, 1925, 1924, 1923, 1921, 1920 |
| 807 Air Way | 2013, 2008, 2006, 2004, 2003, 2000, 1999, 1996, 1992, 1990, 1986, 1976, 1969, 1966, 1965, 1964, 1963, 1962, 1961, 1960, 1958, 1957, 1956, 1955, 1954, 1952, 1951, 1950, 1949, 1948, 1947, 1946, 1945, 1944, 1942, 1940, 1939, 1938, 1937, 1936, 1935, 1934, 1933, 1932, 1931, 1930, 1929, 1928, 1927, 1926, 1925, 1924, 1923, 1921, 1920 |
| 810 FLOWER | 2013, 2008, 2006, 2004, 2003, 2001, 2000, 1999, 1996, 1995, 1992, 1991, 1990, 1986, 1985, 1981, 1980, 1976, 1975, 1972, 1971, 1970, 1969, 1967, 1966, 1965, 1964, 1963, 1962, 1961, 1960, 1958, 1957, 1956, 1955, 1954, 1952, 1951, 1950, 1949, 1948, 1947, 1946, 1945, 1944, 1942, 1939, 1938, 1937, 1936, 1935, 1934, 1933, 1932, 1931, 1930, 1929, 1928, 1927, 1926, 1925, 1924, 1923, 1921, 1920 |
| 810 FLOWER ST N | 2013, 2008, 2006, 2004, 2003, 2001, 2000, 1999, 1996, 1995, 1992, 1991, 1990, 1986, 1985, 1981, 1980, 1976, 1975, 1972, 1971, 1970, 1969, 1967, 1966, 1965, 1964, 1963, 1962, 1961, 1958, 1957, 1956, 1955, 1954, 1952, 1951, 1950, 1949, 1948, 1947, 1946, 1945, 1944, 1942, 1940, 1939, 1938, 1937, 1936, 1935, 1934, 1933, 1932, 1931, 1930, 1929, 1928, 1927, 1926, 1925, 1924, 1923, 1921, 1920 |
| 810 N NORTON AVE | 2013, 2008, 2006, 2004, 2003, 2001, 2000, 1999, 1996, 1995, 1992, 1991, 1990, 1986, 1985, 1981, 1976, 1975, 1972, 1971, 1969, 1967, 1966, 1965, 1964, 1963, 1961, 1960, 1958, 1957, 1955, 1954, 1952, 1951, 1949, 1948, 1947, 1946, 1945, 1944, 1940, 1939, 1938, 1937, 1936, 1935, 1934, 1933, 1932, 1931, 1930, 1929, 1928, 1927, 1926, 1925, 1924, 1923, 1921, 1920 |
| 810 NORTON AVE | 2013, 2008, 2004, 2003, 2000, 1999, 1996, 1992, 1990, 1986, 1981, 1980, 1976, 1971, 1970, 1969, 1966, 1965, 1964, 1963, 1962, 1961, 1960, 1958, 1957, 1956, 1954, 1952, 1950, 1949, 1948, 1947, 1946, 1945, 1944, 1942, 1940, 1939, 1938, 1937, 1936, 1935, 1934, 1933, 1932, 1931, 1930, 1929, 1928, 1927, 1926, 1925, 1924, 1923, 1921, 1920 |
| 810 NORTON AVE S | 2013, 2008, 2006, 2004, 2003, 2001, 2000, 1999, 1996, 1995, 1992, 1991, 1990, 1986, 1985, 1981, 1980, 1976, 1975, 1972, 1971, 1970, 1969, 1967, 1966, 1965, 1964, 1963, 1962, 1961, 1960, 1958, 1957, 1956, 1955, 1954, 1952, 1950, 1949, 1948, 1947, 1946, 1945, 1944, 1942, 1940, 1939, 1938, 1937, 1936, 1935, 1934, 1933, 1932, 1931, 1930, 1929, 1928, 1927, 1926, 1925, 1924, 1923, 1921, 1920 |
| 810 NORTON ST | 2013, 2008, 2006, 2004, 2003, 2001, 2000, 1999, 1996, 1995, 1992, 1991, 1990, 1986, 1985, 1981, 1980, 1976, 1972, 1971, 1970, 1969, 1967, 1966, 1965, 1964, 1963, 1962, 1961, 1960, 1958, 1957, 1956, 1955, 1954, 1952, 1951, 1950, 1949, 1948, 1947, 1946, 1945, 1944, 1942, 1940, 1939, 1938, 1937, 1936, 1935, 1934, 1933, 1932, 1931, 1930, 1929, 1928, 1927, 1926, 1925, 1924, 1923, 1921, 1920 |
| 810 PELANCON AVE | 2013, 2008, 2006, 2004, 2003, 2000, 1999, 1996, 1995, 1992, 1991, 1990, 1986, 1985, 1981, 1980, 1976, 1975, 1972, 1971, 1970, 1969, 1967, 1966, 1965, 1964, 1963, 1962, 1961, 1960, 1958, 1957, 1956, 1955, 1954, 1952, 1951, 1950, 1949, 1948, 1947, 1946, 1945, 1944, 1942, 1940, 1939, 1938, 1937, 1936, 1935, 1934, 1933, 1932, 1931, 1930, 1929, 1928, 1927, 1926, 1925, 1924, 1923, 1921, 1920 |
| 810 PELANCONI AVE | 2013, 2008, 2004, 2003, 2001, 2000, 1999, 1996, 1995, 1992, 1990, 1986, 1981, 1980, 1976, 1975, 1971, 1970, 1969, 1966, 1965, 1964, 1963, 1962, 1961, 1958, 1957, 1956, 1954, 1952, 1950, 1949, 1948, 1947, 1946, 1945, 1944, 1942, 1940, 1939, 1938, 1937, 1936, 1935, 1934, 1933, 1932, 1931, 1930, 1929, 1928, 1927, 1926, 1925, 1924, 1923, 1921, 1920 |
| 810 PELANCONI AVE N | 2013, 2008, 2006, 2004, 2003, 2001, 2000, 1999, 1996, 1995, 1992, 1991, 1990, 1986, 1985, 1981, 1980, 1976, 1975, 1972, 1971, 1970, 1969, 1967, 1966, 1965, 1964, 1963, 1962, 1961, 1960, 1958, 1957, 1956, 1955, 1954, 1952, 1951, 1950, 1949, 1948, 1947, 1946, 1944, 1942, 1939, 1938, 1937, 1936, 1935, 1934, 1933, 1932, 1931, 1930, 1929, 1928, 1927, 1926, 1925, 1924, 1923, 1921, 1920 |

# FINDINGS

| Address Researched | Address Not Identified in Research Source |
|---|---|
| 811 1/2 PELANCONI AVE | 2013, 2008, 2006, 2004, 2003, 2001, 2000, 1999, 1996, 1995, 1992, 1991, 1990, 1986, 1985, 1981, 1980, 1976, 1975, 1972, 1971, 1970, 1969, 1967, 1966, 1965, 1964, 1963, 1962, 1961, 1960, 1958, 1957, 1956, 1954, 1952, 1951, 1950, 1949, 1948, 1947, 1946, 1945, 1944, 1942, 1940, 1939, 1938, 1937, 1936, 1935, 1934, 1933, 1932, 1931, 1930, 1929, 1928, 1927, 1926, 1925, 1924, 1923, 1921, 1920 |
| 811 AIR WAY | 2013, 2008, 2006, 2004, 2003, 2000, 1999, 1996, 1995, 1992, 1991, 1985, 1981, 1976, 1975, 1972, 1971, 1970, 1969, 1966, 1965, 1964, 1963, 1962, 1961, 1957, 1956, 1954, 1952, 1951, 1950, 1949, 1948, 1947, 1946, 1945, 1944, 1942, 1940, 1939, 1938, 1937, 1936, 1935, 1934, 1933, 1932, 1931, 1930, 1929, 1928, 1927, 1926, 1925, 1924, 1923, 1921, 1920 |
| 811 FLOWER | 2013, 2008, 2006, 2004, 2003, 2001, 2000, 1999, 1996, 1995, 1992, 1991, 1990, 1986, 1985, 1981, 1980, 1976, 1975, 1972, 1971, 1970, 1969, 1967, 1966, 1965, 1964, 1963, 1962, 1961, 1960, 1958, 1957, 1956, 1955, 1954, 1952, 1951, 1950, 1949, 1948, 1947, 1946, 1945, 1944, 1942, 1939, 1938, 1937, 1936, 1934, 1933, 1932, 1931, 1930, 1929, 1928, 1927, 1926, 1925, 1924, 1923, 1921, 1920 |
| 811 FLOWER ST N | 2013, 2008, 2006, 2004, 2003, 2001, 2000, 1999, 1996, 1995, 1992, 1991, 1990, 1986, 1985, 1981, 1980, 1976, 1975, 1972, 1971, 1970, 1969, 1967, 1966, 1965, 1964, 1963, 1962, 1961, 1958, 1957, 1956, 1955, 1954, 1952, 1951, 1950, 1949, 1948, 1947, 1946, 1945, 1944, 1942, 1940, 1939, 1938, 1937, 1936, 1935, 1934, 1933, 1932, 1931, 1930, 1929, 1928, 1927, 1926, 1925, 1924, 1923, 1921, 1920 |
| 811 NORTON AVE S | 2013, 2008, 2006, 2004, 2003, 2001, 2000, 1999, 1996, 1995, 1992, 1991, 1990, 1986, 1985, 1981, 1980, 1976, 1975, 1972, 1971, 1970, 1969, 1967, 1966, 1965, 1964, 1963, 1962, 1961, 1960, 1958, 1957, 1956, 1955, 1954, 1952, 1950, 1949, 1948, 1947, 1946, 1945, 1944, 1942, 1940, 1939, 1938, 1937, 1936, 1935, 1934, 1933, 1932, 1931, 1930, 1929, 1928, 1927, 1926, 1925, 1924, 1923, 1921, 1920 |
| 811 PELANCON AVE | 2013, 2008, 2006, 2004, 2003, 2000, 1999, 1996, 1995, 1992, 1991, 1990, 1986, 1985, 1981, 1980, 1976, 1975, 1972, 1971, 1970, 1969, 1967, 1966, 1965, 1964, 1963, 1962, 1961, 1960, 1958, 1957, 1956, 1955, 1954, 1952, 1951, 1950, 1949, 1948, 1947, 1946, 1945, 1944, 1942, 1940, 1939, 1938, 1937, 1936, 1935, 1934, 1933, 1932, 1931, 1930, 1929, 1928, 1927, 1926, 1925, 1924, 1923, 1921, 1920 |
| 811 PELANCONI AVE | 2013, 2008, 2004, 2003, 2001, 2000, 1999, 1996, 1992, 1990, 1986, 1985, 1981, 1980, 1976, 1971, 1970, 1969, 1966, 1965, 1964, 1963, 1962, 1961, 1958, 1957, 1956, 1954, 1952, 1950, 1949, 1948, 1947, 1946, 1945, 1944, 1942, 1940, 1939, 1938, 1937, 1936, 1935, 1934, 1933, 1932, 1931, 1930, 1929, 1928, 1927, 1926, 1925, 1924, 1923, 1921, 1920 |
| 811 PELANCONI AVE N | 2013, 2008, 2006, 2004, 2003, 2001, 2000, 1999, 1996, 1995, 1992, 1991, 1990, 1986, 1985, 1981, 1980, 1976, 1975, 1972, 1971, 1970, 1969, 1967, 1966, 1965, 1964, 1963, 1962, 1961, 1960, 1958, 1957, 1956, 1955, 1954, 1952, 1951, 1950, 1949, 1948, 1947, 1946, 1944, 1942, 1939, 1938, 1937, 1936, 1935, 1934, 1933, 1932, 1931, 1930, 1929, 1928, 1927, 1926, 1925, 1924, 1923, 1921, 1920 |
| 812 FLOWER | 2013, 2008, 2006, 2004, 2003, 2001, 2000, 1999, 1996, 1995, 1992, 1991, 1990, 1986, 1985, 1981, 1980, 1976, 1975, 1972, 1971, 1970, 1969, 1967, 1966, 1965, 1964, 1963, 1962, 1961, 1960, 1958, 1957, 1956, 1955, 1954, 1952, 1951, 1950, 1949, 1948, 1947, 1946, 1945, 1944, 1942, 1939, 1938, 1937, 1936, 1934, 1933, 1932, 1931, 1930, 1929, 1928, 1927, 1926, 1925, 1924, 1923, 1921, 1920 |
| 812 NORTON | 2013, 2008, 2006, 2004, 2003, 2001, 2000, 1999, 1996, 1995, 1992, 1991, 1990, 1986, 1985, 1981, 1980, 1976, 1975, 1972, 1971, 1970, 1969, 1967, 1966, 1965, 1964, 1963, 1962, 1961, 1960, 1958, 1957, 1956, 1955, 1954, 1952, 1951, 1950, 1949, 1948, 1947, 1946, 1945, 1944, 1942, 1940, 1939, 1938, 1937, 1936, 1935, 1934, 1932, 1931, 1930, 1929, 1928, 1927, 1926, 1925, 1924, 1923, 1921, 1920 |
| 812 NORTON AVE S | 2013, 2008, 2006, 2004, 2003, 2001, 2000, 1999, 1996, 1995, 1992, 1991, 1990, 1986, 1985, 1981, 1980, 1976, 1975, 1972, 1971, 1970, 1969, 1967, 1966, 1965, 1964, 1963, 1962, 1961, 1960, 1958, 1957, 1956, 1955, 1954, 1952, 1950, 1949, 1948, 1947, 1946, 1945, 1944, 1942, 1940, 1939, 1938, 1937, 1936, 1935, 1934, 1933, 1932, 1931, 1930, 1929, 1928, 1927, 1926, 1925, 1924, 1923, 1921, 1920 |

# FINDINGS

| Address Researched | Address Not Identified in Research Source |
|---|---|
| 812 PELANCONI AVE | 2013, 2008, 2006, 2004, 2003, 2001, 2000, 1999, 1996, 1995, 1992, 1991, 1990, 1986, 1985, 1981, 1980, 1976, 1971, 1970, 1969, 1966, 1965, 1964, 1963, 1962, 1961, 1958, 1957, 1956, 1954, 1952, 1950, 1949, 1948, 1947, 1946, 1945, 1944, 1942, 1940, 1939, 1938, 1937, 1936, 1935, 1934, 1933, 1932, 1931, 1930, 1929, 1928, 1927, 1926, 1925, 1924, 1923, 1921, 1920 |
| 812 PELANCONI AVE N | 2013, 2008, 2006, 2004, 2003, 2001, 2000, 1999, 1996, 1995, 1992, 1991, 1990, 1986, 1985, 1981, 1980, 1976, 1975, 1972, 1971, 1970, 1969, 1967, 1966, 1965, 1964, 1963, 1962, 1961, 1960, 1958, 1957, 1956, 1955, 1954, 1952, 1951, 1950, 1949, 1948, 1947, 1946, 1944, 1942, 1939, 1938, 1937, 1936, 1935, 1934, 1933, 1932, 1931, 1930, 1929, 1928, 1927, 1926, 1925, 1924, 1923, 1921, 1920 |
| 813 NORTON AVE | 2013, 2008, 2004, 2003, 2001, 2000, 1999, 1996, 1995, 1992, 1991, 1990, 1986, 1985, 1981, 1980, 1976, 1975, 1972, 1971, 1970, 1969, 1967, 1966, 1965, 1964, 1963, 1962, 1961, 1960, 1958, 1957, 1956, 1955, 1954, 1952, 1951, 1950, 1949, 1948, 1947, 1946, 1945, 1944, 1942, 1940, 1939, 1938, 1937, 1936, 1935, 1934, 1933, 1932, 1931, 1930, 1929, 1928, 1927, 1926, 1925, 1924, 1923, 1921, 1920 |
| 814 N NORTON AVE | 2013, 2008, 2006, 2004, 2003, 2001, 2000, 1999, 1996, 1995, 1992, 1991, 1990, 1986, 1985, 1981, 1976, 1975, 1972, 1971, 1969, 1967, 1966, 1965, 1964, 1963, 1961, 1960, 1958, 1957, 1955, 1954, 1952, 1951, 1949, 1948, 1947, 1946, 1945, 1944, 1942, 1940, 1939, 1938, 1937, 1936, 1935, 1934, 1933, 1932, 1931, 1930, 1929, 1928, 1927, 1926, 1925, 1924, 1923, 1921, 1920 |
| 814 NORTON AVE | 2013, 2008, 2004, 2003, 2000, 1999, 1996, 1992, 1990, 1986, 1981, 1980, 1976, 1975, 1971, 1970, 1969, 1966, 1965, 1964, 1963, 1962, 1961, 1958, 1957, 1956, 1954, 1952, 1950, 1949, 1948, 1947, 1946, 1945, 1944, 1942, 1940, 1939, 1938, 1937, 1936, 1935, 1934, 1933, 1932, 1931, 1930, 1928, 1927, 1926, 1925, 1924, 1923, 1921, 1920 |
| 814 NORTON AVE N | 2013, 2008, 2006, 2004, 2003, 2001, 2000, 1999, 1996, 1995, 1992, 1991, 1990, 1986, 1985, 1981, 1980, 1976, 1975, 1972, 1971, 1970, 1969, 1967, 1966, 1965, 1964, 1963, 1962, 1961, 1960, 1958, 1957, 1956, 1955, 1954, 1952, 1951, 1950, 1949, 1948, 1947, 1946, 1944, 1942, 1939, 1938, 1937, 1936, 1935, 1934, 1933, 1932, 1931, 1930, 1929, 1928, 1927, 1926, 1925, 1924, 1923, 1921, 1920 |
| 814 NORTON AVE S | 2013, 2008, 2006, 2004, 2003, 2001, 2000, 1999, 1996, 1995, 1992, 1991, 1990, 1986, 1985, 1981, 1980, 1976, 1975, 1972, 1971, 1970, 1969, 1967, 1966, 1965, 1964, 1963, 1962, 1961, 1960, 1958, 1957, 1956, 1955, 1954, 1952, 1950, 1949, 1948, 1947, 1946, 1945, 1944, 1942, 1940, 1939, 1938, 1937, 1936, 1935, 1934, 1933, 1932, 1931, 1930, 1929, 1928, 1927, 1926, 1925, 1924, 1923, 1921, 1920 |
| 814 NORTON ST | 2013, 2008, 2006, 2004, 2003, 2001, 2000, 1999, 1996, 1995, 1992, 1991, 1990, 1986, 1985, 1981, 1980, 1976, 1972, 1971, 1970, 1969, 1967, 1966, 1965, 1964, 1963, 1962, 1961, 1960, 1958, 1957, 1956, 1955, 1954, 1952, 1951, 1950, 1949, 1948, 1947, 1946, 1945, 1944, 1942, 1940, 1939, 1938, 1937, 1936, 1935, 1934, 1933, 1932, 1931, 1930, 1929, 1928, 1927, 1926, 1925, 1924, 1923, 1921, 1920 |
| 814 PELANCON AVE | 2013, 2008, 2006, 2004, 2003, 2000, 1999, 1996, 1995, 1992, 1991, 1990, 1986, 1985, 1981, 1980, 1976, 1975, 1972, 1971, 1970, 1969, 1967, 1966, 1965, 1964, 1963, 1962, 1961, 1960, 1958, 1957, 1956, 1955, 1954, 1952, 1951, 1950, 1949, 1948, 1947, 1946, 1945, 1944, 1942, 1940, 1939, 1938, 1937, 1936, 1935, 1934, 1933, 1932, 1931, 1930, 1929, 1928, 1927, 1926, 1925, 1924, 1923, 1921, 1920 |
| 814 PELANCONI AVE | 2013, 2008, 2004, 2003, 2001, 2000, 1999, 1996, 1995, 1992, 1990, 1986, 1981, 1980, 1976, 1971, 1970, 1969, 1966, 1965, 1964, 1963, 1962, 1961, 1958, 1957, 1956, 1954, 1952, 1950, 1949, 1948, 1947, 1946, 1945, 1944, 1942, 1940, 1939, 1938, 1937, 1936, 1935, 1934, 1933, 1932, 1931, 1930, 1929, 1928, 1927, 1926, 1925, 1924, 1923, 1921, 1920 |
| 814 PELANCONI AVE N | 2013, 2008, 2006, 2004, 2003, 2001, 2000, 1999, 1996, 1995, 1992, 1991, 1990, 1986, 1985, 1981, 1980, 1976, 1975, 1972, 1971, 1970, 1969, 1967, 1966, 1965, 1964, 1963, 1962, 1961, 1960, 1958, 1957, 1956, 1955, 1954, 1952, 1951, 1950, 1949, 1948, 1947, 1946, 1945, 1944, 1942, 1939, 1938, 1937, 1936, 1935, 1934, 1933, 1932, 1931, 1930, 1929, 1928, 1927, 1926, 1925, 1924, 1923, 1921, 1920 |

# FINDINGS

| Address Researched | Address Not Identified in Research Source |
|---|---|
| 814A PELANCONI AVE | 2013, 2008, 2006, 2004, 2003, 2001, 2000, 1999, 1996, 1995, 1992, 1991, 1990, 1986, 1985, 1981, 1980, 1976, 1975, 1971, 1970, 1969, 1967, 1966, 1965, 1964, 1963, 1962, 1961, 1958, 1957, 1956, 1955, 1954, 1952, 1951, 1950, 1949, 1948, 1947, 1946, 1945, 1944, 1942, 1940, 1939, 1938, 1937, 1936, 1935, 1934, 1933, 1932, 1931, 1930, 1929, 1928, 1927, 1926, 1925, 1924, 1923, 1921, 1920 |
| 815 FLOWER ST N | 2013, 2008, 2006, 2004, 2003, 2001, 2000, 1999, 1996, 1995, 1992, 1991, 1990, 1986, 1985, 1981, 1980, 1976, 1975, 1972, 1971, 1970, 1969, 1967, 1966, 1965, 1964, 1963, 1962, 1961, 1958, 1957, 1956, 1955, 1954, 1952, 1951, 1950, 1949, 1948, 1947, 1946, 1945, 1944, 1942, 1940, 1939, 1938, 1937, 1936, 1935, 1934, 1933, 1932, 1931, 1930, 1929, 1928, 1927, 1926, 1925, 1924, 1923, 1921, 1920 |
| 815 N NORTON AVE | 2013, 2008, 2006, 2004, 2003, 2001, 2000, 1999, 1996, 1995, 1992, 1991, 1990, 1986, 1985, 1981, 1976, 1975, 1972, 1971, 1969, 1967, 1966, 1965, 1964, 1963, 1961, 1960, 1958, 1957, 1955, 1954, 1952, 1951, 1949, 1948, 1947, 1946, 1945, 1944, 1942, 1940, 1939, 1938, 1937, 1936, 1935, 1934, 1933, 1932, 1931, 1930, 1929, 1928, 1927, 1926, 1925, 1924, 1923, 1921, 1920 |
| 815 NORTON AVE | 2013, 2008, 2004, 2003, 2000, 1999, 1996, 1995, 1992, 1990, 1986, 1985, 1981, 1980, 1976, 1975, 1971, 1970, 1969, 1966, 1965, 1964, 1963, 1962, 1961, 1958, 1957, 1956, 1954, 1952, 1950, 1949, 1948, 1947, 1946, 1945, 1944, 1942, 1940, 1939, 1938, 1937, 1936, 1935, 1934, 1933, 1932, 1931, 1930, 1929, 1928, 1927, 1926, 1925, 1924, 1923, 1921, 1920 |
| 815 NORTON AVE N | 2013, 2008, 2006, 2004, 2003, 2001, 2000, 1999, 1996, 1995, 1992, 1991, 1990, 1986, 1985, 1981, 1980, 1976, 1975, 1972, 1971, 1970, 1969, 1967, 1966, 1965, 1964, 1963, 1962, 1961, 1960, 1958, 1957, 1956, 1955, 1954, 1952, 1951, 1950, 1949, 1948, 1947, 1946, 1944, 1942, 1940, 1939, 1938, 1937, 1936, 1935, 1934, 1933, 1932, 1931, 1930, 1929, 1928, 1927, 1926, 1925, 1924, 1923, 1921, 1920 |
| 815 NORTON ST | 2013, 2008, 2006, 2004, 2003, 2001, 2000, 1999, 1996, 1995, 1992, 1991, 1990, 1986, 1985, 1981, 1980, 1976, 1972, 1971, 1970, 1969, 1967, 1966, 1965, 1964, 1963, 1962, 1961, 1960, 1958, 1957, 1956, 1955, 1954, 1952, 1951, 1950, 1949, 1948, 1947, 1946, 1945, 1944, 1942, 1940, 1939, 1938, 1937, 1936, 1935, 1934, 1933, 1932, 1931, 1930, 1929, 1928, 1927, 1926, 1925, 1924, 1923, 1921, 1920 |
| 815 PELANCON AVE | 2013, 2008, 2006, 2004, 2003, 2000, 1999, 1996, 1995, 1992, 1991, 1990, 1986, 1985, 1981, 1980, 1976, 1975, 1972, 1971, 1970, 1969, 1967, 1966, 1965, 1964, 1963, 1962, 1961, 1960, 1958, 1957, 1956, 1955, 1954, 1952, 1951, 1950, 1949, 1948, 1947, 1946, 1945, 1944, 1942, 1940, 1939, 1938, 1937, 1936, 1935, 1934, 1933, 1932, 1931, 1930, 1929, 1928, 1927, 1926, 1925, 1924, 1923, 1921, 1920 |
| 815 PELANCONI | 2013, 2008, 2006, 2004, 2003, 2001, 2000, 1999, 1996, 1995, 1992, 1991, 1990, 1986, 1985, 1981, 1980, 1976, 1975, 1972, 1971, 1970, 1969, 1967, 1966, 1965, 1964, 1963, 1961, 1960, 1958, 1957, 1956, 1955, 1954, 1952, 1951, 1950, 1949, 1948, 1947, 1946, 1945, 1944, 1942, 1940, 1939, 1938, 1937, 1936, 1935, 1934, 1933, 1932, 1931, 1930, 1929, 1928, 1927, 1926, 1925, 1924, 1923, 1921, 1920 |
| 815 PELANCONI AVE | 2013, 2008, 2004, 2003, 2001, 2000, 1999, 1996, 1995, 1992, 1991, 1990, 1986, 1981, 1980, 1976, 1971, 1970, 1969, 1966, 1965, 1964, 1963, 1962, 1961, 1957, 1956, 1954, 1952, 1950, 1949, 1948, 1947, 1946, 1945, 1944, 1942, 1940, 1939, 1938, 1937, 1936, 1935, 1934, 1933, 1932, 1931, 1930, 1929, 1928, 1927, 1926, 1925, 1924, 1923, 1921, 1920 |
| 815 PELANCONI AVE N | 2013, 2008, 2006, 2004, 2003, 2001, 2000, 1999, 1996, 1995, 1992, 1991, 1990, 1986, 1985, 1981, 1980, 1976, 1975, 1972, 1971, 1970, 1969, 1967, 1966, 1965, 1964, 1963, 1962, 1961, 1960, 1958, 1957, 1956, 1955, 1954, 1952, 1951, 1950, 1949, 1948, 1947, 1946, 1944, 1942, 1939, 1938, 1937, 1936, 1935, 1934, 1933, 1932, 1931, 1930, 1929, 1928, 1927, 1926, 1925, 1924, 1923, 1921, 1920 |
| 817 NORTON AVE | 2013, 2008, 2006, 2004, 2003, 2001, 2000, 1999, 1996, 1995, 1992, 1991, 1990, 1986, 1985, 1981, 1980, 1976, 1975, 1972, 1971, 1970, 1969, 1967, 1966, 1965, 1964, 1963, 1962, 1961, 1960, 1958, 1957, 1956, 1955, 1954, 1952, 1951, 1950, 1949, 1948, 1947, 1946, 1945, 1944, 1942, 1940, 1939, 1938, 1937, 1936, 1935, 1934, 1932, 1931, 1930, 1929, 1928, 1927, 1926, 1925, 1924, 1923, 1921, 1920 |

# FINDINGS

| Address Researched | Address Not Identified in Research Source |
|---|---|
| 817 NORTON AVE S | 2013, 2008, 2006, 2004, 2003, 2001, 2000, 1999, 1996, 1995, 1992, 1991, 1990, 1986, 1985, 1981, 1980, 1976, 1975, 1972, 1971, 1970, 1969, 1967, 1966, 1965, 1964, 1963, 1962, 1961, 1960, 1958, 1957, 1956, 1955, 1954, 1952, 1950, 1949, 1948, 1947, 1946, 1945, 1944, 1942, 1940, 1939, 1938, 1937, 1936, 1935, 1934, 1933, 1932, 1931, 1930, 1929, 1928, 1927, 1926, 1925, 1924, 1923, 1921, 1920 |
| 818 FLOWER | 2013, 2008, 2006, 2004, 2003, 2001, 2000, 1999, 1996, 1995, 1992, 1991, 1990, 1986, 1985, 1981, 1980, 1976, 1975, 1972, 1971, 1970, 1969, 1967, 1966, 1965, 1964, 1963, 1962, 1961, 1960, 1958, 1957, 1956, 1955, 1954, 1952, 1951, 1950, 1949, 1948, 1947, 1946, 1945, 1944, 1942, 1939, 1938, 1937, 1936, 1934, 1933, 1932, 1931, 1930, 1929, 1928, 1927, 1926, 1925, 1924, 1923, 1921, 1920 |
| 818 FLOWER ST N | 2013, 2008, 2006, 2004, 2003, 2001, 2000, 1999, 1996, 1995, 1992, 1991, 1990, 1986, 1985, 1981, 1980, 1976, 1975, 1972, 1971, 1970, 1969, 1967, 1966, 1965, 1964, 1963, 1962, 1961, 1958, 1957, 1956, 1955, 1954, 1952, 1951, 1950, 1949, 1948, 1947, 1946, 1945, 1944, 1942, 1940, 1939, 1938, 1937, 1936, 1935, 1934, 1933, 1932, 1931, 1930, 1929, 1928, 1927, 1926, 1925, 1924, 1923, 1921, 1920 |
| 818 N NORTON AVE | 2013, 2008, 2006, 2004, 2003, 2001, 2000, 1999, 1996, 1995, 1992, 1990, 1986, 1985, 1981, 1976, 1975, 1972, 1971, 1969, 1967, 1966, 1965, 1964, 1963, 1961, 1960, 1958, 1957, 1955, 1954, 1952, 1951, 1949, 1948, 1947, 1946, 1945, 1944, 1942, 1940, 1939, 1938, 1937, 1936, 1935, 1934, 1933, 1932, 1931, 1930, 1929, 1928, 1927, 1926, 1925, 1924, 1923, 1921, 1920 |
| 818 NORTON AVE | 2013, 2008, 2004, 2003, 2000, 1999, 1996, 1995, 1992, 1991, 1990, 1986, 1981, 1980, 1976, 1975, 1971, 1970, 1969, 1966, 1965, 1964, 1963, 1962, 1961, 1958, 1957, 1956, 1954, 1952, 1950, 1949, 1948, 1947, 1946, 1945, 1944, 1942, 1940, 1939, 1938, 1937, 1936, 1935, 1934, 1933, 1932, 1931, 1930, 1929, 1928, 1927, 1926, 1925, 1924, 1923, 1921, 1920 |
| 818 NORTON AVE N | 2013, 2008, 2006, 2004, 2003, 2001, 2000, 1999, 1996, 1995, 1992, 1991, 1990, 1986, 1985, 1981, 1980, 1976, 1975, 1972, 1971, 1970, 1969, 1967, 1966, 1965, 1964, 1963, 1962, 1961, 1960, 1958, 1957, 1956, 1955, 1954, 1952, 1951, 1950, 1949, 1948, 1947, 1946, 1944, 1942, 1939, 1938, 1937, 1936, 1935, 1934, 1933, 1932, 1931, 1930, 1929, 1928, 1927, 1926, 1925, 1924, 1923, 1921, 1920 |
| 818 NORTON ST | 2013, 2008, 2006, 2004, 2003, 2001, 2000, 1999, 1996, 1995, 1992, 1991, 1990, 1986, 1985, 1981, 1980, 1976, 1972, 1971, 1970, 1969, 1967, 1966, 1965, 1964, 1963, 1962, 1961, 1960, 1958, 1957, 1956, 1955, 1954, 1952, 1951, 1950, 1949, 1948, 1947, 1946, 1945, 1944, 1942, 1940, 1939, 1938, 1937, 1936, 1935, 1934, 1933, 1932, 1931, 1930, 1929, 1928, 1927, 1926, 1925, 1924, 1923, 1921, 1920 |
| 819 FLOWER | 2013, 2008, 2006, 2004, 2003, 2001, 2000, 1999, 1996, 1995, 1992, 1991, 1990, 1986, 1985, 1981, 1980, 1976, 1975, 1972, 1971, 1970, 1969, 1967, 1966, 1965, 1964, 1963, 1962, 1961, 1960, 1958, 1957, 1956, 1955, 1954, 1952, 1951, 1950, 1949, 1948, 1947, 1946, 1945, 1944, 1942, 1939, 1938, 1936, 1934, 1933, 1932, 1931, 1930, 1929, 1928, 1927, 1926, 1925, 1924, 1923, 1921, 1920 |
| 819 PELANCON AVE | 2013, 2008, 2006, 2004, 2003, 2000, 1999, 1996, 1995, 1992, 1991, 1990, 1986, 1985, 1981, 1980, 1976, 1975, 1972, 1971, 1970, 1969, 1967, 1966, 1965, 1964, 1963, 1962, 1961, 1960, 1958, 1957, 1956, 1955, 1954, 1952, 1951, 1950, 1949, 1948, 1947, 1946, 1945, 1944, 1942, 1940, 1939, 1938, 1937, 1936, 1935, 1934, 1933, 1932, 1931, 1930, 1929, 1928, 1927, 1926, 1925, 1924, 1923, 1921, 1920 |
| 819 PELANCONI | 2013, 2008, 2006, 2004, 2003, 2001, 2000, 1999, 1996, 1995, 1992, 1991, 1990, 1986, 1985, 1981, 1980, 1976, 1975, 1972, 1971, 1970, 1969, 1966, 1965, 1964, 1963, 1961, 1960, 1958, 1957, 1956, 1955, 1954, 1952, 1951, 1950, 1949, 1948, 1947, 1946, 1945, 1944, 1942, 1940, 1939, 1938, 1937, 1936, 1935, 1934, 1933, 1932, 1931, 1930, 1929, 1928, 1927, 1926, 1925, 1924, 1923, 1921, 1920 |
| 819 PELANCONI AVE | 2013, 2008, 2004, 2003, 2001, 2000, 1999, 1996, 1995, 1992, 1990, 1986, 1981, 1980, 1976, 1971, 1970, 1969, 1966, 1965, 1964, 1963, 1962, 1961, 1957, 1956, 1954, 1952, 1950, 1949, 1948, 1947, 1946, 1945, 1944, 1942, 1940, 1939, 1938, 1937, 1936, 1935, 1934, 1933, 1932, 1931, 1930, 1929, 1928, 1927, 1926, 1925, 1924, 1923, 1921, 1920 |

# FINDINGS

| Address Researched | Address Not Identified in Research Source |
|---|---|
| 819 PELANCONI AVE N | 2013, 2008, 2006, 2004, 2003, 2001, 2000, 1999, 1996, 1995, 1992, 1991, 1990, 1986, 1985, 1981, 1980, 1976, 1975, 1972, 1971, 1970, 1969, 1967, 1966, 1965, 1964, 1963, 1962, 1961, 1960, 1958, 1957, 1956, 1955, 1954, 1952, 1951, 1950, 1949, 1948, 1947, 1946, 1944, 1942, 1939, 1938, 1937, 1936, 1935, 1934, 1933, 1932, 1931, 1930, 1929, 1928, 1927, 1926, 1925, 1924, 1923, 1921, 1920 |
| 820 FLOWER | 2013, 2008, 2006, 2004, 2003, 2001, 2000, 1999, 1996, 1995, 1992, 1991, 1990, 1986, 1985, 1981, 1980, 1976, 1975, 1972, 1971, 1970, 1969, 1967, 1966, 1965, 1964, 1963, 1962, 1961, 1960, 1958, 1957, 1956, 1955, 1954, 1952, 1951, 1950, 1949, 1948, 1947, 1946, 1945, 1944, 1942, 1939, 1938, 1937, 1936, 1934, 1933, 1932, 1931, 1930, 1929, 1928, 1927, 1926, 1925, 1924, 1923, 1921, 1920 |
| 820 FLOWER ST N | 2013, 2008, 2006, 2004, 2003, 2001, 2000, 1999, 1996, 1995, 1992, 1991, 1990, 1986, 1985, 1981, 1980, 1976, 1975, 1972, 1971, 1970, 1969, 1967, 1966, 1965, 1964, 1963, 1962, 1961, 1958, 1957, 1956, 1955, 1954, 1952, 1951, 1950, 1949, 1948, 1947, 1946, 1945, 1944, 1942, 1940, 1939, 1938, 1937, 1936, 1935, 1934, 1933, 1932, 1931, 1930, 1929, 1928, 1927, 1926, 1925, 1924, 1923, 1921, 1920 |
| 820 GRAYNOLD AVE | 2013, 2008, 2006, 2004, 2003, 2001, 2000, 1999, 1996, 1995, 1992, 1991, 1990, 1986, 1985, 1981, 1976, 1975, 1971, 1970, 1969, 1967, 1966, 1965, 1964, 1963, 1962, 1961, 1958, 1957, 1956, 1954, 1952, 1950, 1949, 1948, 1947, 1946, 1945, 1944, 1942, 1940, 1939, 1938, 1937, 1936, 1935, 1934, 1933, 1932, 1931, 1930, 1929, 1928, 1927, 1926, 1925, 1924, 1923, 1921, 1920 |
| 820 GRAYNOLD AVE N | 2013, 2008, 2006, 2004, 2003, 2001, 2000, 1999, 1996, 1995, 1992, 1991, 1990, 1986, 1985, 1981, 1980, 1976, 1975, 1972, 1971, 1970, 1969, 1967, 1966, 1965, 1964, 1963, 1962, 1961, 1960, 1958, 1957, 1956, 1955, 1954, 1952, 1951, 1950, 1949, 1948, 1947, 1946, 1944, 1942, 1940, 1939, 1938, 1937, 1936, 1935, 1934, 1933, 1932, 1931, 1930, 1929, 1928, 1927, 1926, 1925, 1924, 1923, 1921, 1920 |
| 820 NORTON AVE S | 2013, 2008, 2006, 2004, 2003, 2001, 2000, 1999, 1996, 1995, 1992, 1991, 1990, 1986, 1985, 1981, 1980, 1976, 1975, 1972, 1971, 1970, 1969, 1967, 1966, 1965, 1964, 1963, 1962, 1961, 1960, 1958, 1957, 1956, 1955, 1954, 1952, 1950, 1949, 1948, 1947, 1946, 1945, 1944, 1942, 1940, 1939, 1938, 1937, 1936, 1935, 1934, 1933, 1932, 1931, 1930, 1929, 1928, 1927, 1926, 1925, 1924, 1923, 1921, 1920 |
| 820 PELANCONI AVE | 2013, 2008, 2004, 2003, 2001, 2000, 1999, 1996, 1995, 1992, 1991, 1990, 1986, 1985, 1981, 1980, 1976, 1972, 1971, 1970, 1969, 1967, 1966, 1965, 1964, 1963, 1962, 1961, 1960, 1958, 1957, 1956, 1955, 1954, 1952, 1951, 1950, 1949, 1948, 1947, 1946, 1945, 1944, 1942, 1940, 1939, 1938, 1937, 1936, 1935, 1934, 1933, 1932, 1931, 1930, 1929, 1928, 1927, 1926, 1925, 1924, 1923, 1921, 1920 |
| 821 FLOWER | 2013, 2008, 2006, 2004, 2003, 2001, 2000, 1999, 1996, 1995, 1992, 1991, 1990, 1986, 1985, 1981, 1980, 1976, 1975, 1972, 1971, 1970, 1969, 1967, 1966, 1965, 1964, 1963, 1962, 1961, 1960, 1958, 1957, 1956, 1955, 1954, 1952, 1951, 1950, 1949, 1948, 1947, 1946, 1945, 1944, 1942, 1939, 1938, 1937, 1936, 1934, 1933, 1932, 1931, 1930, 1929, 1928, 1927, 1926, 1925, 1924, 1923, 1921, 1920 |
| 821 FLOWER ST N | 2013, 2008, 2006, 2004, 2003, 2001, 2000, 1999, 1996, 1995, 1992, 1991, 1990, 1986, 1985, 1981, 1980, 1976, 1975, 1972, 1971, 1970, 1969, 1967, 1966, 1965, 1964, 1963, 1962, 1961, 1958, 1957, 1956, 1955, 1954, 1952, 1951, 1950, 1949, 1948, 1947, 1946, 1945, 1944, 1942, 1940, 1939, 1938, 1937, 1936, 1935, 1934, 1933, 1932, 1931, 1930, 1929, 1928, 1927, 1926, 1925, 1924, 1923, 1921, 1920 |
| 821 N NORTON AVE | 2013, 2008, 2006, 2004, 2003, 2001, 2000, 1999, 1996, 1995, 1992, 1991, 1990, 1986, 1985, 1981, 1980, 1976, 1975, 1972, 1971, 1970, 1969, 1967, 1966, 1965, 1964, 1963, 1962, 1961, 1960, 1958, 1957, 1956, 1955, 1954, 1952, 1951, 1950, 1949, 1948, 1947, 1946, 1945, 1944, 1942, 1940, 1939, 1938, 1936, 1935, 1934, 1933, 1932, 1931, 1930, 1929, 1928, 1927, 1926, 1925, 1924, 1923, 1921, 1920 |
| 821 NORTON AVE S | 2013, 2008, 2006, 2004, 2003, 2001, 2000, 1999, 1996, 1995, 1992, 1991, 1990, 1986, 1985, 1981, 1980, 1976, 1975, 1972, 1971, 1970, 1969, 1967, 1966, 1965, 1964, 1963, 1962, 1961, 1960, 1958, 1957, 1956, 1955, 1954, 1952, 1950, 1949, 1948, 1947, 1946, 1945, 1944, 1942, 1940, 1939, 1938, 1937, 1936, 1935, 1934, 1933, 1932, 1931, 1930, 1929, 1928, 1927, 1926, 1925, 1924, 1923, 1921, 1920 |

# FINDINGS

| Address Researched | Address Not Identified in Research Source |
|---|---|
| 822 N NORTON AVE | 2013, 2008, 2006, 2004, 2003, 2001, 2000, 1999, 1996, 1995, 1992, 1991, 1990, 1986, 1985, 1981, 1976, 1975, 1972, 1971, 1970, 1969, 1967, 1966, 1965, 1964, 1963, 1961, 1960, 1958, 1957, 1955, 1954, 1952, 1951, 1949, 1948, 1947, 1946, 1945, 1944, 1942, 1940, 1939, 1938, 1937, 1936, 1935, 1934, 1933, 1932, 1931, 1930, 1929, 1928, 1927, 1926, 1925, 1924, 1923, 1921, 1920 |
| 822 NORTON AVE | 2013, 2008, 2004, 2003, 2000, 1999, 1996, 1992, 1990, 1981, 1980, 1976, 1975, 1971, 1970, 1969, 1966, 1965, 1964, 1963, 1962, 1961, 1958, 1957, 1956, 1954, 1952, 1950, 1949, 1948, 1947, 1946, 1945, 1944, 1942, 1940, 1939, 1938, 1937, 1936, 1935, 1934, 1933, 1932, 1931, 1930, 1929, 1928, 1927, 1926, 1925, 1924, 1923, 1921, 1920 |
| 822 NORTON AVE N | 2013, 2008, 2006, 2004, 2003, 2001, 2000, 1999, 1996, 1995, 1992, 1991, 1990, 1986, 1985, 1981, 1980, 1976, 1975, 1972, 1971, 1970, 1969, 1967, 1966, 1965, 1964, 1963, 1962, 1961, 1960, 1958, 1957, 1956, 1955, 1954, 1952, 1951, 1950, 1949, 1948, 1947, 1946, 1944, 1942, 1939, 1938, 1937, 1936, 1935, 1934, 1933, 1932, 1931, 1930, 1929, 1928, 1927, 1926, 1925, 1924, 1923, 1921, 1920 |
| 822 NORTON AVE S | 2013, 2008, 2006, 2004, 2003, 2001, 2000, 1999, 1996, 1995, 1992, 1991, 1990, 1986, 1985, 1981, 1980, 1976, 1975, 1972, 1971, 1970, 1969, 1967, 1966, 1965, 1964, 1963, 1962, 1961, 1960, 1958, 1957, 1956, 1955, 1954, 1952, 1950, 1949, 1948, 1947, 1946, 1945, 1944, 1942, 1940, 1939, 1938, 1937, 1936, 1935, 1934, 1933, 1932, 1931, 1930, 1929, 1928, 1927, 1926, 1925, 1924, 1923, 1921, 1920 |
| 822 NORTON ST | 2013, 2008, 2006, 2004, 2003, 2001, 2000, 1999, 1996, 1995, 1992, 1991, 1990, 1986, 1985, 1981, 1980, 1976, 1972, 1971, 1970, 1969, 1967, 1966, 1965, 1964, 1963, 1962, 1961, 1960, 1958, 1957, 1956, 1955, 1954, 1952, 1951, 1950, 1949, 1948, 1947, 1946, 1945, 1944, 1942, 1940, 1939, 1938, 1937, 1936, 1935, 1934, 1933, 1932, 1931, 1930, 1929, 1928, 1927, 1926, 1925, 1924, 1923, 1921, 1920 |
| 823 GRAYNOLD AVE | 2013, 2008, 2006, 2004, 2003, 2001, 2000, 1999, 1996, 1995, 1992, 1991, 1990, 1986, 1985, 1981, 1980, 1976, 1975, 1971, 1970, 1969, 1967, 1966, 1965, 1964, 1963, 1962, 1961, 1958, 1957, 1956, 1954, 1952, 1950, 1949, 1948, 1947, 1946, 1945, 1944, 1942, 1939, 1938, 1937, 1936, 1935, 1934, 1933, 1932, 1931, 1930, 1929, 1928, 1927, 1926, 1925, 1924, 1923, 1921, 1920 |
| 823 GRAYNOLD AVE N | 2013, 2008, 2006, 2004, 2003, 2001, 2000, 1999, 1996, 1995, 1992, 1991, 1990, 1986, 1985, 1981, 1980, 1976, 1975, 1972, 1971, 1970, 1969, 1967, 1966, 1965, 1964, 1963, 1962, 1961, 1960, 1958, 1957, 1956, 1955, 1954, 1952, 1951, 1950, 1949, 1948, 1947, 1946, 1944, 1942, 1940, 1939, 1938, 1937, 1936, 1935, 1934, 1933, 1932, 1931, 1930, 1929, 1928, 1927, 1926, 1925, 1924, 1923, 1921, 1920 |
| 823 N NORTON AVE | 2013, 2008, 2006, 2004, 2003, 2001, 2000, 1999, 1996, 1995, 1992, 1991, 1990, 1986, 1985, 1981, 1976, 1975, 1972, 1971, 1969, 1967, 1966, 1965, 1964, 1963, 1961, 1960, 1958, 1957, 1955, 1954, 1952, 1951, 1949, 1948, 1947, 1946, 1945, 1944, 1942, 1940, 1939, 1938, 1937, 1936, 1935, 1934, 1933, 1932, 1931, 1930, 1929, 1928, 1927, 1926, 1925, 1924, 1923, 1921, 1920 |
| 823 NORTON AVE | 2013, 2008, 2004, 2003, 2000, 1999, 1996, 1992, 1990, 1986, 1981, 1980, 1976, 1975, 1971, 1970, 1969, 1966, 1965, 1964, 1963, 1962, 1961, 1958, 1957, 1956, 1954, 1952, 1950, 1949, 1948, 1947, 1946, 1945, 1944, 1942, 1940, 1939, 1938, 1937, 1936, 1935, 1934, 1933, 1932, 1931, 1930, 1929, 1928, 1927, 1926, 1925, 1924, 1923, 1921, 1920 |
| 823 NORTON AVE N | 2013, 2008, 2006, 2004, 2003, 2001, 2000, 1999, 1996, 1995, 1992, 1991, 1990, 1986, 1985, 1981, 1980, 1976, 1975, 1972, 1971, 1970, 1969, 1967, 1966, 1965, 1964, 1963, 1962, 1961, 1960, 1958, 1957, 1956, 1955, 1954, 1952, 1951, 1950, 1949, 1948, 1947, 1946, 1944, 1942, 1940, 1939, 1938, 1937, 1936, 1935, 1934, 1933, 1932, 1931, 1930, 1929, 1928, 1927, 1926, 1925, 1924, 1923, 1921, 1920 |
| 823 NORTON ST | 2013, 2008, 2006, 2004, 2003, 2001, 2000, 1999, 1996, 1995, 1992, 1991, 1990, 1986, 1985, 1981, 1980, 1976, 1972, 1971, 1970, 1969, 1967, 1966, 1965, 1964, 1963, 1962, 1961, 1960, 1958, 1957, 1956, 1955, 1954, 1952, 1951, 1950, 1949, 1948, 1947, 1946, 1945, 1944, 1942, 1940, 1939, 1938, 1937, 1936, 1935, 1934, 1933, 1932, 1931, 1930, 1929, 1928, 1927, 1926, 1925, 1924, 1923, 1921, 1920 |

# FINDINGS

| Address Researched | Address Not Identified in Research Source |
|---|---|
| 823 PELANCONI AVE | 2013, 2008, 2004, 2003, 2001, 2000, 1999, 1996, 1992, 1990, 1986, 1981, 1980, 1976, 1972, 1970, 1969, 1967, 1966, 1965, 1964, 1963, 1962, 1961, 1960, 1957, 1956, 1955, 1954, 1952, 1951, 1950, 1949, 1948, 1947, 1946, 1945, 1944, 1942, 1940, 1939, 1938, 1937, 1936, 1935, 1934, 1933, 1932, 1931, 1930, 1929, 1928, 1927, 1926, 1925, 1924, 1923, 1921, 1920 |
| 824 AIR WAY | 2013, 2008, 2006, 2004, 2003, 2000, 1999, 1996, 1995, 1992, 1991, 1990, 1986, 1985, 1981, 1980, 1976, 1975, 1972, 1971, 1970, 1969, 1966, 1965, 1964, 1963, 1962, 1961, 1960, 1958, 1957, 1956, 1955, 1954, 1952, 1951, 1950, 1949, 1948, 1947, 1946, 1945, 1944, 1942, 1940, 1939, 1938, 1937, 1936, 1935, 1934, 1933, 1932, 1931, 1930, 1929, 1928, 1927, 1926, 1925, 1924, 1923, 1921, 1920 |
| 824 NORTON AVE S | 2013, 2008, 2006, 2004, 2003, 2001, 2000, 1999, 1996, 1995, 1992, 1991, 1990, 1986, 1985, 1981, 1980, 1976, 1975, 1972, 1971, 1970, 1969, 1967, 1966, 1965, 1964, 1963, 1962, 1961, 1960, 1958, 1957, 1956, 1955, 1954, 1952, 1950, 1949, 1948, 1947, 1946, 1945, 1944, 1942, 1940, 1939, 1938, 1937, 1936, 1935, 1934, 1933, 1932, 1931, 1930, 1929, 1928, 1927, 1926, 1925, 1924, 1923, 1921, 1920 |
| 825 FLOWER ST S | 2013, 2008, 2006, 2004, 2003, 2001, 2000, 1999, 1996, 1995, 1992, 1991, 1990, 1986, 1985, 1981, 1980, 1976, 1975, 1972, 1971, 1969, 1967, 1966, 1965, 1964, 1963, 1962, 1961, 1960, 1958, 1957, 1956, 1955, 1954, 1952, 1951, 1950, 1949, 1948, 1947, 1946, 1945, 1944, 1942, 1940, 1939, 1938, 1937, 1936, 1935, 1934, 1933, 1932, 1931, 1930, 1929, 1928, 1927, 1926, 1925, 1924, 1923, 1921, 1920 |
| 825 GRAYNOLD AVE | 2013, 2008, 2006, 2004, 2003, 2001, 2000, 1999, 1996, 1995, 1992, 1991, 1990, 1986, 1985, 1981, 1980, 1976, 1975, 1971, 1970, 1969, 1967, 1966, 1965, 1964, 1963, 1962, 1961, 1958, 1957, 1956, 1954, 1952, 1950, 1949, 1948, 1947, 1946, 1945, 1944, 1942, 1939, 1938, 1937, 1936, 1935, 1934, 1933, 1932, 1931, 1930, 1929, 1928, 1927, 1926, 1925, 1924, 1923, 1921, 1920 |
| 825 GRAYNOLD AVE N | 2013, 2008, 2006, 2004, 2003, 2001, 2000, 1999, 1996, 1995, 1992, 1991, 1990, 1986, 1985, 1981, 1980, 1976, 1975, 1972, 1971, 1970, 1969, 1967, 1966, 1965, 1964, 1963, 1962, 1961, 1960, 1958, 1957, 1956, 1955, 1954, 1952, 1951, 1950, 1949, 1948, 1947, 1946, 1944, 1942, 1940, 1939, 1938, 1937, 1936, 1935, 1934, 1933, 1932, 1931, 1930, 1929, 1928, 1927, 1926, 1925, 1924, 1923, 1921, 1920 |
| 825 N NORTON AVE | 2013, 2008, 2006, 2004, 2003, 2001, 2000, 1999, 1996, 1995, 1992, 1991, 1990, 1986, 1985, 1981, 1976, 1975, 1972, 1971, 1969, 1967, 1966, 1965, 1964, 1963, 1961, 1960, 1958, 1957, 1955, 1954, 1952, 1951, 1949, 1948, 1947, 1946, 1945, 1944, 1942, 1940, 1939, 1938, 1937, 1936, 1935, 1934, 1933, 1932, 1931, 1930, 1929, 1928, 1927, 1926, 1925, 1924, 1923, 1921, 1920 |
| 825 NORTON AVE | 2013, 2008, 2004, 2003, 2000, 1999, 1996, 1995, 1992, 1990, 1986, 1981, 1980, 1976, 1975, 1971, 1970, 1969, 1966, 1965, 1964, 1963, 1962, 1961, 1958, 1957, 1956, 1954, 1952, 1950, 1949, 1948, 1947, 1946, 1945, 1944, 1942, 1940, 1939, 1938, 1937, 1936, 1935, 1934, 1933, 1932, 1931, 1930, 1929, 1928, 1927, 1926, 1925, 1924, 1923, 1921, 1920 |
| 825 NORTON AVE N | 2013, 2008, 2006, 2004, 2003, 2001, 2000, 1999, 1996, 1995, 1992, 1991, 1990, 1986, 1985, 1981, 1980, 1976, 1975, 1972, 1971, 1970, 1969, 1967, 1966, 1965, 1964, 1963, 1962, 1961, 1960, 1958, 1957, 1956, 1955, 1954, 1952, 1951, 1950, 1949, 1948, 1947, 1946, 1944, 1942, 1940, 1939, 1938, 1937, 1936, 1935, 1934, 1933, 1932, 1931, 1930, 1929, 1928, 1927, 1926, 1925, 1924, 1923, 1921, 1920 |
| 825 NORTON ST | 2013, 2008, 2006, 2004, 2003, 2001, 2000, 1999, 1996, 1995, 1992, 1991, 1990, 1986, 1985, 1981, 1980, 1976, 1972, 1971, 1970, 1969, 1967, 1966, 1965, 1964, 1963, 1962, 1961, 1960, 1958, 1957, 1956, 1955, 1954, 1952, 1951, 1950, 1949, 1948, 1947, 1946, 1945, 1944, 1942, 1940, 1939, 1938, 1937, 1936, 1935, 1934, 1933, 1932, 1931, 1930, 1929, 1928, 1927, 1926, 1925, 1924, 1923, 1921, 1920 |
| 826 FLOWER | 2013, 2008, 2006, 2004, 2003, 2001, 2000, 1999, 1996, 1995, 1992, 1991, 1990, 1986, 1985, 1981, 1980, 1976, 1975, 1972, 1971, 1970, 1969, 1967, 1966, 1965, 1964, 1963, 1962, 1961, 1960, 1958, 1957, 1956, 1955, 1954, 1952, 1951, 1950, 1949, 1948, 1947, 1946, 1945, 1944, 1942, 1939, 1938, 1937, 1936, 1934, 1933, 1932, 1931, 1930, 1929, 1928, 1927, 1926, 1925, 1924, 1923, 1921, 1920 |

# FINDINGS

| Address Researched | Address Not Identified in Research Source |
|---|---|
| 826 FLOWER ST N | 2013, 2008, 2006, 2004, 2003, 2001, 2000, 1999, 1996, 1995, 1992, 1991, 1990, 1986, 1985, 1981, 1980, 1976, 1975, 1972, 1971, 1970, 1969, 1967, 1966, 1965, 1964, 1963, 1962, 1961, 1958, 1957, 1956, 1955, 1954, 1952, 1951, 1950, 1949, 1948, 1947, 1946, 1945, 1944, 1942, 1940, 1939, 1938, 1937, 1936, 1935, 1934, 1933, 1932, 1931, 1930, 1929, 1928, 1927, 1926, 1925, 1924, 1923, 1921, 1920 |
| 826 N NORTON AVE | 2013, 2008, 2006, 2004, 2003, 2001, 2000, 1999, 1996, 1995, 1992, 1991, 1990, 1986, 1985, 1981, 1976, 1975, 1972, 1971, 1969, 1967, 1966, 1965, 1964, 1963, 1961, 1960, 1958, 1957, 1955, 1954, 1952, 1951, 1950, 1949, 1948, 1947, 1946, 1945, 1944, 1942, 1940, 1939, 1938, 1937, 1936, 1935, 1934, 1933, 1932, 1931, 1930, 1929, 1928, 1927, 1926, 1925, 1924, 1923, 1921, 1920 |
| 826 NORTON | 2013, 2008, 2006, 2004, 2003, 2001, 2000, 1999, 1996, 1995, 1992, 1991, 1990, 1986, 1985, 1981, 1980, 1976, 1975, 1972, 1970, 1969, 1966, 1965, 1964, 1963, 1961, 1960, 1957, 1956, 1955, 1954, 1952, 1951, 1950, 1949, 1948, 1947, 1946, 1945, 1944, 1942, 1940, 1939, 1938, 1937, 1936, 1935, 1934, 1933, 1932, 1931, 1930, 1929, 1928, 1927, 1926, 1925, 1924, 1923, 1921, 1920 |
| 826 NORTON AVE | 2013, 2008, 2004, 2003, 2001, 2000, 1999, 1996, 1992, 1991, 1990, 1986, 1980, 1976, 1975, 1970, 1969, 1966, 1965, 1964, 1963, 1962, 1961, 1958, 1957, 1956, 1954, 1952, 1950, 1949, 1948, 1947, 1946, 1945, 1944, 1940, 1939, 1938, 1937, 1936, 1935, 1934, 1933, 1932, 1931, 1930, 1929, 1928, 1927, 1926, 1925, 1924, 1923, 1921, 1920 |
| 826 NORTON AVE | 2013, 2006, 2004, 2003, 2001, 2000, 1999, 1996, 1995, 1992, 1991, 1990, 1986, 1985, 1981, 1980, 1976, 1975, 1972, 1971, 1970, 1969, 1967, 1966, 1965, 1964, 1963, 1962, 1961, 1960, 1958, 1957, 1956, 1955, 1954, 1952, 1951, 1950, 1949, 1948, 1947, 1946, 1945, 1944, 1942, 1940, 1939, 1938, 1937, 1936, 1935, 1934, 1933, 1932, 1931, 1930, 1929, 1928, 1927, 1926, 1925, 1924, 1923, 1921, 1920 |
| 826 NORTON AVE N | 2013, 2008, 2006, 2004, 2003, 2001, 2000, 1999, 1996, 1995, 1992, 1991, 1990, 1986, 1985, 1981, 1980, 1976, 1975, 1972, 1971, 1970, 1969, 1967, 1966, 1965, 1964, 1963, 1962, 1961, 1960, 1958, 1957, 1956, 1955, 1954, 1952, 1951, 1950, 1949, 1948, 1947, 1946, 1944, 1942, 1939, 1938, 1937, 1936, 1935, 1934, 1933, 1932, 1931, 1930, 1929, 1928, 1927, 1926, 1925, 1924, 1923, 1921, 1920 |
| 826 NORTON AVE S | 2013, 2008, 2006, 2004, 2003, 2001, 2000, 1999, 1996, 1995, 1992, 1991, 1990, 1986, 1985, 1981, 1980, 1976, 1975, 1972, 1971, 1970, 1969, 1967, 1966, 1965, 1964, 1963, 1962, 1961, 1960, 1958, 1957, 1956, 1955, 1954, 1952, 1950, 1949, 1948, 1947, 1946, 1945, 1944, 1942, 1940, 1939, 1938, 1937, 1936, 1935, 1934, 1933, 1932, 1931, 1930, 1929, 1928, 1927, 1926, 1925, 1924, 1923, 1921, 1920 |
| 826 NORTON ST | 2013, 2008, 2006, 2004, 2003, 2001, 2000, 1999, 1996, 1995, 1992, 1991, 1990, 1986, 1985, 1981, 1980, 1976, 1972, 1971, 1970, 1969, 1967, 1966, 1965, 1964, 1963, 1962, 1961, 1960, 1958, 1957, 1956, 1955, 1954, 1952, 1951, 1950, 1949, 1948, 1947, 1946, 1945, 1944, 1942, 1940, 1939, 1938, 1937, 1936, 1935, 1934, 1933, 1932, 1931, 1930, 1929, 1928, 1927, 1926, 1925, 1924, 1923, 1921, 1920 |
| 827 FLOWER | 2013, 2008, 2006, 2004, 2003, 2001, 2000, 1999, 1996, 1995, 1992, 1991, 1990, 1986, 1985, 1981, 1980, 1976, 1975, 1972, 1971, 1970, 1969, 1967, 1966, 1965, 1964, 1963, 1962, 1961, 1960, 1958, 1957, 1956, 1955, 1954, 1952, 1951, 1950, 1949, 1948, 1947, 1946, 1945, 1944, 1942, 1939, 1938, 1937, 1936, 1934, 1933, 1932, 1931, 1930, 1929, 1928, 1927, 1926, 1925, 1924, 1923, 1921, 1920 |
| 827 FLOWER ST N | 2013, 2008, 2006, 2004, 2003, 2001, 2000, 1999, 1996, 1995, 1992, 1991, 1990, 1986, 1985, 1981, 1980, 1976, 1975, 1972, 1971, 1970, 1969, 1967, 1966, 1965, 1964, 1963, 1962, 1961, 1958, 1957, 1956, 1955, 1954, 1952, 1951, 1950, 1949, 1948, 1947, 1946, 1945, 1944, 1942, 1940, 1939, 1938, 1937, 1936, 1935, 1934, 1933, 1932, 1931, 1930, 1929, 1928, 1927, 1926, 1925, 1924, 1923, 1921, 1920 |
| 827 N NORTON AVE | 2013, 2008, 2006, 2004, 2003, 2001, 2000, 1999, 1996, 1995, 1992, 1991, 1990, 1986, 1985, 1981, 1976, 1975, 1972, 1971, 1969, 1967, 1966, 1965, 1964, 1963, 1961, 1960, 1958, 1957, 1955, 1954, 1952, 1951, 1949, 1948, 1947, 1946, 1945, 1944, 1942, 1940, 1939, 1938, 1937, 1936, 1935, 1934, 1933, 1932, 1931, 1930, 1929, 1928, 1927, 1926, 1925, 1924, 1923, 1921, 1920 |

# FINDINGS

| Address Researched | Address Not Identified in Research Source |
|---|---|
| 827 NORTON AVE | 2013, 2008, 2006, 2004, 2003, 2001, 2000, 1999, 1996, 1995, 1992, 1991, 1990, 1986, 1981, 1980, 1976, 1975, 1971, 1970, 1969, 1966, 1965, 1964, 1963, 1962, 1961, 1958, 1957, 1956, 1954, 1952, 1950, 1949, 1948, 1947, 1946, 1945, 1944, 1942, 1940, 1939, 1938, 1937, 1936, 1935, 1934, 1933, 1932, 1931, 1930, 1929, 1928, 1927, 1926, 1925, 1924, 1923, 1921, 1920 |
| 827 NORTON AVE N | 2013, 2008, 2006, 2004, 2003, 2001, 2000, 1999, 1996, 1995, 1992, 1991, 1990, 1986, 1985, 1981, 1980, 1976, 1975, 1972, 1971, 1970, 1969, 1967, 1966, 1965, 1964, 1963, 1962, 1961, 1960, 1958, 1957, 1956, 1955, 1954, 1952, 1951, 1950, 1949, 1948, 1947, 1946, 1944, 1942, 1939, 1938, 1937, 1936, 1935, 1934, 1933, 1932, 1931, 1930, 1929, 1928, 1927, 1926, 1925, 1924, 1923, 1921, 1920 |
| 827 NORTON AVE S | 2013, 2008, 2006, 2004, 2003, 2001, 2000, 1999, 1996, 1995, 1992, 1991, 1990, 1986, 1985, 1981, 1980, 1976, 1975, 1972, 1971, 1970, 1969, 1967, 1966, 1965, 1964, 1963, 1962, 1961, 1960, 1958, 1957, 1956, 1955, 1954, 1952, 1950, 1949, 1948, 1947, 1946, 1945, 1944, 1942, 1940, 1939, 1938, 1937, 1936, 1935, 1934, 1933, 1932, 1931, 1930, 1929, 1928, 1927, 1926, 1925, 1924, 1923, 1921, 1920 |
| 827 NORTON ST | 2013, 2008, 2006, 2004, 2003, 2001, 2000, 1999, 1996, 1995, 1992, 1991, 1990, 1986, 1985, 1981, 1980, 1976, 1972, 1971, 1970, 1969, 1967, 1966, 1965, 1964, 1963, 1962, 1961, 1960, 1958, 1957, 1956, 1955, 1954, 1952, 1951, 1950, 1949, 1948, 1947, 1946, 1945, 1944, 1942, 1940, 1939, 1938, 1937, 1936, 1935, 1934, 1933, 1932, 1931, 1930, 1929, 1928, 1927, 1926, 1925, 1924, 1923, 1921, 1920 |
| 829 FLOWER | 2013, 2008, 2006, 2004, 2003, 2001, 2000, 1999, 1996, 1995, 1992, 1991, 1990, 1986, 1985, 1981, 1980, 1976, 1975, 1972, 1971, 1970, 1969, 1967, 1966, 1965, 1964, 1963, 1962, 1961, 1960, 1958, 1957, 1956, 1955, 1954, 1952, 1951, 1950, 1949, 1948, 1947, 1946, 1945, 1944, 1942, 1939, 1938, 1937, 1936, 1934, 1933, 1932, 1931, 1930, 1929, 1928, 1927, 1926, 1925, 1924, 1923, 1921, 1920 |
| 829 NORTON AVE S | 2013, 2008, 2006, 2004, 2003, 2001, 2000, 1999, 1996, 1995, 1992, 1991, 1990, 1986, 1985, 1981, 1980, 1976, 1975, 1972, 1971, 1970, 1969, 1967, 1966, 1965, 1964, 1963, 1962, 1961, 1960, 1958, 1957, 1956, 1955, 1954, 1952, 1950, 1949, 1948, 1947, 1946, 1945, 1944, 1942, 1940, 1939, 1938, 1937, 1936, 1935, 1934, 1933, 1932, 1931, 1930, 1929, 1928, 1927, 1926, 1925, 1924, 1923, 1921, 1920 |
| 830 FLOWER | 2013, 2008, 2006, 2004, 2003, 2001, 2000, 1999, 1996, 1995, 1992, 1991, 1990, 1986, 1985, 1981, 1980, 1976, 1975, 1972, 1971, 1970, 1969, 1967, 1966, 1965, 1964, 1963, 1962, 1961, 1960, 1958, 1957, 1956, 1955, 1954, 1952, 1951, 1950, 1949, 1948, 1947, 1946, 1945, 1944, 1942, 1939, 1938, 1937, 1936, 1934, 1933, 1932, 1931, 1930, 1929, 1928, 1927, 1926, 1925, 1923, 1921, 1920 |
| 830 FLOWER ST N | 2013, 2008, 2006, 2004, 2003, 2001, 2000, 1999, 1996, 1995, 1992, 1991, 1990, 1986, 1985, 1981, 1980, 1976, 1975, 1972, 1971, 1970, 1969, 1967, 1966, 1965, 1964, 1963, 1962, 1961, 1958, 1957, 1956, 1955, 1954, 1952, 1951, 1950, 1949, 1948, 1947, 1946, 1945, 1944, 1942, 1940, 1939, 1938, 1937, 1936, 1935, 1934, 1933, 1932, 1931, 1930, 1929, 1928, 1927, 1926, 1925, 1924, 1923, 1921, 1920 |
| 830 N NORTON AVE | 2013, 2008, 2006, 2004, 2003, 2001, 2000, 1999, 1996, 1995, 1992, 1991, 1990, 1986, 1985, 1981, 1980, 1976, 1975, 1972, 1971, 1969, 1967, 1966, 1965, 1964, 1963, 1961, 1960, 1958, 1957, 1955, 1954, 1952, 1951, 1949, 1948, 1947, 1946, 1945, 1944, 1942, 1940, 1939, 1938, 1937, 1936, 1935, 1934, 1933, 1932, 1931, 1930, 1929, 1928, 1927, 1926, 1925, 1924, 1923, 1921, 1920 |
| 830 NORTON AVE | 2013, 2008, 2004, 2003, 2000, 1999, 1996, 1995, 1992, 1990, 1986, 1985, 1981, 1980, 1976, 1975, 1971, 1970, 1969, 1966, 1965, 1964, 1963, 1962, 1961, 1958, 1957, 1956, 1954, 1952, 1950, 1949, 1948, 1947, 1946, 1945, 1944, 1942, 1940, 1939, 1938, 1937, 1936, 1935, 1934, 1933, 1932, 1931, 1930, 1929, 1928, 1927, 1926, 1925, 1924, 1923, 1921, 1920 |
| 830 NORTON AVE N | 2013, 2008, 2006, 2004, 2003, 2001, 2000, 1999, 1996, 1995, 1992, 1991, 1990, 1986, 1985, 1981, 1980, 1976, 1975, 1972, 1971, 1970, 1969, 1967, 1966, 1965, 1964, 1963, 1962, 1961, 1960, 1958, 1957, 1956, 1955, 1954, 1952, 1951, 1950, 1949, 1948, 1947, 1946, 1944, 1942, 1939, 1938, 1937, 1936, 1935, 1934, 1933, 1932, 1931, 1930, 1929, 1928, 1927, 1926, 1925, 1924, 1923, 1921, 1920 |

# FINDINGS

| Address Researched | Address Not Identified in Research Source |
|---|---|
| 830 NORTON AVE S | 2013, 2008, 2006, 2004, 2003, 2001, 2000, 1999, 1996, 1995, 1992, 1991, 1990, 1986, 1985, 1981, 1980, 1976, 1975, 1972, 1971, 1970, 1969, 1967, 1966, 1965, 1964, 1963, 1962, 1961, 1960, 1958, 1957, 1956, 1955, 1954, 1952, 1950, 1949, 1948, 1947, 1946, 1945, 1944, 1942, 1940, 1939, 1938, 1937, 1936, 1935, 1934, 1933, 1932, 1931, 1930, 1929, 1928, 1927, 1926, 1925, 1924, 1923, 1921, 1920 |
| 830 NORTON ST | 2013, 2008, 2006, 2004, 2003, 2001, 2000, 1999, 1996, 1995, 1992, 1991, 1990, 1986, 1985, 1981, 1980, 1976, 1972, 1971, 1970, 1969, 1967, 1966, 1965, 1964, 1963, 1962, 1961, 1960, 1958, 1957, 1956, 1955, 1954, 1952, 1951, 1950, 1949, 1948, 1947, 1946, 1945, 1944, 1942, 1940, 1939, 1938, 1937, 1936, 1935, 1934, 1933, 1932, 1931, 1930, 1929, 1928, 1927, 1926, 1925, 1924, 1923, 1921, 1920 |
| 831 N NORTON AVE | 2013, 2008, 2006, 2004, 2003, 2001, 2000, 1999, 1996, 1995, 1992, 1991, 1990, 1986, 1985, 1981, 1976, 1975, 1972, 1971, 1970, 1969, 1967, 1966, 1965, 1964, 1963, 1961, 1960, 1958, 1957, 1955, 1954, 1952, 1951, 1949, 1948, 1947, 1946, 1945, 1944, 1942, 1940, 1939, 1938, 1937, 1936, 1935, 1934, 1933, 1932, 1931, 1930, 1929, 1928, 1927, 1926, 1925, 1924, 1923, 1921, 1920 |
| 831 NORTON AVE | 2013, 2008, 2004, 2003, 2000, 1999, 1996, 1995, 1992, 1990, 1986, 1981, 1980, 1976, 1975, 1971, 1970, 1969, 1966, 1965, 1964, 1963, 1962, 1961, 1958, 1957, 1956, 1954, 1952, 1950, 1949, 1948, 1947, 1946, 1945, 1944, 1942, 1940, 1939, 1938, 1937, 1936, 1935, 1934, 1933, 1932, 1931, 1930, 1929, 1928, 1927, 1926, 1925, 1924, 1923, 1921, 1920 |
| 831 NORTON AVE N | 2013, 2008, 2006, 2004, 2003, 2001, 2000, 1999, 1996, 1995, 1992, 1991, 1990, 1986, 1985, 1981, 1980, 1976, 1975, 1972, 1971, 1970, 1969, 1967, 1966, 1965, 1964, 1963, 1962, 1961, 1960, 1958, 1957, 1956, 1955, 1954, 1952, 1951, 1950, 1949, 1948, 1947, 1946, 1944, 1942, 1939, 1938, 1937, 1936, 1935, 1934, 1933, 1932, 1931, 1930, 1929, 1928, 1927, 1926, 1925, 1924, 1923, 1921, 1920 |
| 831 NORTON AVE S | 2013, 2008, 2006, 2004, 2003, 2001, 2000, 1999, 1996, 1995, 1992, 1991, 1990, 1986, 1985, 1981, 1980, 1976, 1975, 1972, 1971, 1970, 1969, 1967, 1966, 1965, 1964, 1963, 1962, 1961, 1960, 1958, 1957, 1956, 1955, 1954, 1952, 1950, 1949, 1948, 1947, 1946, 1945, 1944, 1942, 1940, 1939, 1938, 1937, 1936, 1935, 1934, 1933, 1932, 1931, 1930, 1929, 1928, 1927, 1926, 1925, 1924, 1923, 1921, 1920 |
| 831 NORTON ST | 2013, 2008, 2006, 2004, 2003, 2001, 2000, 1999, 1996, 1995, 1992, 1991, 1990, 1986, 1985, 1981, 1980, 1976, 1972, 1971, 1970, 1969, 1967, 1966, 1965, 1964, 1963, 1962, 1961, 1960, 1958, 1957, 1956, 1955, 1954, 1952, 1951, 1950, 1949, 1948, 1947, 1946, 1945, 1944, 1942, 1940, 1939, 1938, 1937, 1936, 1935, 1934, 1933, 1932, 1931, 1930, 1929, 1928, 1927, 1926, 1925, 1924, 1923, 1921, 1920 |
| 832 FLOWER | 2013, 2008, 2006, 2004, 2003, 2001, 2000, 1999, 1996, 1995, 1992, 1991, 1990, 1986, 1985, 1981, 1980, 1976, 1975, 1972, 1971, 1970, 1969, 1967, 1966, 1965, 1964, 1963, 1962, 1961, 1960, 1958, 1957, 1956, 1955, 1954, 1952, 1951, 1950, 1949, 1948, 1947, 1946, 1945, 1944, 1942, 1939, 1938, 1937, 1936, 1934, 1933, 1932, 1931, 1930, 1929, 1928, 1927, 1926, 1925, 1924, 1923, 1921, 1920 |
| 832 FLOWER ST N | 2013, 2008, 2006, 2004, 2003, 2001, 2000, 1999, 1996, 1995, 1992, 1991, 1990, 1986, 1985, 1981, 1980, 1976, 1975, 1972, 1971, 1970, 1969, 1967, 1966, 1965, 1964, 1963, 1962, 1961, 1958, 1957, 1956, 1955, 1954, 1952, 1951, 1950, 1949, 1948, 1947, 1946, 1945, 1944, 1942, 1940, 1939, 1938, 1937, 1936, 1935, 1934, 1933, 1932, 1931, 1930, 1929, 1928, 1927, 1926, 1925, 1924, 1923, 1921, 1920 |
| 832 NORTON AVE S | 2013, 2008, 2006, 2004, 2003, 2001, 2000, 1999, 1996, 1995, 1992, 1991, 1990, 1986, 1985, 1981, 1980, 1976, 1975, 1972, 1971, 1970, 1969, 1967, 1966, 1965, 1964, 1963, 1962, 1961, 1960, 1958, 1957, 1956, 1955, 1954, 1952, 1950, 1949, 1948, 1947, 1946, 1945, 1944, 1942, 1940, 1939, 1938, 1937, 1936, 1935, 1934, 1933, 1932, 1931, 1930, 1929, 1928, 1927, 1926, 1925, 1924, 1923, 1921, 1920 |
| 833 FLOWER | 2013, 2008, 2006, 2004, 2003, 2001, 2000, 1999, 1996, 1995, 1992, 1991, 1990, 1986, 1985, 1981, 1980, 1976, 1975, 1972, 1971, 1970, 1969, 1967, 1966, 1965, 1964, 1963, 1962, 1961, 1960, 1958, 1957, 1956, 1955, 1954, 1952, 1951, 1950, 1949, 1948, 1947, 1946, 1945, 1944, 1942, 1940, 1939, 1938, 1936, 1935, 1934, 1933, 1932, 1931, 1930, 1928, 1927, 1926, 1925, 1924, 1923, 1921, 1920 |

# FINDINGS

| Address Researched | Address Not Identified in Research Source |
|---|---|
| 834 N NORTON AVE | 2013, 2008, 2006, 2004, 2003, 2001, 2000, 1999, 1996, 1995, 1992, 1991, 1990, 1986, 1985, 1981, 1976, 1975, 1972, 1971, 1970, 1969, 1967, 1966, 1965, 1964, 1963, 1961, 1960, 1958, 1957, 1955, 1954, 1952, 1951, 1949, 1948, 1947, 1946, 1945, 1944, 1942, 1940, 1939, 1938, 1937, 1936, 1935, 1934, 1933, 1932, 1931, 1930, 1929, 1928, 1927, 1926, 1925, 1924, 1923, 1921, 1920 |
| 834 NORTON AVE | 2013, 2008, 2004, 2003, 2000, 1999, 1996, 1992, 1990, 1986, 1981, 1980, 1976, 1975, 1971, 1970, 1969, 1966, 1965, 1964, 1963, 1962, 1961, 1958, 1957, 1956, 1954, 1952, 1950, 1949, 1948, 1947, 1946, 1945, 1944, 1942, 1940, 1939, 1938, 1937, 1936, 1935, 1934, 1933, 1932, 1931, 1930, 1929, 1928, 1927, 1926, 1925, 1924, 1923, 1921, 1920 |
| 834 NORTON AVE N | 2013, 2008, 2006, 2004, 2003, 2001, 2000, 1999, 1996, 1995, 1992, 1991, 1990, 1986, 1985, 1981, 1980, 1976, 1975, 1972, 1971, 1970, 1969, 1967, 1966, 1965, 1964, 1963, 1962, 1961, 1960, 1958, 1957, 1956, 1955, 1954, 1952, 1951, 1950, 1949, 1948, 1947, 1946, 1944, 1942, 1939, 1938, 1937, 1936, 1935, 1934, 1933, 1932, 1931, 1930, 1929, 1928, 1927, 1926, 1925, 1924, 1923, 1921, 1920 |
| 834 NORTON ST | 2013, 2008, 2006, 2004, 2003, 2001, 2000, 1999, 1996, 1995, 1992, 1991, 1990, 1986, 1985, 1981, 1980, 1976, 1972, 1971, 1970, 1969, 1967, 1966, 1965, 1964, 1963, 1962, 1961, 1960, 1958, 1957, 1956, 1955, 1954, 1952, 1951, 1950, 1949, 1948, 1947, 1946, 1945, 1944, 1942, 1940, 1939, 1938, 1937, 1936, 1935, 1934, 1933, 1932, 1931, 1930, 1929, 1928, 1927, 1926, 1925, 1924, 1923, 1921, 1920 |
| 835 N NORTON AVE | 2013, 2008, 2006, 2004, 2003, 2001, 2000, 1999, 1996, 1995, 1992, 1991, 1990, 1986, 1985, 1981, 1980, 1976, 1975, 1972, 1971, 1969, 1967, 1966, 1965, 1964, 1963, 1961, 1960, 1958, 1957, 1955, 1954, 1952, 1951, 1949, 1948, 1947, 1946, 1945, 1944, 1942, 1940, 1939, 1938, 1937, 1936, 1935, 1934, 1933, 1932, 1931, 1930, 1929, 1928, 1927, 1926, 1925, 1924, 1923, 1921, 1920 |
| 835 NORTON AVE | 2013, 2008, 2004, 2003, 2000, 1999, 1996, 1995, 1992, 1991, 1990, 1985, 1981, 1980, 1975, 1971, 1970, 1969, 1966, 1965, 1964, 1963, 1962, 1961, 1958, 1957, 1956, 1954, 1952, 1950, 1949, 1948, 1947, 1946, 1945, 1944, 1942, 1940, 1939, 1938, 1937, 1936, 1935, 1934, 1933, 1932, 1931, 1930, 1929, 1928, 1927, 1926, 1925, 1924, 1923, 1921, 1920 |
| 835 NORTON AVE N | 2013, 2008, 2006, 2004, 2003, 2001, 2000, 1999, 1996, 1995, 1992, 1991, 1990, 1986, 1985, 1981, 1980, 1976, 1975, 1972, 1971, 1970, 1969, 1967, 1966, 1965, 1964, 1963, 1962, 1961, 1960, 1958, 1957, 1956, 1955, 1954, 1952, 1951, 1950, 1949, 1948, 1947, 1946, 1944, 1942, 1939, 1938, 1937, 1936, 1935, 1934, 1933, 1932, 1931, 1930, 1929, 1928, 1927, 1926, 1925, 1924, 1923, 1921, 1920 |
| 835 NORTON ST | 2013, 2008, 2006, 2004, 2003, 2001, 2000, 1999, 1996, 1995, 1992, 1991, 1990, 1986, 1985, 1981, 1980, 1976, 1972, 1971, 1970, 1969, 1967, 1966, 1965, 1964, 1963, 1962, 1961, 1960, 1958, 1957, 1956, 1955, 1954, 1952, 1951, 1950, 1949, 1948, 1947, 1946, 1945, 1944, 1942, 1940, 1939, 1938, 1937, 1936, 1935, 1934, 1933, 1932, 1931, 1930, 1929, 1928, 1927, 1926, 1925, 1924, 1923, 1921, 1920 |
| 837 NORTON AVE S | 2013, 2008, 2006, 2004, 2003, 2001, 2000, 1999, 1996, 1995, 1992, 1991, 1990, 1986, 1985, 1981, 1980, 1976, 1975, 1972, 1971, 1970, 1969, 1967, 1966, 1965, 1964, 1963, 1962, 1961, 1960, 1958, 1957, 1956, 1955, 1954, 1952, 1950, 1949, 1948, 1947, 1946, 1945, 1944, 1942, 1940, 1939, 1938, 1937, 1936, 1935, 1934, 1933, 1932, 1931, 1930, 1929, 1928, 1927, 1926, 1925, 1924, 1923, 1921, 1920 |
| 838 N NORTON AVE | 2013, 2008, 2006, 2004, 2003, 2001, 2000, 1999, 1996, 1995, 1992, 1991, 1990, 1986, 1985, 1981, 1976, 1975, 1972, 1971, 1969, 1967, 1966, 1965, 1964, 1963, 1962, 1961, 1960, 1958, 1957, 1955, 1954, 1952, 1951, 1949, 1948, 1947, 1946, 1945, 1944, 1942, 1940, 1939, 1938, 1937, 1936, 1935, 1934, 1933, 1932, 1931, 1930, 1929, 1928, 1927, 1926, 1925, 1924, 1923, 1921, 1920 |
| 838 NORTON AVE | 2013, 2008, 2006, 2004, 2003, 2000, 1999, 1996, 1995, 1992, 1990, 1986, 1981, 1980, 1976, 1975, 1971, 1970, 1969, 1966, 1965, 1964, 1963, 1962, 1961, 1958, 1957, 1956, 1954, 1952, 1950, 1949, 1948, 1947, 1946, 1945, 1944, 1942, 1940, 1939, 1938, 1937, 1936, 1935, 1934, 1933, 1932, 1931, 1930, 1929, 1928, 1927, 1926, 1925, 1924, 1923, 1921, 1920 |

# FINDINGS

| Address Researched | Address Not Identified in Research Source |
|---|---|
| 838 NORTON AVE N | 2013, 2008, 2006, 2004, 2003, 2001, 2000, 1999, 1996, 1995, 1992, 1991, 1990, 1986, 1985, 1981, 1980, 1976, 1975, 1972, 1971, 1970, 1969, 1967, 1966, 1965, 1964, 1963, 1962, 1961, 1960, 1958, 1957, 1956, 1955, 1954, 1952, 1951, 1950, 1949, 1948, 1947, 1946, 1944, 1942, 1939, 1938, 1937, 1936, 1935, 1934, 1933, 1932, 1931, 1930, 1929, 1928, 1927, 1926, 1925, 1924, 1923, 1921, 1920 |
| 838 NORTON ST | 2013, 2008, 2006, 2004, 2003, 2001, 2000, 1999, 1996, 1995, 1992, 1991, 1990, 1986, 1985, 1981, 1980, 1976, 1972, 1971, 1970, 1969, 1967, 1966, 1965, 1964, 1963, 1962, 1961, 1960, 1958, 1957, 1956, 1955, 1954, 1952, 1951, 1950, 1949, 1948, 1947, 1946, 1945, 1944, 1942, 1940, 1939, 1938, 1937, 1936, 1935, 1934, 1933, 1932, 1931, 1930, 1929, 1928, 1927, 1926, 1925, 1924, 1923, 1921, 1920 |
| 839 N NORTON AVE | 2013, 2008, 2006, 2004, 2003, 2001, 2000, 1999, 1996, 1995, 1992, 1991, 1990, 1986, 1985, 1981, 1976, 1975, 1972, 1971, 1969, 1967, 1966, 1965, 1964, 1963, 1961, 1960, 1958, 1957, 1955, 1954, 1952, 1951, 1949, 1948, 1947, 1946, 1945, 1944, 1942, 1940, 1939, 1938, 1937, 1936, 1935, 1934, 1933, 1932, 1931, 1930, 1929, 1928, 1927, 1926, 1925, 1924, 1923, 1921, 1920 |
| 839 NORTON AVE | 2013, 2008, 2004, 2003, 2000, 1999, 1996, 1995, 1992, 1991, 1990, 1986, 1981, 1980, 1976, 1975, 1971, 1970, 1969, 1966, 1965, 1964, 1963, 1962, 1961, 1958, 1957, 1956, 1954, 1952, 1950, 1949, 1948, 1947, 1946, 1945, 1944, 1942, 1940, 1939, 1938, 1937, 1936, 1935, 1934, 1933, 1932, 1931, 1930, 1929, 1928, 1927, 1926, 1925, 1924, 1923, 1921, 1920 |
| 839 NORTON AVE | 2013, 2006, 2004, 2003, 2001, 2000, 1999, 1996, 1995, 1992, 1991, 1990, 1986, 1985, 1981, 1980, 1976, 1975, 1972, 1971, 1970, 1969, 1967, 1966, 1965, 1964, 1963, 1962, 1961, 1960, 1958, 1957, 1956, 1955, 1954, 1952, 1951, 1950, 1949, 1948, 1947, 1946, 1945, 1944, 1942, 1940, 1939, 1938, 1937, 1936, 1935, 1934, 1933, 1932, 1931, 1930, 1929, 1928, 1927, 1926, 1925, 1924, 1923, 1921, 1920 |
| 839 NORTON AVE N | 2013, 2008, 2006, 2004, 2003, 2001, 2000, 1999, 1996, 1995, 1992, 1991, 1990, 1986, 1985, 1981, 1980, 1976, 1975, 1972, 1971, 1970, 1969, 1967, 1966, 1965, 1964, 1963, 1962, 1961, 1960, 1958, 1957, 1956, 1955, 1954, 1952, 1951, 1950, 1949, 1948, 1947, 1946, 1944, 1942, 1939, 1938, 1937, 1936, 1935, 1934, 1933, 1932, 1931, 1930, 1929, 1928, 1927, 1926, 1925, 1924, 1923, 1921, 1920 |
| 839 NORTON ST | 2013, 2008, 2006, 2004, 2003, 2001, 2000, 1999, 1996, 1995, 1992, 1991, 1990, 1986, 1985, 1981, 1980, 1976, 1972, 1971, 1970, 1969, 1967, 1966, 1965, 1964, 1963, 1962, 1961, 1960, 1958, 1957, 1956, 1955, 1954, 1952, 1951, 1950, 1949, 1948, 1947, 1946, 1945, 1944, 1942, 1940, 1939, 1938, 1937, 1936, 1935, 1934, 1933, 1932, 1931, 1930, 1929, 1928, 1927, 1926, 1925, 1924, 1923, 1921, 1920 |
| 840 NORTON AVE S | 2013, 2008, 2006, 2004, 2003, 2001, 2000, 1999, 1996, 1995, 1992, 1991, 1990, 1986, 1985, 1981, 1980, 1976, 1975, 1972, 1971, 1970, 1969, 1967, 1966, 1965, 1964, 1963, 1962, 1961, 1960, 1958, 1957, 1956, 1955, 1954, 1952, 1950, 1949, 1948, 1947, 1946, 1945, 1944, 1942, 1940, 1939, 1938, 1937, 1936, 1935, 1934, 1933, 1932, 1931, 1930, 1929, 1928, 1927, 1926, 1925, 1924, 1923, 1921, 1920 |
| 841 NORTON AVE S | 2013, 2008, 2006, 2004, 2003, 2001, 2000, 1999, 1996, 1995, 1992, 1991, 1990, 1986, 1985, 1981, 1980, 1976, 1975, 1972, 1971, 1970, 1969, 1967, 1966, 1965, 1964, 1963, 1962, 1961, 1960, 1958, 1957, 1956, 1955, 1954, 1952, 1950, 1949, 1948, 1947, 1946, 1945, 1944, 1942, 1940, 1939, 1938, 1937, 1936, 1935, 1934, 1933, 1932, 1931, 1930, 1929, 1928, 1927, 1926, 1925, 1924, 1923, 1921, 1920 |
| 842 N NORTON AVE | 2013, 2008, 2006, 2004, 2003, 2001, 2000, 1999, 1996, 1995, 1992, 1991, 1990, 1986, 1985, 1981, 1976, 1975, 1972, 1971, 1969, 1967, 1966, 1965, 1964, 1963, 1961, 1960, 1958, 1957, 1955, 1954, 1952, 1951, 1949, 1948, 1947, 1946, 1945, 1944, 1942, 1940, 1939, 1938, 1937, 1936, 1935, 1934, 1933, 1932, 1931, 1930, 1929, 1928, 1927, 1926, 1925, 1924, 1923, 1921, 1920 |
| 842 NORTON AVE | 2013, 2008, 2006, 2004, 2003, 2001, 2000, 1999, 1996, 1995, 1992, 1991, 1990, 1986, 1985, 1981, 1980, 1976, 1975, 1971, 1970, 1969, 1966, 1965, 1964, 1963, 1962, 1961, 1958, 1957, 1956, 1954, 1952, 1950, 1949, 1948, 1947, 1946, 1945, 1944, 1942, 1940, 1939, 1938, 1937, 1936, 1935, 1934, 1933, 1932, 1931, 1930, 1929, 1928, 1927, 1926, 1925, 1924, 1923, 1921, 1920 |

# FINDINGS

| Address Researched | Address Not Identified in Research Source |
|---|---|
| 842 NORTON AVE N | 2013, 2008, 2006, 2004, 2003, 2001, 2000, 1999, 1996, 1995, 1992, 1991, 1990, 1986, 1985, 1981, 1980, 1976, 1975, 1972, 1971, 1970, 1969, 1967, 1966, 1965, 1964, 1963, 1962, 1961, 1960, 1958, 1957, 1956, 1955, 1954, 1952, 1951, 1950, 1949, 1948, 1947, 1946, 1944, 1942, 1939, 1938, 1937, 1936, 1935, 1934, 1933, 1932, 1931, 1930, 1929, 1928, 1927, 1926, 1925, 1924, 1923, 1921, 1920 |
| 842 NORTON ST | 2013, 2008, 2006, 2004, 2003, 2001, 2000, 1999, 1996, 1995, 1992, 1991, 1990, 1986, 1985, 1981, 1980, 1976, 1972, 1971, 1970, 1969, 1967, 1966, 1965, 1964, 1963, 1962, 1961, 1960, 1958, 1957, 1956, 1955, 1954, 1952, 1951, 1950, 1949, 1948, 1947, 1946, 1945, 1944, 1942, 1940, 1939, 1938, 1937, 1936, 1935, 1934, 1933, 1932, 1931, 1930, 1929, 1928, 1927, 1926, 1925, 1924, 1923, 1921, 1920 |
| 843 N NORTON AVE | 2013, 2008, 2006, 2004, 2003, 2001, 2000, 1999, 1996, 1995, 1992, 1991, 1990, 1986, 1985, 1981, 1976, 1975, 1972, 1971, 1969, 1967, 1966, 1965, 1964, 1963, 1961, 1960, 1958, 1957, 1955, 1954, 1952, 1951, 1949, 1948, 1947, 1946, 1945, 1944, 1942, 1940, 1939, 1938, 1937, 1936, 1935, 1934, 1933, 1932, 1931, 1930, 1929, 1928, 1927, 1926, 1925, 1924, 1923, 1921, 1920 |
| 843 NORTON AVE | 2013, 2008, 2004, 2003, 2000, 1999, 1996, 1995, 1992, 1990, 1986, 1981, 1980, 1976, 1975, 1971, 1970, 1969, 1966, 1965, 1964, 1963, 1962, 1961, 1958, 1957, 1956, 1954, 1952, 1950, 1949, 1948, 1947, 1946, 1945, 1944, 1942, 1940, 1939, 1938, 1937, 1936, 1935, 1934, 1933, 1932, 1931, 1930, 1929, 1928, 1927, 1926, 1925, 1924, 1923, 1921, 1920 |
| 843 NORTON AVE N | 2013, 2008, 2006, 2004, 2003, 2001, 2000, 1999, 1996, 1995, 1992, 1991, 1990, 1986, 1985, 1981, 1980, 1976, 1975, 1972, 1971, 1970, 1969, 1967, 1966, 1965, 1964, 1963, 1962, 1961, 1960, 1958, 1957, 1956, 1955, 1954, 1952, 1951, 1950, 1949, 1948, 1947, 1946, 1944, 1942, 1939, 1938, 1937, 1936, 1935, 1934, 1933, 1932, 1931, 1930, 1929, 1928, 1927, 1926, 1925, 1924, 1923, 1921, 1920 |
| 843 NORTON ST | 2013, 2008, 2006, 2004, 2003, 2001, 2000, 1999, 1996, 1995, 1992, 1991, 1990, 1986, 1985, 1981, 1980, 1976, 1972, 1971, 1970, 1969, 1967, 1966, 1965, 1964, 1963, 1962, 1961, 1960, 1958, 1957, 1956, 1955, 1954, 1952, 1951, 1950, 1949, 1948, 1947, 1946, 1945, 1944, 1942, 1940, 1939, 1938, 1937, 1936, 1935, 1934, 1933, 1932, 1931, 1930, 1929, 1928, 1927, 1926, 1925, 1924, 1923, 1921, 1920 |
| 846 N NORTON AVE | 2013, 2008, 2006, 2004, 2003, 2001, 2000, 1999, 1996, 1995, 1992, 1991, 1990, 1986, 1985, 1981, 1976, 1975, 1972, 1971, 1969, 1967, 1966, 1965, 1964, 1963, 1961, 1960, 1958, 1957, 1955, 1954, 1952, 1951, 1950, 1949, 1948, 1947, 1946, 1945, 1944, 1942, 1940, 1939, 1938, 1937, 1936, 1935, 1934, 1933, 1932, 1931, 1930, 1929, 1928, 1927, 1926, 1925, 1924, 1923, 1921, 1920 |
| 846 NORTON AVE | 2013, 2008, 2006, 2004, 2003, 2001, 2000, 1999, 1996, 1995, 1992, 1991, 1990, 1986, 1985, 1981, 1980, 1976, 1975, 1971, 1970, 1969, 1966, 1965, 1964, 1963, 1962, 1961, 1958, 1957, 1956, 1954, 1952, 1950, 1949, 1948, 1947, 1946, 1945, 1944, 1942, 1940, 1939, 1938, 1937, 1936, 1935, 1934, 1933, 1932, 1931, 1930, 1929, 1928, 1927, 1926, 1925, 1924, 1923, 1921, 1920 |
| 846 NORTON AVE N | 2013, 2008, 2006, 2004, 2003, 2001, 2000, 1999, 1996, 1995, 1992, 1991, 1990, 1986, 1985, 1981, 1980, 1976, 1975, 1972, 1971, 1970, 1969, 1967, 1966, 1965, 1964, 1963, 1962, 1961, 1960, 1958, 1957, 1956, 1955, 1954, 1952, 1951, 1950, 1949, 1948, 1947, 1946, 1944, 1942, 1939, 1938, 1937, 1936, 1935, 1934, 1933, 1932, 1931, 1930, 1929, 1928, 1927, 1926, 1925, 1924, 1923, 1921, 1920 |
| 846 NORTON AVE S | 2013, 2008, 2006, 2004, 2003, 2001, 2000, 1999, 1996, 1995, 1992, 1991, 1990, 1986, 1985, 1981, 1980, 1976, 1975, 1972, 1971, 1970, 1969, 1967, 1966, 1965, 1964, 1963, 1962, 1961, 1960, 1958, 1957, 1956, 1955, 1954, 1952, 1950, 1949, 1948, 1947, 1946, 1945, 1944, 1942, 1940, 1939, 1938, 1937, 1936, 1935, 1934, 1933, 1932, 1931, 1930, 1929, 1928, 1927, 1926, 1925, 1924, 1923, 1921, 1920 |
| 846 NORTON ST | 2013, 2008, 2006, 2004, 2003, 2001, 2000, 1999, 1996, 1995, 1992, 1991, 1990, 1986, 1985, 1981, 1980, 1976, 1972, 1971, 1970, 1969, 1967, 1966, 1965, 1964, 1963, 1962, 1961, 1960, 1958, 1957, 1956, 1955, 1954, 1952, 1951, 1950, 1949, 1948, 1947, 1946, 1945, 1944, 1942, 1940, 1939, 1938, 1937, 1936, 1935, 1934, 1933, 1932, 1931, 1930, 1929, 1928, 1927, 1926, 1925, 1924, 1923, 1921, 1920 |

# FINDINGS

| Address Researched | Address Not Identified in Research Source |
|---|---|
| 847 AIR WAY | 2013, 2008, 2006, 2004, 2003, 2000, 1999, 1996, 1992, 1990, 1986, 1981, 1976, 1971, 1970, 1969, 1967, 1966, 1965, 1964, 1963, 1962, 1961, 1958, 1957, 1956, 1955, 1954, 1952, 1951, 1950, 1949, 1948, 1947, 1946, 1945, 1944, 1942, 1940, 1939, 1938, 1937, 1936, 1935, 1934, 1933, 1932, 1931, 1930, 1929, 1928, 1927, 1926, 1925, 1924, 1923, 1921, 1920 |
| 847 N NORTON AVE | 2013, 2008, 2006, 2004, 2003, 2001, 2000, 1999, 1996, 1995, 1992, 1991, 1990, 1986, 1985, 1981, 1976, 1975, 1972, 1971, 1969, 1967, 1966, 1965, 1964, 1963, 1961, 1960, 1958, 1957, 1955, 1954, 1952, 1951, 1949, 1948, 1947, 1946, 1945, 1944, 1942, 1940, 1939, 1938, 1937, 1936, 1935, 1934, 1933, 1932, 1931, 1930, 1929, 1928, 1927, 1926, 1925, 1924, 1923, 1921, 1920 |
| 847 NORTON AVE | 2013, 2008, 2004, 2003, 2000, 1999, 1996, 1992, 1990, 1986, 1981, 1980, 1976, 1975, 1971, 1970, 1969, 1966, 1965, 1964, 1963, 1962, 1961, 1958, 1957, 1956, 1954, 1952, 1950, 1949, 1948, 1947, 1946, 1945, 1944, 1942, 1940, 1939, 1938, 1937, 1936, 1935, 1934, 1933, 1932, 1931, 1930, 1929, 1928, 1927, 1926, 1925, 1924, 1923, 1921, 1920 |
| 847 NORTON AVE N | 2013, 2008, 2006, 2004, 2003, 2001, 2000, 1999, 1996, 1995, 1992, 1991, 1990, 1986, 1985, 1981, 1980, 1976, 1975, 1972, 1971, 1970, 1969, 1967, 1966, 1965, 1964, 1963, 1962, 1961, 1960, 1958, 1957, 1956, 1955, 1954, 1952, 1951, 1950, 1949, 1948, 1947, 1946, 1944, 1942, 1939, 1938, 1937, 1936, 1935, 1934, 1933, 1932, 1931, 1930, 1929, 1928, 1927, 1926, 1925, 1924, 1923, 1921, 1920 |
| 847 NORTON AVE S | 2013, 2008, 2006, 2004, 2003, 2001, 2000, 1999, 1996, 1995, 1992, 1991, 1990, 1986, 1985, 1981, 1980, 1976, 1975, 1972, 1971, 1970, 1969, 1967, 1966, 1965, 1964, 1963, 1962, 1961, 1960, 1958, 1957, 1956, 1955, 1954, 1952, 1950, 1949, 1948, 1947, 1946, 1945, 1944, 1942, 1940, 1939, 1938, 1937, 1936, 1935, 1934, 1933, 1932, 1931, 1930, 1929, 1928, 1927, 1926, 1925, 1924, 1923, 1921, 1920 |
| 847 NORTON ST | 2013, 2008, 2006, 2004, 2003, 2001, 2000, 1999, 1996, 1995, 1992, 1991, 1990, 1986, 1985, 1981, 1980, 1976, 1972, 1971, 1970, 1969, 1967, 1966, 1965, 1964, 1963, 1962, 1961, 1960, 1958, 1957, 1956, 1955, 1954, 1952, 1951, 1950, 1949, 1948, 1947, 1946, 1945, 1944, 1942, 1940, 1939, 1938, 1937, 1936, 1935, 1934, 1933, 1932, 1931, 1930, 1929, 1928, 1927, 1926, 1925, 1924, 1923, 1921, 1920 |
| 850 N NORTON AVE | 2013, 2008, 2006, 2004, 2003, 2001, 2000, 1999, 1996, 1995, 1992, 1991, 1990, 1986, 1985, 1981, 1976, 1975, 1972, 1971, 1969, 1967, 1966, 1965, 1964, 1963, 1961, 1960, 1958, 1957, 1955, 1954, 1952, 1951, 1949, 1948, 1947, 1946, 1945, 1944, 1942, 1940, 1939, 1938, 1937, 1936, 1935, 1934, 1933, 1932, 1931, 1930, 1929, 1928, 1927, 1926, 1925, 1924, 1923, 1921, 1920 |
| 850 NORTON AVE | 2013, 2008, 2006, 2004, 2003, 2001, 2000, 1999, 1996, 1995, 1992, 1991, 1990, 1986, 1985, 1981, 1980, 1976, 1975, 1971, 1970, 1969, 1966, 1965, 1964, 1963, 1962, 1961, 1958, 1957, 1956, 1954, 1952, 1950, 1949, 1948, 1947, 1946, 1945, 1944, 1942, 1940, 1939, 1938, 1937, 1936, 1935, 1934, 1933, 1932, 1931, 1930, 1929, 1928, 1927, 1926, 1925, 1924, 1923, 1921, 1920 |
| 850 NORTON AVE N | 2013, 2008, 2006, 2004, 2003, 2001, 2000, 1999, 1996, 1995, 1992, 1991, 1990, 1986, 1985, 1981, 1980, 1976, 1975, 1972, 1971, 1970, 1969, 1967, 1966, 1965, 1964, 1963, 1962, 1961, 1960, 1958, 1957, 1956, 1955, 1954, 1952, 1951, 1950, 1949, 1948, 1947, 1946, 1944, 1942, 1939, 1938, 1937, 1936, 1935, 1934, 1933, 1932, 1931, 1930, 1929, 1928, 1927, 1926, 1925, 1924, 1923, 1921, 1920 |
| 850 NORTON AVE S | 2013, 2008, 2006, 2004, 2003, 2001, 2000, 1999, 1996, 1995, 1992, 1991, 1990, 1986, 1985, 1981, 1980, 1976, 1975, 1972, 1971, 1970, 1969, 1967, 1966, 1965, 1964, 1963, 1962, 1961, 1960, 1958, 1957, 1956, 1955, 1954, 1952, 1950, 1949, 1948, 1947, 1946, 1945, 1944, 1942, 1940, 1939, 1938, 1937, 1936, 1935, 1934, 1933, 1932, 1931, 1930, 1929, 1928, 1927, 1926, 1925, 1924, 1923, 1921, 1920 |
| 850 NORTON ST | 2013, 2008, 2006, 2004, 2003, 2001, 2000, 1999, 1996, 1995, 1992, 1991, 1990, 1986, 1985, 1981, 1980, 1976, 1972, 1971, 1970, 1969, 1967, 1966, 1965, 1964, 1963, 1962, 1961, 1960, 1958, 1957, 1956, 1955, 1954, 1952, 1951, 1950, 1949, 1948, 1947, 1946, 1945, 1944, 1942, 1940, 1939, 1938, 1937, 1936, 1935, 1934, 1933, 1932, 1931, 1930, 1929, 1928, 1927, 1926, 1925, 1924, 1923, 1921, 1920 |

# FINDINGS

| Address Researched | Address Not Identified in Research Source |
|---|---|
| 851 N NORTON AVE | 2013, 2008, 2006, 2004, 2003, 2001, 2000, 1999, 1996, 1995, 1992, 1991, 1990, 1986, 1985, 1981, 1980, 1976, 1975, 1972, 1971, 1969, 1967, 1966, 1965, 1964, 1963, 1961, 1960, 1958, 1957, 1955, 1954, 1952, 1951, 1949, 1948, 1947, 1946, 1945, 1944, 1942, 1940, 1939, 1938, 1937, 1936, 1935, 1934, 1933, 1932, 1931, 1930, 1929, 1928, 1927, 1926, 1925, 1924, 1923, 1921, 1920 |
| 851 NORTON AVE | 2013, 2008, 2004, 2003, 2000, 1999, 1996, 1995, 1992, 1990, 1986, 1985, 1981, 1980, 1976, 1975, 1971, 1970, 1969, 1966, 1965, 1964, 1963, 1962, 1961, 1958, 1957, 1956, 1954, 1952, 1950, 1949, 1948, 1947, 1946, 1945, 1944, 1942, 1940, 1939, 1938, 1937, 1936, 1935, 1934, 1933, 1932, 1931, 1930, 1929, 1928, 1927, 1926, 1925, 1924, 1923, 1921, 1920 |
| 851 NORTON AVE N | 2013, 2008, 2006, 2004, 2003, 2001, 2000, 1999, 1996, 1995, 1992, 1991, 1990, 1986, 1985, 1981, 1980, 1976, 1975, 1972, 1971, 1970, 1969, 1967, 1966, 1965, 1964, 1963, 1962, 1961, 1960, 1958, 1957, 1956, 1955, 1954, 1952, 1951, 1950, 1949, 1948, 1947, 1946, 1944, 1942, 1939, 1938, 1937, 1936, 1935, 1934, 1933, 1932, 1931, 1930, 1929, 1928, 1927, 1926, 1925, 1924, 1923, 1921, 1920 |
| 851 NORTON AVE S | 2013, 2008, 2006, 2004, 2003, 2001, 2000, 1999, 1996, 1995, 1992, 1991, 1990, 1986, 1985, 1981, 1980, 1976, 1975, 1972, 1971, 1970, 1969, 1967, 1966, 1965, 1964, 1963, 1962, 1961, 1960, 1958, 1957, 1956, 1955, 1954, 1952, 1950, 1949, 1948, 1947, 1946, 1945, 1944, 1942, 1940, 1939, 1938, 1937, 1936, 1935, 1934, 1933, 1932, 1931, 1930, 1929, 1928, 1927, 1926, 1925, 1924, 1923, 1921, 1920 |
| 851 NORTON ST | 2013, 2008, 2006, 2004, 2003, 2001, 2000, 1999, 1996, 1995, 1992, 1991, 1990, 1986, 1985, 1981, 1980, 1976, 1972, 1971, 1970, 1969, 1967, 1966, 1965, 1964, 1963, 1962, 1961, 1960, 1958, 1957, 1956, 1955, 1954, 1952, 1951, 1950, 1949, 1948, 1947, 1946, 1945, 1944, 1942, 1940, 1939, 1938, 1937, 1936, 1935, 1934, 1933, 1932, 1931, 1930, 1929, 1928, 1927, 1926, 1925, 1924, 1923, 1921, 1920 |
| 854 N NORTON AVE | 2013, 2008, 2006, 2004, 2003, 2001, 2000, 1999, 1996, 1995, 1992, 1991, 1990, 1986, 1985, 1981, 1976, 1975, 1972, 1971, 1969, 1967, 1966, 1965, 1964, 1963, 1961, 1960, 1958, 1957, 1955, 1954, 1952, 1951, 1949, 1948, 1947, 1946, 1945, 1944, 1942, 1940, 1939, 1938, 1937, 1936, 1935, 1934, 1933, 1932, 1931, 1930, 1929, 1928, 1927, 1926, 1925, 1924, 1923, 1921, 1920 |
| 854 NORTON AVE | 2013, 2008, 2006, 2004, 2003, 2001, 2000, 1999, 1996, 1995, 1992, 1991, 1990, 1986, 1985, 1981, 1980, 1976, 1975, 1971, 1970, 1969, 1966, 1965, 1964, 1963, 1962, 1961, 1958, 1957, 1956, 1954, 1952, 1950, 1949, 1948, 1947, 1946, 1945, 1944, 1942, 1940, 1939, 1938, 1937, 1936, 1935, 1934, 1933, 1932, 1931, 1930, 1929, 1928, 1927, 1926, 1925, 1924, 1923, 1921, 1920 |
| 854 NORTON AVE N | 2013, 2008, 2006, 2004, 2003, 2001, 2000, 1999, 1996, 1995, 1992, 1991, 1990, 1986, 1985, 1981, 1980, 1976, 1975, 1972, 1971, 1970, 1969, 1967, 1966, 1965, 1964, 1963, 1962, 1961, 1960, 1958, 1957, 1956, 1955, 1954, 1952, 1951, 1950, 1949, 1948, 1947, 1946, 1944, 1942, 1939, 1938, 1937, 1936, 1935, 1934, 1933, 1932, 1931, 1930, 1929, 1928, 1927, 1926, 1925, 1924, 1923, 1921, 1920 |
| 857 N NORTON AVE | 2013, 2008, 2006, 2004, 2003, 2001, 2000, 1999, 1996, 1995, 1992, 1991, 1990, 1986, 1985, 1981, 1980, 1976, 1975, 1972, 1971, 1970, 1969, 1967, 1966, 1965, 1964, 1963, 1961, 1960, 1958, 1957, 1955, 1954, 1952, 1951, 1949, 1948, 1947, 1946, 1945, 1944, 1942, 1940, 1939, 1938, 1937, 1936, 1935, 1934, 1933, 1932, 1931, 1930, 1929, 1928, 1927, 1926, 1925, 1924, 1923, 1921, 1920 |
| 857 NORTON AVE | 2013, 2008, 2006, 2004, 2003, 2001, 2000, 1999, 1996, 1995, 1992, 1991, 1990, 1986, 1985, 1981, 1980, 1976, 1975, 1971, 1970, 1969, 1966, 1965, 1964, 1963, 1962, 1961, 1958, 1957, 1956, 1954, 1952, 1950, 1949, 1948, 1947, 1946, 1945, 1944, 1942, 1940, 1939, 1938, 1937, 1936, 1935, 1934, 1933, 1932, 1931, 1930, 1929, 1928, 1927, 1926, 1925, 1924, 1923, 1921, 1920 |
| 857 NORTON AVE N | 2013, 2008, 2006, 2004, 2003, 2001, 2000, 1999, 1996, 1995, 1992, 1991, 1990, 1986, 1985, 1981, 1980, 1976, 1975, 1972, 1971, 1970, 1969, 1967, 1966, 1965, 1964, 1963, 1962, 1961, 1960, 1958, 1957, 1956, 1955, 1954, 1952, 1951, 1950, 1949, 1948, 1947, 1946, 1944, 1942, 1940, 1939, 1938, 1937, 1936, 1935, 1934, 1933, 1932, 1931, 1930, 1929, 1928, 1927, 1926, 1925, 1924, 1923, 1921, 1920 |

# FINDINGS

| Address Researched | Address Not Identified in Research Source |
|---|---|
| 857 NORTON AVE S | 2013, 2008, 2006, 2004, 2003, 2001, 2000, 1999, 1996, 1995, 1992, 1991, 1990, 1986, 1985, 1981, 1980, 1976, 1975, 1972, 1971, 1970, 1969, 1967, 1966, 1965, 1964, 1963, 1962, 1961, 1960, 1958, 1957, 1956, 1955, 1954, 1952, 1950, 1949, 1948, 1947, 1946, 1945, 1944, 1942, 1940, 1939, 1938, 1937, 1936, 1935, 1934, 1933, 1932, 1931, 1930, 1929, 1928, 1927, 1926, 1925, 1924, 1923, 1921, 1920 |
| 860 N NORTON AVE | 2013, 2008, 2006, 2004, 2003, 2001, 2000, 1999, 1996, 1995, 1992, 1991, 1990, 1986, 1985, 1981, 1980, 1976, 1975, 1972, 1971, 1970, 1969, 1967, 1966, 1965, 1964, 1963, 1962, 1961, 1960, 1958, 1957, 1956, 1955, 1954, 1952, 1951, 1950, 1949, 1948, 1947, 1946, 1945, 1944, 1942, 1940, 1939, 1938, 1937, 1936, 1935, 1934, 1933, 1932, 1931, 1930, 1929, 1928, 1927, 1926, 1925, 1923, 1921, 1920 |
| 860 NORTON AVE S | 2013, 2008, 2006, 2004, 2003, 2001, 2000, 1999, 1996, 1995, 1992, 1991, 1990, 1986, 1985, 1981, 1980, 1976, 1975, 1972, 1971, 1970, 1969, 1967, 1966, 1965, 1964, 1963, 1962, 1961, 1960, 1958, 1957, 1956, 1955, 1954, 1952, 1950, 1949, 1948, 1947, 1946, 1945, 1944, 1942, 1940, 1939, 1938, 1937, 1936, 1935, 1934, 1933, 1932, 1931, 1930, 1929, 1928, 1927, 1926, 1925, 1924, 1923, 1921, 1920 |
| 861 NORTON AVE S | 2013, 2008, 2006, 2004, 2003, 2001, 2000, 1999, 1996, 1995, 1992, 1991, 1990, 1986, 1985, 1981, 1980, 1976, 1975, 1972, 1971, 1970, 1969, 1967, 1966, 1965, 1964, 1963, 1962, 1961, 1960, 1958, 1957, 1956, 1955, 1954, 1952, 1950, 1949, 1948, 1947, 1946, 1945, 1944, 1942, 1940, 1939, 1938, 1937, 1936, 1935, 1934, 1933, 1932, 1931, 1930, 1929, 1928, 1927, 1926, 1925, 1924, 1923, 1921, 1920 |
| 863 NORTON AVE S | 2013, 2008, 2006, 2004, 2003, 2001, 2000, 1999, 1996, 1995, 1992, 1991, 1990, 1986, 1985, 1981, 1980, 1976, 1975, 1972, 1971, 1970, 1969, 1967, 1966, 1965, 1964, 1963, 1962, 1961, 1960, 1958, 1957, 1956, 1955, 1954, 1952, 1950, 1949, 1948, 1947, 1946, 1945, 1944, 1942, 1940, 1939, 1938, 1937, 1936, 1935, 1934, 1933, 1932, 1931, 1930, 1929, 1928, 1927, 1926, 1925, 1924, 1923, 1921, 1920 |
| 865 NORTON AVE | 2013, 2008, 2006, 2004, 2003, 2001, 2000, 1999, 1996, 1995, 1992, 1991, 1990, 1986, 1985, 1980, 1976, 1975, 1972, 1971, 1970, 1969, 1967, 1966, 1965, 1964, 1963, 1962, 1961, 1960, 1958, 1957, 1956, 1955, 1954, 1952, 1951, 1950, 1949, 1948, 1947, 1946, 1945, 1944, 1942, 1940, 1939, 1938, 1937, 1936, 1935, 1934, 1933, 1932, 1931, 1930, 1929, 1928, 1927, 1926, 1925, 1924, 1923, 1921, 1920 |
| 865 NORTON AVE S | 2013, 2008, 2006, 2004, 2003, 2001, 2000, 1999, 1996, 1995, 1992, 1991, 1990, 1986, 1985, 1981, 1980, 1976, 1975, 1972, 1971, 1970, 1969, 1967, 1966, 1965, 1964, 1963, 1962, 1961, 1960, 1958, 1957, 1956, 1955, 1954, 1952, 1950, 1949, 1948, 1947, 1946, 1945, 1944, 1942, 1940, 1939, 1938, 1937, 1936, 1935, 1934, 1933, 1932, 1931, 1930, 1929, 1928, 1927, 1926, 1925, 1924, 1923, 1921, 1920 |
| 900 GRAND CENTRAL AVE | 2013, 2008, 2004, 2003, 2001, 2000, 1999, 1996, 1992, 1991, 1990, 1986, 1985, 1981, 1980, 1976, 1975, 1970, 1969, 1967, 1966, 1965, 1964, 1963, 1962, 1961, 1960, 1958, 1957, 1956, 1955, 1954, 1952, 1951, 1950, 1949, 1948, 1947, 1946, 1945, 1944, 1942, 1940, 1939, 1938, 1937, 1936, 1935, 1934, 1933, 1932, 1931, 1930, 1929, 1928, 1927, 1926, 1925, 1924, 1923, 1921, 1920 |
| 900 GRAND CENTRAL AVE | 2013, 2006, 2004, 2003, 2001, 2000, 1999, 1996, 1995, 1992, 1991, 1990, 1986, 1985, 1981, 1980, 1976, 1975, 1972, 1971, 1970, 1969, 1967, 1966, 1965, 1964, 1963, 1962, 1961, 1960, 1958, 1957, 1956, 1955, 1954, 1952, 1951, 1950, 1949, 1948, 1947, 1946, 1945, 1944, 1942, 1940, 1939, 1938, 1937, 1936, 1935, 1934, 1933, 1932, 1931, 1930, 1929, 1928, 1927, 1926, 1925, 1924, 1923, 1921, 1920 |
| 905 AIR WAY | 2013, 2008, 2006, 2004, 2003, 2001, 2000, 1999, 1996, 1995, 1992, 1991, 1990, 1986, 1976, 1975, 1969, 1966, 1965, 1963, 1961, 1954, 1952, 1951, 1950, 1949, 1948, 1947, 1946, 1945, 1944, 1942, 1940, 1939, 1938, 1937, 1936, 1935, 1934, 1933, 1932, 1931, 1930, 1929, 1928, 1927, 1926, 1925, 1924, 1923, 1921, 1920 |
| 907 GRAND CENTRAL AVE | 2013, 2008, 2006, 2004, 2003, 2001, 2000, 1999, 1996, 1995, 1992, 1991, 1990, 1986, 1985, 1981, 1980, 1976, 1975, 1972, 1971, 1970, 1969, 1967, 1966, 1965, 1964, 1963, 1962, 1961, 1958, 1957, 1956, 1955, 1954, 1952, 1951, 1950, 1949, 1948, 1947, 1946, 1945, 1944, 1942, 1940, 1939, 1938, 1937, 1936, 1935, 1934, 1933, 1932, 1931, 1930, 1929, 1928, 1927, 1926, 1925, 1924, 1923, 1921, 1920 |

# FINDINGS

| Address Researched | Address Not Identified in Research Source |
|---|---|
| 908 AIR WAY | 2013, 2008, 2006, 2004, 2003, 2001, 2000, 1999, 1996, 1995, 1992, 1991, 1990, 1986, 1985, 1981, 1976, 1975, 1972, 1971, 1970, 1969, 1967, 1966, 1965, 1964, 1963, 1962, 1961, 1960, 1958, 1957, 1956, 1955, 1954, 1952, 1951, 1950, 1949, 1948, 1947, 1946, 1945, 1944, 1942, 1940, 1939, 1938, 1937, 1936, 1935, 1934, 1933, 1932, 1931, 1930, 1929, 1928, 1927, 1926, 1925, 1924, 1923, 1921, 1920 |
| 910 GRAND CENTRAL AVE | 2013, 2008, 2006, 2004, 2003, 2000, 1999, 1996, 1995, 1992, 1991, 1990, 1986, 1985, 1981, 1972, 1971, 1970, 1969, 1967, 1966, 1965, 1964, 1963, 1962, 1961, 1960, 1958, 1957, 1956, 1955, 1954, 1952, 1951, 1950, 1949, 1948, 1947, 1946, 1945, 1944, 1942, 1940, 1939, 1938, 1937, 1936, 1935, 1934, 1933, 1932, 1931, 1930, 1929, 1928, 1927, 1926, 1925, 1924, 1923, 1921, 1920 |
| 911 AIR WAY | 2013, 2008, 2006, 2004, 2003, 2001, 2000, 1999, 1996, 1992, 1990, 1986, 1981, 1976, 1969, 1966, 1963, 1961, 1954, 1952, 1949, 1948, 1947, 1946, 1945, 1944, 1942, 1940, 1939, 1938, 1937, 1936, 1935, 1934, 1933, 1932, 1931, 1930, 1929, 1928, 1927, 1926, 1925, 1924, 1923, 1921, 1920 |
| 914 AIR WAY | 2013, 2008, 2006, 2004, 2003, 2001, 2000, 1999, 1996, 1995, 1992, 1991, 1990, 1986, 1985, 1981, 1980, 1976, 1975, 1972, 1971, 1970, 1969, 1967, 1966, 1965, 1964, 1963, 1962, 1961, 1960, 1957, 1956, 1954, 1952, 1951, 1950, 1949, 1948, 1947, 1946, 1945, 1944, 1942, 1940, 1939, 1938, 1937, 1936, 1935, 1934, 1933, 1932, 1931, 1930, 1929, 1928, 1927, 1926, 1925, 1924, 1923, 1921, 1920 |
| 915 AIR WAY | 2013, 2008, 2006, 2004, 2003, 2000, 1999, 1996, 1995, 1992, 1991, 1990, 1986, 1976, 1971, 1969, 1966, 1965, 1964, 1963, 1962, 1961, 1958, 1957, 1956, 1954, 1952, 1949, 1948, 1947, 1946, 1945, 1944, 1942, 1940, 1939, 1938, 1937, 1936, 1935, 1934, 1933, 1932, 1931, 1930, 1929, 1928, 1927, 1926, 1925, 1924, 1923, 1921, 1920 |
| 915 AIR WAY | 2008, 2006, 2004, 2003, 2001, 2000, 1999, 1996, 1995, 1992, 1991, 1990, 1986, 1985, 1981, 1980, 1976, 1975, 1972, 1971, 1970, 1969, 1967, 1966, 1965, 1964, 1963, 1962, 1961, 1960, 1958, 1957, 1956, 1955, 1954, 1952, 1951, 1950, 1949, 1948, 1947, 1946, 1945, 1944, 1942, 1940, 1939, 1938, 1937, 1936, 1935, 1934, 1933, 1932, 1931, 1930, 1929, 1928, 1927, 1926, 1925, 1924, 1923, 1921, 1920 |
| 920 AIR WAY | 2013, 2008, 2006, 2004, 2003, 2001, 2000, 1999, 1996, 1995, 1992, 1991, 1990, 1986, 1985, 1981, 1980, 1976, 1975, 1971, 1969, 1966, 1965, 1964, 1963, 1962, 1961, 1960, 1958, 1957, 1956, 1955, 1954, 1952, 1951, 1950, 1949, 1948, 1947, 1946, 1945, 1944, 1942, 1940, 1939, 1938, 1937, 1936, 1935, 1934, 1933, 1932, 1931, 1930, 1929, 1928, 1927, 1926, 1925, 1924, 1923, 1921, 1920 |
| 923 AIR WAY | 2013, 2008, 2006, 2004, 2003, 2000, 1999, 1996, 1995, 1992, 1991, 1990, 1986, 1985, 1981, 1980, 1976, 1975, 1972, 1971, 1970, 1969, 1967, 1966, 1965, 1964, 1963, 1962, 1961, 1960, 1958, 1957, 1956, 1955, 1954, 1952, 1951, 1950, 1949, 1948, 1947, 1946, 1945, 1944, 1942, 1940, 1939, 1938, 1937, 1936, 1935, 1934, 1933, 1932, 1931, 1930, 1929, 1928, 1927, 1926, 1925, 1924, 1923, 1921, 1920 |
| 927 AIR WAY | 2013, 2008, 2006, 2004, 2003, 2000, 1999, 1996, 1995, 1992, 1991, 1990, 1986, 1985, 1981, 1980, 1976, 1975, 1971, 1970, 1969, 1966, 1965, 1964, 1963, 1961, 1958, 1957, 1954, 1952, 1949, 1948, 1947, 1946, 1945, 1944, 1942, 1940, 1939, 1938, 1937, 1936, 1935, 1934, 1933, 1932, 1931, 1930, 1929, 1928, 1927, 1926, 1925, 1924, 1923, 1921, 1920 |
| 927 AIR WAY | 2006, 2004, 2003, 2001, 2000, 1999, 1996, 1995, 1992, 1991, 1990, 1986, 1985, 1981, 1980, 1976, 1975, 1972, 1971, 1970, 1969, 1967, 1966, 1965, 1964, 1963, 1962, 1961, 1960, 1958, 1957, 1956, 1955, 1954, 1952, 1951, 1950, 1949, 1948, 1947, 1946, 1945, 1944, 1942, 1940, 1939, 1938, 1937, 1936, 1935, 1934, 1933, 1932, 1931, 1930, 1929, 1928, 1927, 1926, 1925, 1924, 1923, 1921, 1920 |
| 930 1/2 ZOOK DR | 2013, 2008, 2006, 2004, 2003, 2001, 2000, 1999, 1996, 1995, 1992, 1991, 1990, 1986, 1985, 1981, 1976, 1975, 1971, 1970, 1969, 1966, 1965, 1964, 1963, 1962, 1961, 1958, 1957, 1954, 1952, 1951, 1950, 1949, 1948, 1947, 1946, 1945, 1944, 1942, 1940, 1939, 1938, 1937, 1936, 1935, 1934, 1933, 1932, 1931, 1930, 1929, 1928, 1927, 1926, 1925, 1924, 1923, 1921, 1920 |

# FINDINGS

| Address Researched | Address Not Identified in Research Source |
|---|---|
| 930 AIR WAY | 2013, 2008, 2006, 2004, 2003, 2000, 1999, 1996, 1995, 1992, 1991, 1990, 1986, 1985, 1981, 1980, 1976, 1971, 1970, 1969, 1966, 1965, 1964, 1963, 1962, 1961, 1960, 1958, 1957, 1956, 1955, 1954, 1952, 1951, 1950, 1949, 1948, 1947, 1946, 1945, 1944, 1942, 1940, 1939, 1938, 1937, 1936, 1935, 1934, 1933, 1932, 1931, 1930, 1929, 1928, 1927, 1926, 1925, 1924, 1923, 1921, 1920 |
| 930 ZOOK DR | 2013, 2008, 2006, 2004, 2003, 2000, 1999, 1996, 1995, 1992, 1991, 1990, 1986, 1985, 1981, 1980, 1976, 1971, 1970, 1969, 1966, 1965, 1964, 1963, 1961, 1958, 1957, 1954, 1952, 1951, 1949, 1948, 1947, 1946, 1945, 1944, 1942, 1940, 1939, 1938, 1937, 1936, 1935, 1934, 1933, 1932, 1931, 1930, 1929, 1928, 1927, 1926, 1925, 1924, 1923, 1921, 1920 |
| 930 ZOOK DR W | 2013, 2008, 2006, 2004, 2003, 2001, 2000, 1999, 1996, 1995, 1992, 1991, 1990, 1986, 1985, 1981, 1980, 1976, 1975, 1972, 1971, 1970, 1969, 1967, 1966, 1965, 1964, 1963, 1962, 1961, 1960, 1958, 1957, 1956, 1955, 1954, 1952, 1951, 1950, 1949, 1948, 1947, 1946, 1944, 1942, 1940, 1939, 1938, 1937, 1936, 1935, 1934, 1933, 1932, 1931, 1930, 1929, 1928, 1927, 1926, 1925, 1924, 1923, 1921, 1920 |
| 931 AIR WAY | 2013, 2008, 2006, 2004, 2003, 2000, 1999, 1996, 1995, 1992, 1991, 1990, 1986, 1985, 1981, 1976, 1975, 1972, 1971, 1970, 1969, 1967, 1966, 1965, 1964, 1963, 1962, 1961, 1960, 1958, 1957, 1956, 1954, 1952, 1950, 1949, 1948, 1947, 1946, 1945, 1944, 1942, 1940, 1939, 1938, 1937, 1936, 1935, 1934, 1933, 1932, 1931, 1930, 1929, 1928, 1927, 1926, 1925, 1924, 1923, 1921, 1920 |
| 932 GRAND CENTRAL AVE | 2013, 2008, 2004, 2003, 2000, 1999, 1996, 1995, 1992, 1976, 1969, 1966, 1965, 1964, 1963, 1962, 1961, 1960, 1958, 1957, 1956, 1955, 1954, 1952, 1951, 1950, 1949, 1948, 1947, 1946, 1945, 1944, 1942, 1940, 1939, 1938, 1937, 1936, 1935, 1934, 1933, 1932, 1931, 1930, 1929, 1928, 1927, 1926, 1925, 1924, 1923, 1921, 1920 |
| 932 GRAND CENTRAL AVE | 2006, 2004, 2003, 2001, 2000, 1999, 1996, 1995, 1992, 1991, 1990, 1986, 1985, 1981, 1980, 1976, 1975, 1972, 1971, 1970, 1969, 1967, 1966, 1965, 1964, 1963, 1962, 1961, 1960, 1958, 1957, 1956, 1955, 1954, 1952, 1951, 1950, 1949, 1948, 1947, 1946, 1945, 1944, 1942, 1940, 1939, 1938, 1937, 1936, 1935, 1934, 1933, 1932, 1931, 1930, 1929, 1928, 1927, 1926, 1925, 1924, 1923, 1921, 1920 |
| 932 ZOOK DR | 2013, 2008, 2006, 2004, 2003, 2000, 1999, 1996, 1995, 1992, 1991, 1990, 1986, 1985, 1981, 1976, 1975, 1971, 1970, 1969, 1966, 1965, 1964, 1963, 1962, 1961, 1958, 1957, 1954, 1952, 1951, 1950, 1949, 1948, 1947, 1946, 1945, 1944, 1942, 1940, 1939, 1938, 1937, 1936, 1935, 1934, 1933, 1932, 1931, 1930, 1929, 1928, 1927, 1926, 1925, 1924, 1923, 1921, 1920 |
| 933 AIR WAY | 2013, 2008, 2004, 2003, 2000, 1999, 1996, 1995, 1992, 1990, 1986, 1976, 1969, 1966, 1965, 1963, 1961, 1957, 1954, 1952, 1949, 1948, 1947, 1946, 1945, 1944, 1942, 1940, 1939, 1938, 1937, 1936, 1935, 1934, 1933, 1932, 1931, 1930, 1929, 1928, 1927, 1926, 1925, 1924, 1923, 1921, 1920 |
| 933 AIR WAY | 2006, 2004, 2003, 2001, 2000, 1999, 1996, 1995, 1992, 1991, 1990, 1986, 1985, 1981, 1980, 1976, 1975, 1972, 1971, 1970, 1969, 1967, 1966, 1965, 1964, 1963, 1962, 1961, 1960, 1958, 1957, 1956, 1955, 1954, 1952, 1951, 1950, 1949, 1948, 1947, 1946, 1945, 1944, 1942, 1940, 1939, 1938, 1937, 1936, 1935, 1934, 1933, 1932, 1931, 1930, 1929, 1928, 1927, 1926, 1925, 1924, 1923, 1921, 1920 |
| 934 ZOOK DR | 2013, 2008, 2004, 2003, 2000, 1999, 1996, 1995, 1992, 1991, 1990, 1986, 1985, 1981, 1980, 1976, 1975, 1971, 1969, 1966, 1965, 1964, 1963, 1961, 1958, 1957, 1954, 1952, 1951, 1949, 1948, 1947, 1946, 1945, 1944, 1942, 1940, 1939, 1938, 1937, 1936, 1935, 1934, 1933, 1932, 1931, 1930, 1929, 1928, 1927, 1926, 1925, 1924, 1923, 1921, 1920 |
| 934 ZOOK DR W | 2013, 2008, 2006, 2004, 2003, 2001, 2000, 1999, 1996, 1995, 1992, 1991, 1990, 1986, 1985, 1981, 1980, 1976, 1975, 1972, 1971, 1970, 1969, 1967, 1966, 1965, 1964, 1963, 1962, 1961, 1960, 1958, 1957, 1956, 1955, 1954, 1952, 1951, 1950, 1949, 1948, 1947, 1946, 1944, 1942, 1939, 1938, 1937, 1936, 1935, 1934, 1933, 1932, 1931, 1930, 1929, 1928, 1927, 1926, 1925, 1924, 1923, 1921, 1920 |

# FINDINGS

| Address Researched | Address Not Identified in Research Source |
|---|---|
| 938 ZOOK DR | 2013, 2008, 2004, 2003, 2000, 1999, 1996, 1992, 1991, 1990, 1986, 1981, 1976, 1971, 1969, 1966, 1965, 1964, 1963, 1961, 1958, 1957, 1954, 1952, 1951, 1949, 1948, 1947, 1946, 1945, 1944, 1942, 1940, 1939, 1938, 1937, 1936, 1935, 1934, 1933, 1932, 1931, 1930, 1929, 1928, 1927, 1926, 1925, 1924, 1923, 1921, 1920 |
| 938 ZOOK DR W | 2013, 2008, 2006, 2004, 2003, 2001, 2000, 1999, 1996, 1995, 1992, 1991, 1990, 1986, 1985, 1981, 1980, 1976, 1975, 1972, 1971, 1970, 1969, 1967, 1966, 1965, 1964, 1963, 1962, 1961, 1960, 1958, 1957, 1956, 1955, 1954, 1952, 1951, 1950, 1949, 1948, 1947, 1946, 1944, 1942, 1940, 1939, 1938, 1937, 1936, 1935, 1934, 1933, 1932, 1931, 1930, 1929, 1928, 1927, 1926, 1925, 1924, 1923, 1921, 1920 |
| 941 AIR WAY | 2013, 2008, 2004, 2003, 2000, 1999, 1996, 1992, 1976, 1969, 1966, 1965, 1964, 1963, 1961, 1958, 1957, 1955, 1954, 1952, 1951, 1950, 1949, 1948, 1947, 1946, 1945, 1944, 1942, 1940, 1939, 1938, 1937, 1936, 1935, 1934, 1933, 1932, 1931, 1930, 1929, 1928, 1927, 1926, 1925, 1924, 1923, 1921, 1920 |
| 941 AIR WAY | 2006, 2004, 2003, 2001, 2000, 1999, 1996, 1995, 1992, 1991, 1990, 1986, 1985, 1981, 1980, 1976, 1975, 1972, 1971, 1970, 1969, 1967, 1966, 1965, 1964, 1963, 1962, 1961, 1960, 1958, 1957, 1956, 1955, 1954, 1952, 1951, 1950, 1949, 1948, 1947, 1946, 1945, 1944, 1942, 1940, 1939, 1938, 1937, 1936, 1935, 1934, 1933, 1932, 1931, 1930, 1929, 1928, 1927, 1926, 1925, 1924, 1923, 1921, 1920 |
| 944 ZOOK DR | 2013, 2008, 2004, 2003, 2000, 1999, 1996, 1995, 1992, 1991, 1990, 1986, 1985, 1981, 1980, 1976, 1975, 1971, 1969, 1966, 1965, 1964, 1963, 1961, 1958, 1957, 1955, 1954, 1952, 1951, 1949, 1948, 1947, 1946, 1945, 1944, 1942, 1940, 1939, 1938, 1937, 1936, 1935, 1934, 1933, 1932, 1931, 1930, 1929, 1928, 1927, 1926, 1925, 1924, 1923, 1921, 1920 |
| 944 ZOOK DR W | 2013, 2008, 2006, 2004, 2003, 2001, 2000, 1999, 1996, 1995, 1992, 1991, 1990, 1986, 1985, 1981, 1980, 1976, 1975, 1972, 1971, 1970, 1969, 1967, 1966, 1965, 1964, 1963, 1962, 1961, 1960, 1958, 1957, 1956, 1955, 1954, 1952, 1951, 1950, 1949, 1948, 1947, 1946, 1944, 1942, 1939, 1938, 1937, 1936, 1935, 1934, 1933, 1932, 1931, 1930, 1929, 1928, 1927, 1926, 1925, 1924, 1923, 1921, 1920 |
| 945 AIR WAY | 2013, 2008, 2006, 2004, 2003, 2000, 1999, 1996, 1992, 1990, 1986, 1985, 1981, 1980, 1976, 1975, 1972, 1971, 1970, 1969, 1967, 1966, 1965, 1964, 1963, 1962, 1961, 1960, 1958, 1957, 1956, 1955, 1954, 1952, 1951, 1950, 1949, 1948, 1947, 1946, 1945, 1944, 1942, 1940, 1939, 1938, 1937, 1936, 1935, 1934, 1933, 1932, 1931, 1930, 1929, 1928, 1927, 1926, 1925, 1924, 1923, 1921, 1920 |
| 945 AIR WAY | 2008, 2006, 2004, 2003, 2001, 2000, 1999, 1996, 1995, 1992, 1991, 1990, 1986, 1985, 1981, 1980, 1976, 1975, 1972, 1971, 1970, 1969, 1967, 1966, 1965, 1964, 1963, 1962, 1961, 1960, 1958, 1957, 1956, 1955, 1954, 1952, 1951, 1950, 1949, 1948, 1947, 1946, 1945, 1944, 1942, 1940, 1939, 1938, 1937, 1936, 1935, 1934, 1933, 1932, 1931, 1930, 1929, 1928, 1927, 1926, 1925, 1924, 1923, 1921, 1920 |
| 948 ZOOK DR | 2013, 2008, 2004, 2003, 2000, 1999, 1996, 1992, 1990, 1986, 1981, 1976, 1971, 1969, 1966, 1965, 1964, 1963, 1961, 1958, 1957, 1954, 1952, 1951, 1949, 1948, 1947, 1946, 1945, 1944, 1942, 1940, 1939, 1938, 1937, 1936, 1935, 1934, 1933, 1932, 1931, 1930, 1929, 1928, 1927, 1926, 1925, 1924, 1923, 1921, 1920 |
| 948 ZOOK DR W | 2013, 2008, 2006, 2004, 2003, 2001, 2000, 1999, 1996, 1995, 1992, 1991, 1990, 1986, 1985, 1981, 1980, 1976, 1975, 1972, 1971, 1970, 1969, 1967, 1966, 1965, 1964, 1963, 1962, 1961, 1960, 1958, 1957, 1956, 1955, 1954, 1952, 1951, 1950, 1949, 1948, 1947, 1946, 1944, 1942, 1939, 1938, 1937, 1936, 1935, 1934, 1933, 1932, 1931, 1930, 1929, 1928, 1927, 1926, 1925, 1924, 1923, 1921, 1920 |
| 951 AIR WAY | 2013, 2008, 2006, 2004, 2003, 2001, 2000, 1999, 1996, 1992, 1990, 1986, 1981, 1980, 1976, 1975, 1972, 1971, 1970, 1969, 1967, 1966, 1965, 1964, 1963, 1962, 1961, 1960, 1958, 1957, 1956, 1955, 1954, 1952, 1951, 1950, 1949, 1948, 1947, 1946, 1945, 1944, 1942, 1940, 1939, 1938, 1937, 1936, 1935, 1934, 1933, 1932, 1931, 1930, 1929, 1928, 1927, 1926, 1925, 1924, 1923, 1921, 1920 |

# FINDINGS

| Address Researched | Address Not Identified in Research Source |
| --- | --- |
| 951 AIR WAY | 2006, 2004, 2003, 2001, 2000, 1999, 1996, 1995, 1992, 1991, 1990, 1986, 1985, 1981, 1980, 1976, 1975, 1972, 1971, 1970, 1969, 1967, 1966, 1965, 1964, 1963, 1962, 1961, 1960, 1958, 1957, 1956, 1955, 1954, 1952, 1951, 1950, 1949, 1948, 1947, 1946, 1945, 1944, 1942, 1940, 1939, 1938, 1937, 1936, 1935, 1934, 1933, 1932, 1931, 1930, 1929, 1928, 1927, 1926, 1925, 1924, 1923, 1921, 1920 |

**Grayson Power Plant**
800 Air Way
Glendale, CA 91201

Inquiry Number: 4433851.9
October 13, 2015

# The EDR Aerial Photo Decade Package

6 Armstrong Road, 4th Floor
Shelton, Connecticut 06484
Toll Free: 800.352.0050
www.edrnet.com

# EDR Aerial Photo Decade Package

Environmental Data Resources, Inc. (EDR) Aerial Photo Decade Package is a screening tool designed to assist environmental professionals in evaluating potential liability on a target property resulting from past activities. EDR's professional researchers provide digitally reproduced historical aerial photographs, and when available, provide one photo per decade.

**When delivered electronically by EDR, the aerial photo images included with this report are for ONE TIME USE ONLY. Further reproduction of these aerial photo images is prohibited without permission from EDR. For more information contact your EDR Account Executive.**

***Thank you for your business.***
Please contact EDR at 1-800-352-0050
with any questions or comments.


**Disclaimer - Copyright and Trademark Notice**

This Report contains certain information obtained from a variety of public and other sources reasonably available to Environmental Data Resources, Inc. It cannot be concluded from this Report that coverage information for the target and surrounding properties does not exist from other sources. **NO WARRANTY EXPRESSED OR IMPLIED, IS MADE WHATSOEVER IN CONNECTION WITH THIS REPORT. ENVIRONMENTAL DATA RESOURCES, INC. SPECIFICALLY DISCLAIMS THE MAKING OF ANY SUCH WARRANTIES, INCLUDING WITHOUT LIMITATION, MERCHANTABILITY OR FITNESS FOR A PARTICULAR USE OR PURPOSE. ALL RISK IS ASSUMED BY THE USER. IN NO EVENT SHALL ENVIRONMENTAL DATA RESOURCES, INC. BE LIABLE TO ANYONE, WHETHER ARISING OUT OF ERRORS OR OMISSIONS, NEGLIGENCE, ACCIDENT OR ANY OTHER CAUSE, FOR ANY LOSS OF DAMAGE, INCLUDING, WITHOUT LIMITATION, SPECIAL, INCIDENTAL, CONSEQUENTIAL, OR EXEMPLARY DAMAGES. ANY LIABILITY ON THE PART OF ENVIRONMENTAL DATA RESOURCES, INC. IS STRICTLY LIMITED TO A REFUND OF THE AMOUNT PAID FOR THIS REPORT.** Purchaser accepts this Report AS IS. Any analyses, estimates, ratings, environmental risk levels or risk codes provided in this Report are provided for illustrative purposes only, and are not intended to provide, nor should they be interpreted as providing any facts regarding, or prediction or forecast of, any environmental risk for any property. Only a Phase I Environmental Site Assessment performed by an environmental professional can provide information regarding the environmental risk for any property. Additionally, the information provided in this Report is not to be construed as legal advice.

Copyright 2015 by Environmental Data Resources, Inc. All rights reserved. Reproduction in any media or format, in whole or in part, of any report or map of Environmental Data Resources, Inc., or its affiliates, is prohibited without prior written permission.

EDR and its logos (including Sanborn and Sanborn Map) are trademarks of Environmental Data Resources, Inc. or its affiliates. All other trademarks used herein are the property of their respective owners.

## Date EDR Searched Historical Sources:

Aerial Photography October 13, 2015

## Target Property:

800 Air Way

Glendale, CA 91201

| ***Year*** | ***Scale*** | ***Details*** | ***Source*** |
|---|---|---|---|
| 1928 | Aerial Photograph. Scale: 1"=500' | Flight Year: 1928 | USGS |
| 1938 | Aerial Photograph. Scale: 1"=500' | Flight Year: 1938 | USGS |
| 1940 | Aerial Photograph. Scale: 1"=500' | Flight Year: 1940 | Fairchild |
| 1952 | Aerial Photograph. Scale: 1"=500' | Flight Year: 1952 | USGS |
| 1964 | Aerial Photograph. Scale: 1"=500' | Flight Year: 1964 | USGS |
| 1977 | Aerial Photograph. Scale: 1"=500' | Flight Year: 1977 | EDR Proprietary Brewster Pacific |
| 1979 | Aerial Photograph. Scale: 1"=500' | Flight Year: 1979 | EDR Proprietary Brewster Pacific |
| 1981 | Aerial Photograph. Scale: 1"=500' | Flight Year: 1981 | EDR Proprietary Brewster Pacific |
| 1989 | Aerial Photograph. Scale: 1"=500' | Flight Year: 1989 | USGS |
| 1994 | Aerial Photograph. Scale: 1"=500' | /DOQQ - acquisition dates: 1994 | USGS/DOQQ |
| 2002 | Aerial Photograph. Scale: 1"=500' | Flight Year: 2002 | USGS |
| 2005 | Aerial Photograph. Scale: 1"=500' | Flight Year: 2005 | USDA/NAIP |
| 2009 | Aerial Photograph. Scale: 1"=500' | Flight Year: 2009 | USDA/NAIP |
| 2010 | Aerial Photograph. Scale: 1"=500' | Flight Year: 2010 | USDA/NAIP |
| 2012 | Aerial Photograph. Scale: 1"=500' | Flight Year: 2012 | USDA/NAIP |

INQUIRY #: 4433851.9
YEAR: 1928
= 500'
N
EDR

INQUIRY #: 4433851.9
YEAR: 1938
= 500'
N
EDR

INQUIRY #: 4433851.9
YEAR: 1940
= 500'
N
EDR

INQUIRY #: 4433851.9
YEAR: 1952
= 500'
N
EDR

INQUIRY #: 4433851.9
YEAR: 1964
= 500'
N
EDR

INQUIRY #: 4433851.9
YEAR: 1977
= 500'
N
EDR

INQUIRY #: 4433851.9
YEAR: 1979
= 500'
N
EDR

INQUIRY #: 4433851.9
YEAR: 1981
= 500'
N
EDR

INQUIRY #: 4433851.9
YEAR: 1989
= 500'
N
EDR

INQUIRY #: 4433851.9
YEAR: 1994
= 500'
N
EDR

INQUIRY #: 4433851.9
YEAR: 2002
= 500'
N
EDR

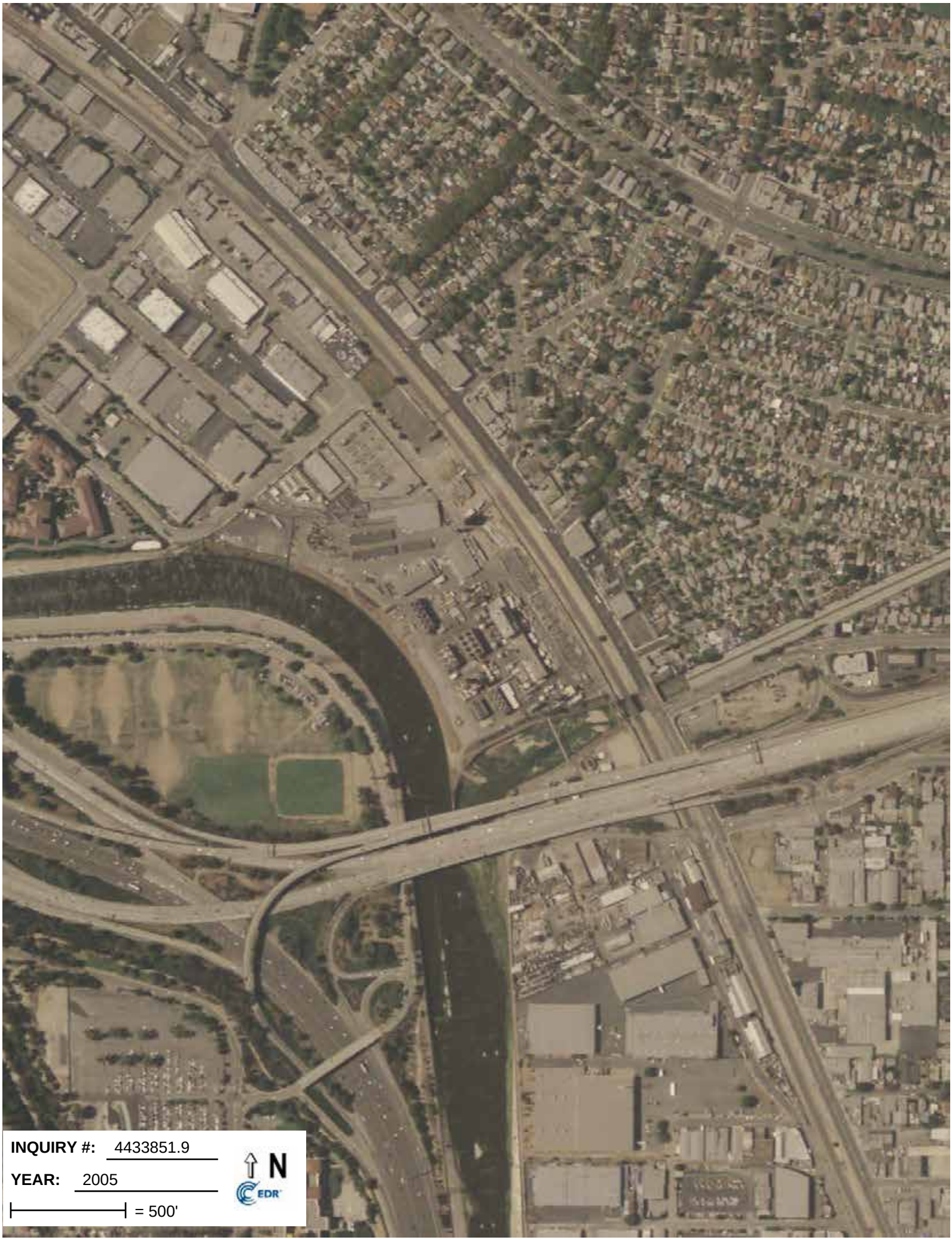
INQUIRY #: 4433851.9
YEAR: 2005
= 500'
N
EDR

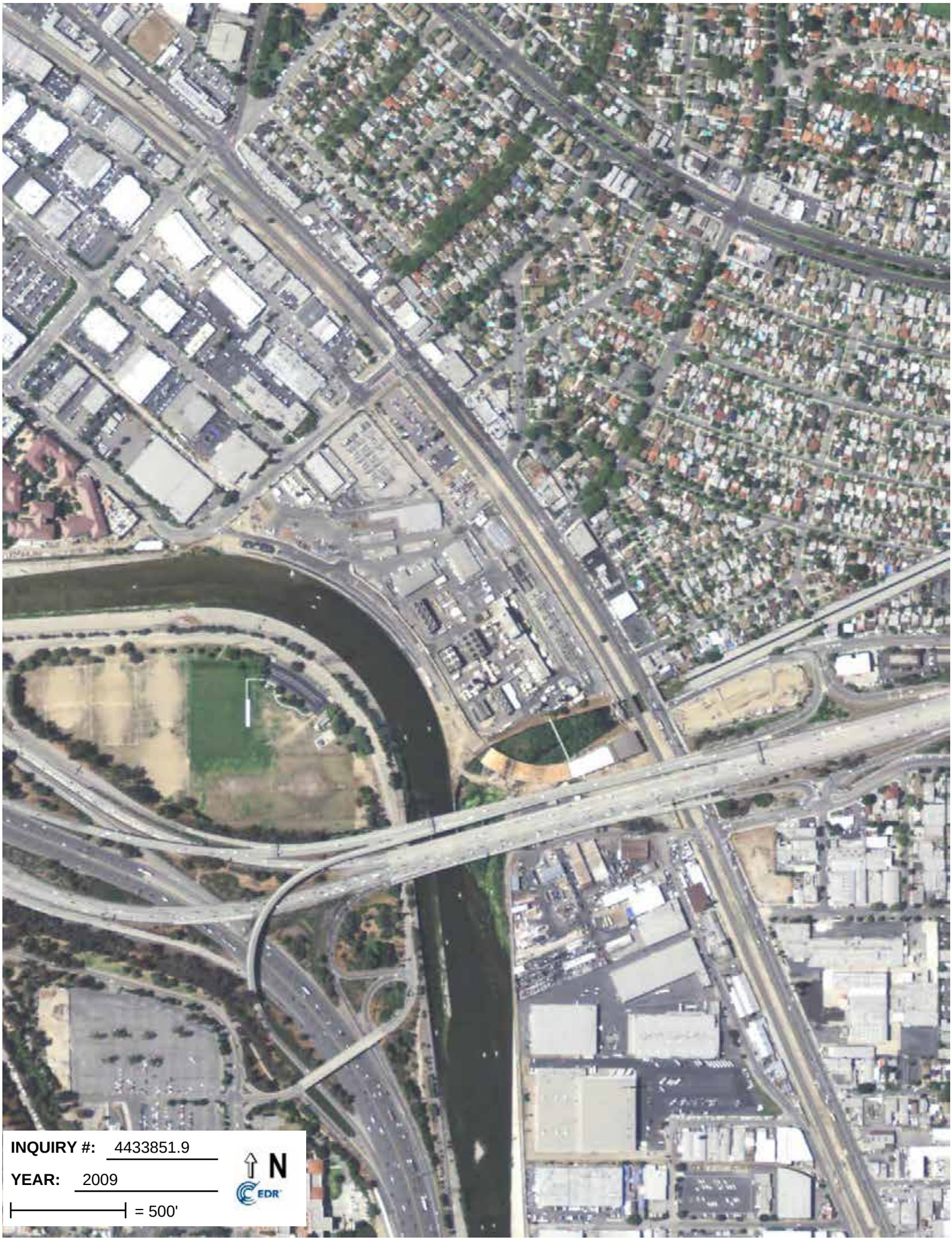
INQUIRY #: 4433851.9
YEAR: 2009
= 500'
N
EDR

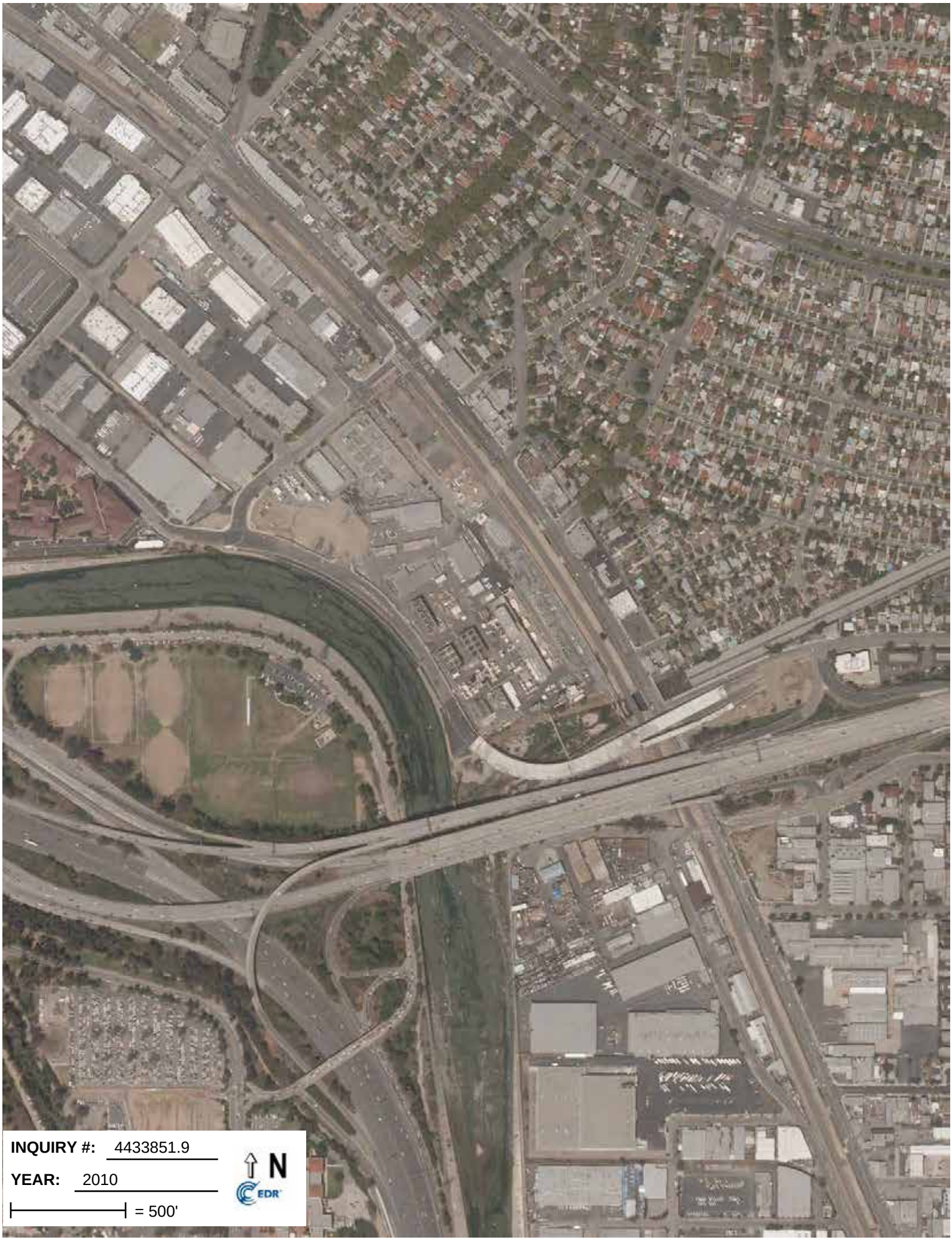
INQUIRY #: 4433851.9
YEAR: 2010
= 500'
N
EDR

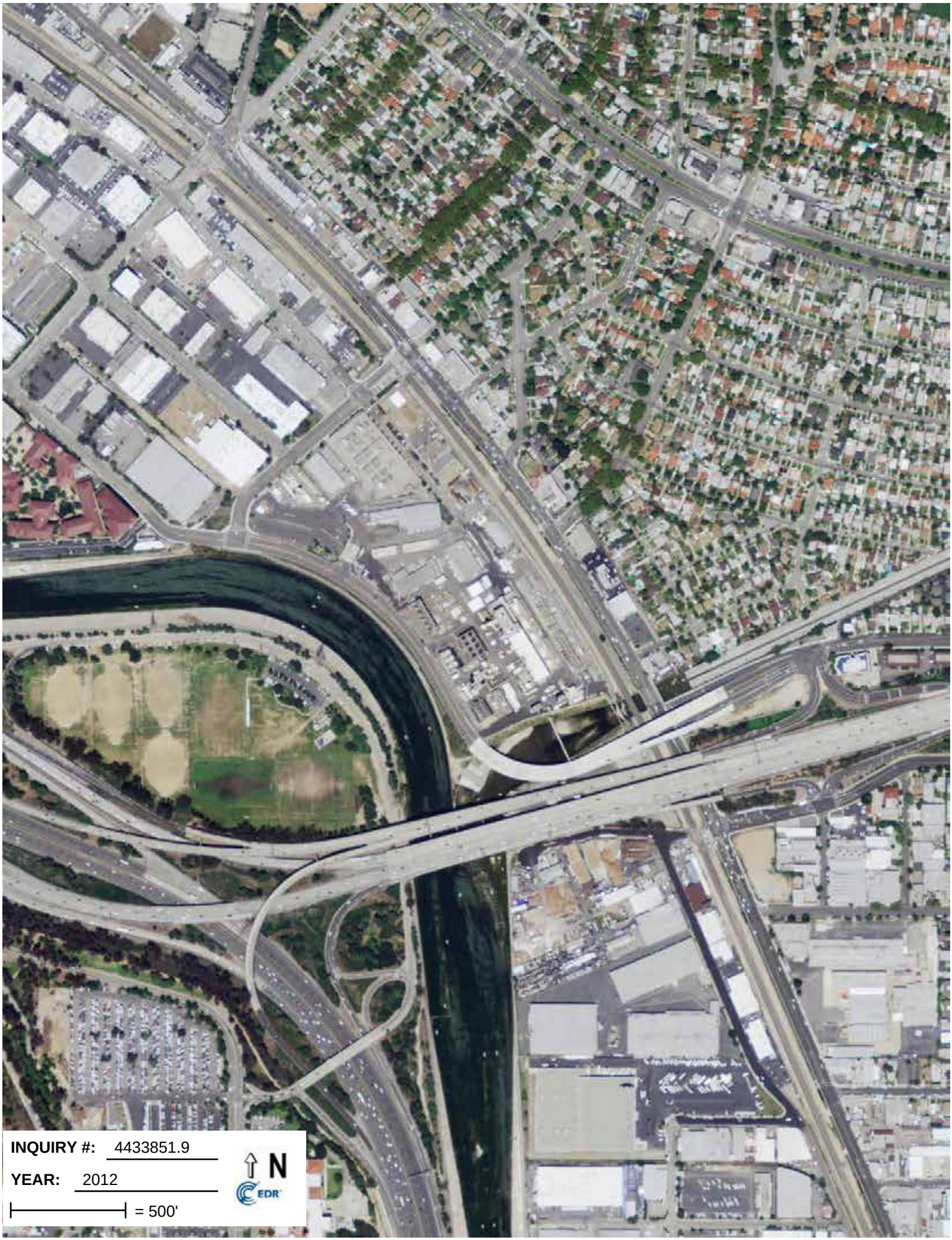
INQUIRY #: 4433851.9
YEAR: 2012
= 500'
N
EDR

**Grayson Power Plant**
800 Air Way
Glendale, CA 91201

Inquiry Number: 4433851.4
October 09, 2015

# EDR Historical Topographic Map Report

6 Armstrong Road, 4th Floor
Shelton, Connecticut 06484
Toll Free: 800.352.0050
www.edrnet.com

# EDR Historical Topographic Map Report

Environmental Data Resources, Inc.s (EDR) Historical Topographic Map Report is designed to assist professionals in evaluating potential liability on a target property resulting from past activities. EDRs Historical Topographic Map Report includes a search of a collection of public and private color historical topographic maps, dating back to the early 1900s.

***Thank you for your business.***
Please contact EDR at 1-800-352-0050
with any questions or comments.


**Disclaimer - Copyright and Trademark Notice**

This Report contains certain information obtained from a variety of public and other sources reasonably available to Environmental Data Resources, Inc. It cannot be concluded from this Report that coverage information for the target and surrounding properties does not exist from other sources. **NO WARRANTY EXPRESSED OR IMPLIED, IS MADE WHATSOEVER IN CONNECTION WITH THIS REPORT. ENVIRONMENTAL DATA RESOURCES, INC. SPECIFICALLY DISCLAIMS THE MAKING OF ANY SUCH WARRANTIES, INCLUDING WITHOUT LIMITATION, MERCHANTABILITY OR FITNESS FOR A PARTICULAR USE OR PURPOSE. ALL RISK IS ASSUMED BY THE USER. IN NO EVENT SHALL ENVIRONMENTAL DATA RESOURCES, INC. BE LIABLE TO ANYONE, WHETHER ARISING OUT OF ERRORS OR OMISSIONS, NEGLIGENCE, ACCIDENT OR ANY OTHER CAUSE, FOR ANY LOSS OF DAMAGE, INCLUDING, WITHOUT LIMITATION, SPECIAL, INCIDENTAL, CONSEQUENTIAL, OR EXEMPLARY DAMAGES. ANY LIABILITY ON THE PART OF ENVIRONMENTAL DATA RESOURCES, INC. IS STRICTLY LIMITED TO A REFUND OF THE AMOUNT PAID FOR THIS REPORT.** Purchaser accepts this Report AS IS. Any analyses, estimates, ratings, environmental risk levels or risk codes provided in this Report are provided for illustrative purposes only, and are not intended to provide, nor should they be interpreted as providing any facts regarding, or prediction or forecast of, any environmental risk for any property. Only a Phase I Environmental Site Assessment performed by an environmental professional can provide information regarding the environmental risk for any property. Additionally, the information provided in this Report is not to be construed as legal advice.

Copyright 2015 by Environmental Data Resources, Inc. All rights reserved. Reproduction in any media or format, in whole or in part, of any report or map of Environmental Data Resources, Inc., or its affiliates, is prohibited without prior written permission.

EDR and its logos (including Sanborn and Sanborn Map) are trademarks of Environmental Data Resources, Inc. or its affiliates. All other trademarks used herein are the property of their respective owners.

# Historical Topographic Map

| | | | |
|---|---|---|---|
| N | TARGET QUAD<br>NAME: SANTA MONICA<br>MAP YEAR: 1896<br><br>SERIES: 15<br>SCALE: 1:62500 | SITE NAME: Grayson Power Plant<br>ADDRESS: 800 Air Way<br>Glendale, CA 91201<br>LAT/LONG: 34.1558 / -118.2786 | CLIENT: Stantec<br>CONTACT: Anuya Sawant<br>INQUIRY#: 4433851.4<br>RESEARCH DATE: 10/09/2015 |

# Historical Topographic Map

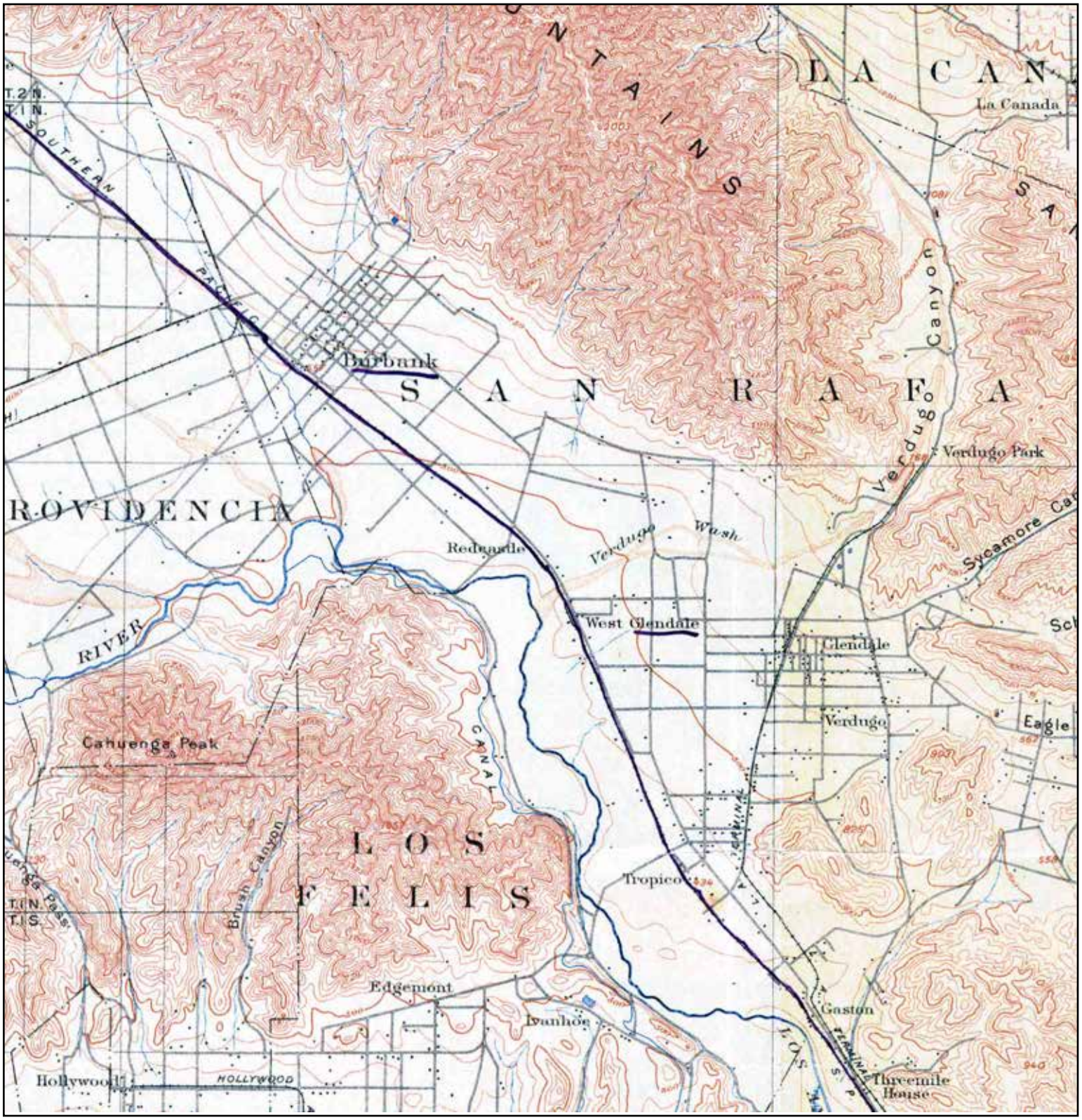


| | | | |
|---|---|---|---|
| N | TARGET QUAD<br>NAME: LOS ANGELES<br>MAP YEAR: 1900<br><br>SERIES: 15<br>SCALE: 1:62500 | SITE NAME: Grayson Power Plant<br>ADDRESS: 800 Air Way<br>Glendale, CA 91201<br>LAT/LONG: 34.1558 / -118.2786 | CLIENT: Stantec<br>CONTACT: Anuya Sawant<br>INQUIRY#: 4433851.4<br>RESEARCH DATE: 10/09/2015 |

# Historical Topographic Map

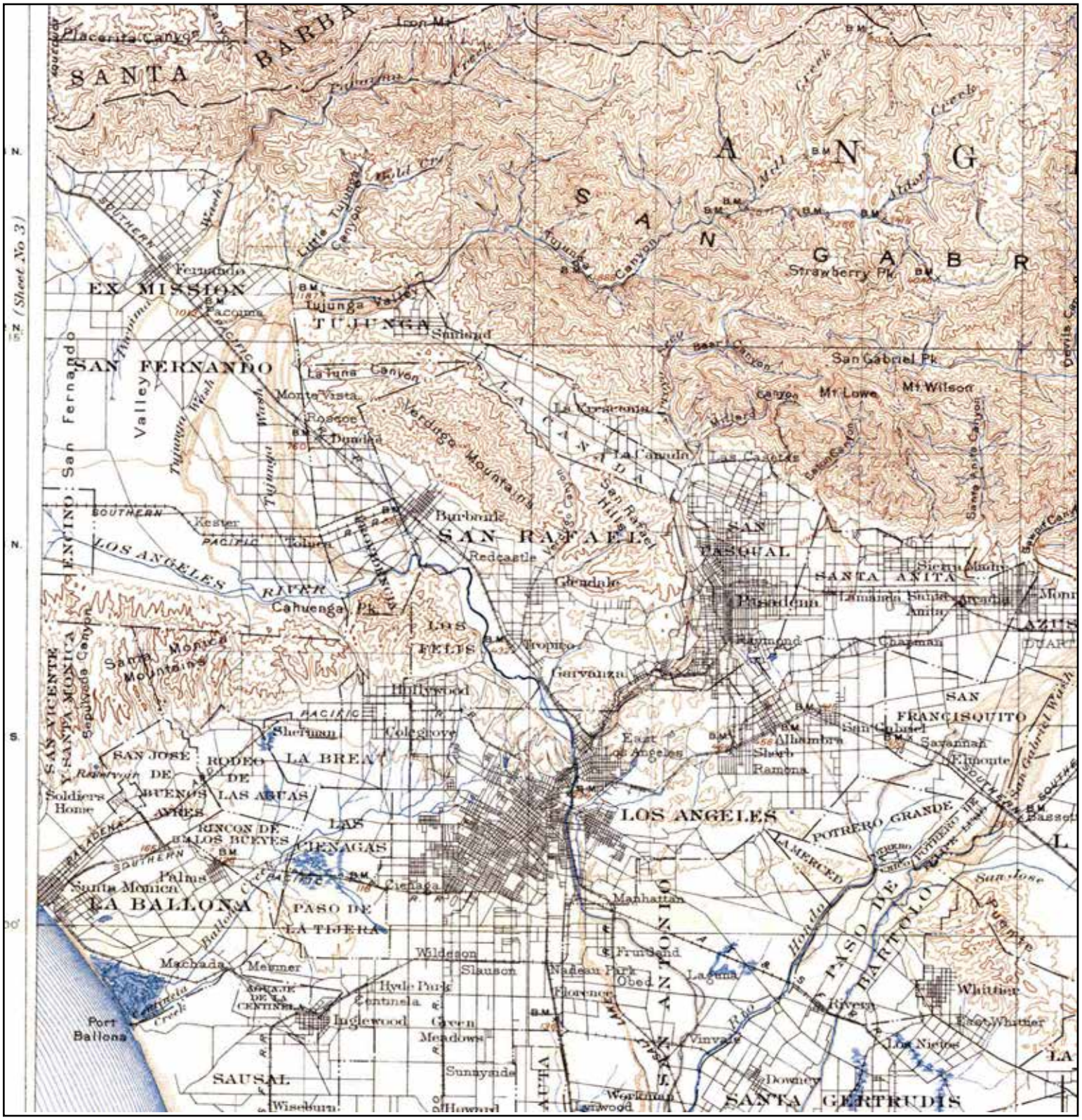


| | | | |
|---|---|---|---|
| N | TARGET QUAD<br>NAME: SOUTHERN CA SHEET 1<br>MAP YEAR: 1901<br><br>SERIES: 60<br>SCALE: 1:250000 | SITE NAME: Grayson Power Plant<br>ADDRESS: 800 Air Way<br>Glendale, CA 91201<br>LAT/LONG: 34.1558 / -118.2786 | CLIENT: Stantec<br>CONTACT: Anuya Sawant<br>INQUIRY#: 4433851.4<br>RESEARCH DATE: 10/09/2015 |

# Historical Topographic Map

| | | | |
|---|---|---|---|
| N | TARGET QUAD<br>NAME: SANTA MONICA<br>MAP YEAR: 1902<br><br>SERIES: 15<br>SCALE: 1:62500 | SITE NAME: Grayson Power Plant<br>ADDRESS: 800 Air Way<br>Glendale, CA 91201<br>LAT/LONG: 34.1558 / -118.2786 | CLIENT: Stantec<br>CONTACT: Anuya Sawant<br>INQUIRY#: 4433851.4<br>RESEARCH DATE: 10/09/2015 |

# Historical Topographic Map

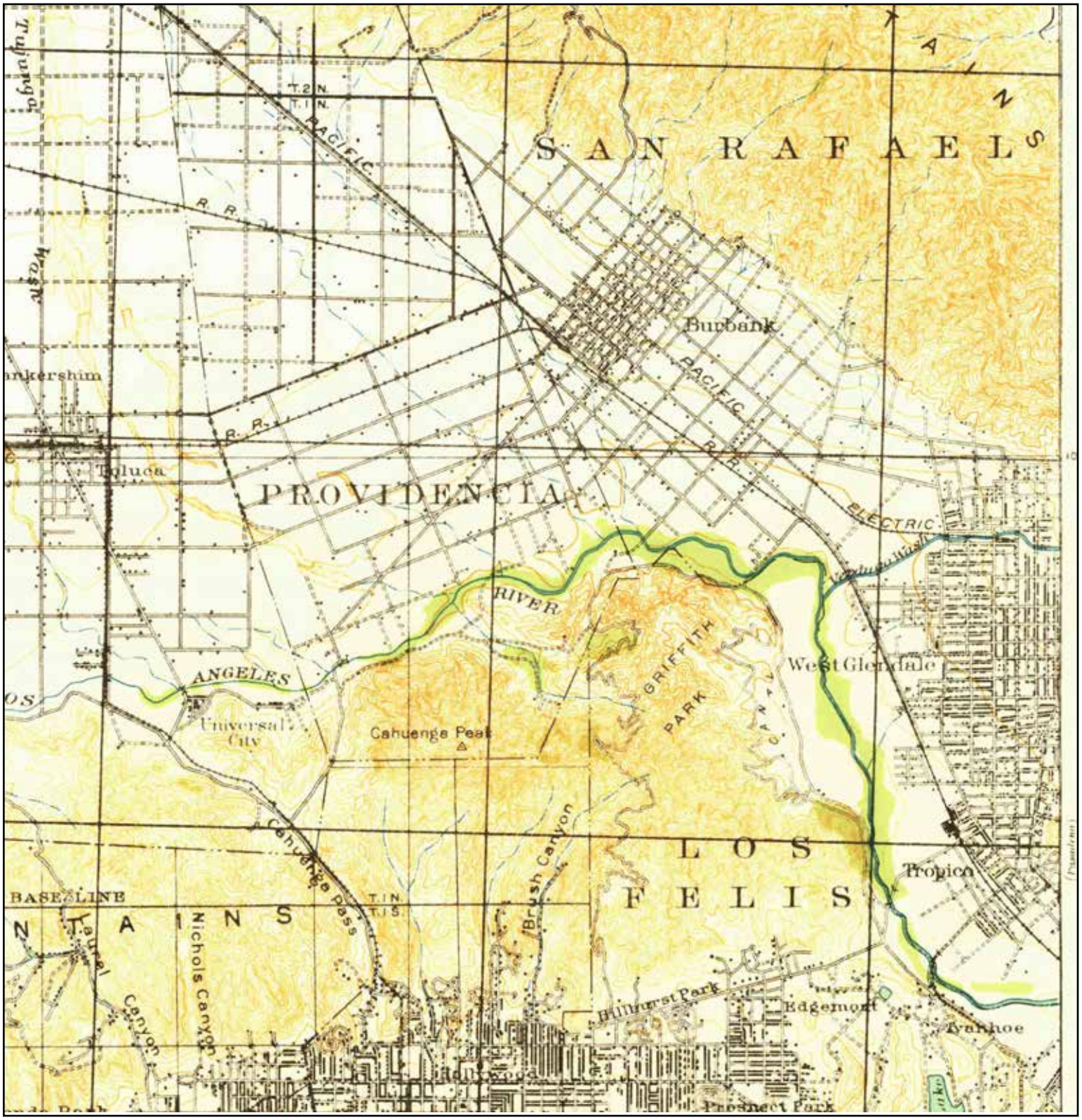


| | | | |
|---|---|---|---|
| N | TARGET QUAD<br>NAME: SANTA MONICA<br>MAP YEAR: 1920<br><br>SERIES: 15<br>SCALE: 1:62500 | SITE NAME: Grayson Power Plant<br>ADDRESS: 800 Air Way<br>Glendale, CA 91201<br>LAT/LONG: 34.1558 / -118.2786 | CLIENT: Stantec<br>CONTACT: Anuya Sawant<br>INQUIRY#: 4433851.4<br>RESEARCH DATE: 10/09/2015 |

# Historical Topographic Map

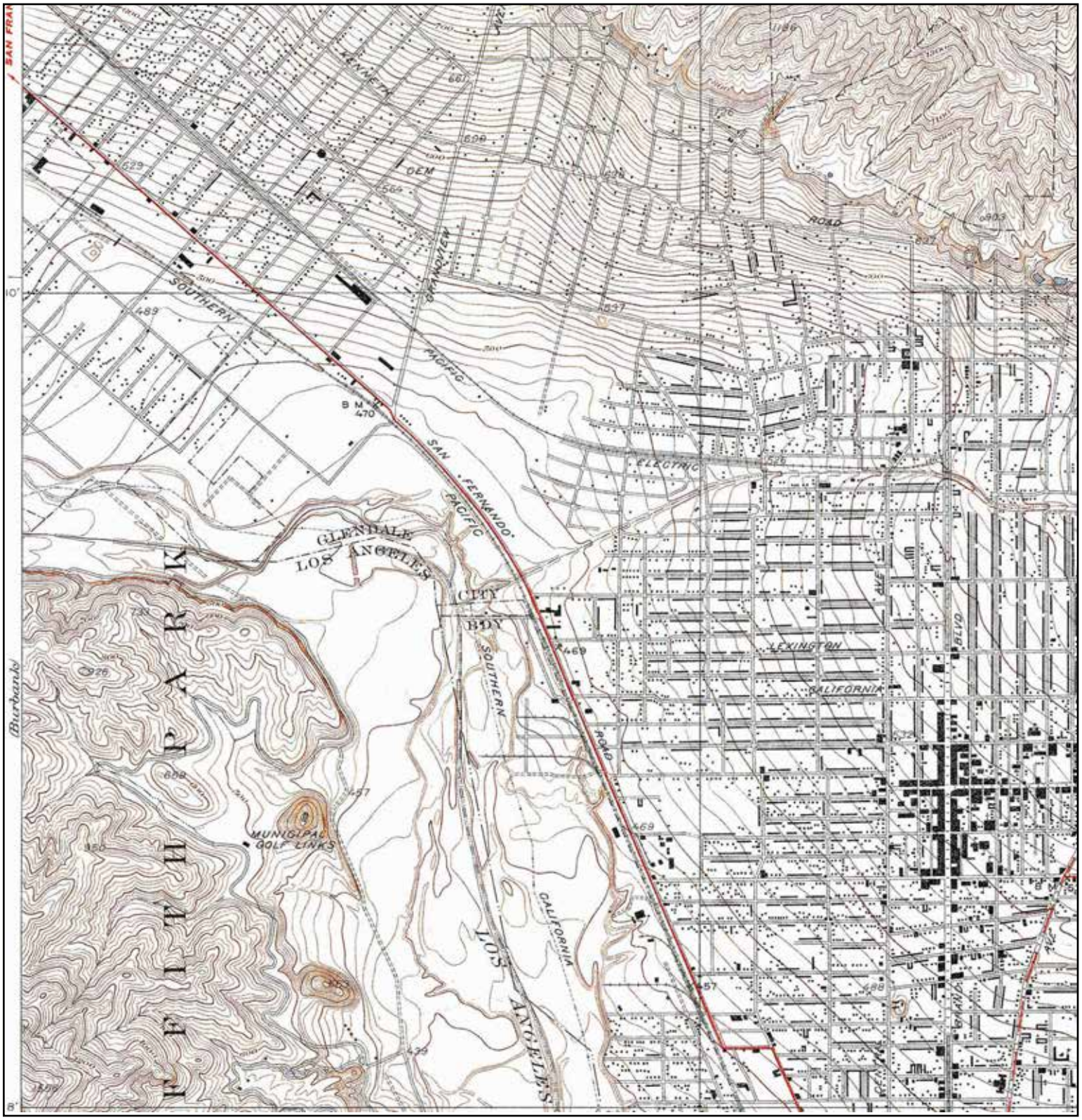


| | | | |
|---|---|---|---|
| N | TARGET QUAD<br>NAME: GLENDALE<br>MAP YEAR: 1928<br><br>SERIES: 6<br>SCALE: 1:24000 | SITE NAME: Grayson Power Plant<br>ADDRESS: 800 Air Way<br>Glendale, CA 91201<br>LAT/LONG: 34.1558 / -118.2786 | CLIENT: Stantec<br>CONTACT: Anuya Sawant<br>INQUIRY#: 4433851.4<br>RESEARCH DATE: 10/09/2015 |

# Historical Topographic Map

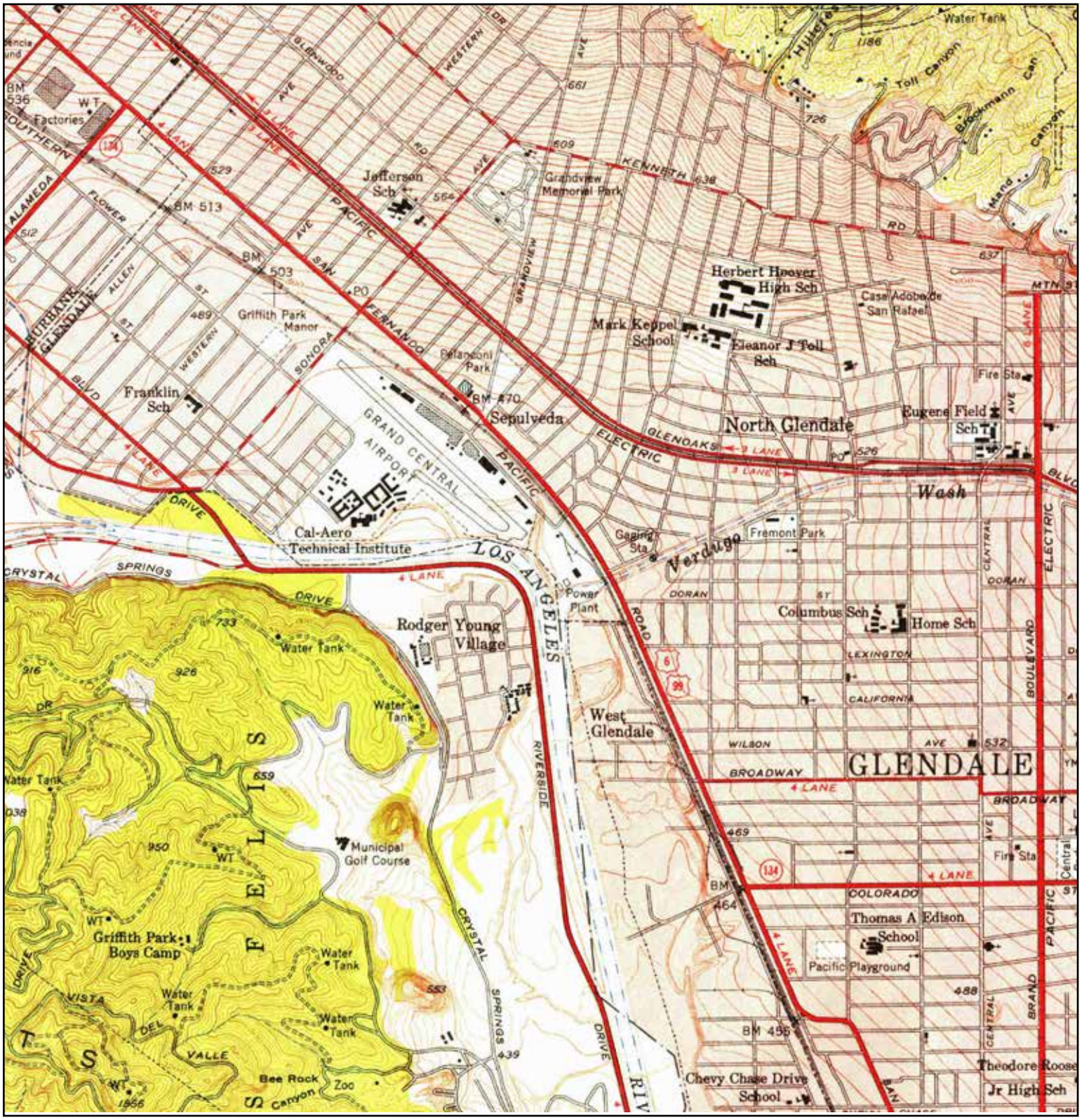


| | | | |
|---|---|---|---|
| N | TARGET QUAD<br>NAME: BURBANK<br>MAP YEAR: 1953<br><br>SERIES: 7.5<br>SCALE: 1:24000 | SITE NAME: Grayson Power Plant<br>ADDRESS: 800 Air Way<br>Glendale, CA 91201<br>LAT/LONG: 34.1558 / -118.2786 | CLIENT: Stantec<br>CONTACT: Anuya Sawant<br>INQUIRY#: 4433851.4<br>RESEARCH DATE: 10/09/2015 |

# Historical Topographic Map

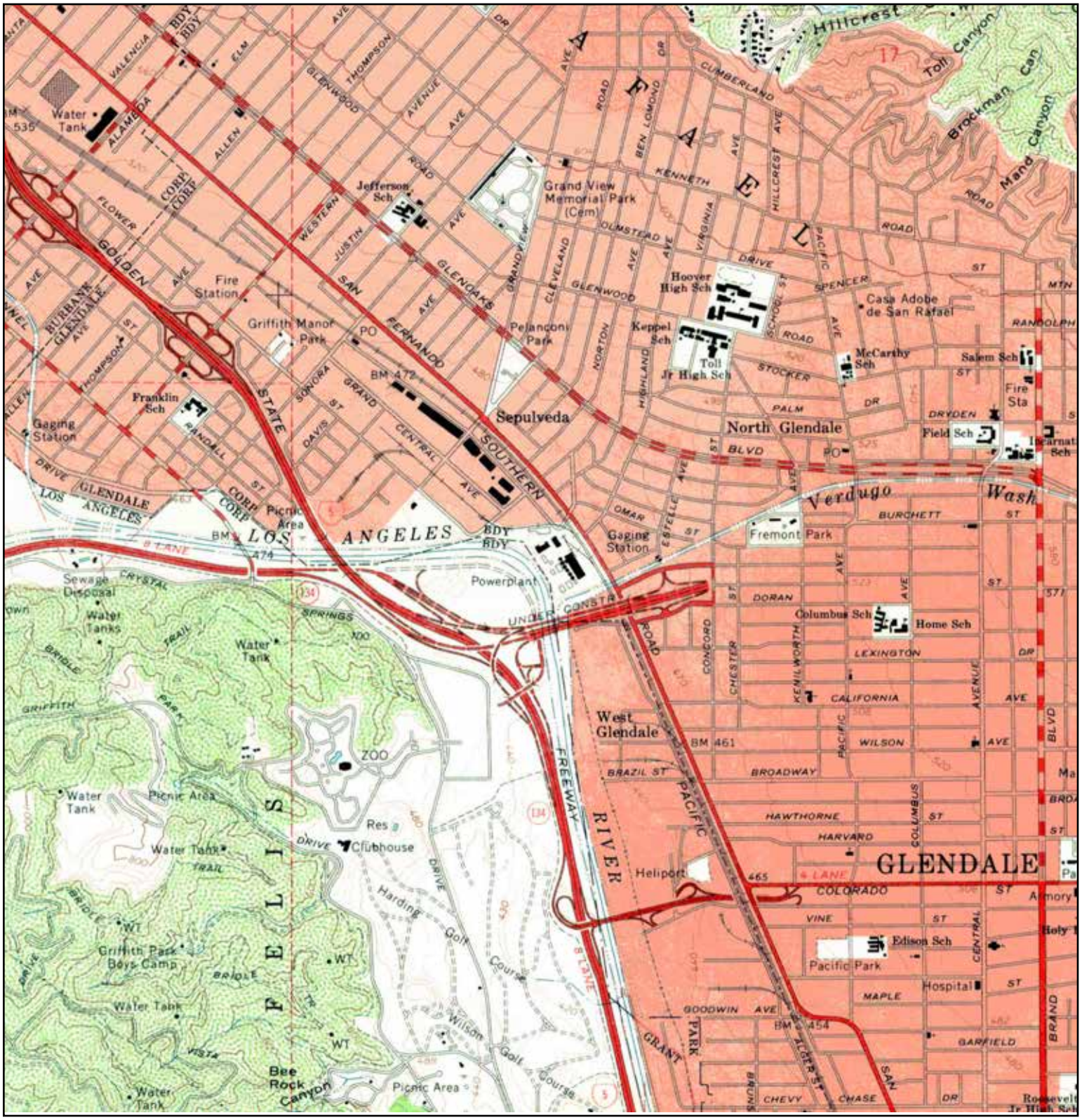


| | | | |
|---|---|---|---|
| N | TARGET QUAD<br>NAME: BURBANK<br>MAP YEAR: 1966<br><br>SERIES: 7.5<br>SCALE: 1:24000 | SITE NAME: Grayson Power Plant<br>ADDRESS: 800 Air Way<br>Glendale, CA 91201<br>LAT/LONG: 34.1558 / -118.2786 | CLIENT: Stantec<br>CONTACT: Anuya Sawant<br>INQUIRY#: 4433851.4<br>RESEARCH DATE: 10/09/2015 |

# Historical Topographic Map

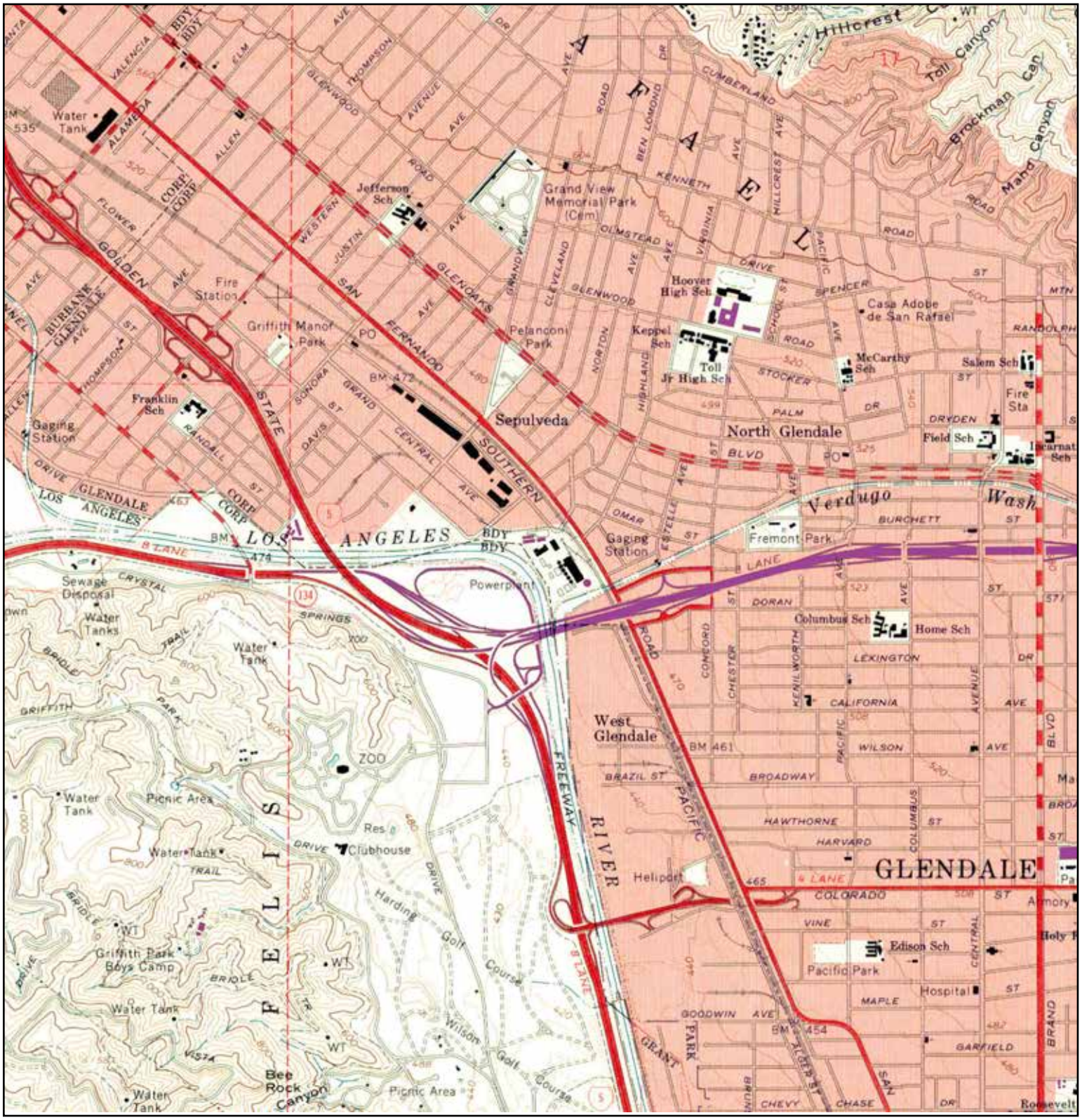


| | | | |
|---|---|---|---|
| N | TARGET QUAD<br>NAME: BURBANK<br>MAP YEAR: 1972<br>PHOTOREVISED FROM :1966<br>SERIES: 7.5<br>SCALE: 1:24000 | SITE NAME: Grayson Power Plant<br>ADDRESS: 800 Air Way<br>Glendale, CA 91201<br>LAT/LONG: 34.1558 / -118.2786 | CLIENT: Stantec<br>CONTACT: Anuya Sawant<br>INQUIRY#: 4433851.4<br>RESEARCH DATE: 10/09/2015 |

# Historical Topographic Map

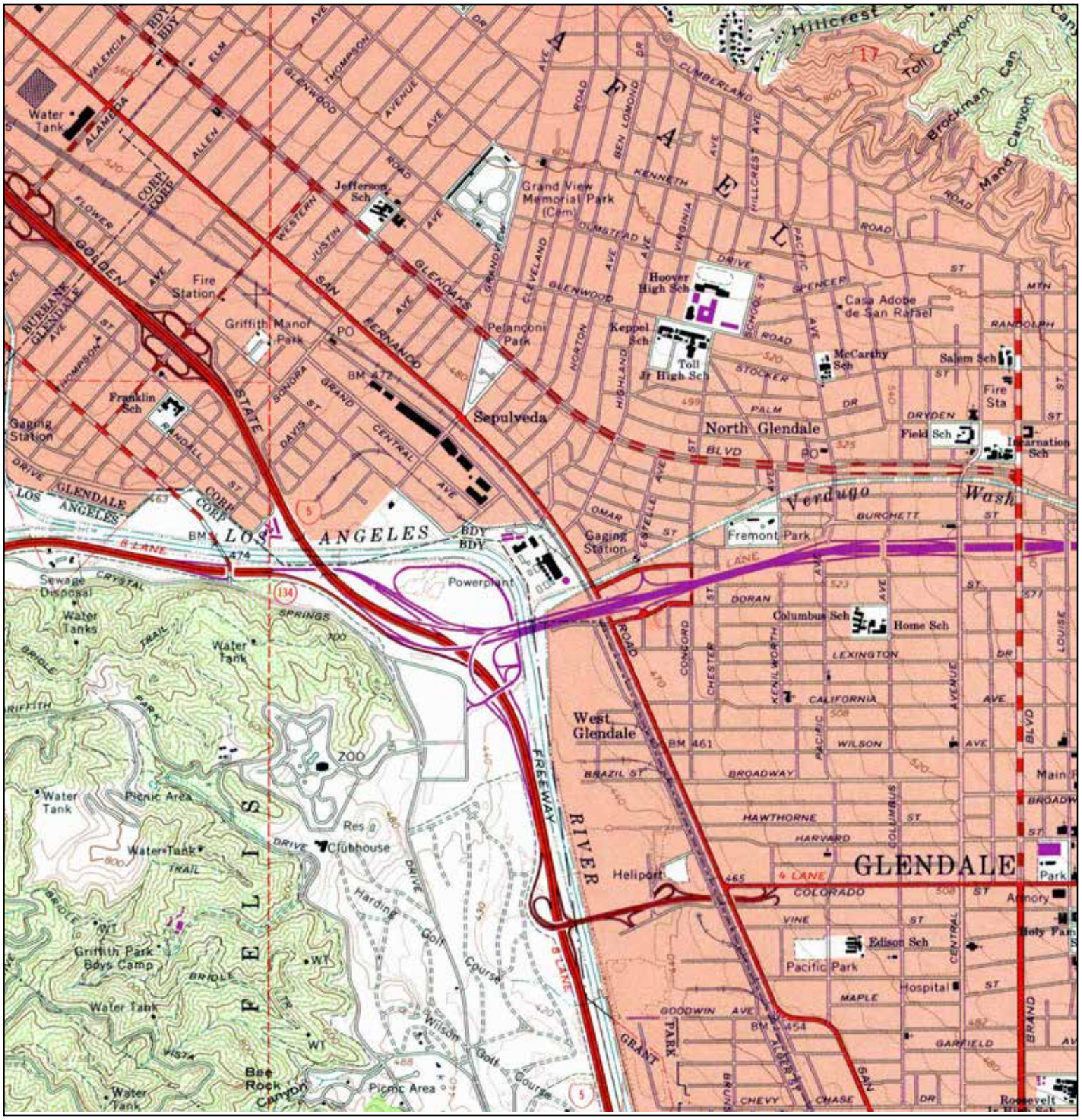


| | | | |
|---|---|---|---|
| N | TARGET QUAD<br>NAME: BURBANK<br>MAP YEAR: 1994<br>REVISED FROM :1966<br>SERIES: 7.5<br>SCALE: 1:24000 | SITE NAME: Grayson Power Plant<br>ADDRESS: 800 Air Way<br>Glendale, CA 91201<br>LAT/LONG: 34.1558 / -118.2786 | CLIENT: Stantec<br>CONTACT: Anuya Sawant<br>INQUIRY#: 4433851.4<br>RESEARCH DATE: 10/09/2015 |

**Grayson Power Plant**
800 Air Way
Glendale, CA 91201

Inquiry Number: 4433851.3
October 09, 2015

# Certified Sanborn® Map Report

6 Armstrong Road, 4th Floor
Shelton, Connecticut 06484
Toll Free: 800.352.0050
www.edrnet.com

# Certified Sanborn® Map Report

10/09/15

**Site Name:**
Grayson Power Plant
800 Air Way
Glendale, CA 91201

**Client Name:**
Stantec
290 Conejo Ridge Avenue
Thousand Oaks, CA 91361

EDR Inquiry # 4433851.3

Contact: Anuya Sawant

The Sanborn Library has been searched by EDR and maps covering the target property location as provided by Stantec were identified for the years listed below. The Sanborn Library is the largest, most complete collection of fire insurance maps. The collection includes maps from Sanborn, Bromley, Perris & Browne, Hopkins, Barlow, and others. Only Environmental Data Resources Inc. (EDR) is authorized to grant rights for commercial reproduction of maps by the Sanborn Library LLC, the copyright holder for the collection. Results can be authenticated by visiting www.edrnet.com/sanborn.

The Sanborn Library is continually enhanced with newly identified map archives. This report accesses all maps in the collection as of the day this report was generated.

## *Certified Sanborn Results:*

**Site Name:** Grayson Power Plant
**Address:** 800 Air Way
**City, State, Zip:** Glendale, CA 91201
**Cross Street:**
**P.O. #** NA
**Project:** 2057123300
**Certification #** 1511-4601-8338

**Maps Provided:**

1965
1950

Sanborn® Library search results
Certification # 1511-4601-8338

The Sanborn Library includes more than 1.2 million fire insurance maps from Sanborn, Bromley, Perris & Browne, Hopkins, Barlow and others which track historical property usage in approximately 12,000 American cities and towns. Collections searched:

- ✔ Library of Congress
- ✔ University Publications of America
- ✔ EDR Private Collection

*The Sanborn Library LLC Since 1866™*

### Limited Permission To Make Copies

Stantec (the client) is permitted to make up to FIVE photocopies of this Sanborn Map transmittal and each fire insurance map accompanying this report solely for the limited use of its customer. No one other than the client is authorized to make copies. Upon request made directly to an EDR Account Executive, the client may be permitted to make a limited number of additional photocopies. This permission is conditioned upon compliance by the client, its customer and their agents with EDR's copyright policy; a copy of which is available upon request.


**Disclaimer - Copyright and Trademark notice**

This Report contains certain information obtained from a variety of public and other sources reasonably available to Environmental Data Resources, Inc. It cannot be concluded from this Report that coverage information for the target and surrounding properties does not exist from other sources. NO WARRANTY EXPRESSED OR IMPLIED, IS MADE WHATSOEVER IN CONNECTION WITH THIS REPORT. ENVIRONMENTAL DATA RESOURCES, INC. SPECIFICALLY DISCLAIMS THE MAKING OF ANY SUCH WARRANTIES, INCLUDING WITHOUT LIMITATION, MERCHANTABILITY OR FITNESS FOR A PARTICULAR USE OR PURPOSE. ALL RISK IS ASSUMED BY THE USER. IN NO EVENT SHALL ENVIRONMENTAL DATA RESOURCES, INC. BE LIABLE TO ANYONE, WHETHER ARISING OUT OF ERRORS OR OMISSIONS, NEGLIGENCE, ACCIDENT OR ANY OTHER CAUSE, FOR ANY LOSS OF DAMAGE, INCLUDING, WITHOUT LIMITATION, SPECIAL, INCIDENTAL CONSEQUENTIAL, OR EXEMPLARY DAMAGES. ANY LIABILITY ON THE PART OF ENVIRONMENTAL DATA RESOURCES, INC. IS STRICTLY LIMITED TO A REFUND OF THE AMOUNT PAID FOR THIS REPORT. Purchaser accepts this Report "AS IS". Any analyses, estimates, ratings, environmental risk levels or risk codes provided in this Report are provided for illustrative purposes only, and are not intended to provide, nor should they be interpreted as providing any facts regarding, or prediction or forecast of, any environmental risk for any property. Only a Phase I Environmental Site Assessment performed by an environmental professional can provide information regarding the environmental risk for any property. Additionally, the information provided in this Report is not to be construed as legal advice.

Copyright 2015 by Environmental Data Resources, Inc. All rights reserved. Reproduction in any media or format, in whole or in part, of any report or map of Environmental Data Resources, Inc., or its affiliates, is prohibited without prior written permission.

EDR and its logos (including Sanborn and Sanborn Map) are trademarks of Environmental Data Resources, Inc. or its affiliates. All other trademarks used herein are the property of their respective owners.

## *Sanborn Sheet Thumbnails*

This Certified Sanborn Map Report is based upon the following Sanborn Fire Insurance map sheets.

**1965 Source Sheets**

Volume 2A, Sheet 299b

Volume 2A, Sheet 299h

**1950 Source Sheets**

Volume 2A, Sheet 299b

Volume 2A, Sheet 299h

Volume 2A, Sheet 299k

# 1965 Certified Sanborn Map

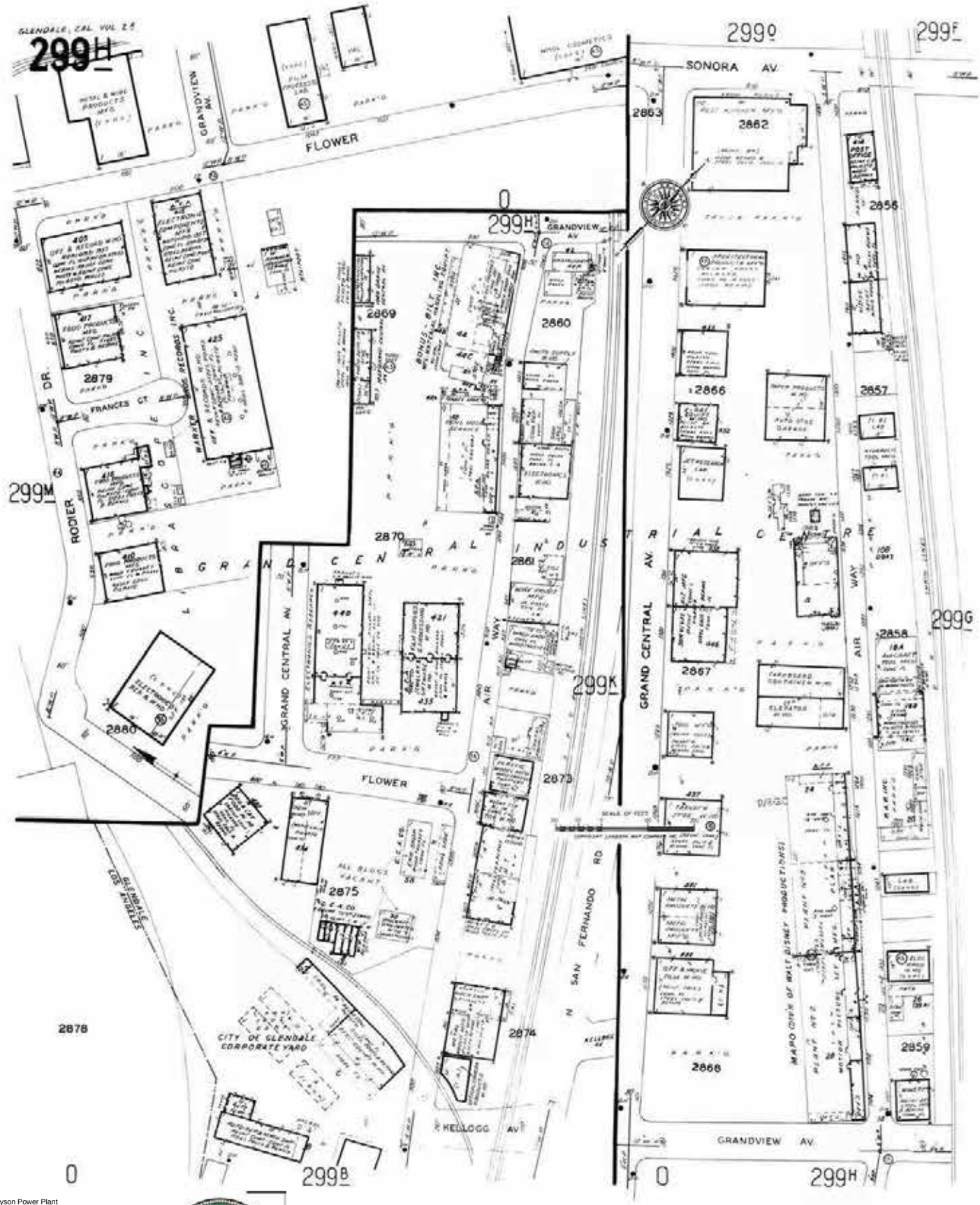


The certified Sanborn Library search results in this report can be authenticated by visiting www.edrnet.com/sanborn and entering the certification number. Only Environmental Data Resources Inc. (EDR) is authorized to grant rights for commercial reproduction of maps by The Sanborn Library LLC, the copyright holder for the collection.

Certification # 1511-4601-8338

| | |
|---|---|
| Site Name: | Grayson Power Plant |
| Address: | 800 Air Way |
| City, ST, ZIP: | Glendale CA 91201 |
| Client: | Stantec |
| EDR Inquiry: | 4433851.3 |
| Order Date: | 10/9/2015 7:08:00 PM |
| Certification # | 1511-4601-8338 |
| Copyright: | 1965 |

# 1965 Certified Sanborn Map

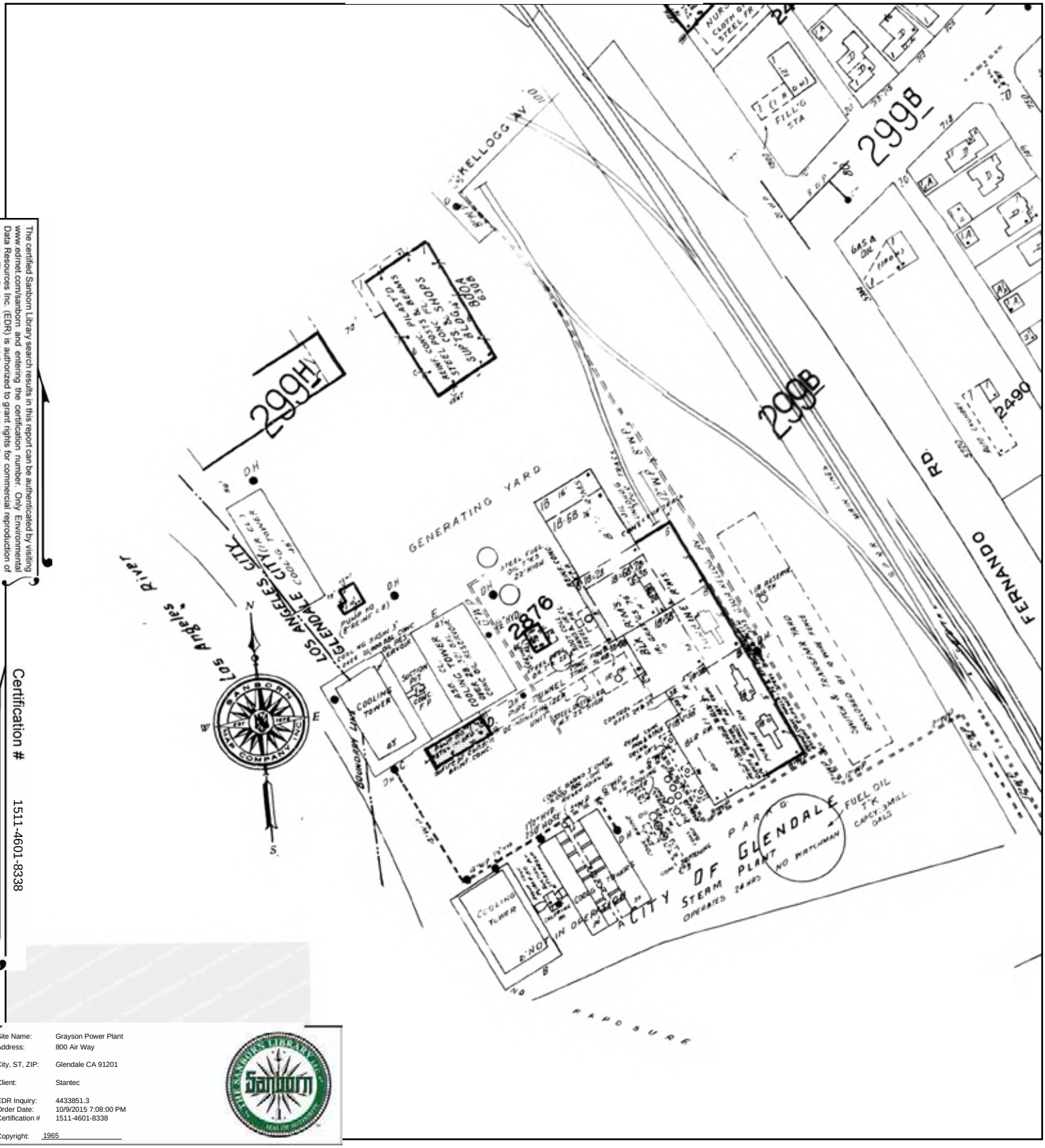


The certified Sanborn Library search results in this report can be authenticated by visiting www.edrnet.com/sanborn and entering the certification number. Only Environmental Data Resources Inc. (EDR) is authorized to grant rights for commercial reproduction of maps by The Sanborn Library LLC, the copyright holder for the collection.

Certification # 1511-4601-8338

| | |
|---|---|
| Site Name: | Grayson Power Plant |
| Address: | 800 Air Way |
| City, ST, ZIP: | Glendale CA 91201 |
| Client: | Stantec |
| EDR Inquiry: | 4433851.3 |
| Order Date: | 10/9/2015 7:08:00 PM |
| Certification # | 1511-4601-8338 |
| Copyright: | 1965 |

This Certified Sanborn Map combines the following sheets.
Outlined areas indicate map sheets within the collection.

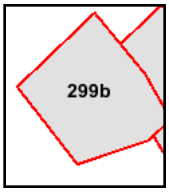


Volume 2A, Sheet 299b
Volume 2A, Sheet 299h

0 Feet 150 300 600

N

# 1950 Certified Sanborn Map

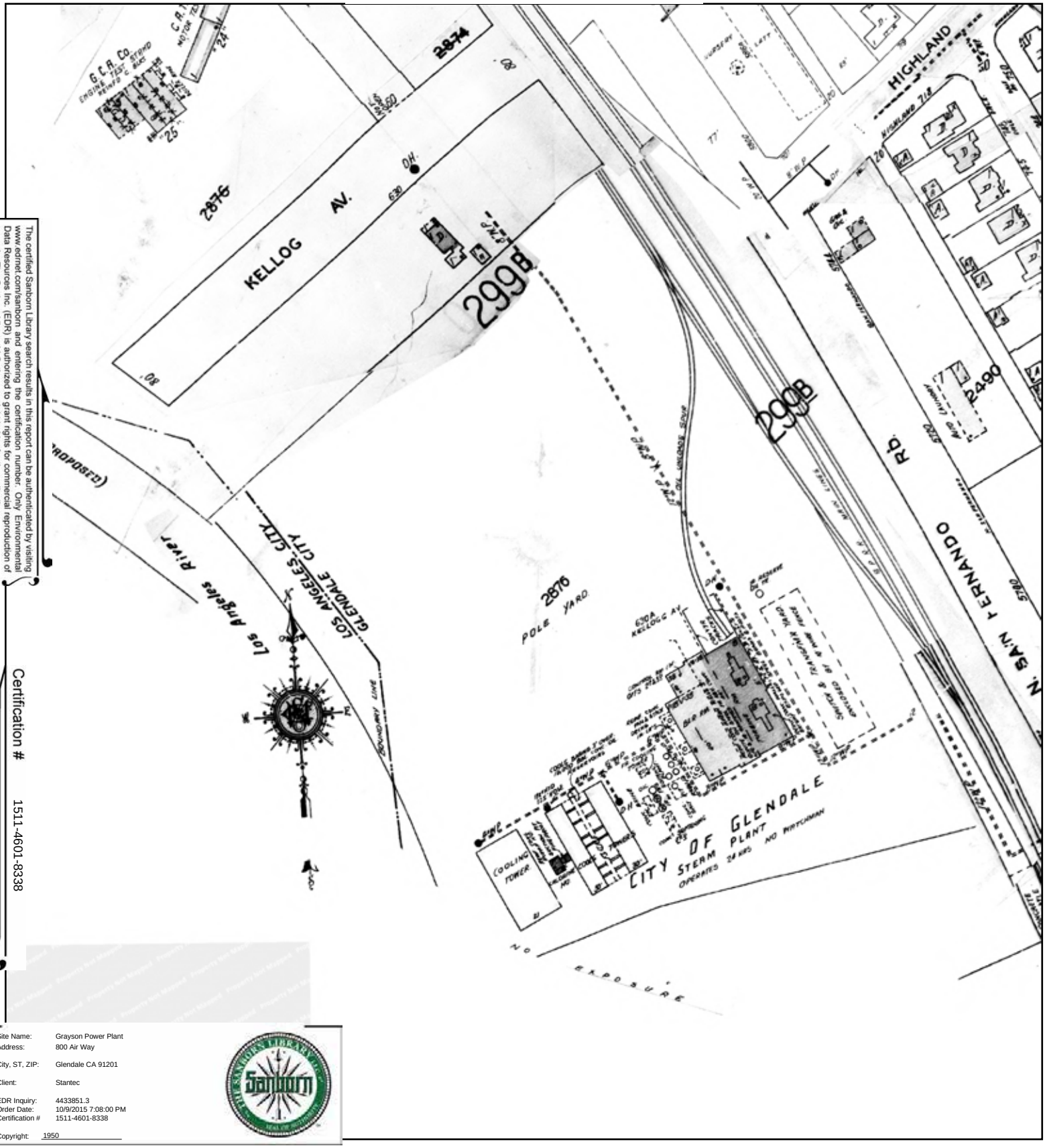


The certified Sanborn Library search results in this report can be authenticated by visiting www.edrnet.com/sanborn and entering the certification number. Only Environmental Data Resources Inc. (EDR) is authorized to grant rights for commercial reproduction of maps by The Sanborn Library LLC, the copyright holder for the collection.

Certification # 1511-4601-8338

| | |
|---|---|
| Site Name: | Grayson Power Plant |
| Address: | 800 Air Way |
| City, ST, ZIP: | Glendale CA 91201 |
| Client: | Stantec |
| EDR Inquiry: | 4433851.3 |
| Order Date: | 10/9/2015 7:08:00 PM |
| Certification # | 1511-4601-8338 |

Copyright: 1950

This Certified Sanborn Map combines the following sheets.
Outlined areas indicate map sheets within the collection.

0 Feet 150 300 600

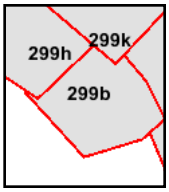


Volume 2A, Sheet 299b
Volume 2A, Sheet 299h
Volume 2A, Sheet 299k

N

# Appendix F
# AGENCY RECORDS

ATTACHMENT 1
SITE TRACKING SHEET

Site Name: CITY OF GLENDALE PUBLIC SERVICE DEPT.

Site Location: 800 AIR WAY
GLENDALE, CA 91201

ASPIS Facility File Number:

Site Screening _____ PA _____ SI _____

Site Summary: See PA Summary

Recommendation: No further action for DTSC. Generator monitoring required by EPA.

Rationale/Supporting Documentation: PA Summary

Supervisor: _____ Preparer: [illegible]

Hours Spent: _____ Date: 7-13-90

ASP 001
11/86

STATE OF CALIFORNIA—HEALTH AND WELFARE AGENCY

GEORGE DEUKMEJIAN, Governor

DEPARTMENT OF HEALTH SERVICES

714/744 P STREET
SACRAMENTO, CA 95814

# PRELIMINARY ASSESSMENT SUMMARY

Glendale Public Service Department
800 Air Way
Glendale ~~Pasadena~~, CA 91201
CAD980735864

May 1984

Preparer: Mary Osborne MO
Toxic Substances Control Division
Southern California Section

## Problem and History

This site is currently operating as an electrical generating plant. The plant was built in 1941 and underwent modifications from 1953-58 and during the late 1970s. It was issued Regional Water Quality Control Board (RWQCB) permits in 1972 and in 1974 for reuse and discharge of cooling water.

A room at the plant was used for temporary storage of polychlorinated byphenyl (PCB) contaminated capacitors during the years 1979-83. These capacitors were periodically disposed of in compliance with the State of California regulations, and "extremely hazardous waste disposal permits" were issued. Disposal practices included burial of 55-gallon drums at Casmalia. Currently, the plant is not storing any PCB wastes.

The plant may generate hazardous waste (asbestos insulation) in the future.

Regulatory agency records do not indicate that disposal of hazardous waste has occurred on site. Adequate storage facilities exist, should they be needed for hazardous waste the power plant may generate in the future.

## Recommendation

The site does not require further investigation. Generation of PCB capacitors will probably continue (see letter dated June 29, 1980), and the site should continue to be monitored as a generator.

sg/5

13. Contacts Mr. Macklehennie, Glendale Public Service, (818) 956-3910; see Agency Contact Record.

14. Incidents

None found per agency check.

Fire and Explosion ___ Direct Contact ___

15. Inspections (date, type, by whom, recommendations)

1/5/78 -- RWQCB -- monitoring reports for surface discharge suspended (May 1978); discharge to storm drain stopped. Delinque t reports for 1977.

10/25/77 -- RWQCB -- exceeded nitrate-nitrate concentration; tower blow-down rate was increased.

7/29/77 -- Fuel oil spill -- operational error; Verdugo wash was dammed.

16. Enforcement History (list date, type of action, requirements, outcome)

Department of Health Services -- Extremely Hazardous Waste Permit, August 16, 1983. Also 6/14/82, 2/16/82, 8/19/81, 9/18/80, and 11/8/79.

Notice of Violation -- Environmental Protection Agency letter, 1/23/80 -- improper storage of PCBs.

17.a. Initial recommendation for further action:

No further action. Wastes are no longer being stored; wastes were legally disposed.

17.b. EPA recommendation for further action:

18. Response Termination: __ No Further Action __ Pending __ Active

Justification:

| | SOURCE | INFORMATION |
|---|---|---|
| 19. Observed Release | | |
| 20. Depth to Aquifer | | |
| 21. Net Precipitation<br>Net seas. rainfall<br>Evaporation | | |
| 22. Permeability of Unsaturated Zone | | |
| 23. Physical State | | |
| 24. Containment (Ground Water) | | |
| 25. Toxicity | | |
| 26. Persistence | | |
| 27. Waste Quantity | | |
| 28. Ground Water Use | | |
| 29. Distance to Well | | |
| 30. Population Served (by Ground Water) | | |

PRELIMINARY ASSESSMENT
Region 9

Preparer's Name Mary Osborne Date May 1984

| | SOURCE | INFORMATION |
|---|---|---|
| 1. Site ID Number | ERRIS | CAD980735864 |
| 2. Site Name | ERRIS | Glendale Public Service Department |
| 3. Site Location | ERRIS | 800 Air Way<br>Glendale, CA 91201 |
| 4. County | ERRIS | Los Angeles |
| 5. Owner (Address & telephone no.) | Phone contact Mr. Macklehennie Glendale Public Service, (818) 956-3910, 4/27/84 | Glendale Public Service<br>119 North Glendale Avenue<br>Glendale, CA 91201<br>Engineering Department (818) 956-3921 |
| 6. Operator (Address & telephone no.) | Same as above | City of Glendale<br>800 Air Way<br>Glendale, CA 91201<br>(818) 956-2088 |
| 7. Type of Ownership | Mr. Macklehennie (818) 956-3910 4/27/84 | Muncipal |
| 8. Status | Same as above | Active power plant; waste storage has ceased. |
| 9. Source Activity | Letter: 6/29/80 William Fell | Individual PCB large high voltage capacitors. (Waste generated by removal of capacitors from service.) |
| 10. Years of Operation | RWQCB Permit No. 74-399 File Letter: 6/29/80 | 1941-83. Electric public utility -- 82 capacitor banks. Generates 10-15 percent of area's electric power. PCB storage in Department of Transportation-approved containers. Storage in compliance with Toxic Substances Control Act. |
| 11. Facility Type | Phone contact Mr. Macklehennie (818) 956-3910 | |
| 12. Waste Type and Description | Phone contact Mr. Macklehennie (818) 956-3910 4/27/84<br><br>Letter: 6/29/80 William Fell | Temporary storage of PCB capacitors. |

13. Contacts Mr. Macklehennie, Glendale Public Service, (818) 956-3910; see Agency Contact Record.

14. Incidents

None found per agency check.

Fire and Explosion ___ Direct Contact ___

15. Inspections (date, type, by whom, recommendations)

1/5/78 -- RWQCB -- monitoring reports for surface discharge suspended (May 1978); discharge to storm drain stopped. Delinque t reports for 1977.

10/25/77 -- RWQCB -- exceeded nitrate-nitrate concentration; tower blow-down rate was increased.

7/29/77 -- Fuel oil spill -- operational error; Verdugo wash was dammed.

16. Enforcement History (list date, type of action, requirements, outcome)

Department of Health Services -- Extremely Hazardous Waste Permit, August 16, 1983. Also 6/14/82, 2/16/82, 8/19/81, 9/18/80, and 11/8/79.

Notice of Violation -- Environmental Protection Agency letter, 1/23/80 -- improper storage of PCBs.

17.a. Initial recommendation for further action:

No further action. Wastes are no longer being stored; wastes were legally disposed.

17.b. EPA recommendation for further action:

18. Response Termination: __ No Further Action __ Pending __ Active

Justification:

EPA

# POTENTIAL HAZARDOUS WASTE SITE LOG

SITE NUMBER

NOTE: The initial identification of a potential site or incident should not be interpreted as a finding of illegal activity or confirmation that an actual health or environmental threat exists. All identified sites will be assessed under the EPA's Hazardous Waste Site Enforcement and Response System to determine if a hazardous waste problem actually exists.

SITE NAME Glendale (City of), Public Service Department
800 Air Way

CITY Pasadena, L.A. Co.

STATE CA

ZIP CODE

SUMMARY OF POTENTIAL OR KNOWN PROBLEM
PCB storage facility not in compliance with 40 CFR Part 761

| ITEM | DATE OF DETERMINATION OR COMPLETION | RESPONSIBLE ORGANIZATION OR INDIVIDUAL (EPA, State, Contractor, Other) | PERSON MAKING ENTRY TO LOG FORM | DATE ENTERED ON LOG (mo, day, yr) |
|---|---|---|---|---|
| 1. IDENTIFICATION OF POTENTIAL PROBLEM | 8-8-79 | EPA | Keith Takata | 12-28-79 |
| 2. PRELIMINARY ASSESSMENT | | | | |
| APPARENT SERIOUSNESS OF PROBLEM: | ☐ HIGH | ☐ MEDIUM ☐ LOW | ☐ NONE ☐ UNKNOWN | |
| 3. SITE INSPECTION | | | | |
| 4. EPA TENTATIVE DISPOSITION (check appropriate item(s) below) | | | | |
| ☐ a. NO ACTION NEEDED | | | | |
| ☐ b. INVESTIGATIVE ACTION NEEDED | | | | |
| ☐ c. REMEDIAL ACTION NEEDED | | | | |
| ☐ d. ENFORCEMENT ACTION NEEDED | | | | |
| 5. EPA FINAL STRATEGY DETERMINATION (check appropriate item(s) below) | | | | |
| ☐ a. NO ACTION NEEDED | | | | |
| ☐ b. REMEDIAL ACTION NEEDED | | | | |
| ☐ c. REMEDIAL ACTION NEEDED BUT, NO RESOURCES AVAILABLE | | | | |
| ☐ d. ENFORCEMENT ACTION NEEDED | | | | |
| ☐ (1) CASE DEVELOPMENT PLAN PREPARED | | | | |
| ☐ (2) ENFORCEMENT CASE FILED OR ADMINISTRATIVE ORDER ISSUED | | | | |
| 6. STRATEGY COMPLETED | | | | |

EPA Form T2070-1 (10-79)

EPA

# POTENTIAL HAZARDOUS WASTE SITE
# IDENTIFICATION AND PRELIMINARY ASSESSMENT

| REGION | SITE NUMBER *(to be assigned by Hq)* |
|---|---|
| IX | |

**NOTE:** This form is completed for each potential hazardous waste site to help set priorities for site inspection. The information submitted on this form is based on available records and may be updated on subsequent forms as a result of additional inquiries and on-site inspections.

**GENERAL INSTRUCTIONS:** Complete Sections I and III through X as completely as possible before Section II *(Preliminary Assessment)*. File this form in the Regional Hazardous Waste Log File and submit a copy to: U.S. Environmental Protection Agency; Site Tracking System; Hazardous Waste Enforcement Task Force *(EN-335)*; 401 M St., SW; Washington, DC 20460.

## I. SITE IDENTIFICATION

| A. SITE NAME | B. STREET *(or other identifier)* | | |
|---|---|---|---|
| Glendale Public Service Dept. | 800 Air Way | | |
| **C. CITY** | **D. STATE** | **E. ZIP CODE** | **F. COUNTY NAME** |
| Pasadena | CA | | Los Angeles |

G. OWNER/OPERATOR *(if known)*
1. NAME
2. TELEPHONE NUMBER

H. TYPE OF OWNERSHIP
☐ 1. FEDERAL ☐ 2. STATE ☐ 3. COUNTY ☐ 4 MUNICIPAL ☐ 5 PRIVATE ☐ 6 UNKNOWN

I. SITE DESCRIPTION

J. HOW IDENTIFIED *(i.e., citizen's complaints, OSHA citations, etc.)*

K. DATE IDENTIFIED *(mo., day, & yr.)*

L. PRINCIPAL STATE CONTACT
1. NAME
2. TELEPHONE NUMBER

## II. PRELIMINARY ASSESSMENT *(complete this section last)*

A. APPARENT SERIOUSNESS OF PROBLEM
☐ 1. HIGH ☐ 2. MEDIUM ☐ 3. LOW ☐ 4 NONE ☐ 5 UNKNOWN

B. RECOMMENDATION
☐ 1. NO ACTION NEEDED *(no hazard)*
☐ 2. IMMEDIATE SITE INSPECTION NEEDED
a. TENTATIVELY SCHEDULED FOR:
b. WILL BE PERFORMED BY:
☐ 3. SITE INSPECTION NEEDED
a. TENTATIVELY SCHEDULED FOR:
b. WILL BE PERFORMED BY:
☐ 4. SITE INSPECTION NEEDED *(low priority)*

C. PREPARER INFORMATION
1. NAME
2. TELEPHONE NUMBER
3. DATE *(mo., day, & yr.)*

## III. SITE INFORMATION

A. SITE STATUS
☐ 1. ACTIVE *(Those industrial or municipal sites which are being used for waste treatment, storage, or disposal on a continuing basis, even if infrequently.)*
☐ 2. INACTIVE *(Those sites which no longer receive wastes.)*
☐ 3. OTHER *(specify)*: *(Those sites that include such incidents like "midnight dumping" where no regular or continuing use of the site for waste disposal has occurred.)*

B. IS GENERATOR ON SITE?
☐ 1. NO
☐ 2. YES *(specify generator's four-digit SIC Code)*:

C. AREA OF SITE *(in acres)*

D. IF APPARENT SERIOUSNESS OF SITE IS HIGH, SPECIFY COORDINATES
1. LATITUDE *(deg.—min.—sec.)*
2. LONGITUDE *(deg.—min.—sec.)*

E. ARE THERE BUILDINGS ON THE SITE?
☐ 1. NO ☐ 2. YES *(specify)*:



Continue On Reverse

EPA

# POTENTIAL HAZARDOUS WASTE SITE CURRENT DISPOSITION
## PART 1 - SITE STATUS

**I. IDENTIFICATION**

| 01 STATE | 02 SITE NUMBER |
|---|---|
| CA | 2460 |

**II. SITE NAME AND LOCATION**

| 01 SITE NAME (Legal, common, or descriptive name of site) | 02 STREET, ROUTE NO., OR OTHER SPECIFIC LOCATION IDENTIFIER | | | | |
|---|---|---|---|---|---|
| Glendale Public Service Dept. | 800 AIR WAY | | | | |
| 03 CITY | 04 STATE | 05 ZIP CODE | 06 COUNTY | 07 COUNTY CODE | 08 CONG DIST |
| PASADENA | CA | | LOS ANGELES | | |

**III. CURRENT SITE STATUS**

01 REPORTING DATE 12 / 29 / 81 (MONTH DAY YEAR)

02 TRACKING COMPLETED (Check one if applicable)

☐ A. SITE REQUIRED NO RESPONSE — DATE CLOSED ___ / ___ / ___ (MONTH DAY YEAR)

☐ B. ALL GOVERNMENT FINANCED ACTIVITIES COMPLETED — DATE COMPLETED ___ / ___ / ___ (MONTH DAY YEAR) — TOTAL COST ___

☐ C. ALL PRIVATELY FINANCED ACTIVITIES COMPLETED — DATE COMPLETED ___ / ___ / ___ (MONTH DAY YEAR)

☒ D. SITE CLOSED — DATE CLOSED 12 / 29 / 81 (MONTH DAY YEAR)

03 PENDING (Check if applicable)

☐ FURTHER RESEARCH AND ANALYSIS REQUIRED — EXPECTED COMPLETION DATE ___ / ___ / ___ (MONTH DAY YEAR)

REFERENCE

04 MONITORING (Check if applicable)

☐ SITE REQUIRES CONTINUED SURVEILLANCE/MONITORING — SCHEDULE ☐ A. MONTHLY ☐ B. SEMI ANNUALLY ☐ C. QUARTERLY ☐ D. ANNUALLY

REFERENCE

05 FULL FIELD INVESTIGATION (Check one if applicable)

☐ A. NEEDED ☐ B. IN PROGRESS ☐ C. COMPLETED — DATE COMPLETED ___ / ___ / ___ (MONTH DAY YEAR)

06 REMEDIAL RESPONSE (Check one if applicable)

☐ A. NEEDED ☐ B. IN PROGRESS ☐ C. COMPLETED — DATE COMPLETED ___ / ___ / ___ (MONTH DAY YEAR)

07 PLANNED REMOVAL (Check one if applicable)

☐ A. NEEDED ☐ B. IN PROGRESS ☐ C. COMPLETED — DATE COMPLETED ___ / ___ / ___ (MONTH DAY YEAR)

08 IMMEDIATE REMOVAL (Check one if applicable)

☐ B. IN PROGRESS ☐ C. COMPLETED — DATE COMPLETED ___ / ___ / ___ (MONTH DAY YEAR)

09 RESPONSIBLE PARTIES (Check if applicable)

☐ RESPONSE/REMOVAL ACTIVITIES UNDER CONTROL OF RESPONSIBLE PARTIES

10 ENFORCEMENT (Privately financed removal/response activities linked to enforcement are carried in the Enforcement Docket System)

☒ A. ADMINISTRATIVE ORDER ISSUED
DATE ISSUED 1 / 23 / 80 (MONTH DAY YEAR)
COMPLIANCE DATE 7 / 3 / 80 (MONTH DAY YEAR)

☐ B. CIVIL/CRIMINAL LITIGATION FILED
DATE FILED ___ / ___ / ___ (MONTH DAY YEAR)
WHERE FILED ___ (Judicial District)
JUDGEMENT/SETTLEMENT DATE ___ / ___ / ___ (MONTH DAY YEAR)

**IV. SITE RANKING**

01 SITE RANKING AVAILABLE (Check one)

☐ A. YES RANKING: ___ ☐ B. NO ☐ C. PLANNED ☐ D. UNNECESSARY ☐ E. UNKNOWN

02 STATE PRIORITY ___

**V. SOURCES OF INFORMATION** (Cite specific references, e.g., state files, sample analysis, reports)

REGION 9 TSCA FILE "Glendale (city of), PUBLIC SERVICE Department

**VI. INFORMATION AVAILABLE FROM**

| 01 PREPARED BY | 02 AGENCY | 03 ORGANIZATION | 04 TELEPHONE NO. | 05 DATE |
|---|---|---|---|---|
| PAUL BLAIS | EPA | A+H.AD | (415) 974-8238 | 12 / 29 / 81 (MONTH DAY YEAR) |

EPA FORM 2070-14 (7-81)

STATE OF CALIFORNIA—HEALTH AND WELFARE AGENCY

GEORGE DEUKMEJIAN, Governor

**DEPARTMENT OF HEALTH SERVICES**
1449 WEST TEMPLE STREET
LOS ANGELES, CA 90026-5698

# Preliminary Assessment Summary

CAD980735864
Glendale Public Service
Department
800 Air Way
Pasadena, CA 91201

May 1984

Preparer: Mary Osborne MO
Toxic Substances Control Division
Southern California Section

## Problem and History:

This site is currently operated as an electrical generating plant and supplies 10-15% of the area's demand. The plant was built in 1941, and has undergone modifications from 1953 to 1958 and during the late 1970's. Early problems included surface water discharge from boiler blowdown and cooling towers. (Initial RWQCB permits 1972 and 1974.) Specific hazardous waste problems included temporary storage of PCB contaminated capacitors (1979-1983). These capacitors were disposed of in conjunction with the Department of Health Services under extremely hazardous waste permits. Disposal practices included burial of 55 gallon drums (type 17E, 17H) at Casmalia. The plant plans to dispose of asbestos material (insulation) in the future.

## Recommendation:

The site does not require further investigation. Future health inspections may be necessary to ensure proper disposal of asbestos. Disposal of PCB capacitors will probably continue (letter of June 29, 1980) and may require monitoring by EPA.

PRELIMINARY ASSESSMENT
Region 9

Preparer's Name Mary Osborne MO Date May 1984

| | SOURCE | INFORMATION |
|---|---|---|
| 1. Site ID Number | ERRIS | CAD980735864 |
| 2. Site Name | ERRIS | Glendale Public Service Department |
| 3. Site Location | ERRIS | 800 Air Way<br>Glendale, CA 91201 |
| 4. County | ERRIS | Los Angeles |
| 5. Owner (Address & telephone no.) | Phone contact<br>Mr. Macklehennie<br>Glendale Public<br>(818) 956-3910<br>4/27/84 | Glendale Public Service<br>119 N. Glendale Avenue<br>Glendale, CA 91201<br>Engr. Dept. (818) 956-3921 |
| 6. Operator (Address & telephone no.) | Phone contact<br>Mr. Macklehennie<br>Glendale Public<br>(818) 956-3910<br>4/27/84 | City of Glendale<br>800 Air Way<br>Glendale, CA 91201<br>(818) 956-2088 |
| 7. Type of Ownership | Mr. Macklehennie<br>(818) 956-3910 4/27/84 | Municipal |
| 8. Status | Mr. Macklehennie<br>(818) 956-3910 4/27/84 | Active |
| 9. Source Activity | Letter: 6/29/80<br>William Fell | Individual PCB large high voltage capacitors. |
| 10. Years of Operation | RWQCB Permit<br>#74-399 File | 1941 - present |
| 11. Facility Type | Letter: 6/29/80<br>Phone contact<br>Mr. Macklehennie<br>(818) 956-3910 | Electric public utility - 82 capacitor banks. Generates 10-15% of area's electric power. |
| 12. Waste Type and Description | Phone contact<br>Mr. Macklehennie<br>(818) 956-3910<br>4/27/84<br>Letter: 6/29/80<br>William Fell | Temporary storage of PCB capacitors. Planned future disposal of asbestos insulation. |

13. Contacts Mr. Macklehennie, Glendale Public Service (818) 956-3910
See Agency Contact Record.

14. Incidents

None found per agency check.

Fire and Explosion ____ Direct Contact ____

15. Inspections (date, type, by whom, recommendations)

1/5/78: RWQCB, monitoring reports for surface discharge suspended (5/78); discharge to storm drain stopped. Delinquent reports for 1977.
10/25/77: RWQCB, exceeded nitrate-nitrate conc.; tower blowdown rate was increased.
7/29/77: Fuel oil spill - operational error, Verdugo wash was dammed.

16. Enforcement History (list date, type of action, requirements, outcome)

DOHS - Extremely Hazardous Waste Permit August 16, 1983. Also 6/14/82, 2/16/82, 8/19/81, 9/18/80, 11/8/79.
N.O.V. - EPA letter 1/23/80, improper storage of PCB's.

17.a. Initial recommendation for further action:

No further action at this time. Low priority for future disposal practices.

17.b. EPA recommendation for further action:

18. Response Termination: ___ No Further Action ___ Pending ___ Active

Justification:

SITE NAME: GLENDALE PUBLIC SERV DEPT

ALIAS AND ALIAS LOCATION DATA
**********

*ALIAS* (ACTION *_* - FOR DATA ENTRY USE ONLY)

SEQ. NO.: *__* ALIAS NAME: *_____* SOURCE: *_*

*ALIAS LOCATION* (ACTION *_* - FOR DATA ENTRY USE ONLY)

CONTIGUOUS PORTION OF SITE: *_*

STREET: *_____* CONG. DIST.: *__*

CITY: *_____* ST: *__* ZIP: *____-___*

CNTY NAME: *_____* CNTY CODE: *___*

LATITUDE: *__/__/__._* LONGITUDE: *___/__/__._*

*ALIAS* (ACTION *_* - FOR DATA ENTRY USE ONLY)

SEQ. NO.: *__* ALIAS NAME: *_____* SOURCE: *_*

*ALIAS LOCATION* (ACTION *_* - FOR DATA ENTRY USE ONLY)

CONTIGUOUS PORTION OF SITE: *_*

STREET: *_____* CONG. DIST.: *__*

CITY: *_____* ST: *__* ZIP: *____-___*

CNTY NAME: *_____* CNTY CODE: *___*

LATITUDE: *__/__/__._* LONGITUDE: *___/__/__._*

SITE DATA
*********

EPA ID NO.: CAD980735664 SHEET 01

(ACTION : *_* - FOR DATA ENTRY USE ONLY)

SF ID: *__* *__* *__*
*__* *__*

SITE NAME: GLENDALE PUBLIC SERV DEPT
STREET: 800 AIR WAY
CITY: GLENDALE
CNTY NAME: LOS ANGELES

SOURCE: 5
CONG. DIST.: 22
ST: CA ZIP: 91201-____
CNTY CODE: 037

SOURCE COUNTS (NOT UPDATABLE)

| | |
|---|---|
| NOTIS: | 0 |
| STS: | 1 |
| HWDMS: | 0 |
| COMPOSITE: | 0 |
| OTHER: | 0 |

NATL PRIORITY: N

HRS: *___._*

HRS DATE (YY/MM): *__/__*

LATITUDE: *__/__/__._*

LONGITUDE: *__/__/__._*

RESPONSE TERMINATION (CHECK ONE IF APPLICABLE): PENDING *_* NO FURTHER ACTION *_*

ENFORCEMENT DISPOSITION (CHECK ANY THAT APPLY): NO VIABLE RESPONSIBLE PARTY *_* VOLUNTARY RESPONSE *_*
ENFORCED RESPONSE *_* COST RECOVERY *_*

EVENTS
******

| | (ACTION - FOR DATE ENTRY USE ONLY) | | EVENT TYPE | DATE (YY/MM) STARTED | DATE (YY/MM) COMPLETED | CONDUCTED BY EPA | STATE | RESP/PARTY | OTHER | COUNTS |
|---|---|---|---|---|---|---|---|---|---|---|
| EVENTS | *_* | (X) | SITE DISCOVERY (SD) | | 79/08 | | | | | |
| | *_* | | PRELIMINARY ASSESSMENT (PA) | | *__/__* | | | | | |
| | *_* | | SITE INVESTIGATION (SI) | *__/__* | *__/__* | *_* | *_* | | | |
| | *_* | | REMEDIAL ACTION (RD) | *__/__* | *__/__* | *_* | *_* | *_* | *_* | *__* |
| | *_* | | REMOVAL ACTION (RV) | *__/__* | *__/__* | | | | | *__* |
| ENFORCE EVENTS | *_* | | ENFORCEMENT INVESTIGATION (EI) | *__/__* | *__/__* | *_* | *_* | | *_* | |
| | *_* | | ADMINISTRATIVE ORDER (AO) | *__/__* | *__/__* | *_* | *_* | | *_* | |
| | *_* | | JUDICIAL ACTION (JA) | *__/__* | *__/__* | *_* | *_* | | *_* | |

AGENCY CONTACT RECORD

MO.

| Agency | Contact | Date | Response |
|---|---|---|---|
| D.O.H.S. — L.A. 213-620-2380 | File Search | 4/16/84 | No File Info. — extremely hazardous waste permits |
| County Engineer 213-738-2533 | File Search Carl Sjoberg | 4/17/84 | No file Info. — not a contract city. |
| RWQCB — L.A. | File Search 213 620-4460 | 4/18/84 | See Memo. (notes) |
| County Health | File Search | 4/17/84 | No file Info. |
| Company Contact | Mr. Mackleliennie 818-956-3910 | 4/27/84 | See Memo. |
| Drive-by — field | Self | 4/20/84 | See Memo. |
| City, County Sanitation | Carl Tripp — file search Leon Director — file search | 5/1/84 | No File Info. |
| | | | |
| | | | |

5/2/84

City of Glendale
Grayson Power Plant

drums - all 55 gal type 17C
or 17H

D.O.H.S.
— summary of permits obtained:

8/16/83: 1 drum of PCB contaminated material hauled by Chemical Waste Management, (approximately 4 gal. of PCB's) - incinerated

6/14/82: 136 drums of PCB's disposed of by Safe Engineering Disposal (WI) and Tri-State Motor Transit co. (MO) — incinerated.

2/16/82: 4 drums of PCB's disposed of by Chancellor & Ogden at Casmalia or U.S. Ecology (NV). — burial.

9/18/80: 5 drums of PCB's disposed by Falcon Disposal Service at Casmalia. — burial.

11/8/79: 2 drum of PCB's, Falcon Disposal to Casmalia — burial
22 capacitors

(copies included here)

MQ

State of California—Health and Welfare Agency

Department of Health Servic
Hazardous Materials Management Sectio

**MEMO OF CALL**

Name: Mr. Macklehennie

Date: 4/27/84

Firm: Glendale Public Service Dept

Time: 10:00

Address: Superintendent
Grayson Power Plant
~~119 N.~~ 800 Air Way

Person Taking or Making Call: Mary Osborne

Telephone No.: 818-956-3912 → Stan Thallenberg

Subject: Grayson Power Plant

Message: Mr. Macklehennie returned my call after I contacted the Glendale Public Service Dept. at 119 N. Glendale Ave. I was informed that there is an ongoing investigation of prior handling of PCB capacitors. The plant had been used as a collection point for approved D.O.T. containers. Some of these were hauled to dumpsites in Corona. Currently there is no waste production at the plant but the future plans involve disposal of asbestos used for insulation. The plant has been operational since 1941 and underwent a large cutback in operation in 1977. The plant supplies about 10-15% of the power in the area. There are 5 steam turbines, 2 gas powered turbines and 1 gas turbine combine at the facility. The plant uses reclaimed coolant water from the Glendale sewage plant. I requested that Mr. Macklehennie get back to me with any additional information.

5/1/84 → I received a phone call from the Public Service Dept. informing me that the last hauler of containers was Chem. Waste Mgmt. Inc. and that a state permit had been issued in Aug. of 1983 to cover the disposal of the capacitors. (see Nannet Alvarez - DOHS)

Glendale Public Service Dept. (P.S.D.)

RWQCB – File Info. Summary 4/15/84

Contact: City of Glendale, 119 N. Glendale Ave. (~~[illegible]~~)
Site: L.W. Grayson Steam Electric Generating Station

May 22, 1978: Letter to the General Manager of the P.S.D. detailing the diversion of cooling tower water to the sanitary sewer. Monitoring program suspended – no discharge to surface waters.

April 28, 1978: Letter to the P.S.D. notifying them of delinquent summary reports.

Nov. 7, 1977: Letter from the P.S.D. reporting corrective measures for excessive discharge of nitrates.

Oct. 6, 1977: Letter from the P.S.D. reporting corrective measures for metals discharge and a fuel oil spill.

1974: NPDES PERMIT # CA0001031, details discharge points and operating history.

1972 – Special Report by Engineering-Science
Map of facility and discharge quantities, qualities

Name: Glendale Public Serv. Dept. T.B. _____

Address: 800 Air Way SIC.# _____

City, Zip: Glendale, CA 91201

SITE DRIVE-BY

1. Status
   a. Active (X)
      Inactive ( )
   b. Different Company _____

2. Setting
   a. Urban (X)
      Suburban ( )
      Rural ( )
   b. Residential ( )
      Commercial (X)
      Industrial ( )
      Other _____
   c. Near: RR tracks ( )
      Drainage ( )
      (134) Freeway ( )
      Other _____

3. Waste
   a. Group 1 ( )
      Group 2 ( )
      Group 3 ( )
   b. Liquid ( )
      Sludge ( )
      Solid ( )
      Other _____
   c. Undetermined ( )
      None Visible (X)

4. Waste Containment
   a. Pond ( )
      Sump ( )
      Pit ( )
   b. Drum/Brl ( )
      Pail/Can ( )
      Trash can ( )
      Dumpster ( )
      Box/Pallet ( )
      Bag/Sack ( )
      Vehicle ( )
   c. To: Ground ( )
      Paving ( )
      Drain ( )
      Other _____
   d. Piled ( )
      Scattered ( )
   e. Tanks ( )
      Other _____

5. Miscellaneous
   a. Odors _____
   b. Vegetation NONE
   c. Topography _____
   d. Site Observability [illegible] _____

6. Map & Comments

A graphic site description. In addition to above, draw, describe and comment on the following: Buildings, Paving, Storage (raw material and products) Security, Vacant Areas, and Housekeeping. Also identify streets, landmarks, directions, etc.

[illegible] gated facility [illegible] entry

7. Evaluation
   a. No Problem (X)
   b. SAP Follow-up ( ): _____
   c. Possible Abandoned Site ( )
   d. Referral to ( ) _____

Date: [illegible]

(Rev. 2/84)

Name: [illegible]

PERMIT NUMBER 3 - 1 2 0

Date of Issue 0 2 1 0 8 3

# CALIFORNIA EXTREMELY HAZARDOUS WASTE DISPOSAL PERMIT

California Department of Health Services
Hazardous Waste Management Branch

Pursuant to Section 66595, Title 22, Division 4, California Administrative Code, approval is granted to:

of Glendale
North Glendale Avenue
[illegible], CA [illegible]
[illegible] R. Kelly, [illegible]

Telephone No. [illegible]

County [illegible]

[illegible] Hazardous Waste Management Inc.

to dispose of the wastes listed below subject to acceptance by:

[illegible] Hazardous Waste Management Inc.
[illegible] Box [illegible]
[illegible], CA 90210

Registered Hazardous Waste Hauler (Name and Address)

and

Disposal Site (Name and Address)

Alternate Disposal Site (Name and Address)

*All handlers must be instructed in safety precautions for handling the materials to ensure worker and public safety.*

Description of Waste:
*(Including Composition with Upper and Lower Concentrations of Hazardous Components)*

| | Waste Component(s) | Upper | Lower | % | ppm | QUANTITY On One Time Basis: Number: | Units: |
|---|---|---|---|---|---|---|---|
| | [illegible] | | | | | | |
| | [illegible] | | | | | | |
| WASTE 1 | | | | | | On Year's Permit: | |
| | | | | | | Per Disposal [illegible] | |
| | | | | | | Per Year [illegible] | |

Description of Packaging, Containerization and Transport: ☐ Drums ☐ Cartons ☐ Bottles ☐ Tank Truck ☐ Other

**PROPOSED METHOD OF DISPOSAL** ☐ Burial ☐ Ponding ☐ Storage** ☐ **Incineration** ☐ Other (Specify): _____
☐ Treatment (Specify): _____
☐ Recycling (Specify method of reuse): _____

*Packaging, containerization, and transport of the material shall be in accordance with Title 49, Code of Federal Regulations for hazardous materials, and with regulations of the California Highway Patrol, Title 13, California Administrative Code, for intrastate transport of hazardous materials and, for PCB-containing wastes, in accordance with U.S.E.P.A. regulations set forth in Title 40 CFR Part 761.*

Permit to be used on a one time basis . . . . . ☐

Permit to be used for a period of one year from date of issue until (expiration date) _____ ☐

*For renewal, send a copy of existing permit with cover letter requesting any additional amendments.*

*The producer shall be responsible for renewing permit before expiration date and for recording the Extremely Hazardous Waste Permit Number in the lower right corner of the California Liquid Waste Hauler Record accompanying the waste. If there are any questions, please contact:*

Department of Health Services
HAZARDOUS WASTE MANAGEMENT BRANCH
107 South Broadway, Room 7128
Los Angeles, CA 90012

_____
*Authorized Signature*

**Storage means holding at an off-site facility for greater than 72 hours. (Section 66192, Title 22, CAC) [illegible] ALVAREZ

8019-001

3-4229

# City of GLENDALE CALIFORNIA

PUBLIC SERVICE DEPARTMENT
WATER – LIGHT – POWER

119 North Glendale Ave.
Glendale, CA 91206-4496
Telephone: (213) 956-2107

Hazardous Materials Div.
AUG 16 1983
Co. of Los Angeles

August 15, 1983

State Department of Health Services
Room 7128, 107 South Broadway
Los Angeles, California 90012

Attention Maxine Wheatley

Gentlemen:

Reference: Request for Disposal Permit for Incineration of Two Capacitors Containing Polychlorinated Biphenyls

The Public Service Department of the City of Glendale requests a disposal permit for incineration of two capacitors containing polychlorinated biphenyls described as follows.

1 - Two non-leaking capacitors, each containing approximately two gallons of PCB, and deposited in one 55 gallon steel drum type D.O.T. 17C containing safestep sorbent material. The steel drum is properly labeled with "Caution Contains PCB" labels per EPA regulations.

The Public Service Department of the City of Glendale will use the services of Chemical Waste Management Inc. located at 40 Atlantic Avenue, Suite C, Long Beach, California 90802 for transportation of material and disposal. The technical representative for Chemical Waste Management Inc. is Mr. Richard Barna, telephone (213) 435-6622.

Very truly yours,

William H. Fell

WILLIAM H. FELL, P.E.
General Manager and Chief Engineer

CS/nl

3-2491

# City of GLENDALE CALIFORNIA

PUBLIC SERVICE DEPARTMENT
WATER – LIGHT – POWER

119 North Glendale Ave.,
Glendale, CA 91206
Telephone: (213) 956-2107

May 26, 1982

Hazardous Materials
JUN 11 1982
California Dept. of Health
LOS ANGELES

State Department of Health Service
Room 7178, 107 South Broadway
Los Angeles, California 90012

Attention Susan B. Romero

Gentlemen:

Reference: Request for Disposal Permit for Incineration of Capacitors Containing PCB (Polychlorinated Biphenyls)

The Public Service Department of the City of Glendale requests a disposal permit for incineration of capacitors containing polychlorinated biphenyls, described as follows.

1. Three hundred eighty-nine non-leaking capacitors, each containing approximately two gallons of PCB, and deposited in one hundred thirty 55 gallon steel drums type D.O.T. 17C, containing sawdust and safestep sorbent material. All drums are properly labeled with "Caution Contains PCB" labels per EPA regulations.

2. Ten leaking capacitors, deposited in six 55 gallon steel drums type D.O.T 17C, containing sawdust and safestep sorbent material. All drums are properly labeled with "Caution Contains PCB" labels per EPA regulations.

The Public Service Department of the City of Glendale will use the facilities of S.E.D. (Safe Engineering Disposal) Inc., P.O. Box 1306, Waukesha, Wisconsin 53187, for incineration, and Tri-State Motor Transit Co., P.O. Box 113, Joplin, Missouri 64801, for transportation of materials. The local representative for S.E.D. Inc. in Los Angeles is Cunningham Co. Inc., 2424 North Rosemead Boulevard, South El Monte, California 91733, telephone (213) 350-1461.

Very truly yours

W. H. Fell by [illegible]

WILLIAM H. FELL, P.E.
General Manager and Chief Engineer

CS/nl

NCD 980624[illegible]
50 [illegible]
Greenbelt, Md
MC 21140

STATE OF CALIFORNIA—RESOURCES AGENCY

EDMUND G. BROWN JR., Governor

CALIFORNIA REGIONAL WATER QUALITY CONTROL BOARD—
LOS ANGELES REGION
107 SOUTH BROADWAY, SUITE 4027
LOS ANGELES, CALIFORNIA 90012
(213) 620-4460

RWQCB

MAY 22 1978

City of Glendale
Public Service Department
179 N. Glendale Avenue
Glendale, California 91206

ATTN: Mr. William H. Poll
General Manager and Chief Engineer

RE: Grayson Power Plant (NPDES Permit No. CA0001031)(CI 5753)(M-5753)

Gentlemen:

Reference is made to our letter of April 28, 1978, and to yours of May 8, 1978.

Your letter stated you plan in the near future to divert the cooling tower drain lines directly to the sanitary sewer, and that during the interim you will check and lock the drain valves in the closed position and apply seals to verify the valves remained closed.

This procedure will be satisfactory. You are reminded, however, that there must be no discharge through the cooling tower drain lines until permanent diversion to the sewer has been made. You are requested to notify the Board as soon as the diversion is completed so that Board staff may verify that discharge to the storm drain is no longer possible. When this has been done, the waste discharge requirements will be considered for rescission. You will be notified of the date and location of the Board meeting at which this is to be scheduled for consideration.

Inasmuch as there is no longer a waste discharge to surface waters, you are hereby authorized to discontinue the monitoring program. No further to mutual monitoring reports need be submitted for this discharge. Under the circumstances, the overdue first quarter 1978 report and annual summary report for 1977 will also not be required.

Very truly yours,

Original signed by
Raymond M. Hertel
RAYMOND M. HERTEL
Executive Officer

RCB:rcc

cc: State Water Resources Control Board, Legal Division
ATTN: Mr. Harry Schueller
Environmental Protection Agency, Region IX

(over)

RWQCB

City of GLENDALE CALIFORNIA

PUBLIC SERVICE DEPARTMENT
WATER – LIGHT – POWER

119 NORTH GLENDALE AVE.
GLENDALE 91206
TELEPHONE (213) 956-2107

May 8, 1978

California Regional Water Quality Control Board
Los Angeles Region
Suite 4027, 107 South Broadway
Los Angeles, CA 90012

Attention Raymond H. Hertel, Executive Officer

Gentlemen:

Reference: Technical Monitoring Reports
(C.I. File No. 5753) (CA0001031)
(M-5753) Grayson Power Plant

In response to your letter of April 28, 1978, this letter will constitute our written report detailing the course of action we propose to take regarding our cooling tower drain lines.

During the visit by your staff on January 5, 1978, to our Grayson Power Plant, we outlined our proposed plan of action and it was our understanding that we would be informed if this plan which we proposed was acceptable to the board.

We plan in the near future to divert the cooling tower drain lines directly to the sanitary sewer rather than through the blowdown lift station. We, therefore, propose that immediately following your approval of this action, we will chain and lock the drain valves in the closed position and apply seals to verify that they have remained closed. This action will leave the valves operable in the future when the drain diversion is complete.

Please advise us if this approach is acceptable to you. If you require any further information, please call our Senior Electro-Mechanical Engineer, William R. Hall, at (213) 956-3912.

Very truly yours,

W. H. Fell
General Manager and Chief Engineer

WRH:cms-c
cc: H. Woodbury
R. Young
H. Samow
J. McElhiney

5-12

RWQCB

CALIFORNIA—RESOURCES AGENCY

EDMUND G. BROWN JR., Governor

CALIFORNIA REGIONAL WATER QUALITY CONTROL BOARD—
LOS ANGELES REGION
107 SOUTH BROADWAY, SUITE 4027
LOS ANGELES, CALIFORNIA 90012
(213) 620-4460

APR 28 1978

City of Glendale
Public Service Department
119 North Glendale Avenue
Glendale, California 91206

ATTENTION: Mr. William H, Fell
General Manager and Chief Engineer

RE: Waste Discharge Requirements-Grayson Power Plant
(CA0001031) (CI 5753)

Gentlemen:

On January 5, 1978, this Board's staff, together with Mr. William R. Hall of your staff verified the diversion of all wastes from the Grayson Power Plant to the sanitary sewer system.

We found that discharge lines for the drainage of cooling towers still exist and remain usable. These lines must first be rendered unusable, before we recommend to the Board rescission of your NPDES Permit.

Also, the Monitoring and Reporting Program for your waste discharge provides for technical monitoring reports to be furnished to the Board at regular intervals, and for a summary report to be submitted each year by January 30th for the calendar year just ended.

We have not yet received your annual summary report for 1977. We also have not received your report for the January-February-March, 1978, reporting period.

It is requested that you submit such delinquent reports to this Board no later than May 15, 1978.

It is further requested that you submit a separate written report to this Board by May 15, 1978, detailing the course of action you have chosen regarding the cooling tower drainage lines as discussed above, including the time schedule for implementation of such plan.

If you have any questions, please call Mr. Miller E. Chambers at the above-listed number.

Very truly yours,

ORIGINAL SIGNED BY
RAYMOND M. HERTEL
Executive Officer

RWQCB

City of GLENDALE CALIFORNIA

PUBLIC SERVICE DEPARTMENT
WATER – LIGHT – POWER

119 NORTH GLENDALE AVE.
GLENDALE 91203
TELEPHONE (213) 956-2107

November 7, 1977

California Regional Water Quality Control Board
Los Angeles Region
107 South Broadway, Suite 4027
Los Angeles, California 90012

Attention Mr. Raymond M. Hertel, Executive Officer

Gentlemen:

Reference: Waste Discharge Requirements
Grayson Power Plant
(CA0001031) (CI5753)

In your letter of October 25, 1977, you noted that a test performed by your Mr. Acedera showed that the discharge limit for Nitrate-N plus Nitrite-N had been exceeded for Discharge #001. This letter constitutes our report of corrective and preventive measures taken and the time schedule of their implementation.

Our operating procedures are being modified to increase the tower blowdown rate and thus to reduce the Nitrate/Nitrite concentration. Additionally, work is proceeding on the blowdown lift station to divert these wastes to the sanitary sewer.

It is our intention to meet all of the requirements of our permit. Our Plant procedures are directed toward this end, and our Plant personnel strive to ensure compliance with the permit requirements. Should you have any further questions or if we may be of assistance, please call our Senior Electro-Mechanical Engineer, William R. Hall at (213) 956-3912.

Very truly yours

WILLIAM H. FELL
General Manager and Chief Engineer

WRH/nl
McElhiney
Koontz

EDWARD K. HARRIS

RWQCB

City of GLENDALE CALIFORNIA

PUBLIC SERVICE DEPARTMENT
WATER – LIGHT – POWER

119 NORTH GLENDALE AVE.
GLENDALE 91206
TELEPHONE (213) 956-2107

October 6, 1977

Rmt 10/11/77

California Regional Water Quality Control Board
Los Angeles Region
107 South Broadway, Suite 4027
Los Angeles, California 90012

Attention Mr. Raymond M. Hertel, Executive Officer

Gentlemen:

Reference: Waste Discharge Requirements
Grayson Power Plant
(CA0001031) (CI5753)

In your letter of September 27, 1977, you mentioned two occasions when discharge limitations had been exceeded and one occurrence of an oil spill which was cleaned up. In response to your request, this letter constitutes our written technical report on the above subjects.

Following your telephone conversations on July 19, 1977, with Mr. Hall and Mr. Boothe of this Department, it was determined that the No. 4 Cooling Tower could be drained in compliance with our permit requirements by draining slowly and by using large amounts of fresh water for dilution. It is believed that the high levels of suspended and settleable solids detected on July 25, 1977, were primarily due to iron oxide in the drain pipe and not from the cooling tower effluent. We have, however, modified our discharge procedure to drain at a slower rate and will be using larger amounts of dilution water (approximately 800 gallons per minute was used for one hour for this draining). (150,000 gal)

The discharge noted on July 29, 1977, which "was turbid and had a yellowish-green coloration" is not believed to have been due to Power Plant operations, as wastes of this type were not being developed in the Plant at that time. On the date mentioned our Power Plant Superintendant, Mr. McElhiney, found a yellowish green liquid going into the drain from the parking space/roadway area due south of our retention tank. On investigating further, it was found that a radiator coolant was leaking from the cooling system of a car belonging to a contractor. The coolant was cleaned up and the vehicle removed. estimated at 20 gal.

The fuel oil spill on July 29, 1977, was discussed in our letter of September 30, 1977, to you. The oil spill, as was noted, estimated at 20 gal. to Verdugo Wash.

RWQCB

was due to an operational error. Correct operating practices and procedures have been reviewed with our operators to prevent any further spills. Regarding the measures taken to prevent the oil from entering the drain (sandbagging or covering the drain), sand and equipment are available at all times for this purpose and were used to dam the drain area. It was not possible, however, in the time available to prevent some oil from entering the drain.* Our plant personnel then dammed the areas of the Verdugo Wash where oil had entered. More than 530 man-hours of labor were expended on the cleanup process, including salt water flushing of the drains to prevent any oil from proceeding down the wash.

It is our intention to meet all of the requirements of our permit. Our Plant procedures are directed toward this end, and our Plant personnel strive to ensure compliance with the permit requirements. Should you have any further questions or if we may be of assistance, please call our Senior Electro-Mechanical Engineer, William R. Hall at (213) 956-3912.

Very truly yours

WILLIAM H. FELL
General Manager and Chief Engineer

WRH/nl

* Pending instructions - WHF 10/12

CALIF[illegible] REGIONAL [illegible] BOARD
LOS ANGELES REGION

ORDER NO. [illegible]-3 9 9

5252

RWQCB

NPDES NO. CA0001031

WASTE DISCHARGE REQUIREMENTS
FOR
CITY OF GLENDALE, PUBLIC SERVICE DEPARTMENT
(L. W. Grayson Steam - Electric Generating Station)
800 Air Way, Glendale, California

The California Regional Water Quality Control Board, Los Angeles Region, (hereafter Board), finds that:

1. City of Glendale, Public Service Department (hereafter discharger), by application No. CA075-OYQ-2-000144 dated June 29, 1971, has applied for waste discharge requirements and a permit to discharge wastes under the National Pollutant Discharge Elimination System.

2. The discharger presently discharges wastes from five cooling towers, boilers, and pump glands into Los Angeles River and its tributary, Verdugo Wash, waters of the United States, at two points:

   Discharge 001: Approximately 300 feet east of the confluence of Verdugo Wash and the Los Angeles River on the north bank of Verdugo Wash.

   Discharge 002: Approximately 500 feet north of the confluence of Verdugo Wash and the Los Angeles River on the east bank of the Los Angeles River.

3. The report of waste discharge describes two existing discharges as follows:

   Discharge 001 (cooling tower blowdown, boiler blowdown, pump gland leakage, annual cooling tower wash for towers 1 and 2, and boiler drainage).

   Average Flow: 600,000 gallons per operating day.
   Average Temperature (normal operation): 85 °F Summer; 80 °F Winter.

   Discharge 002 (annual cooling tower wash from towers 3, 4, and 5)

   Maximum Flow: 600,000 gallons per operating day.

4. L. W. Grayson Steam - Electric Generating Station was built in 1941 and modified from 1952-1953. The rated capacity of the Station is 219 megawatts (143 baseload, 55 peaking, 21 cycling).

5. The discharge is presently governed by Waste Discharge Requirements, Order No. 72-52, which allow discharge to Los Angeles River and its tributary, Verdugo Wash.

6. An Interim Water Quality Control Plan for the Santa Clara and Los Angeles River Basins was adopted by the Board on June 10, 1971, and updated on December 13, 1972. The Interim Basin Plan contains water quality objectives for Los Angeles River and its tributaries.

RWQCB

7. Effluent limitations, national standards of performance, toxic and pretreatment effluent standards, and discharge criteria established pursuant to Sections 301, 302, 303(d), 304, 306, 307, and 316 of the Federal Water Pollution Control Act and amendments thereto are applicable to the discharge.

8. The beneficial uses of the Los Angeles River are: recreation (both water-contact and non-water-contact), groundwater recharge, freshwater habitat, and (within the tidal prism) marine habitat.

9. The discharger and interested agencies and persons have been notified of the Board's intent to prescribe revised requirements for the existing discharge and have been provided with the opportunity to submit their written views and recommendations.

10. The Board, in a public hearing, heard and considered all comments pertaining to the discharge and to the tentative requirements.

IT IS HEREBY ORDERED, pursuant to the provisions of Division 7 of the California Water Code and regulations adopted thereunder, and to the provision of the Federal Water Pollution Control Act as amended, and regulations and guidelines adopted thereunder, that the discharger shall comply with the following:

A. Discharge Requirements

1. Existing Waste Discharge Requirements, Order No. 72-52, shall remain in effect.

2. Pursuant to Section 13379 of the Porter Cologne Water Quality Control Act, the discharge shall comply with all applicable effluent limitations, national standards of performance, toxic and pretreatment effluent standards, ocean discharge criteria and all other final regulations established pursuant to Sections 301, 302, 303(d), 304, 306, 307, and 316, of the Federal Water Pollution Control Act and amendments thereto.

3. The discharge shall not cause a violation of any applicable water quality standard for receiving waters adopted by the Board or the State Water Resources Control Board.

B. Provisions

1. In cases of disagreement between this order and existing waste discharge requirements contained in Order No. 72-52, this order will control.

2. The discharger shall initiate actions necessary to assure compliance with all applicable provisions of those laws and regulations referenced in Discharge Requirements A.2. and A.3. which have implementation dates after the expiration date of this order.

3. The monitoring and reporting programs of waste discharge requirements, Order No. 72-52, shall remain in effect. The Executive Officer may revise or amend this program for the purpose of gathering data on low volume waste sources which are subject to control by applicable regulations.

RWQCB

4. Within twelve (12) months of the date of adoption of this order the discharger shall submit any requests for exceptions allowed by those laws and regulations described in A.2. and A.3. above. Such requests shall be accompanied by all necessary supporting data and studies as required by the Board or the State Water Resources Control Board or applicable State or federal regulations. If such requests are required at an earlier date by regulation established pursuant to Sections 304 or 316 of the FWPCA, the request shall be made by the prescribed date.

5. Within twelve (12) months of the date of adoption of this order the discharger shall complete all studies necessary to implement the provisions of all regulations established pursuant to Section 316(b) of the Federal Water Pollution Control Act.

6. Discharger does not waive any right it may have to administrative or judicial review of any limitation, standard, criterion, or regulation.

7. The discharger shall comply with all items of the attached "Standard Provisions and Reporting Requirements".

8. This Order expires eighteen (18) months from the date of its adoption. The discharger must file a report of waste discharge in accordance with Title 23, Chapter 3, Subchapter 9 of the California Administrative Code, not later than 180 days in advance of such expiration date. Subsequent waste discharge requirements will implement all applicable provisions of those laws and regulations referenced in Discharge Requirements A.2. and A.3.

This Order shall serve as a National Pollutant Discharge Elimination System permit pursuant to Section 402 of the Federal Water Pollution Control Act or amendments thereto, and shall take effect at the end of 10 days from date of adoption provided the Regional Administrator, Environmental Protection Agency, has no objections.

I, Raymond M. Hertel, Executive Officer, do hereby certify that the foregoing is a full, true, and correct copy of an Order adopted by the California Regional Water Quality Control Board, Los Angeles Region, on December 16, 1974.

Raymond M. Hertel

RAYMOND M. HERTEL, Executive Officer

RMH:lf

3-2612

# City of GLENDALE CALIFORNIA

PUBLIC SERVICE DEPARTMENT
WATER – LIGHT – POWER

119 North Glendale Ave.,
Glendale, CA 91206
Telephone: (213) 956–2107

FEB 10 1982
...ment
...rvices
...ANGELES

February 5, 1982

State Department of Health Service
Room 7128
107 South Broadway
Los Angeles, California 90012

Attention Susan Romero

Gentlemen:

Reference: Request for disposal permit for contaminated material containing polychlorinated biphenyls (PCB)

The Public Service Department of the City of Glendale requests a disposal permit for material contaminated with PCB as described as follows.

1. Debris, consisting of soil, rags, shoes, gloves, deposited in four 55 gallon drums type 17H.

The Public Service Department of the City of Glendale will use the facilities of BKK Corporation of Wilmington, California, to transport the referenced material to the authorized location of U.S. Ecology, Beatly, Nevada. All 55 gallon steel drums are properly labeled "Caution Contain PCB" labels per EPA regulations.

1. hauler
2. type of disposal
3. quantity

Very truly yours

WILLIAM H. FELL, P.E.
General Manager and Chief Engineer

CS/nl

PERMIT NUMBER [illegible] - [illegible] 0 9 4

Date of Issue 0 8 1 [illegible] 8 1

# CALIFORNIA EXTREMELY HAZARDOUS WASTE DISPOSAL PERMIT

California Department of Health Services
Hazardous Materials Management Section

Pursuant to Section 66595, Title 22, Division 4, California Administrative Code, approval is granted to:

City of Glendale
Public Service Department
119 North Glendale Avenue
Glendale, CA 91206
William A. Fell-Gen. Mgr. Chief Eng.

Telephone No. 2 1 3 9 5 6 - [illegible] 0 7

County Los Angeles

| For Office Use Only | Co. No. | Site No. |
|---|---|---|
| | Hauler No. | |

to dispose of the wastes listed below subject to acceptance by:

Chancellor & Ogden
or
Falcon Disposal Service

Registered Hazardous Waste Hauler (Name and Address)

and

U.S. Ecology Inc.
or
Casmalia Disposal Site

Disposal Site (Name and Address)

Type of Disposal:

- ☐ Injection Well
- ☐ Ponding
- ☐ Treatment
- ☐ Spreading
- ☐ Recovery
- ☐ Other _____

☒ Burial – All wastes must be buried in their sealed containers upon arrival at the site. These containers must be placed with care to guard against rupture during the burial process.

☐ Additional disposal conditions are listed on the attached sheet.

*All handlers must be instructed in safety precautions for handling the materials to ensure worker and public safety.*

Description of Waste: *(additional wastes on following pages)*

| waste component | upper | lower | % | ppm | quantity | |
|---|---|---|---|---|---|---|
| Debris contaminated with polychlorinated biphenyl | | | | | total | unit |
| | | | | | | |
| | | | | | | |
| | | | | | | |
| | | | | | | |

*If this is for a one year permit, give yearly estimate*

| For Office Use Only | |
|---|---|
| unit code | component |
| | |
| | |
| | |
| | |

Description of Packaging, Containerization and Transport: Drums ☐, Cartons ☐, Bottles ☐, Tank Truck ☐, Other _____ ☐

*Packaging, containerization, and transport of the material shall be in accordance with Title 49, Code of Federal Regulations for hazardous materials, and with regulations of the California Highway Patrol, Title 13, California Administrative Code, for intrastate transport of hazardous materials.* and with Title 40, CFR, for PCBs.

Permit to be used on a one time basis . . . . . ☒

Permit to be used for a period of one year from date of issue until (expiration date) _____ ☐

*The producer shall be responsible for renewing permit before expiration date and for recording the Extremely Hazardous Waste "Permit Number" in the lower right corner of the California Liquid Waste Hauler Record accompanying the waste. If there are any questions, please contact:*

[illegible]

*Authorized Signature*

3-2094

# City of GLENDALE CALIFORNIA

PUBLIC SERVICE DEPARTMENT
WATER – LIGHT – POWER

119 North Glendale Ave.,
Glendale, CA 91206
Telephone: (213) 956-2107

August 17, 1981

Hazardous Materials Div.
AUG 19 1981
California Department of Health Services
LOS ANGELES

State Department of Health Service
Room 7012
107 South Broadway
Los Angeles, California 90012

Attention Carmelita Lampino

Reference: Request for Disposal Permit for Contaminated Material containing PCB

Gentlemen:

The Public Service Department of the City of Glendale requests a Disposal Permit for material contaminated with PCB as described as follows.

1. Rags, boots, shirts, pants, gloves, soil, brush and safestep sorbent material with sawdust.

All this contaminated material is deposited in 13 - 55 gallon steel drums type 17E completely sealed and labeled.

The Public Service Department of the City of Glendale will use the facilities of BKK Corporation of Wilmington, California, to transport these related materials to the authorized locations of U.S. Ecology, Beatly, Nevada, or to Casmelia, California. All 55 gallon steel drums are properly labeled "Caution Contains PCB" labels per EPA regulations.

Very truly yours

William H. Fell

WILLIAM H. FELL
General Manager and Chief Engineer

CS/nl

PERMIT NUMBER 2 - 1 2 2 0

Date of Issue 0 9 1 8 8 0

# CALIFORNIA EXTREMELY HAZARDOUS WASTE DISPOSAL PERMIT

California Department of Health Services
Hazardous Materials Management Section

Pursuant to Section 60267, Title 22, Division 4, California Administrative Code, approval is granted to:

William H. Fell - General Manager
City of Glendale
119 North Glendale Avenue
Glendale, California 91205

Telephone No. 2 1 3 9 5 6 - 2 1 0 7

County Los Angeles

For Office Use Only — Co. No. ____ Site No. ____ Hauler No. ____

...posal of the wastes listed below subject to acceptance by:

Falcon Disposal Service — Registered Hazardous Waste Hauler (Name and Address)

and

Casmalia Disposal Site — Disposal Site (Name and Address)

...Disposal:

- ☐ Injection Well
- ☐ Ponding
- ☐ Treatment
- ☐ Spreading
- ☐ Recovery
- ☐ Other ____

☒ Burial – All wastes must be buried in their sealed containers upon arrival at the site. These containers must be placed with care to guard against rupture during the burial process.

☐ Additional disposal conditions are listed on the attached sheet.

*All handlers must be instructed in safety precautions for handling the materials to ensure worker and public safety.*

...of Waste: *(additional wastes on following pages)*

| waste component | upper | lower | % | ppm |
|---|---|---|---|---|
| Capacitors containing | | | ☐ | ☐ |
| Polychlorinated Biphenyls | | | ☐ | ☐ |
| (PCB) and rags contaminated | | | ☐ | ☐ |
| with PCB. | | | ☐ | ☐ |
| | | | ☐ | ☐ |

quantity 5 total — 55-gal. unit

*(if this is for a one year permit, give yearly estimate)*

For Office Use Only

| unit code | component |
|---|---|
| | |
| | |
| | |
| | |

...of Packaging, Containerization and Transport: Drums ☒ Cartons ☐ Bottles ☐ Tank Truck ☐

Other ____

*...containerization, and transport of the material shall be in accordance with Title 49, Code of Federal Regulations for hazardous ... and with regulations of the California Highway Patrol, Title 13, California Administrative Code, for intrastate transport ... materials*, and with Title 40, CFR, for PCB's.

Permit to be used on a one time basis . . . . . .

Permit to be used for a period of one year from date of issue until (expiration date) ____

*The producer shall be responsible for renewing permit before expiration date and for recording the Extremely Hazardous Waste "Permit Number" in the lower right corner of the California Liquid Waste Hauler Record accompanying the waste. If there are any questions, please contact:* California Department of Health Services
Hazardous Materials Management Section
107 South Broadway, Room 7012
Los Angeles, California 90012

David F. Wong
Authorized Signature
David F. Wong

8019

City of GLENDALE CALIFORNIA

PUBLIC SERVICE DEPARTMENT
WATER – LIGHT – POWER

119 North [illegible]
Glendale, [illegible]
Telephone [illegible]

September 15, 1980

Hazardous Materials Management
SEP 1 [illegible]

Mr. Dave Wong
State Department of Health Service
HMMS Room 7012
107 South Broadway
Los Angeles, California 90012

Dear Mr. Wong:

Reference: Request for Disposal Permit for Capacitors Containing PCB

The Public Service Department of the City of Glendale requests a disposal Permit for various damaged high voltage capacitors containing PCB (Polychlorinated Biphenyl) and other materials contaminated with PCB as described as follows.

1. Three damaged leaker capacitors containing approximately two gallons of polychlorinated biphenyl each, and contaminated rags, deposited in a 55 gallon steel drum type 17E completely sealed.

2. Twelve damaged non-leaker capacitors containing approximately two gallons of polychlorinated biphenyl each, deposited in four 55 gallon steel drum type 17E completely sealed.

The Public Service Department of the City of Glendale will use the facilities of BKK Corporation of Wilmington, California, to transport these capacitors and related materials to the authorized location near Casmalia, California. All containers and capacitors are properly labeled with "Caution Contains PCB" labels per EPA regulations.

Very truly yours

WILLIAM H. FELL
General Manager and Chief Engineer

CS/nl

SUPERSEDES PERMIT #3-0459

PERMIT NUMBER 3 - 0 5 2 2

Date of Issue 1 1 0 8 7 9

# CALIFORNIA EXTREMELY HAZARDOUS WASTE DISPOSAL PERMIT

California Department of Health Services
Hazardous Materials Management Section



ursuant to Section 60267, Title 22, Division 4, California Administrative Code, approval is granted to:

Wm. H. Fell, General Mgr. & Chief Engineer
City of Glendale
Public Service Department
119 North Glendale Avenue
Glendale, CA 91206

Telephone No. 2 1 3 9 5 6 - 2 1 0 7

County Los Angeles

For Office Use Only — Co. No. ___ Site No. ___ Hauler No. ___

o dispose of the wastes listed below subject to acceptance by:

Falcon Disposal
3031 East I Street
Wilmington, CA 90744

Registered Hazardous Waste Hauler (Name and Address)

and

Casmalia Disposal
P.O. Box 5275
Santa Barbara, CA 93108

Disposal Site (Name and Address)

Type of Disposal:

- ☐ Injection Well
- ☐ Ponding
- ☐ Treatment
- ☐ Spreading
- ☐ Recovery
- ☐ Other

☒ Burial – All wastes must be buried in their sealed containers upon arrival at the site. These containers must be placed with care to guard against rupture during the burial process.

☒ Additional disposal conditions are listed on the attached sheet.

*All handlers must be instructed in safety precautions for handling the materials to ensure worker and public safety.*

Description of Waste: *(additional wastes on following pages)*

| waste component | upper | lower | % | ppm | quantity (total) | unit |
|---|---|---|---|---|---|---|
| 3 capacitors (damaged) containing | | | | | 1 | 55-gal. |
| 2 gallons of polychlorinated | | | | | | |
| biphenyls (PCB's) | | | | | | |

*(if this is for a one year permit, give yearly estimate)*

*For Office Use Only*

| unit code | component | | | |
|---|---|---|---|---|
| | | | | |
| | | | | |
| | | | | |
| | | | | |

Description of Packaging, Containerization and Transport: Drums ☒ Cartons ☐ Bottles ☐ Tank Truck ☐ Other ☐

*Packaging, containerization, and transport of the material shall be in accordance with Title 49, Code of Federal Regulations for hazardous materials, and with regulations of the California Highway Patrol, Title 13, California Administrative Code, for state transport of hazardous materials,* and with Title 40, CFR for PCB's.

Permit to be used on a one time basis ☐

Permit to be used for a period of one year from date of issue until (expiration date) ☐

*The producer shall be responsible for renewing permit before expiration date and for recording the Extremely Hazardous Waste "Permit Number" in the lower right corner of the California Liquid Waste Hauler Record accompanying the waste. If there are any questions, please contact:* Earl Margitan, Regional Coordinator, Southern California
California Department of Health Services
Hazardous Materials Management Section

Earl Margitan

fornia Department of Health Services
ardous Materials Management Section

PERMIT NUMBER 3 - 0 5 2 2

Date of Issue 1 1 0 8 7 9

# ALIFORNIA EXTREMELY HAZARDOUS WASTE DISPOSAL PERMIT

DITIONAL WASTES



scription of Waste:

| waste component | upper | lower | % | ppm | quantity | |
|---|---|---|---|---|---|---|
| One capacitor (leaking) containing | | | | | 1 (total) | 55-gal. (unit) |
| 2 gallons of PCB, plus PCB- | | | | | | |
| contaminated gloves, rags and | | | | | | |
| soil. | | | | | | |

(if this is for a one year permit, give yearly estimate)

For Office Use Only

| unit code | component | | | |
|---|---|---|---|---|
| | | | | |
| | | | | |
| | | | | |
| | | | | |

scription of Packaging, Containerization and Transport: Drums ☒, Cartons ☐, Bottles ☐, Tank Truck ☐, Other ☐

scription of Waste:

| waste component | upper | lower | % | ppm | quantity | |
|---|---|---|---|---|---|---|
| One capacitor (leaking) containing | | | | | 1 (total) | ea. (unit) |
| 2 gallons of PCB, plus PCB- | | | | | | |
| contaminated gloves, rags | | | | | | |
| and soil. | | | | | | |

(if this is for a one year permit, give yearly estimate)

For Office Use Only

| unit code | component | | | |
|---|---|---|---|---|
| | | | | |
| | | | | |
| | | | | |
| | | | | |

escription of Packaging, Containerization and Transport: Drums ☐, Cartons ☐, Bottles ☐, Tank Truck ☐, Other Sealed steel transformer tank ☒

escription of Waste:

| waste component | upper | lower | % | ppm | quantity | |
|---|---|---|---|---|---|---|
| 21 capacitors (non-leaking), | | | | | 21 (total) | capacitors (unit) |
| each containing approximately | | | | | | |
| 2 gallons of PCB. | | | | | | |

(if this is for a one year permit, give yearly estimate)

For Office Use Only

| unit code | component | | | |
|---|---|---|---|---|
| | | | | |
| | | | | |
| | | | | |
| | | | | |

Description of Packaging, Containerization and Transport: Drums ☐, Cartons ☐, Bottles ☐, Tank Truck ☐, Other Strapped to pallets ☒

Description of Waste:

| waste component | upper | lower | % | ppm | quantity | |
|---|---|---|---|---|---|---|
| | | | | | (total) | (unit) |

(if this is for a one year permit, give yearly estimate)

For Office Use Only

| unit code | component | | | |
|---|---|---|---|---|
| | | | | |
| | | | | |
| | | | | |
| | | | | |

Description of Packaging, Containerization and Transport: Drums ☐, Cartons ☐, Bottles ☐, Tank Truck ☐, Other ☐

Additional Instructions:

Revised December 1974

# CALIFORNIA LIQUID WASTE HAULER RECORD

STATE WATER RESOURCES CONTROL BOARD
STATE DEPARTMENT OF HEALTH

210- 000830

**PRODUCER OF WASTE (Must be filled by producer)**

Name (print or type): Public Service Dept, City of Glendale — Code No.: 9 1 2 0 1

Pick up Address: 800 (number) AIR WAY (street) GLENDALE (city)

Telephone Number: (213) 956-2143 P.O. or Contract No.:

Order Placed By: Public Service Dept. Date: 11-13-79

Type of Process which Produced Wastes: Electric Utility (Examples: metal plating, equipment cleaning, oil drilling – wastewater treatment, pickling bath, petroleum refining) — Code No.:

**DESCRIPTION OF WASTE (Must be filled by producer)**

Check type of wastes:

1. ☐ Acid solution
2. ☐ Alkaline solution
3. ☐ Pesticides
4. ☐ Paint sludge
5. ☐ Solvent
6. ☐ Tetraethyl lead sludge
7. ☐ Chemical toilet wastes
8. ☐ Tank bottom sediment
9. ☐ Oil
10. ☐ Drilling mud
11. ☐ Contaminated soil and sand
12. ☐ Cannery waste
13. ☐ Latex waste
14. ☐ Mud and water
15. ☐ Brine

☑ Other (Specify): High Voltage Capacitors — Code No.:

Components: (Examples: Hydrochloric acid, lime, caustic soda, phenolics, solvents (list), metals (list), organics (list), cyanide)

| | | Concentration: Upper | Lower | % | ppm |
|---|---|---|---|---|---|
| 1. | PCB | | | | |
| 2. | | | | | |
| 3. | | | | | |
| 4. | | | | | |
| 5. | | | | | |
| 6. | | | | | |

Hazardous Properties of Waste: pH ____ ☐ none ☒ toxic ☐ flammable ☐ corrosive ☐ explosive

Bulk Volume: ____ ☐ gal ☐ tons ☐ barrels (42 gal.) ☐ other (specify)

Containers: 26 capacitors (number) ☐ drums ☐ cartons ☐ bags ☐ other (specify)

Physical State: ☑ solid ☑ liquid ☐ sludge ☐ other (specify)

Special Handling Instructions (if any): Avoid contact with Skin

The waste is described to the best of my ability and it was delivered to a licensed liquid waste hauler (if applicable).

I certify (or declare) under penalty of perjury that the foregoing is true and correct.

L. Sigaard E. Assoc.
SIGNATURE OF AUTHORIZED AGENT AND TITLE

**HAULER OF WASTE (Must be filled by hauler)**

FALCON DISPOSAL SERVICE — Code No.:
3031 East "I" Street, Wilmington, California 90744
Phone: (213) 830-7662

Pick Up: 11-13-79 (date) Time: 1 pm

State Liquid Waste Hauler's Registration No. (if applicable): 210

Job No.: 4-08376 No. of Loads or Trips: 1 Unit No. 801c

Vehicle: ☐ vacuum truck ____ barrels, ☑ flatbed, ☐ other (specify)

The described waste was hauled by me to the disposal facility named below and was accepted.

I certify (or declare) under penalty of perjury that the foregoing is true and correct.

Douglas E. Tate
SIGNATURE OF AUTHORIZED AGENT AND TITLE

**DISPOSER OF WASTE (Must be filled by disposer)**

Name (print or type): ____ Code No.:

Site Address:

The hauler above delivered the described waste to this disposal facility and it was an acceptable material under the terms of RWQCB requirements, State Department of Health regulations, and local restrictions.

Quantity measured at site (if applicable): ____ State fee (if any):

Handling Method(s):

☐ recovery

☐ treatment (specify): (EXAMPLES: INCINERATION, NEUTRALIZATION, PRECIPITATION) — Code No.:

☐ disposal (specify): ☐ pond ☐ spreading ☐ landfill ☐ injection well

☐ other (specify): — Code No.:

If waste is held for disposal elsewhere specify final location:

Disposal Date:

I certify (or declare) under penalty of perjury that the foregoing is true and correct.

SIGNATURE OF AUTHORIZED AGENT AND TITLE

The site operator shall submit a legible copy of each completed Record to the State Department of Health with monthly fee reports.

FOR INFORMATION RELATED TO SPILLS OR OTHER EMERGENCIES INVOLVING HAZARDOUS WASTE OR OTHER MATERIALS CALL (800) 424-9300.

# SERVICE ORDER

NO. 4-08376

BKK CORPORATION
CORPORATE OFFICES
3031 EAST "I" STREET
WILMINGTON, CALIF. 90744
(213)-775-3607

- BKK LANDFILLS
- RESOURCES II
- FALCON DISPOSAL
- CHANCELLOR & OGDEN
- BKK CO. OF NEVADA INC.

— 24 HR. SERVICE —
(213) 432-8461

DATE 11-13-79

CUSTOMER City of Solendale NO. _____ ORDER NO. _____
BILLING ADDRESS 119 North Solendale Ave JOB LOCATION 800 Airway
Solendale Calif Solendale

SERVICES PERFORMED Picked up 3 55LB Drums with 4 capacitors + 1 capacitor tank + 21 capacitors on Pallets
Total weight 2961 lbs

NO. OF LOADS 1 WHERE DISPOSED Casmalia Disposal Santa Barbara WASTE HAULERS NO. 210-000833
(IF CLASS I, DESCRIBE) P.C.B'S

TRUCK NO. 801 CAPACITY _____ TYPE CONTAINER _____ NO. _____
START 12:00 P M. STOP _____ M. GROSS TIME _____ HOURS
MEALS _____ M. TO _____ _____ HOURS
TIME DEDUCTIONS _____ _____ HOURS
DRIVER [illegible] 41017 NET TIME _____ HOURS
HELPER [illegible] 41014
ASHWORTH
RECEIVED BY [signature]

OFFICE USE ONLY

(TRANS. RATE) DUMP PRICE _____ H.W.T. _____
RATE PER HOUR _____ _____ WASHOUT _____
RATE PER LOAD _____ _____ SURCHR _____

CAPACITOR BANK #77S [redacted] DATE STORED FOR DISPOSAL

| DATE | [redacted] | WAFFER SERIAL # | CO[redacted]N | |
|---|---|---|---|---|
| Removed | Make | | | |
| FROM | | | | |
| SERVICE | | | | |
| 4-3-80 | GE | J200296 X | Leaking | 4-7-80 |
| | | J200278 | | |
| | | J200272 | | |

CAPACITOR BANK #71S [redacted] DATE STORED FOR DISPOSAL

| DATE | [redacted] | WAFFER SERIAL # | CONDITION | |
|---|---|---|---|---|
| Removed | | | | |
| FROM | | | | |
| SERVICE | MAKE | | | |
| | GE | J304080 | | |
| | | J200318 | | |
| 1-21-80 | | J200287 X | Shorted | 1-22-80 |
| | | | | " |

CAPACITOR BANK #79S [redacted] DATE STORED FOR DISPOSAL

| DATE | [redacted] | WAFFER SERIAL # | CONDITION | |
|---|---|---|---|---|
| Removed | Make | | | |
| FROM | | | | |
| SERVICE | GE | | | |
| 3-18-80 | | J304089 | ~~Shorted~~ | ~~3-19-80~~ |
| | | J200331 X | Shorted | 3-19-80 |
| | | J200334 | | " |

RWQCB

# SPECIAL REPORT

Submitted to:

California Regional Water Quality Control Board
Los Angeles Region

By:

Public Service Department
City of Glendale, California

November 1972

Prepared by:

Engineering-Science, Inc.
150 E. Foothill Blvd.
Arcadia, California

RWQCB

## TABLE OF CONTENTS


| | | Page |
|---|---|---|
| Letter of Transmittal | | ii |
| CHAPTER I | INTRODUCTION | I-1 |
| | Scope of the Report | I-1 |
| | Definition of the Problem | I-1 |
| CHAPTER II | THE RECOMMENDED PROGRAM | II-1 |
| | Introduction | II-1 |
| | Program Description | II-1 |
| | Reports | II-3 |
| CHAPTER III | SUMMARY | III-1 |
| APPENDIX A | WASTE DISCHARGE REQUIREMENTS (File 71-43) | |


## LIST OF TABLES


| Table | Title | Page |
|---|---|---|
| I-1 | Generating Station Waste Discharge Approximate Flows | I-4 |
| I-2 | Generating Station Waste Discharge Approximate Quality | I-5 |
| I-3 | Chemical Additives | I-5 |


## LIST OF FIGURES


| Number | Title | Page |
|---|---|---|
| I-1 | Plot Plan | I-3 |
| II-1 | Activity Diagram | II-4 |

RWQCB

# CHAPTER I

## INTRODUCTION

By a letter from Mr. Raymond M. Hertel, Executive Officer of the California Regional Water Quality Control Board - Los Angeles Region (LARWQCB) to the City of Glendale, Public Service Department (PSD), dated September 18, 1972, the PSD was issued Waste Discharge Requirements for boiler blowdown and for cooling tower washdown water from the L. W. Grayson Steam Electric Generating Station. These streams are currently being discharged to the Verdugo Wash near the confluence with the Los Angeles River. Included in this action by the LARWQCB are requirements for routine monitoring of effluent and of the receiving waters. Also required is submittal of this Special Report.

On 25 October 1972 the PSD retained Engineering-Science, Inc. (ES) to (1) advise the PSD as to procedures required to comply with the prescribed effluent and receiving water monitoring program, and (2) to prepare the Special Report for PSD's submittal.

### SCOPE OF THE REPORT

This report summarizes, in the following section, quantities and qualities of steam plant effluent to the extent that these parameters are known at the present time. Further data on both effluent quantity and quality will be made available through the effluent and receiving water monitoring program which is underway and which is described in Chapter II.

A timetable for complying with established waste discharge requirements is also presented in Chapter II. This schedule of activities is firm insofar as activities under the control of the PSD and its consultants are concerned.

The previously cited Waste Discharge Requirements (File 71-43) are included as Appendix A.

### DEFINITION OF THE PROBLEM

The L. W. Grayson Steam Electric Generating Plant is located immediately to the north of the confluence of the Los Angeles River and

Verdugo Wash, one of the River's many tributaries. Both watercourses have been improved and flood waters in both are partially regulated by upstream structures.

As indicated on Figure I-1, discharges of untreated and unmetered industrial wastes are made to both watercourses. A continuous discharge is released from the steam electric generating station at Point A and is piped underground to the Wash at Point D. This effluent consists of cooling tower blowdown, boiler blowdown, pump gland leakage, boiler drainage, and other minor leakages and system water losses. Discharge flow rates vary in response to the rate of generation of electric power and reflect the quantity of cooling water put through the system and the number of pieces of primary generating equipment and auxiliary equipment which are in service.

Raw water from which this effluent is derived is mainly withdrawn from the underground basin by two pumps located on the generating plant site: supplemental water is obtained from the City system during periods of high demand. Chemical constituents are those present in the raw water, concentrated through evaporation, plus sulphuric acid, sodium hexametaphosphate, Nalco No. 382 (a polymer of unknown composition used for feed water conditioning), and chlorine for algae control in cooling tower basins. In addition, minor amounts of trisodium phosphate, sulphite, and amine are added to boiler water. Flow rates, water quality data, and chemical addition as presently estimated are presented in Tables I-1, I-2, and I-3 respectively.

Although preliminary calculations indicate that maximum allowable mass emission rates as indicated in Table I of Discharge Requirements (Appendix A) are not exceeded, evaporation of raw water causes final concentrations of certain individual parameters to exceed allowable values. The most feasible alternative for treatment and/or disposal of the waste discharge will be identified through conduct of preliminary engineering studies, further described in Chapter II.

In addition to this continuous waste discharge, periodic discharges of cooling tower basin storage and basin washdown water are made to both adjacent watercourses. These wastes originate at five cooling towers and, as shown on Figure 1, are discharged at Points D and E. Cooling

RWQCB

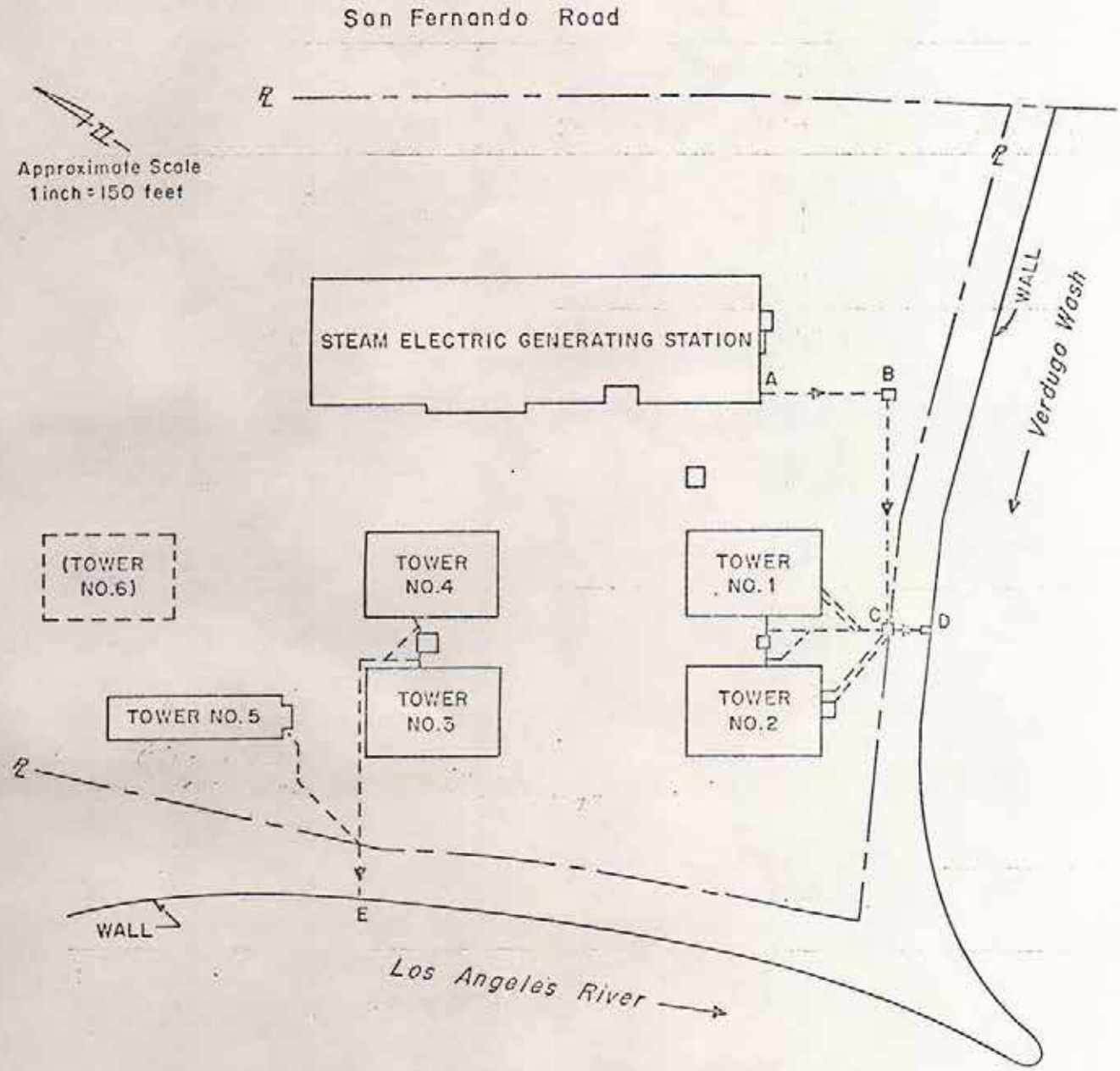


PLOT PLAN

CITY OF GLENDALE, PUBLIC SERVICE DEPARTMENT
L.W. GRAYSON STEAM ELECTRIC GENERATING PLANT

ENGINEERING-SCIENCE, INC.

RWQCB

TABLE I-1

GENERATING STATION WASTE DISCHARGE
APPROXIMATE FLOWS(1)

| Item | Quantity (mgd) Maximum | Average | Minimum |
|---|---|---|---|
| RAW WATER | | | |
| Groundwater | | 1.93 | |
| Municipal System | | .07 | |
| Total | | 2.00 | |
| WATER USAGE | | | |
| Cooling | | 1.984 | |
| Boiler Feed | | .010 | |
| Sanitary | | .006 | |
| Total | | 2.000 | |
| DISCHARGES/LOSSES | | | |
| Evaporation | | 1.392 | |
| Sanitary Sewers | | 0.008 | |
| Watercourses | | 0.600(2) | |
| Total | | 2.000 | |

(1) Reported 29 June 1971.
(2) Reported as 600,500 gallons per day 19 May 1972.

RWQCB

TABLE I-2

GENERATING STATION WASTE DISCHARGE
APPROXIMATE QUALITY

| Constituent | | Reported 19 August 1972 | | | Reported 27 July 1972 | | |
|---|---|---|---|---|---|---|---|
| | | Main Tower | | | Main Tower | | |
| | | 1&2 | 3&4 | 5 | 1&2 | 3&4 | 5 |
| Hardness | ppm | 750 | 1,600 | 1,576 | 940 | 1,580 | 1,636 |
| Hardness (Ca) | ppm | 512 | 1,100 | 1,080 | 668 | 1,100 | 1,140 |
| TDS | ppm | 1,290 | 2,650 | 2,640 | 1,570 | 2,820 | 2,310 |
| pH | | 7.2 | 7.35 | 7.00 | 7.2 | 7.3 | 7.5 |
| $PO_4$ (ortho) | ppm | 11.7 | 4.0 | 3.0 | 9.7 | 2.4 | 3.2 |
| $PO_4$ (poly) | ppm | 6.3 | 2.0 | 0.7 | 10.8 | 1.1 | 2.1 |
| $PO_4$ (total) | ppm | 18.0 | 6.0 | 3.7 | 20.5 | 3.5 | 5.3 |

TABLE I-3

CHEMICAL ADDITIVES(1)

| Chemical | Dosage Rate | |
|---|---|---|
| | Pounds Per Year | Parts Per Million |
| TO COOLING TOWER WATER (1.984 mgd) | | |
| Sulphuric acid | 60,000 | 9.9 |
| Sodium hexametaphosphate | 14,000 | 2.3 |
| Nalco No. 382 | 22,000 | 3.6 |
| Chlorine | 30,000 | 5 |
| TO BOILER WATER (0.010 mgd) | | |
| Trisodium phosphate | 100 | 3.3 |
| Sulphite | 150 | 4.9 |
| Amine | 36 | 1.2 |

(1) Reported 19 May 1972.

RWQCB

tower basins are approximately two feet deep and range in size up to 80 by 120 feet. As water is circulated through the towers a small amount of particulate matter is washed from the air with the insoluble fraction settling out in the basin. These basins are drained and washed down with a fire hose at varying intervals of time ranging from six months to one year: the cleaning operation is conducted at times of low power demand, when generators are out of service, and is therefore not routinely scheduled. A single tower washdown may discharge as much as 200,000 gallons in a four-hour period (an average of 830 gallons per minute). Quality of this waste is the same as that waste discharged from the generating station, with the addition of undetermined quantities of settleable solids as previously described.

RWQCB

# CHAPTER II

## THE RECOMMENDED PROGRAM

### INTRODUCTION

Chapter I has defined the primary problem concerning discharge of industrial waste to the Los Angeles River from the L. W. Grayson Steam Electric Generating Station. There are two possible approaches to solving the problem. First, it is possible to treat the waste to a quality level acceptable for discharge into the Los Angeles River. Alternatively, with construction of appropriate facilities, the waste could be discharged to the City of Glendale sanitary sewer system with little or no pretreatment. The latter alternative must include assurance that the peak flow will not overtax the existing sewer capacity. On the other hand, if the waste stream is treated, an acceptable method must be found for disposal of the resultant concentrated brines and solids. These may or may not be acceptable for sewer discharge although the volume would be considerably less than the original flow rate.

Preliminary engineering and evaluation will be required to recommend the most feasible alternative solution. Either of the two basic approaches offers many subalternatives which must be evaluated for their short and long term impact on the local and regional environment and economy.

With due consideration of the above, the Public Service Department (PSD) is presenting this constructive program for optimizing solutions to the problem.

### PROGRAM DESCRIPTION

The PSD proposes to conduct a corrective action program to result in compliance with the Waste Discharge Requirements outlined by the California Regional Water Quality Control Board, Los Angeles Region (LARWQCB) Order No. 72-52. It is proposed that this program be conducted in three phases. Phase I, which consisted of development of a proposed action program, has already been essentially completed as represented by this Special Report. A description of the entire program is as follows:

Phase I (Completed)

(a) The City has retained Engineering-Science, Inc. as a consultant for problem analysis, recommendations and assistance in the preparation of the required report and monthly progress reports.

(b) The City has retained Bio-Technics Laboratories, Inc., a consulting laboratory service, for effluent and receiving water monitoring and preparation of required monthly reports.

(c) The City has requested listing of the project on the 1973-74 Project List.

Phase II

(a) The City will retain an engineering consultant to perform preliminary engineering design and evaluation and to prepare the Project Report for LARWQCB and Environmental Protection Agency (EPA) approval.

Phase III

(a) The City will retain an engineering consultant to perform the detailed treatment and/or disposal facilities design, prepare plans and specifications, and prepare an Operation and Maintenance Manual draft for LARWQCB and EPA review and approval for funding.

(b) The City will advertise for bids from capable and responsible contractors.

(c) The City will evaluate bids with assistance from the consultant.

(d) The City will award a construction contract to the lowest responsible bidder.

(e) The City or the consultant will provide on site inspection during construction and will provide contract administration assistance throughout the contract.

(f) The consultant will provide plant start-up assistance and operator training.

(g) The consultant will prepare "as-built" drawings and complete final Operation and Maintenance (O&M) Manuals for LARWQCB approval.

(h) The City will submit the facilities for LARWQCB inspection and acceptance.

(i) The consultant will prepare revisions to the O&M Manual when and as indicated as the result of the City's operating experience. Revisions will be forwarded to the LARWQCB for use in its first annual plant inspection.

A schedule and activity diagram for this program is presented as Figure II-1. The schedule shown is believed to be realistic based on information available at this time; however, because the exact nature of the processes and/or equipment required to comply with the discharge requirements will not be known until the preliminary engineering (Phase II) is completed, the program cannot be finalized. .Recognition has been made of established deadlines for submission of certain documents and an allowance has been made for review by the appropriate agencies.

REPORTS

The City, as indicated on Figure II-1, will provide required monthly, quarterly, and annual reports in conformance with the Monitoring and Reporting Program (File 71-43) with necessary additional monthly reports on the progress of the project. These reports will include a narrative discussion of actions and accomplishments for the period and a projection for the following period and will also include any required revisions to the Activity Diagram (Figure II-1 .

## CHAPTER III

## SUMMARY

(1) The City has and will retain further adequate professional engineering consultation to apply responsible current technology to the solution of the problem of meeting the specified waste discharge requirements.

(2) Positive corrective action has been taken in the form of a proposed program and timetable for the design, construction, and operation of facilities to correct the present discharge to allowable limits. Preliminary engineering will commence upon acceptance of this report; plans, specifications, and manuals will be submitted for approval by 1 May 1973 or sooner. Construction will commence by 1 November 1973 and will be completed, with the facilities in operation, by 1 July 1974 or sooner.

(3) All required monitoring and reporting programs will be carried out in compliance with the requirements set forth by the Los Angeles Regional Water Quality Control Board.

(4) Monthly reports of program progress will be prepared and submitted.

MH E94-0049
109.0756

FUGRO-McCLELLAND (WEST), INC.

# ENVIRONMENTAL AUDIT
# CITY OF GLENDALE
# GRAYSON POWER PLANT
# 634 BEKINS WAY
# GLENDALE, CALIFORNIA

Prepared for:
CALIFORNIA REGIONAL WATER QUALITY CONTROL BOARD
LOS ANGELES REGION

On Behalf of:
CITY OF GLENDALE
PUBLIC SERVICE DEPARTMENT

January 1994

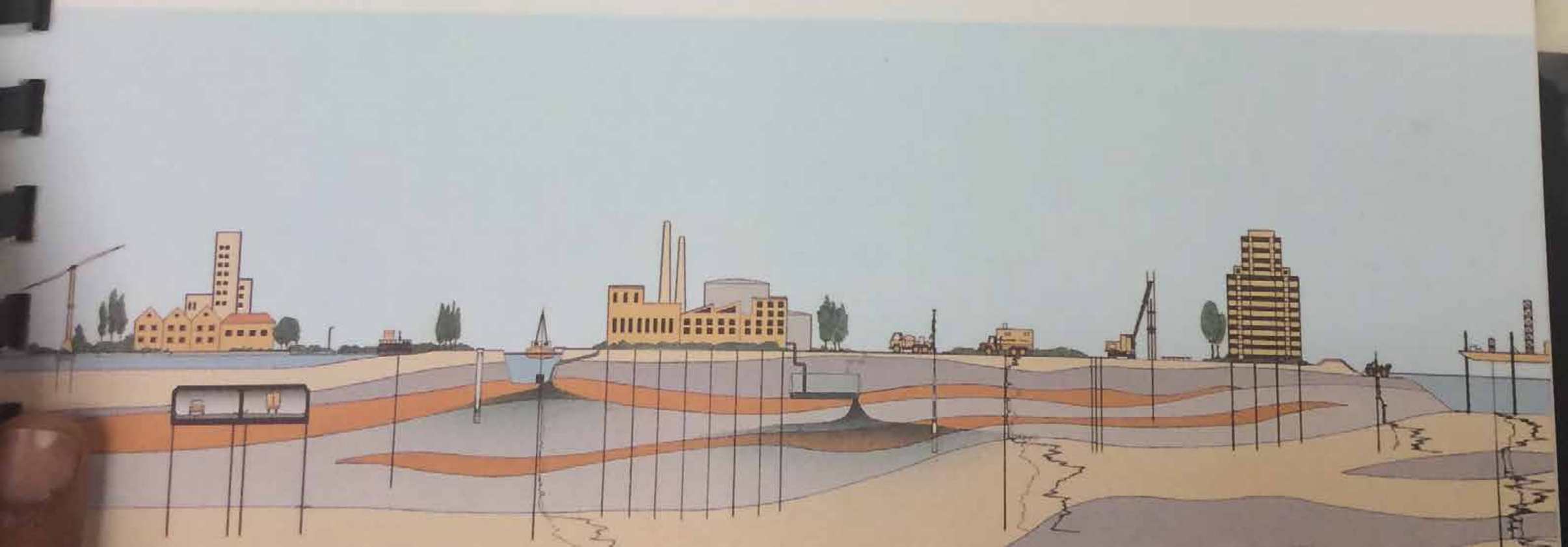

**FUGRO WEST, INC.**

5855 Olivas Park Drive
Ventura, CA 93003-7672
**Tel: (805) 650-7000**
Fax: (805) 650-7010

January 28, 1994
Project No. 93-36-7151

California Regional Water Quality Control Board
Los Angeles Region
101 Centre Plaza Drive
Monterey Park, California 91754

Attention: Mr. Greg Kwey
Senior Water Resource Control Engineer

**Environmental Audit**
**City of Glendale Grayson Power Plant**
**634 Bekins Way**
**Glendale, California**

Dear Mr. Kwey:

Fugro-McClelland is pleased to present this report on the environmental audit at the City of Glendale Grayson Power Plant. The purpose of this audit was to establish a preliminary history of activities at the site and to identify the uses and assess the handling practices of environmentally regulated substances at the site. This audit has been completed in conjunction with subsurface soils and ground water sampling of the facility, the results of which are summarized in our report entitled *Subsurface Soils and Hydrogeologic Investigation, Grayson Power Plant*, dated January 28, 1994.

If you have any questions or comments, please call our office.

Sincerely,
FUGRO-McCLELLAND (WEST), INC.

Lisa R. Doran
Staff Environmental Professional

Perry W. Russell, R.G., C.E.G.
Project Geologist

LRD/PWR:gs
c: Mr. Nicolas P. Cruz, P.E., City of Glendale Public Service Department

## EXECUTIVE SUMMARY

At the request of the City of Glendale, Fugro-McClelland (West), Inc., conducted an environmental audit at Grayson Power Plant, located at 634 Bekins Way, Glendale, California (subject site). The purpose of the audit was to establish a preliminary history of activities at the subject site and to identify the use and assess the handling practices of environmentally regulated substances at the subject site. The audit included a public records review (including aerial photographs and files) and site reconnaissance. Conclusions and recommendations are given at the end of this report.

The subject site is a 12-acre, rectangular piece of property upon which a steam electric generation plant has been constructed. No evidence was found describing activities at the subject site prior to 1927. Based on available public records and documentation reviewed, it appears that the subject site was vacant and unimproved in 1927. The site apparently remained vacant until the initial portion of the current Grayson Power Plant facility was constructed in approximately 1934.

The subject site is located at an approximate elevation of 440 feet above mean sea level. The subject site and surrounding areas to the north, south and east of the site slope gently to the southwest. However, the Santa Monica Mountains (Griffith Park) rise abruptly to the west of the site, across both Interstate 5 and Highway 134. Drainage at the subject site is by overland flow to the Verdugo Wash storm drainage system, which divides the southern portion of the site. The Verdugo Wash empties into the Los Angeles River, located adjacent to the west of the site. The hydrologic gradient is towards the south-southeast. Based on wells installed by Fugro-McClelland on the subject site, the ground water flows in a south-southeasterly direction.

Based on the public records review and site reconnaissance, the following areas of environmental concern were noted:

### Subject Site Activities

According to interviews of Grayson Power Plant personnel, an incident apparently occurred approximately 8 to 10 years ago in which an insulator blew out in one of the transformers located in the southwestern portion of the switch transfer yard. According to Mr. Richard Wilson, an employee at the subject site, the incident caused the breaker to explode, resulting in a release of mineral oil to the immediate area of the transformer location. Also according to Mr. Wilson, the mineral oil did not contain polychlorinated biphenyls (PCBs). Unless available records can document the use, at the time of the incident, of biodegradable mineral oil, the released mineral oil may have impacted the subject site. This portion of the subject site has not been assessed as to the extent of possible contamination.

The hazardous waste storage area located near abandoned tank farm Nos. 6 and 7, does not currently have a containment barrier to prevent either vertical or lateral migration of potential contamination should an incident occur. The area is asphalt paved which does not prevent vertical movement of potential contamination. Nor does it contain a concrete berm to prevent lateral migration of potential contamination. In addition, the area is not covered to protect stored waste from the elements.

Sulfuric acid storage tank No. 1 has a capacity of 3,300 gallons. The tank is located approximately 15 feet above the ground and is supported by concrete blocks. Although the tank has both secondary and tertiary curbing surrounding it, the containment measures do not appear to be adequate if a significant seismic event or a vehicle crash were to occur. If this were to happen, the tank itself or its contents could potentially fall outside of the bermed area and potentially impact the subject site.

Documented petroleum hydrocarbon releases on the subject site include areas surrounding UST No. 9, abandoned tank farm Nos. 6 and 7, and removed tank farms No. 8. Although both wells and borings have been installed and contamination documented, the extent of that contamination was not delineated prior to initiation of the subsurface assessment associated with this report. Additional soil and ground water sampling completed for this assessment will contribute in assessing the extent of contamination.

Underground fuel bunker Nos. 1, 2, 3, and 4 have not been closely assessed for potential releases. However, a letter from the Regional Water Quality Control Board (RWQCB) to the City of Glendale, dated June 3, 1992, indicated that it is not cost effective to install the number of test borings needed to adequately assess the lateral and vertical extent of contaminants beneath these tanks. Therefore, the RWQCB requested that a sufficient number of ground water monitoring wells be installed to determine whether waste discharges from these units have impacted ground water resources beneath the facility. These wells were installed as part of our subsurface assessment completed in conjunction with this audit.

Subsurface soil sampling along fuel product lines has been completed, by Fugro and ENSR, at various locations throughout the facility. However, the low density sampling interval completed along the pipeline alignments did not thoroughly characterize the potential for subsurface contamination along the alignments. In addition, potential subsurface contamination has not been assessed in the vicinity of the waste water lines leading to the blowdown pump station, located adjacent to fuel oil storage tank No. 5, and the line leading from the blowdown pump station to the temporary holding facility, located adjacent to cooling tower No. 2.

## Adjacent Subject Site Activities

The City of Glendale Public Service Corporate Yard, located adjacent to the subject site to the north, is listed twice on the Leaking Underground Storage Tank (LUST) listing. This site is located potentially upgradient of the subject site and has a significant potential to impact the subject site. The importance of identifying a potential offsite contributor to potential contamination is important given that petroleum hydrocarbon contamination has been documented on the subject site.

# INTRODUCTION

## Purpose and Scope of Services

At the request of the City of Glendale, Fugro-McClelland (West), Inc., conducted an environmental audit at the Grayson Power Plant, located at 634 Bekins Way, Glendale, California (subject site). The purpose of the audit was to establish a preliminary history of activities at the subject site and to identify the use and assess the handling practices of environmentally regulated substances at the subject site. This study was authorized by the City of Glendale, in an agreement dated September 15, 1993. The audit includes a public records review and site reconnaissance. Conclusions and recommendations are given at the end of this report.

# ENVIRONMENTAL SETTING

## Site Location and Description

The subject site consists of the grounds and buildings located at 634 Bekins Way, Glendale, California. The approximate location is shown on Plate 1 - Site Vicinity Map. A detailed site plan is presented on Plate 2 - Site Map, Previous Sampling Locations.

The subject site is located northeast of the intersection of Interstate 5 and Highway 134 (Ventura Freeway) in Glendale. A railroad right-of-way forms the eastern boundary of the site, beyond which is San Fernando Road. The Los Angeles River forms the western boundary. Contiguous with the site to the north is the Glendale Public Service Corporate Yard. The Verdugo wash separates the main power plant site from a phosphate removal plant and the underground fuel oil bunker No. 9 to the south. Beyond the phosphate removal plant and the underground fuel oil bunker is Highway 134, which forms the southern boundary of the site. Highway 134 is elevated on a bridge. The land below the bridge adjacent to the south edge of the subject site is used for materials storage by Caltrans and private entities.

Adjacent properties to the east of the subject site across San Fernando Road include the following commercial properties:

| Facility Name | Facility Address | Type of Business |
|---|---|---|
| Armstrong Garden Center | 5816 San Fernando Road | garden supplies |
| Bargain Fuel/A.T. Auto & Liquor Store | 5800 San Fernando Road | gas station, auto repair, and liquor store |
| Old Republic Title Company | 5744 San Fernando Road | title company |
| Galleria Car Wash | 5720 San Fernando Road | car wash |
| Vacant lot (former gas station) | 5700 San Fernando Road | vacant lot |
| School | 5636 San Fernando Road | school |
| Luigi's Statuary | 5630 San Fernando Road | statuary |
| Vacant lot | Southeast corner of San Fernando Road and Fairmont Avenue | vacant lot |

### Topography and Drainage

The subject site is located at an approximate elevation of 440 feet above mean sea level. The subject site and surrounding areas to the north, south and east of the site slope gently to the southwest. However, the Santa Monica Mountains (Griffith Park) rise abruptly to the west of the site, across both Interstate 5 and Highway 134. Drainage at the subject site is by overland flow to the Verdugo Wash and the Los Angeles River. The Verdugo Wash divides the southern portion of the site and empties into the Los Angeles River, located adjacent to the west of the site. The hydrologic gradient is towards the south-southeast.

## HISTORICAL SITE CONDITION

Based on the review of documentation, the following history of the subject site has emerged. No evidence was found describing activities at the subject site prior to 1927. Based on available public records and documentation reviewed, it appears that the subject site was vacant and unimproved in 1927. The site apparently remained vacant until construction of the current Grayson Power Plant facility began in approximately 1934.

### Historical Aerial Photographs

Historical aerial photographs of the subject site on file with the Fairchild Collection at Whittier College were reviewed by Fugro-McClelland on October 29, 1993. Photographs from

the years 1927, 1934, 1939, 1941, 1947, and 1957 were reviewed. Following, are Fugro-McClelland's observations by date of photograph:

| | | |
|---|---|---|
| August 1927 | No. C-113;224 | The subject site is vacant and unimproved. Adjacent properties are likewise vacant and unimproved. Proximal properties include an airport, located approximately 0.1 mile north-northwest of the subject site. |
| 01-12-34 | No. C-2878;17 | The subject site appears to be under construction. The site is graded and piping appears to be stacked on the graded areas. A dirt road appears to be leading to the Los Angeles River, and is located adjacent to the north of the subject site. With the exception of the above-mentioned roadway, adjacent and surrounding properties do not appear to have significantly changed. |
| January 1939 | No. C-5526:40 | The subject site has a few, small buildings on the northern and southwestern portions of the lot. Piping still appears to be stacked on the site. The Los Angeles River has been constructed with a concrete channel. There appear to be no significant changes to adjacent and proximal properties with the exception of a commercial nursery, which occupies the site located across San Fernando Road between Highland and Kellogg Avenues. |
| 09-25-41 | No. C-7444;39 | The subject site appears to be partially constructed. The first portion of the boiler and turbine room is constructed, as is a portion of the switch transfer yard. The prior water softening plant is present, as is cooling tower No. 1 and a partially constructed cooling tower No. 2. The northern portion of the subject site still contains stacks of construction piping and apparent construction housing. Significant changes to the adjacent and proximal properties are not apparent with the following exception: an apparent gas station is present on the southeast corner of San Fernando Road and Kellogg Avenue. |
| 08-22-47 | No. C-11703 | There does not appear to be significant changes in site-specific land usage from the 1941 photograph. Adjacent properties located across San Fernando Road include two additional gas and oil facilities. They are an apparent |

service station, located on the northeast corner of San Fernando Road and Grange Street, and Pacific Lighting and Gas Supply, located just east of the southeast corner of San Fernando Road and Fairmont Avenue. Three other small commercial buildings occupy areas adjacent to the subject site along the eastern portion of San Fernando Road between Kellogg and Fairmont Avenues.

09-27-57 No. C-22910 An northern wing has been added to the boiler/turbine room and another building is under construction next to cooling tower No. 3 on the subject site. There does not appear to be significant changes in surrounding land usage from the 1947 photograph.

**Historical Sanborn Fire Insurance Maps**

Fugro-McClelland reviewed Sanborn Maps of the subject site at the City of Los Angeles Public Library. The subject site was included on Volume 2 of the Sanborn Map collection dated 1949, and addended on the same volume in 1952 and 1959.

The subject site is occupied by the City of Glendale Steam Plant. Three boilers and turbines are observed on the map in addition to three large cooling towers, one small cooling tower, two pump houses, a 22-foot-high steel tank containing fuel oil, another 22-foot-high steel tank containing distilled water, a reserve oil tank, a switch and transfer yard, and a water softening plant. The water softening plant contains one concrete salt pit, one concrete softening tank, one concrete brine tank and seven aboveground tanks. The contents of the seven tanks were not labelled on the map. An oil unloading spur-track exits from the existing railroad tracks between the steam plant and San Fernando Road. It enters the northernmost portion of the turbine room and apparently unloads via conveyor tracks, which were labelled on the map.

Adjacent properties to the east across San Fernando Road include: Kellogg Woodworking, located on the southeast corner of Kellogg Avenue and San Fernando Road; a nursery located south of the woodworking facility; a gas and oil facility, located on the southeastern corner of Highland Avenue and San Fernando Road at 5744 San Fernando Road; an auto laundry located south of the gas and oil facility at 5720 San Fernando Road; another gas and oil facility located on the northeast corner of Grange Avenue and San Fernando Road at 5700 San Fernando Road; a small, apparently commercial structure is located on the southeastern corner of San Fernando Road and Grange Avenue at 5636 San Fernando Road; a Southern California Gas Company metering station and Pacific Lighting and Gas Supply Company occupy the corner lot between Doran Street and Fairmont Avenue along San Fernando Road.

# CALIFORNIA REGIONAL WATER QUALITY CONTROL BOARD
# LOS ANGELES REGION - WELL INVESTIGATION PROGRAM
# SITE AUDIT QUESTIONNAIRE

On November 8, 1993, Ms. Lisa R. Doran and Mr. Gerald A. Hels of Fugro-McClelland performed a visual reconnaissance of the subject site. Mr. Nick P. Cruz, Mechanical Engineer for the City of Glendale, was present during the site reconnaissance. During the site reconnaissance, Fugro-McClelland interviewed Mr. Larry Morehouse, Grayson Power Plant Superintendent, Mr. Tom Jordan, Grayson Power Plant Maintenance Supervisor, and Mr. Ron Lew, Grayson Power Plant Senior Operator. Mr. Morehouse has been associated with the Grayson Power Plant since 1988, Mr. Jordan since 1966, and Mr. Lew since 1965.

## I. GENERAL DESCRIPTION OF SITE

Describe the physical characteristics of the site, including, but not limited to, the following:

A. Changes in physical plant (e.g., tanks, degreasers, pipelines, clarifiers/sumps/septic tanks installed or removed).

1. Describe these changes, giving date, nature of change, and location.

- A water softening plant located between cooling tower No. 1 and power block No. 1 was removed and replaced between 1950 and 1960. It included 1 concrete brine tank, 1 concrete softening tank, 1 concrete salt pit, 3 water tanks and 4 "softening plant" tanks. This area was replaced by 2 reverse osmosis tanks, 4 demineralizing water tanks (tank Nos. 8a, 8b, 8c and 8d), and 4 demineralizing water tanks with added morpholine for pH adjustment (tank Nos. 1a, 1b, 2, and 3).

- Tank farm Nos. 6 and 7 were abandoned in place in 1990. Tank farm No. 8 was removed at the same time.

2. If any of the above were removed, was the removal supervised or permitted by a governmental agency? Specify which agency and when the removal occurred. Attach copies of permits and/or reports.

- Information regarding supervision or permitting for the removal of the water softening plant was not found.

- The City of Glendale permitted the installation of a new cooling tower in March 1980.

- Abandonment of tank farm Nos. 6 and 7 and removal of tank farm No. 8 were performed by ENSR in 1990. The tank closures were performed under Permit Nos. 3755 and 3756, issued by the Glendale Fire Division, Fire Prevention Bureau. A copy of the permits is provided in Appendix A.

3. If available, provide the number of tanks (aboveground and underground) maintained and the volume.

   See Table 1 - Grayson Power Plant, Tank Summary as of March 1993.

B. Past and present storm water drainage system, sanitary sewer systems, including the use of any private sewage disposal system.

According to the individuals interviewed during the site reconnaissance and listed above, there has been no private sewage disposal systems used by the Grayson Power Plant. Storm water drainage either empties directly into the adjacent Verdugo Wash or into the Los Angeles River. The sanitary sewer system enters the site from the northeastern corner of the site, at the intersection of Bekins Way and Air Way. Sanitary sewer service is provided by the City of Glendale.

C. Any and all additions, demolitions, or changes of any kind to physical structures on, under, or about the site, or at the property itself (e.g., excavation work) and state the dates on which such changes occurred.

- The Grayson Power Plant has 8 power generating units. Each of the generating units currently run on natural gas, which is transported via a Southern California Gas Company product line which enters the site from San Fernando Road. The initial construction of generator and boiler unit No. 1 occurred in 1941. Generator and boiler unit Nos. 2 through 5, were constructed in 1948, 1953, 1959 and 1965, respectively. Gas turbine unit Nos. 6 and 7 were constructed in 1972 and 1974. Unit No. 8 was constructed in 1978. Switch racks were constructed as new generating units were installed, and are located to the east of the generators.

- Five large cooling towers and one small cooling tower have been constructed on the site between 1941 and 1980. Cooling tower Nos. 1 and 2 were replaced by more efficient models in approximately 1976 and 1978, respectively.

| | |
|---|---|
| April 27, 1976 | Construction of a 200-square-foot chemical storage building. |
| October 8, 1976 | Construction of a new 884-square-foot (17' x 52') control house for the electrical substation. |
| January 25, 1980 | Demolition of a cooling tower. |
| March 7, 1980 | Installation of a new cooling tower. |
| July 28, 1989 | Installation of block walls and wood frame roof (for generator) |

D. Have there been any changes in general plant design or construction? Describe, and provide dates.

None, with the exception of the above-mentioned items.

## II. SITE USE AND OPERATIONS

A. Identify all prior owners of the site and the dates of their ownership.

From historical records review and interviews with onsite personnel, it appears that the subject site has been owned by the City of Glendale since at least 1934, the date of the earliest available aerial photograph showing the Grayson Power Plant in the initial stages of construction. The site was vacant before construction of the power plant. Owners prior to 1934 are not known.

B. Identify the prior operators and lessees of the site, for each such operator or lessee, further identify:

a. The dates of their operation at the site.

The City of Glendale has operated the site since 1941, when the facility began operation. Prior operators are not known.

b. The nature of their operations at the site.

Steam electric power generation. Operations prior to 1941 are not known, but the subject site appeared to be unused.



SIGNED: KKomu

c. All evidence that hazardous materials were released or threatened to be released at the site during the period in which they were operating at the site.

A letter from the California RWQCB to Mr. Kerry French at the City of Glendale Public Service Department, dated June 3, 1992, identified several releases of oil and/or hazardous materials at the site during the period, which the City of Glendale has operated the power plant. A Subsurface Investigation Work Plan, dated August 19, 1991, by Seacor, and subsurface investigation reports dated March 1990 and January 18, 1991, by ENSR were reviewed by the RWQCB and the letter outlined the potential areas of environmental concern. They are:

- Subsurface soils beneath fuel oil bunker No. 9 and fuel lines L1, L2, L3, L4, and L5, are contaminated with petroleum-based hydrocarbons. The extent of contamination beneath this fuel oil bunker and the fuel lines have not been delineated.

- Subsurface soils in the areas of underground tank farm Nos. 6, 7, and 8 are also contaminated with petroleum-based hydrocarbons. Tank farm Nos. 6 and 7 were abandoned in-place. Tank farm No. 8 was removed. The extent of contamination at each of these tank farms has not been delineated.

- Ground water samples collected from various monitoring wells and production wells on the site have consistently contained petroleum-based hydrocarbons at concentrations ranging from 0.6 to 1.0 mg/l in all wells for testing completed during November 1989. The wells sampled, include monitoring wells MW-1 through MW-3, located on the perimeter of tank farm Nos. 6 and 7, monitoring wells MW-4 through MW-6, located on the perimeter of UST No. 9, and production well Nos. 1 and 2, located next to fuel oil storage tank No. 5 and between cooling tower Nos. 3 and 4, respectively. The extent of these contaminated sites has not been delineated.

Additional rounds of sampling and analysis from wells completed during January 1991, identified 1,2-dichloroethane (DCA) at 0.5 $\mu$g/l in well No. 1, at 5.8 $\mu$g/l in MW-1, and at 6.1 $\mu$g/l in MW-3. The measurements of DCA in these wells exceed the State of California Safe Drinking Water Standard. According to the personnel interviewed for this report, the Grayson Power Plant has not used DCA or halogenated solvents at the plant.



SIGNED: KKamm

The RWQCB concluded that contaminants have been identified in subsurface soils to a depth of approximately 35 feet below land surface (bls). Ground water is present at approximately 37 feet bls. Petroleum-based hydrocarbons and chlorinated volatile organic compounds (1,1-DCE) have also been identified in ground water underlying the site. Although confirmation of soils and ground water discharges have been identified at several point sources, the full extent of soil and ground water contamination has not been delineated. In addition, all potential discharge point sources have not been evaluated. According to the RWQCB, the source areas not adequately evaluated include: Day tank Nos. 1, 2, and 3; fuel oil bunker Nos. 1, 2, 3, and 4; tank farm No. 8; and aboveground tank No. 5.

In addition, approximately 8 to 10 years ago, an insulator blew-out in one of the transformers located in the southwestern portion of the switch transfer yard. According to Mr. Richard Wilson, an employee of the subject site, the incident caused the breaker to explode, resulting in a release of mineral oil to the immediate area of the transformer location. Also according to Mr. Wilson, the mineral oil did not contain PCBs.

C. Describe the major processes involved in operation:

Natural gas flows into the subject site from San Fernando Road via a 4-inch gas main. The natural gas fires the boilers. Steam generated from the boilers turn turbines which are directly coupled to the power generators. Steam that passes through the steam turbines becomes saturated or finally transformed into liquid water. This water is cooled in the condenser, which contains circulating water from the cooling towers on the site. The cooled water is then returned to the boilers, and the process begins again. Gas turbines are also onsite, propelled with combustion gases to generate power. The generated power goes to the switch and transfer yard, where it is stepped down for distribution.

Two different types of water are used in the plant processes. Reclaimed water is circulated through the cooling towers to cool the hot process water. Before the reclaimed water is used, it goes through a sand filtering process which takes place in the old phosphate removal system tank located next to UST No. 9.

Process water is drinking water that has been highly treated with one or more of the chemicals listed below. A reverse osmosis system is currently used to purify and partially treat the drinking water. This water is used in the boilers to be converted to steam for direct injection into the turbines/generators.

1. List all processes in which solvents are used.

   Small amounts (less than 50 gallons at any one time) of solvents are used in the mechanical shop for degreasing purposes and as paint thinner. These solvents include stoddard solvent and lacquer thinner.

D. Provide a historical summary of chemicals used (including the technical name, ingredients, quantity stored) on site and usage rate for the past 10 years.

- **Morpholine** is used as a pH adjuster in the water of the reverse osmosis system. Morpholine contains diethylene oximide. Current storage on the site is in diluted form in aboveground storage tank Nos. 1a, 1b, 2, and 3. These tanks contain approximately 121,000 gallons total of a mixture of morpholine and water. The usage rate for the past 10 years is approximately 150 gallons per year.

- **Sulfuric acid** is used as a pH adjuster in the cooling towers. Current quantity stored on the site is 4,500 gallons in two aboveground acid storage tanks. The usage rate for the past 10 years is approximately 105,000 gallons per year.

- **Fuel oil** is used as a back-up to fuel the steam electric generation process. Both fuel oil Nos. 2 and 6 were last purchased several years ago. Approximately 30,000 to 40,000 forty-two-gallon barrels of No. 6 fuel oil and approximately 30,000 barrels of No. 2 fuel oil were purchased at that time. Current quantity stored on the site is 1,383,600 gallons, which is stored in underground fuel oil bunker Nos. 1, 2, 3 and 4, and aboveground day tank Nos. 1, 2, and 3. Annual usage is currently minimal.

- **Chlorine gas** is used as a biocide/algicide in the clarifier and filter. Current quantity stored on the site is a 1-ton cylinder and approximately eleven 250-psi cylinders. The usage rate for the past 10 years is approximately twenty-four 1-ton cylinders per year.

- **Nitrogen gas** is used as a combustion emissions monitor per South Coast Air Quality Management District (SCAQMD) requirements. Current quantity stored on the site is three 250-psi cylinders. The usage rate for the past 10 years is approximately four 200-cubic-foot cylinders per year.

- **Hydrogen gas** is used to cool the generators. Current quantity stored on the site is approximately five 250-psi cylinders. The usage rate for the past 10 years is approximately fifty-seven 197-cubic-foot cylinders per year.



AUD JAN

SIGNED: KKgmw

- **Acetylene and oxygen gas** is used in small-scale welding processes. Current quantity stored on the site is one 250-psi cylinder of each. The usage rate for the past 10 years is approximately five cylinders per year.

- **Sodium hydroxide** is used in the regeneration process of the demineralizer and for pH adjustment to the cooling towers. Current quantity stored on the site is 600 gallons in the No. 2 caustic tank. The usage rate for the past 10 years is approximately 2,600 to 3,000 gallons per year.

- **Sodium sulfite** is used as a conditioner in the condensate system. Current quantity stored on the site is 200 pounds. The usage rate for the past 10 years is approximately 800 pounds per year.

- **Aluminum sulfate** is used to flocculate phosphate from the reclaimed water used in the cooling towers. Although current quantity stored on the site is 4,000 gallons, aluminum sulfate has not been used since 1989. The usage rate for the past 5 years is zero. Prior to 5 years ago, the usage rate was approximately 4,000 to 6,000 gallons per year.

- **NALCO 8303** is used as a chemical dispersant and a corrosion inhibitor, it keeps the solids in suspension, the calcium from plating out, and the boiler tubes free of corrosion. It contains sodium hydroxide. Current quantity stored on the site is 1,000 gallons. The usage rate for the past 10 years is approximately 2,000 gallons per year.

- **American Cyanimid MAGNIFLOC 1820A** is used as a flocculent. It contains petroleum distillate. Although two 55-gallon drums are currently stored at the plant, 1820A has not been used since 1990. The usage rate for the past 4 years is zero. Prior to 4 years ago, the usage rate was approximately four 55-gallon drums per year.

- **Lacquer thinner and/or stoddard solvent** are used as degreasers. The lacquer thinner used is acetone. Current storage on the site is one 55-gallon drum. The usage rate for the past 10 years is approximately three to six 55-gallon drums per year, respectively.

- **Lube oils and greases** are used to lubricate various machinery. Current storage on the site is approximately 50 to 100 gallons of various lube oils and greases stored in appropriately rated metal storage cabinets in the workshop area. The usage rate for the past 10 years is approximately 20 barrels per year.



JAN

SIGNED: KKamm

- **Dielectric fluid** is used as the insulating and cooling fluid in the onsite transformers. It contains solvent-refined, hydrotreated middle distillate, severely hydrotreated light napthenic distillate, and butylated hydroxy toluene. According to the MSDS sheet, this product contains no detectable (less than 1 ppm) of PCB as measured by ASTM D4059. The usage rate for the past 10 years varies according to the number of transformers converted from PCB-containing to non-PCB containing. Approximate usage is 5,000 gallons over the last 10 years.

- **Turbine oil (Mobil DTE 797)** is used to lubricate the power generation turbines. Current storage on the site is approximately 22,000 gallons. The usage rate for the past 10 years is approximately 800 gallons per year.

- A wet lab is located on a portion of the third floor of the power block. Chemical storage and use in the wet lab is apparently limited to small amounts, generally less than one pint, of water testing chemicals including ferrozine, chromic acid, calcium buffer containing alkali, dilute sodium chloride, terpene solution containing hexylene glycol and limonene, dilute potassium bromate, titrating solution and bacteria dye. Additional chemicals in the lab included the following chemicals in quantities of less than 5 gallons: acetone, alcohol, denatured alcohol, methanol, glycerol, methyl ethyl ketone, and mercuric nitrate. The flammable chemicals were stored within an appropriately rated and signed metal storage cabinet. The chemical usage rate of the laboratory chemicals varies. Quantities of chemicals are generally stored for less than 6-month intervals.

E. From whom are chemicals purchased? In what quantities are they received?

- Morpholine is purchased from NALCO and is received in either 30- or 55-gallon drums.

- Sulfuric acid is purchased from Allied Chemical (renamed Western States Chemical) and is received in 1-ton cylinders.

- Fuel oil tank No. 2 is purchased from Texaco and is received in several thousand barrel loads. Fuel oil tank No. 6 is purchased from Kern Oil and is likewise received in several thousand barrel loads.

- Chlorine, nitrogen, and hydrogen gases are purchased from either Gastech, Big 3, Liquid-Air, or Scott Specialty. Welding gases including acetylene and oxygen are purchased from Airco. They are received in cylinders.

- Sodium hydroxide is purchased from Southern California Western Chemical and is received in 50-pound bags.
- Sodium sulfite is purchased from Southern California Western Chemical and is received in 50-pound bags.
- Aluminum sulfate was purchased from Allied Chemical, but is no longer used at the site.
- NALCO 8303 is purchased from Nalco Chemical Company and is received in 55-gallon drums.
- American Cyanimid MAGNIFLOC 1820A was purchased from American Cyanamid Company, but is no longer used at the facility.
- Lacquer thinners and solvents are purchased from various sources, mainly from Karlie Company, Ellis Paint, and Shell Oil. They are received in quantities from small containers to 55-gallon drums.
- Lube oils and greases are also purchased from various sources, mainly from Mobil Oil. They are received in quantities from small containers to 55-gallon drums.
- Dielectric fluid is purchased from Shell Oil. It is received in 55-gallon drums.
- Laboratory chemicals are purchased from various sources. At the time of this assessment, the laboratory chemicals were purchased from Hach Co., Calgon, Dow Chemical, Nalco, Certified Labs and Baker. These chemicals are received in quantities of 4 liters or less.

## III. WASTES AND WASTE MANAGEMENT

A. What are the sources of industrial waste from site? (Identify sources by process, composition of wastes generated, and approximate quantities)

Boiler and cooling tower blowdown, reverse osmosis system concentrate and waste resin from the demineralizer tanks. Approximate quantities vary according to plant production. In a typical year, the power plant generates approximately 9.23 million gallons of boiler and cooling tower blowdown and 800,000 gallons of reverse osmosis and demineralizer system waste water discharge.

B. Where and how is waste being stored?

Hazardous waste is stored in the hazardous waste storage area, an asphalt paved area south of abandoned tank farm Nos. 6 and 7. Secondary containment was not observed to be present surrounding the storage area. Surficial staining on the asphalt paving was not observed. Per Mr. Tom Jordan's knowledge, there have been no hazardous materials spills or incidents in the hazardous waste storage area.

C. How long is waste stored?

Less than 90 days from generation.

D. What wastes are stored?

Solvents (including stoddard solvent and acetone), empty aerosol spray paint cans, oil and water mixture, oil and water sludge, waste absorbent, friable and non-friable asbestos-containing materials (ACM), PCB-containing waste, oily rags and sodium sulfite.

E. Are wastes being manifested properly? Yes

F. Waste disposition (yes or no, as appropriate)

*Note: The following answers apply to all wastes generated on the site. It is not limited to chemicals and potentially hazardous waste.*

| | | |
|---|---|---|
| 1. | Dumpster? | Yes |
| 2. | Ground around facility? | No |
| 3. | Left at remote site? | No |
| 4. | Municipal trash? | Yes |
| 5. | On site recycling, treatment, reclamation? | No |
| 6. | Offsite recycling, treatment, reclamation? | Yes |
| 7. | Septic tank? | No |
| 8. | Sewer? | Yes |
| 9. | Transported to Landfill/Dump? | Yes |

10. Transported to hazardous waste facility by waste Hauler (Identify facility and Hauler)
    - ACM is transported to both BKK landfill in West Covina, California, and U.S. Ecology, Inc., in Nevada. It is hauled by both BDC Services, Inc., and H.V. Transport Systems, respectively.

- PCB-containing waste, solvent waste, sodium sulfite and empty spray paint cans are transported to U.S. Ecology, Inc., in Nevada. They are hauled by H.V. Transport Systems.

- Oil and water mixture, and oil and water sludge are transported to both U.S. Ecology, Inc., in Nevada, and DeMenno Kerdoon in Compton, California. They are hauled by both H.V. Transport Systems and Asbury Environmental, respectively.

- Oily rags and waste absorbent are transported to Statewide Environmental Services in Los Angeles. They are hauled by Express Oil.

- Waste resin from the demineralizing tanks is transported to Summit Environmental Corporation. It is hauled by H.V. Transport Systems.

11. Other (specify) -

The above-mentioned materials are stored in the hazardous waste storage area.

12. Identify any changes in the above over time, giving date and nature of change.

According to sources interviewed on the site as part of this report, there have not been changes to the above-mentioned waste management practices.

## DATABASE INFORMATION

Fugro-McClelland obtained environmental agency databases from Environmental Data Resources (EDR). The databases were reviewed to identify registrations and documented environmental incidents regarding the subject site and adjacent properties. The following section summarizes our findings.

**State of California Environmental Protection Agency - Resource Conservation and Recovery Information System.** The Resource Conservation and Recovery System (RCRIS) includes selective information on sites which generate, transport, store, treat, or dispose hazardous waste as defined by the Resource Conservation and Recovery Act (RCRA). The subject site is not listed on the RCRA listing. However, four sites located within a

one-quarter-mile radius of the subject site are referenced as generating small quantities of hazardous waste and four sites located within a one-quarter-mile radius of the subject site are referenced as generating large quantities of hazardous waste. They include:

| Location | Distance From Subject Site | Large Quantity / Small Quantity Generator |
|---|---|---|
| City of Glendale Public Services<br>800 Air Way | Adjacent north | Large Quantity Generator |
| M & R Machine<br>811 Air Way | 0.1 mile NW | Small Quantity Generator |
| City of Glendale Env Mgmt Center<br>780 Flower Street | 0.2 mile NW | Large Quantity Generator |
| A Biederman Inc.<br>1045 Air Way | 0.3 mile NW | Small Quantity Generator |
| Agfa Corporation<br>1014 Grand Central Avenue | 0.3 mile NW | Large Quantity Generator |
| Calif Sion Co. Inc.<br>1021 Air Way | 0.3 mile NW | Small Quantity |
| Highland Cleaners<br>836 W. Glenoaks Boulevard | 0.4 mile N | Large Quantity Generator |
| Highland Mobil<br>900 W. Glenoaks Boulevard | 0.5 mile N | Small Quantity Generator |

The subject site is not listed in the RCRIS TSDF listing as being a facility which treated, stored, or disposed of hazardous waste. However, Mac Dermid, Incorporated, located approximately one-half-mile south-southeast of the subject site at 5439 San Fernando Road was listed in the RCRIS TSDF database.

**Facility Index System.** The Facility Index System (FINDS) provides EPA with an inventory of almost 500,000 facilities. FINDS contains both facility information and "pointers" to other sources of information that contain more detailed information about the facility. The subject site is not listed in the FINDS listing. However, eight sites were referenced within a one-quarter-mile radius of the subject site. Each of the eight facilities are listed on the RCRIS database and previously discussed (see above).

**California Water Resources Control Board - UST Listing.** USTs are regulated under Subtitle I of RCRA and must be registered with the state department responsible for administering the UST program. The subject site is referenced on the UST listing. In addition, 11 sites located within one-quarter-mile of the subject site were listed. They include:

| Location | Distance From Project Area | Number of Tanks |
|---|---|---|
| Grayson Power Plant[a]<br>800 Air Way | Subject site | 16 |
| Public Service Corporate Yard<br>800 Air Way | Adjacent N | 4 |
| 99174<br>5700 San Fernando Road | Adjacent ENE | 4 |
| Bargain Gas<br>5800 San Fernando Road | Adjacent ENE | 5 |
| Moulder Bros.<br>955 W. Doran Street | 0.2 mile S | 1 |
| Sperry Electric, Inc.[a]<br>915 Air Way | 0.2 mile NW | 1 |
| Doran Street Wastewater Pumping<br>976 W. Doran Street | 0.2 mile S | 1 |
| A Biederman Inc.<br>1045 Air Way | 0.3 mile NW | 2 |
| Economy Packaging<br>907 Flower Street | 0.3 mile W | 2 |
| Tony's Express<br>907 Flower Street | 0.3 mile W | 2 |
| Hundley Company<br>933 Air Way | 0.3 mile NW | 1 |
| Krikor Keledjian No. 14-227[a]<br>900 W. Glenoaks Boulevard | 0.4 mile N | 5 |
| Mr. Fence Inc.<br>6006 San Fernando Road | 0.4 mile NW | 1 |

[a]Also listed on the LUST Listing (see below).

**State of California Regional Water Quality Control Board - LUST Listing.** The RWQCB, Los Angeles Region is the agency with jurisdiction over water quality, water contamination problems, and leaking USTs in the region of the subject site. Fugro-McClelland researched the RWQCB LUST listings which lists USTs in the region of the subject site which have been reported as leaking. The subject site is listed in the publication and Fugro-McClelland is currently performing pollution characterization on the site. In addition, two sites are listed within a one-half-mile radius of the subject site. The listing includes:

| Location | Distance From Subject Site | Date of Report | Current Status |
|---|---|---|---|
| Grayson Power Plant<br>5750 San Fernando Road | Subject site | 02/17/88 | Pollution characterization; ground water has been affected |
| Monterey Tow<br>915 Air Way | 0.2 mile NW | 07/16/91 | Preliminary site assessment work plan submitted; ground water has been affected |
| Mobil Station No. 11-GGL<br>900 W. Glenoaks Boulevard | 0.4 mile N | 09/01/87 | Pollution characterization; affected medium unknown |

Although the Mobil Station listed above is located hydrologically upgradient from the ubject site, it is greater than one-quarter-mile away. Given the distances involved, it is not xpected than contamination from this site would extend to the subject site; therefore, this site oes not appear to be a significant environmental concern to the subject site.

Monterey Tow is located approximately 0.2 mile northwest, and hydrologically pgradient of, the subject site. Ground water beneath this site is listed as having been affected. lthough this site is located potentially upgradient of the subject site, it is located at such a istance that it is not expected to pose a significant environmental concern to the subject site.

**Hazardous Waste and Substances Site List - CORTESE Listing.** The Hazardous Vaste and Substances Site List is a compilation by the State of California Office of Planning and Research of potential and confirmed hazardous waste and substance sites throughout California. This list includes tank leaks compiled by the Water Resource Control Board, abandoned azardous waste sites compiled by the Toxic Substance Control Division of the California Department of Health Services, contaminated public water drinking wells compiled by the Environmental Health Division of the California Department of Health Services, California Bond Expenditure Sites (also known as the State Superfund list) and solid waste disposal sites with nown migration of hazardous waste. The subject site is referenced on the CORTESE listing. n addition, three sites located within a one-half-mile radius of the subject site are referenced n this listing. They include:

| Location | Distance From Subject Site | Problem |
|---|---|---|
| Grayson Power Plant<br>5750 San Fernando Road | Subject Site | Tank leak |
| City of Glendale<br>800 Air Way | Adjacent N | Tank leak |
| City of Glendale Public Services<br>800 Air Way | Adjacent N | Tank leak |
| Mobil Station No. 11-GGL<br>900 Glenoaks Boulevard | 0.4 mile N | Tank leak |

The Mobil station listed above has been previously discussed on the LUST Listing.

The City of Glendale listings are located potentially upgradient of the subject site and ave the potential to impact the subject site.

**Solid Waste Facilities/Landfill Sites.** Solid Waste Facilities/Landfill Sites (SWF/LS) ecords typically contain an inventory of solid waste disposal facilities or landfills in a particular tate. These may be active or inactive facilities or open dumps. Neither the subject site nor ites within a 1-mile radius of the subject site were listed in the SWF/LS listing.

Although the Mobil Station listed above is located hydrologically upgradient from the subject site, it is greater than one-quarter-mile away. Given the distances involved, it is not expected than contamination from this site would extend to the subject site; therefore, this site does not appear to be a significant environmental concern to the subject site.

Monterey Tow is located approximately 0.2 mile northwest, and hydrologically upgradient of, the subject site. Ground water beneath this site is listed as having been affected. Although this site is located potentially upgradient of the subject site, it is located at such a distance that it is not expected to pose a significant environmental concern to the subject site.

**Hazardous Waste and Substances Site List - CORTESE Listing.** The Hazardous Waste and Substances Site List is a compilation by the State of California Office of Planning and Research of potential and confirmed hazardous waste and substance sites throughout California. This list includes tank leaks compiled by the Water Resource Control Board, abandoned hazardous waste sites compiled by the Toxic Substance Control Division of the California Department of Health Services, contaminated public water drinking wells compiled by the Environmental Health Division of the California Department of Health Services, California Bond Expenditure Sites (also known as the State Superfund list) and solid waste disposal sites with known migration of hazardous waste. The subject site is referenced on the CORTESE listing. In addition, three sites located within a one-half-mile radius of the subject site are referenced on this listing. They include:

| Location | Distance From Subject Site | Problem |
|---|---|---|
| Grayson Power Plant<br>5750 San Fernando Road | Subject Site | Tank leak |
| City of Glendale<br>800 Air Way | Adjacent N | Tank leak |
| City of Glendale Public Services<br>800 Air Way | Adjacent N | Tank leak |
| Mobil Station No. 11-GGL<br>900 Glenoaks Boulevard | 0.4 mile N | Tank leak |

The Mobil station listed above has been previously discussed on the LUST Listing.

The City of Glendale listings are located potentially upgradient of the subject site and have the potential to impact the subject site.

**Solid Waste Facilities/Landfill Sites.** Solid Waste Facilities/Landfill Sites (SWF/LS) records typically contain an inventory of solid waste disposal facilities or landfills in a particular state. These may be active or inactive facilities or open dumps. Neither the subject site nor sites within a 1-mile radius of the subject site were listed in the SWF/LS listing.

**State of California Cal-Sites List.** The State of California Cal-Sites List combines the former State of California ASPIS (Abandoned Sites Program Information System) and the BEP (California Bond Expenditure Plan), also known as the Annual Work Plan (AWP), databases. The Cal-Sites List is a compilation of sites which have been brought to the attention of the State of California Environmental Protection Agency (EPA), through various means, as being possible sites of hazardous waste activity or contamination. It should be noted that the Cal-Sites List is an informational database and not necessarily an action list. The subject site is listed in the State of California Cal-Sites Listings. However, the subject site is listed as requiring no further action. There were no AWP listings within a 1-mile radius of the subject site on the Cal-Sites Listings. However, 34 sites located within a one-half-mile radius of the subject site were listed. Of those 34 sites listed on the Cal-Sites database, 19 are listed as requiring no further action. Therefore, these sites do not appear to be a significant environmental concern to the subject site. The remaining sites include:

| Location | Distance From Subject Site | Status |
|---|---|---|
| Sellars Products, Inc.<br>4520 Doran Street | 0.2 mile S | Preliminary Endangerment Assessment Required, Low Priority |
| Space Electronics Corp.<br>930 Air Way | 0.2 mile NW | Site Screening Required |
| AAA Paper Stock<br>5487 West San Fernando Road | 0.3 mile SE | Site Screening Required |
| Isovac Engineering, Inc.<br>932 Grand Central Avenue | 0.3 mile NW | Preliminary Endangerment Assessment Required, Medium Priority |
| Fabric Flameproofing Company<br>835 Milford Street | 0.3 mile SE | Preliminary Endangerment Assessment Required, Low Priority |
| Metacomet, Inc.<br>1014 Grand Central Avenue | 0.3 mile NW | Preliminary Endangerment Assessment Required, Medium Priority |
| Conwin Carbonic<br>5420 San Fernando Road | 0.4 mile SE | Preliminary Endangerment Assessment Required, Low Priority |
| Printers Research Pacific<br>5447 West San Fernando Road | 0.4 mile SE | Preliminary Endangerment Assessment Required, Medium Priority |
| RA Fischer & Company<br>517 Commercial Street | 0.4 mile SE | Site Screening Required |
| Sunland Chemical & Research Corp.<br>5440 West San Fernando Road | 0.4 mile SE | Preliminary Endangerment Assessment Required, Low Priority |
| Semco; A division of PRC<br>5454 West San Fernando Road | 0.4 mile SE | Preliminary Endangerment Assessment Required, Low Priority |
| Products Research & Chemical Corp.<br>5430 San Fernando Road | 0.5 mile SE | Preliminary Endangerment Assessment Required, Medium Priority |
| American Hospital Supply Corp.<br>1015 Grandview Avenue | 0.6 mile NW | Preliminary Endangerment Assessment Required, Low Priority |
| Catalina Plastics & Coatings Corp.<br>1200 Flower Street | 0.6 mile NW | Preliminary Endangerment Assessment Required, Low Priority |
| Glenair Inc.<br>1211 Air Way | 0.6 mile NW | Preliminary Endangerment Assessment Required, Low Priority |

Thirteen of the above-listed sites are located at or greater than one-quarter-mile from the subject site and the CAL/EPA has determined that either a preliminary site assessment or a site screening is required at these sites. Due to the distances from the subject site, they do not appear to pose a significant environmental concern to the subject site.

Sellars Products, Inc., located approximately 0.2 mile south of the subject site at 4520 Doran Street, is listed as requiring a low priority preliminary site assessment. Because this site is located hydrologically downgradient, and across the Verdugo Wash, from the main portion of the subject site, this site does not appear to pose a significant environmental concern to the subject site.

Space Electronics Corp., located approximately 0.2 mile northwest of the subject site at 930 Air Way, is listed as requiring a site screening. Although this site is located potentially hydrologically upgradient of the subject site, it is located at such a distance that it is not expected to pose a significant environmental concern to the subject site.

**United States Environmental Protection Agency (U.S. EPA) CERCLIS Listings.** The U.S. EPA's Comprehensive Environmental Response, Compensation and Liability Information System (CERCLIS) Listings are a compilation of sites which have been brought to the attention of the U.S. EPA, through various means, as being possible sites of hazardous waste activity. The CERCLIS Listings are an informational database and not necessarily an action list. The subject site is not listed in the U.S. EPA CERCLIS Listings. However, nine sites are located within a 1-mile radius of the subject site. For each of those nine sites, the EPA has conducted a preliminary assessment on the site and has determined that no further action in necessary and no hazard was identified; therefore, these sites do not appear to pose a significant environmental concern to the subject site.

**National Priorities List - Federal Superfund List.** The National Priorities List is a federal EPA listing of private, state and federally owned sites which have been included on the federal Superfund List for remediation. Neither the subject site nor sites within a 1-mile radius of the subject site were listed in the National Priorities List.

**Toxic Release Inventory System.** The Toxic Release Inventory System (TRIS) includes facilities which use toxic chemicals in reportable quantities under the Superfund Amendments and Reauthorization Act of 1986 (SARA) and their releases of such chemical to the air, water or land. The subject site is not listed in the TRIS listing. However, two sites are located within a 1-mile radius of the subject site and include:

| Location | Distance From Subject Site | EPA Identification Number |
|---|---|---|
| Products Research & Chemical Corporation<br>5430 San Fernando Road | 0.5 mile SE | CAD008237596 |
| Drilube Company<br>711 West Broadway | 0.75 mile SE | CAD008337099 |

Both of the above-listed sites are at or greater than one-half-mile from the subject site; therefore, these sites do not appear to be a significant environmental concern to the subject site.

**Emergency Response Notification System, Hazardous Material Incident Report System, California Hazardous Material Incident Report System.** The Emergency Response Notification System (ERNS), Hazardous Material Incident Report System (HMIRS), and the California Hazardous Material Incident Report System (CHMIRS) contain records of hazardous

material spill incidences. Neither the subject site nor properties located within a one-quarter-mile radius of the subject site are referenced in these listings.

## CONCLUSIONS

Based on the public records review and site reconnaissance, the following areas of environmental concern were noted:

### Subject Site Activities

According to interviews of Grayson Power Plant personnel, an incident apparently occurred approximately 8 to 10 years ago in which an insulator blew out in one of the transformers located in the southwestern portion of the switch transfer yard. According to Mr. Richard Wilson, an employee at the subject site, the incident caused the breaker to explode, resulting in a release of mineral oil to the immediate area of the transformer location. Also according to Mr. Wilson, the mineral oil did not contain PCBs. Unless available records can document the use, at the time of the incident, of biodegradable mineral oil, the released mineral oil may have impacted the subject site. This portion of the subject site has not been assessed as to the extent of possible contamination.

The hazardous waste storage area located near abandoned tank farm Nos. 6 and 7 does not currently have a containment barrier to prevent either vertical or lateral migration of potential contamination should an incident occur. The area is asphalt paved which does not prevent vertical movement of potential contamination. Nor does it contain a concrete berm to prevent lateral migration of potential contamination. In addition, the area is not covered to protect stored waste from the elements.

Sulfuric acid storage tank No. 1 has a capacity of 3,300 gallons. The tank is located approximately 15 feet above the ground and is supported by concrete blocks. Although the tank has both secondary and tertiary curbing surrounding it, the containment measures do not appear to be adequate if a significant seismic event or a vehicle crash were to occur. If this were to happen, the tank itself or its contents could potentially fall outside of the bermed area and potentially impact the subject site.

Documented petroleum hydrocarbon releases on the subject site include areas surrounding UST No. 9, abandoned tank farm Nos. 6 and 7, and removed tank farm No. 8. Although both wells and borings have been installed and contamination documented, the extent of that contamination was not delineated prior to initiation of the subsurface assessment associated with

this report. Additional soil and ground water sampling completed for this assessment will contribute in assessing the extent of contamination.

Underground fuel bunker Nos. 1, 2, 3, and 4, have not been closely assessed for potential releases. However, a letter from the RWQCB to the City of Glendale, dated June 3, 1992, indicated that it is not cost effective to install the number of test borings needed to adequately assess the lateral and vertical extent of contaminants beneath these tanks. Therefore, the RWQCB requested that a sufficient number of ground water monitoring wells be installed to determine whether waste discharges from these units have impacted ground water resources beneath the facility. These wells were installed as part of our subsurface assessment completed in conjunction with this audit.

Subsurface soil sampling along fuel product lines has been completed, by Fugro and ENSR, at various locations throughout the facility. However, the low density sampling interval completed along the pipeline alignments did not thoroughly characterize the potential for subsurface contamination along the alignments. In addition, potential subsurface contamination has not been assessed in the vicinity of the waste water lines leading to the blowdown pump station, located adjacent to fuel oil storage tank No. 5, and the line leading from the blowdown pump station to the temporary holding facility, located adjacent to cooling tower No. 2.

### Adjacent Subject Site Activities

The City of Glendale Public Service Corporate Yard, located adjacent to the subject site to the north, is listed twice on the LUST listing. This site is located potentially upgradient of the subject site and has a significant potential to impact the subject site. The importance of identifying a potential offsite contributor to potential contamination is important given that petroleum hydrocarbon contamination has been documented on the subject site.

## LIMITATIONS

This report has been prepared for the City of Glendale as a Facility Audit of the Grayson Power Plant located at 634 Bekins Way in Glendale, California. This report has been prepared as a review of available records of hazardous materials use, storage, generation, and disposal of the subject site and adjacent properties. Our opinion is based on conditions known to exist at the time the site work was performed. Fugro-McClelland is not responsible for conditions which may have gone undetected or which arise at any subsequent time. Fugro-McClelland cannot guarantee the accuracy or completeness of government agency database searches and file reviews or of information provided in personnel interviews. This assessment is not intended to be a complete or specific definition of all conditions above or below grade. Fugro-McClelland

is not responsible for conditions or consequences arising from relevant facts that were concealed, withheld, or not fully disclosed at the time this study was performed.

In performing our professional services, we strive to apply present engineering and scientific judgement and used a level of effort consistent with the standard of practice measured on the date of this report and in the locale of the subject site for similar type studies. No warranty is expressed or implied concerning any of the observations or conclusions contained in this report.

-- o --

# Table 1. Grayson Power Plant, Tank Summary as of March 1993

| Common Name | Capacity, gal | Inventory, gal | Location | Contents Present | Contents Past | Construction | Notes |
|---|---|---|---|---|---|---|---|
| No. 1 Fuel Oil Bunker | 908,964 | 91,182 | Below ground | No. 6 Fuel Oil | Same | Concrete | |
| No. 2 Fuel Oil Bunker | 916,398 | 794,850 | Below ground | No. 6 Fuel Oil | Same | Concrete | |
| No. 3 Fuel Oil Bunker | 907,578 | 65,898 | Below ground | No. 6 Fuel Oil | Same | Concrete | |
| No. 4 Fuel Oil Bunker | 1,214,682 | 245,238 | Below ground | No. 6 Fuel Oil | Same | Concrete | |
| No. 9 Fuel Oil Bunker | 2,589,930 | 0 | Below ground | No. 2 Fuel Oil | Same | Concrete | |
| No. 5 Fuel Oil Tank | 4,060,000 | 885,948 | Above ground | No. 2 Fuel Oil | No. 6 Fuel Oil | Steel | |
| No. 6a Fuel Oil Tank | N/A | N/A | Below ground | No. 2 Fuel Oil | Same | Steel | Abandoned Jan 1990 |
| No. 6b Fuel Oil Tank | N/A | N/A | Below ground | No. 2 Fuel Oil | Same | Steel | Abandoned Jan 1990 |
| No. 6c Fuel Oil Tank | N/A | N/A | Below ground | No. 2 Fuel Oil | Same | Steel | Abandoned Jan 1990 |
| No. 7a Fuel Oil Tank | N/A | N/A | Below ground | No. 2 Fuel Oil | Same | Steel | Abandoned Jan 1990 |
| No. 7b Fuel Oil Tank | N/A | N/A | Below ground | No. 2 Fuel Oil | Same | Steel | Abandoned Jan 1990 |
| No. 7c Fuel Oil Tank | N/A | N/A | Below ground | No. 2 Fuel Oil | Same | Steel | Abandoned Jan 1990 |
| No. 8a Fuel Oil Tank | N/A | N/A | Below ground | No. 2 Fuel Oil | Same | Stainless Steel | Removed Jan 1990 |
| No. 8b Fuel Oil Tank | N/A | N/A | Below ground | No. 2 Fuel Oil | Same | Stainless Steel | Removed Jan 1990 |
| No. 8c Fuel Oil Tank | N/A | N/A | Below ground | No. 2 Fuel Oil | Same | Stainless Steel | Removed Jan 1990 |
| No. 8d Fuel Oil Tank | N/A | N/A | Below ground | No. 2 Fuel Oil | Same | Stainless Steel | Removed Jan 1990 |
| No. 8e Fuel Oil Tank | N/A | N/A | Below ground | No. 2 Fuel Oil | Same | Stainless Steel | Removed Jan 1990 |
| No. 1 Fuel Oil Day Tank | 19,866 | 15,540 | Above ground | No. 6 Fuel Oil | Same | Steel | |
| No. 2 Fuel Oil Day Tank | 88,116 | 73,080 | Above ground | No. 6 Fuel Oil | Same | Steel | |
| No. 3 Fuel Oil Day Tank | 126,882 | 97,818 | Above ground | No. 6 Fuel Oil | Same | Steel | |
| No. 6 Fuel Oil Day Tank | 798 | 798 | Above ground | No. 2 Fuel Oil | Same | Steel | |
| No. 7 Fuel Oil Day Tank | 798 | 798 | Above ground | No. 2 Fuel Oil | Same | Steel | |
| No. 8 Fuel Oil Day Tank | 6,006 | 4,200 | Above ground | No. 2 Fuel Oil | Same | Steel | |
| No. 1 Acid Tank | 3,300 | 3,100 | Above ground | $H_2SO_4$ | Same | Steel | |
| No. 2 Acid Tank | 3,500 | 1,442 | Above ground | $H_2SO_4$ | Same | Steel | |
| No. 2 Caustic Tank | 3,000 | 600 | Above ground | NaOH | Same | Steel | |
| Reverse Osmosis Tank | 88,000 | 88,000 | Above ground | Water | Same | Steel | |
| No. 1a Demin Water Tank | 20,000 | 20,000 | Above ground | Water/Morphaline | Same | Steel | |
| No. 1b Demin Water Tank | 20,000 | 20,000 | Above ground | Water/Morphaline | Same | Steel | |
| No. 2 Demin Water Tank | 31,000 | 31,000 | Above ground | Water/Morphaline | Same | Steel | |
| No. 3 Demin Water Tank | 56,000 | 56,000 | Above ground | Water/Morphaline | Same | Steel | |
| No. 8a Demin Water Tank | 19,500 | 19,500 | Above ground | Water | Same | Fiberglass | |
| No. 8b Demin Water Tank | 19,500 | 19,500 | Above ground | Water | Same | Fiberglass | |
| No. 8c Demin Water Tank | 19,500 | 19,500 | Above ground | Water | Same | Fiberglass | |
| No. 8d Demin Water Tank | 19,500 | 19,500 | Above ground | Water | Same | Fiberglass | |
| Alum Tank | 13,000 | 4,000 | Above ground | Alum | Same | Fiberglass | |

A. CHEMICAL NAME: Utility Cleaner B. COMMON/TRADE NAME: Gabe's Grit

C. METHOD OF STORAGE: UNDERGROUND TANK____ ABOVE GROUND TANK____
BARRELS____ OTHER (specify) plastic bottles

D. QUANTITY STORED: 24 oz.

E. WASTE DISPOSAL METHOD: SEWERED N/A HAULED____ ONSITE DISPOSAL____

F. IS THE WASTE TREATED PRIOR TO DISPOSAL: YES N/A NO____
If yes, method of treatment:

G. IS THE WASTE STORED PRIOR TO DISPOSAL: YES N/A NO____

A. CHEMICAL NAME: Utility Cleaner B. COMMON/TRADE NAME: Hands Up

C. METHOD OF STORAGE: UNDERGROUND TANK____ ABOVE GROUND TANK____
BARRELS____ OTHER (specify) plastic bottles

D. QUANTITY STORED: 1 gal.

E. WASTE DISPOSAL METHOD: SEWERED XX HAULED____ ONSITE DISPOSAL____

F. IS THE WASTE TREATED PRIOR TO DISPOSAL: YES XX NO____
If yes, method of treatment: gravity clarifier

G. IS THE WASTE STORED PRIOR TO DISPOSAL: YES____ NO XX

A. CHEMICAL NAME: Utility Cleaner B. COMMON/TRADE NAME: Orange Ruffy

C. METHOD OF STORAGE: UNDERGROUND TANK____ ABOVE GROUND TANK____
BARRELS____ OTHER (specify) plastic bottles

D. QUANTITY STORED: 1 gal.

E. WASTE DISPOSAL METHOD: SEWERED XX HAULED____ ONSITE DISPOSAL____

F. IS THE WASTE TREATED PRIOR TO DISPOSAL: YES XX NO____
If yes, method of treatment: gravity clarifier

G. IS THE WASTE STORED PRIOR TO DISPOSAL: YES____ NO XX

A. CHEMICAL NAME: Utility Degreaser B. COMMON/TRADE NAME: Green Kleen

C. METHOD OF STORAGE: UNDERGROUND TANK____ ABOVE GROUND TANK____
BARRELS____ OTHER (specify) plastic bottles

D. QUANTITY STORED: 1 gal.

E. WASTE DISPOSAL METHOD: SEWERED XX HAULED____ ONSITE DISPOSAL____

F. IS THE WASTE TREATED PRIOR TO DISPOSAL: YES XX NO____
If yes, method of treatment: gravity clarifiers

G. IS THE WASTE STORED PRIOR TO DISPOSAL: YES____ NO XX

A. CHEMICAL NAME: Utility Cleaner B. COMMON/TRADE NAME: Brute Force

C. METHOD OF STORAGE: UNDERGROUND TANK____ ABOVE GROUND TANK____
BARRELS____ OTHER (specify) metal cans

D. QUANTITY STORED: 240 oz.

E. WASTE DISPOSAL METHOD: SEWERED N/A HAULED____ ONSITE DISPOSAL____

F. IS THE WASTE TREATED PRIOR TO DISPOSAL: YES N/A NO____
If yes, method of treatment:

G. IS THE WASTE STORED PRIOR TO DISPOSAL: YES N/A NO____

A. CHEMICAL NAME: Utility Cleaner B. COMMON/TRADE NAME: Brute Force Aerosol

C. METHOD OF STORAGE: UNDERGROUND TANK____ ABOVE GROUND TANK____
BARRELS____ OTHER (specify) metal pressurized cans

D. QUANTITY STORED: 24 oz.

E. WASTE DISPOSAL METHOD: SEWERED____ HAULED XX ONSITE DISPOSAL____

F. IS THE WASTE TREATED PRIOR TO DISPOSAL: YES____ NO XX
If yes, method of treatment:

G. IS THE WASTE STORED PRIOR TO DISPOSAL: YES____ NO XX

A. CHEMICAL NAME: Epoxy Adhesive B. COMMON/TRADE NAME: HP Epoxy

C. METHOD OF STORAGE: UNDERGROUND TANK____ ABOVE GROUND TANK____
BARRELS____ OTHER (specify) Metal Cans

D. QUANTITY STORED: 3 gal.

E. WASTE DISPOSAL METHOD: SEWERED N/A HAULED____ ONSITE DISPOSAL____

F. IS THE WASTE TREATED PRIOR TO DISPOSAL: YES N/A NO____
If yes, method of treatment:

G. IS THE WASTE STORED PRIOR TO DISPOSAL: YES N/A NO____

A. CHEMICAL NAME: Silica Gel B. COMMON/TRADE NAME: 28-200 Dessicant

C. METHOD OF STORAGE: UNDERGROUND TANK____ ABOVE GROUND TANK____
BARRELS____ OTHER (specify) Metal Cans

D. QUANTITY STORED: 6 gal.

E. WASTE DISPOSAL METHOD: SEWERED N/A HAULED____ ONSITE DISPOSAL____

F. IS THE WASTE TREATED PRIOR TO DISPOSAL: YES N/A NO____
If yes, method of treatment:

G. IS THE WASTE STORED PRIOR TO DISPOSAL: YES N/A NO____

A. CHEMICAL NAME: Aluminum Powder B. COMMON/TRADE NAME: Cadweld #601 Weld. Powd

C. METHOD OF STORAGE: UNDERGROUND TANK____ ABOVE GROUND TANK____
BARRELS____ OTHER (specify) Bag

D. QUANTITY STORED: 30 lbs.

E. WASTE DISPOSAL METHOD: SEWERED N/A HAULED____ ONSITE DISPOSAL____

F. IS THE WASTE TREATED PRIOR TO DISPOSAL: YES N/A NO____
If yes, method of treatment:

G. IS THE WASTE STORED PRIOR TO DISPOSAL: YES N/A NO____



109.0756

A. CHEMICAL NAME: Aluminum Alloy B. COMMON/TRADE NAME: Cadweld #201 Weld. All.

C. METHOD OF STORAGE: UNDERGROUND TANK____ ABOVE GROUND TANK____
BARRELS____ OTHER (specify) plastic Bags

D. QUANTITY STORED: 30 lbs.

E. WASTE DISPOSAL METHOD: SEWERED N/A HAULED____ ONSITE DISPOSAL____

F. IS THE WASTE TREATED PRIOR TO DISPOSAL: YES N/A NO____
If yes, method of treatment:

G. IS THE WASTE STORED PRIOR TO DISPOSAL: YES N/A NO____

A. CHEMICAL NAME: Flux B. COMMON/TRADE NAME: Cadweld T-327 Flux

C. METHOD OF STORAGE: UNDERGROUND TANK____ ABOVE GROUND TANK____
BARRELS____ OTHER (specify) plastic bottles

D. QUANTITY STORED: 10 oz.

E. WASTE DISPOSAL METHOD: SEWERED N/A HAULED____ ONSITE DISPOSAL____

F. IS THE WASTE TREATED PRIOR TO DISPOSAL: YES N/A NO____
If yes, method of treatment:

G. IS THE WASTE STORED PRIOR TO DISPOSAL: YES N/A NO____

A. CHEMICAL NAME: Spray Flux B. COMMON/TRADE NAME: Cadweld Jet Pak

C. METHOD OF STORAGE: UNDERGROUND TANK____ ABOVE GROUND TANK____
BARRELS____ OTHER (specify) Metal pressurized cans

D. QUANTITY STORED: 750 oz.

E. WASTE DISPOSAL METHOD: SEWERED N/A HAULED____ ONSITE DISPOSAL____

F. IS THE WASTE TREATED PRIOR TO DISPOSAL: YES N/A NO____
If yes, method of treatment:

G. IS THE WASTE STORED PRIOR TO DISPOSAL: YES N/A NO____



109.0756

A. CHEMICAL NAME: Welding Solvent B. COMMON/TRADE NAME: Thermoweld

C. METHOD OF STORAGE: UNDERGROUND TANK____ ABOVE GROUND TANK____
BARRELS____ OTHER (specify) Metal Cans

D. QUANTITY STORED: 30 qts.

E. WASTE DISPOSAL METHOD: SEWERED N/A HAULED____ ONSITE DISPOSAL____

F. IS THE WASTE TREATED PRIOR TO DISPOSAL: YES N/A NO____
If yes, method of treatment:

G. IS THE WASTE STORED PRIOR TO DISPOSAL: YES N/A NO____

A. CHEMICAL NAME: Soldering Paste B. COMMON/TRADE NAME: Nukorode

C. METHOD OF STORAGE: UNDERGROUND TANK____ ABOVE GROUND TANK____
BARRELS____ OTHER (specify) Plastic Bottle

D. QUANTITY STORED: 20 lgs.

E. WASTE DISPOSAL METHOD: SEWERED N/A HAULED____ ONSITE DISPOSAL____

F. IS THE WASTE TREATED PRIOR TO DISPOSAL: YES N/A NO____
If yes, method of treatment:

G. IS THE WASTE STORED PRIOR TO DISPOSAL: YES N/A NO____

A. CHEMICAL NAME: Soldering Flux B. COMMON/TRADE NAME: FluxStik

C. METHOD OF STORAGE: UNDERGROUND TANK____ ABOVE GROUND TANK____
BARRELS____ OTHER (specify) plastic tube

D. QUANTITY STORED: 144 oz.

E. WASTE DISPOSAL METHOD: SEWERED N/A HAULED____ ONSITE DISPOSAL____

F. IS THE WASTE TREATED PRIOR TO DISPOSAL: YES N/A NO____
If yes, method of treatment:

G. IS THE WASTE STORED PRIOR TO DISPOSAL: YES N/A NO____



109.0756

A. CHEMICAL NAME: Solder B. COMMON/TRADE NAME: Electronic Solder

C. METHOD OF STORAGE: UNDERGROUND TANK___ ABOVE GROUND TANK___
BARRELS___ OTHER (specify) metal cans

D. QUANTITY STORED: 60 lbs.

E. WASTE DISPOSAL METHOD: SEWERED N/A HAULED___ ONSITE DISPOSAL___

F. IS THE WASTE TREATED PRIOR TO DISPOSAL: YES N/A NO___
If yes, method of treatment:

G. IS THE WASTE STORED PRIOR TO DISPOSAL: YES N/A NO___

A. CHEMICAL NAME: Lubricant B. COMMON/TRADE NAME: Skil Super Duty

C. METHOD OF STORAGE: UNDERGROUND TANK___ ABOVE GROUND TANK___
BARRELS___ OTHER (specify) plastic bottles

D. QUANTITY STORED: 12 qts.

E. WASTE DISPOSAL METHOD: SEWERED N/A HAULED___ ONSITE DISPOSAL___

F. IS THE WASTE TREATED PRIOR TO DISPOSAL: YES N/A NO___
If yes, method of treatment:

G. IS THE WASTE STORED PRIOR TO DISPOSAL: YES N/A NO___

A. CHEMICAL NAME: B. COMMON/TRADE NAME:

C. METHOD OF STORAGE: UNDERGROUND TANK___ ABOVE GROUND TANK___
BARRELS___ OTHER (specify)

D. QUANTITY STORED:

E. WASTE DISPOSAL METHOD: SEWERED___ HAULED___ ONSITE DISPOSAL___

F. IS THE WASTE TREATED PRIOR TO DISPOSAL: YES___ NO___
If yes, method of treatment:

G. IS THE WASTE STORED PRIOR TO DISPOSAL: YES___ NO___



109.0756

A. CHEMICAL NAME: Household Oil B. COMMON/TRADE NAME: Napthenic Oil

C. METHOD OF STORAGE: UNDERGROUND TANK____ ABOVE GROUND TANK____
BARRELS____ OTHER (specify) metal cans

D. QUANTITY STORED: 288 oz.

E. WASTE DISPOSAL METHOD: SEWERED N/A HAULED____ ONSITE DISPOSAL____

F. IS THE WASTE TREATED PRIOR TO DISPOSAL: YES N/A NO____
If yes, method of treatment:____

G. IS THE WASTE STORED PRIOR TO DISPOSAL: YES N/A NO____

A. CHEMICAL NAME: Graphite Powder B. COMMON/TRADE NAME: Lubricant

C. METHOD OF STORAGE: UNDERGROUND TANK____ ABOVE GROUND TANK____
BARRELS____ OTHER (specify) plastic tubes

D. QUANTITY STORED: 388 oz.

E. WASTE DISPOSAL METHOD: SEWERED N/A HAULED____ ONSITE DISPOSAL____

F. IS THE WASTE TREATED PRIOR TO DISPOSAL: YES N/A NO____
If yes, method of treatment:____

G. IS THE WASTE STORED PRIOR TO DISPOSAL: YES N/A NO____

A. CHEMICAL NAME: Fiberglass Wax B. COMMON/TRADE NAME: Wax

C. METHOD OF STORAGE: UNDERGROUND TANK____ ABOVE GROUND TANK____
BARRELS____ OTHER (specify) metal cans

D. QUANTITY STORED: 3 gal.

E. WASTE DISPOSAL METHOD: SEWERED N/A HAULED____ ONSITE DISPOSAL____

F. IS THE WASTE TREATED PRIOR TO DISPOSAL: YES N/A NO____
If yes, method of treatment:____

G. IS THE WASTE STORED PRIOR TO DISPOSAL: YES N/A NO____

109.0756

# BROWN AND CALDWELL

April 28, 1994

Regional Water Quality Control Board
Los Angeles Region
101 Centre Plaza Drive
Monterey Park, California 91754-2156

51/7418-03

**Attention:** **Mr. Eric Nupen**

**Subject:** **CITY OF GLENDALE**
**GRAYSON POWER PLANT**
**GLENDALE, CALIFORNIA 91206**

**RWQCB File # 109.0756**
**SITE QUARTERLY REPORT**
**JANUARY 1 - MARCH 31, 1994**

RECEIVED
94 MAY 10 PM 1:20
CALIFORNIA REGIONAL WATER
QUALITY CONTROL BOARD
LOS ANGELES REGION

Dear Mr. Nupen:

**BACKGROUND**

In response to a letter from the Regional Water Quality Control Board (RWQCB), dated June 3, 1992, the City of Glendale initiated a quarterly groundwater monitoring program at the Grayson Power Plant starting from the first quarter of 1993. The site is located near the intersection of the Golden State and the Ventura Freeways at 800 Airway Avenue, Glendale, California. The site is divided into two sections by the Verdugo Wash (**Figure 1** in **Attachment A**). The Grayson Power Plant is located north of the wash, with the Los Angeles River along the plant's western border. A phosphate removal plant is located south of the wash.

As part of the leak detection and tank monitoring program at the site, six groundwater monitoring wells (MW-1 through MW-6) were installed in November 1989 by ENSR Corporation of Camarillo, California. ENSR installed an additional well (MW-7) in March 1990. Two water supply wells were previously installed to provide water for the plant cooling towers. Production well #1 (PW-1) was installed in May 1947 by Barber Bridge Drilling Corporation, Ltd. Production well #2 (PW-2) was installed in June 1959 by Roscoe Moss Company. Currently, the water supply wells are used as a backup to reclaimed water supplied by the Los Angeles-Glendale Reclaimed Water Plant for water used in the cooling towers at the Grayson Power Plant.

Five additional monitoring wells (MW-8 through MW-12) were added to the site in December 1993 by Fugro McClelland, Inc. Four of these monitoring wells were placed within the property boundaries of the Grayson Power Plant and one (MW-8) was located up-gradient of the site.

Environmental Engineering And Consulting Technical Services
16755 Von Karman, Suite 200, Irvine, CA 92714-4918
(714) 660-1070 Fax (714) 474-0940

The groundwater monitoring program has resulted in four quarters of monitoring in 1993 for monitoring wells MW-1 through MW-6 and production wells PW-1 and PW-2. This quarter's monitoring was expanded to include monitoring wells MW-7 through MW-12.

## PROGRESS THIS PERIOD

During the first quarter of 1994, twelve groundwater monitoring wells (MW-1 through MW-12) and the two site production wells (PW-1 and PW-2) were gauged monthly and sampled once. Gauging took place on January 20, February 25, and March 17, 1994. Groundwater elevation data is presented in **Table 1, Attachment B**. Groundwater samples were collected from the wells on March 17, 1994.

No floating hydrocarbon product was detected in the monitoring wells during sampling. Refer to **Attachment C** for groundwater purging and sampling procedures, and copies of the field data and groundwater sample collection logs.

During the 4th quarter 1993 gauging activities, oil from water pump lubrication was found floating in the annulus between the solid well casing and the pump impeller shaft assembly in both production wells (PW-1 and PW-2). The oil/water interface is approximately 100 feet above the screened portion of the production water wells. During this quarters activities, the oil was sampled and analyzed to determine the potential sources of the oil.

Groundwater samples collected from the twelve monitoring wells and two production wells were analyzed by Brown and Caldwell Analytical (BCA) for halogenated volatile organic compounds (HVOC) using EPA Method 8010. Groundwater samples from MW-7 and the new monitoring wells MW-8 through MW-12 were analyzed for general chemistry parameters (chloride, ammonia, nitrate/nitrite, Ph, conductivity, sulfate, total suspended solids and turbidity), and for total recoverable petroleum hydrocarbons (TRPH) by EPA Method 418.1. In addition, oil samples from the two production wells were analyzed for hydrocarbons by the Simulated Distillation (EPA 8015 Modified) method to characterize the type of hydrocarbons. Copies of the official Analytical Laboratory Reports and Chain-of-Custody Record are included in **Attachment D**.

## PLANNED PROGRESS NEXT QUARTER

Monthly gauging of the new and existing groundwater monitoring wells (MW-1 through MW-12), and production wells (PW-1 and PW-2) will continue. Groundwater sampling and reporting will continue on a quarterly basis.

## DISCUSSION AND FINDINGS

### Groundwater Gradient and Flow

A groundwater contour map based on the gauging data collected March 17, 1994 is presented in **Figure 2**. The groundwater elevation data shown in the figure represents hydrostatic elevations of the first encountered (shallow) aquifer (between 30 and 60 feet below grade) beneath the Grayson

Power Plant. The contour map is computer generated (with a contour mapping program by AdCADD™) using a civil engineering program which calculates the distances and differences in head between combinations of three points. Contours are then created based on these calculations, assuming homogeneous and isotropic conditions. The overall groundwater flow direction determined by the computer program was to the primarily south. An average hydraulic gradient of approximately 0.0026 feet per lineal foot throughout most of the site was observed. This quarter's flow direction and gradient were similar to those observed during previous quarters.

Monitoring well MW-7 was not included in the development of the groundwater contour maps due to the unavailability of survey data for the well. Monitoring well MW-1 is not included because of the anomalously high groundwater elevation in this well relative to other wells on site. The factors that could have led to consistently higher than expected groundwater elevations at monitoring well MW-1 relative to the other monitoring wells are under investigation. A survey error is suspected as the cause. This issue will be resolved prior to the end of the second quarter of 1994. Production wells PW-1 and PW-2 groundwater elevation data were not used due to the fact that the production wells are constructed to draw water from a deeper aquifer (approximately from 135 to 400 feet below grade).

**Dissolved Hydrocarbons**

Results of the analytical laboratory analysis of the groundwater samples, as summarized in **Table 2**, revealed detectable HVOC concentrations in all the monitoring wells. The detected compounds included the following: 1,1 dichloroethene (1,1 DCE), 1,2 dichloroethane (1,2 DCA), carbon tetrachloride, chloroform, trichloroethane (TCE), and tetrachloroethane (PCE), 1,1,1-trichloroethane (1,1,1-TCA), 1,1-dichloroethane (1,1-DCA), trans-1,2-dichloroethene, and 1,1,2,2 Tetrachloroethane (1,1,2,2 PCA).

TCE is the HVOC constituent reported to be at elevated levels at monitoring wells MW-1, MW-2 and MW-3. **Figure 3** shows the isoconcentration map for dissolved TCE in the groundwater at the site based on the results of monitoring during this quarter. The results indicate higher levels around the center of the site and levels below laboratory detection levels at downgradient monitoring wells MW-4, MW-5 and MW-6 and upgradient monitoring well MW-8.

PCE is the only HVOC detected in the furthest downgradient well of the site (MW-7) during this quarter. An isoconcentration map for PCE is presented as **Figure 4**. As with TCE concentrations, the PCE concentrations are highest at the center of the subject site and decrease up- and down gradient of the subject site.

For MW-7 and MW-10, petroleum hydrocarbons were found with the concentration of 1.6 and 0.29 mg/ℓ, respectively. No other wells sampled and analyzed this quarter reported hydrocarbons concentrations above detectable levels.

Results of the analytical laboratory analysis of the groundwater samples from PW-1 and PW-2 revealed HVOC analyte concentrations including 1,1 DCE, TCE, PCE, carbon tetrachloride, and chloroform in these wells. As with the shallower wells, TCE is the most concentrated HVOC in this

zone. Concentrations for both TCE and PCE in each of the wells screened in the deeper wells is provided in **Figure 5**. An isoconcentration map for TCE and PCE is not provided for these wells due to the paucity of data (at least three data points are needed for contouring).

**General Chemistry**

The results of general chemistry analyses for monitoring well MW-7 and the new monitoring wells MW-8 through MW-12, as summarized in **Table 3**, indicate a water chemistry similar to wells previously analyzed (MW-1 through MW-6). Nitrate concentrations for the new wells were similar to lower concentrations recorded in wells MW-1 through MW-6 during the first two quarters of 1993 (See Table 2) ranging from 0.14 mg/ℓ to 29 mg/ℓ. Total suspended solids (TSS), conductivity and turbidity analyses in samples collected from the new wells were higher than historical analyses of existing wells. Based on past experience of wells on site, turbidity and TSS levels are expected to decrease during the next purge and sample episode.

**Free Phase Oil**

The analytical results by simulated distillation of the free phase oil in production wells PW-1 and PW-2 indicate that the majority of the oil consists of compounds of carbon chain C18 through C43 (See **Attachment D** for analytical results). The oils show predominant presence of hydrocarbons of C20 to C43 range and appear to match the characteristics of lubricating oils. Since this oil is found in the annulus space between the well casing and the pump shaft, it appears to be the lubricating oil for the production well pumps.

If you have any questions regarding this report please contact either Mr. Dhiru Patel or Mr. Rick Rees at (714) 660-1070.

Very truly yours,

BROWN AND CALDWELL

G. Richard Rees
Project Geologist

Dhiru Patel, P.E.
Project Manager

Attachments

cc: Mr. Nicolas R. Garr, City of Glendale

Regional Water Quality Control Board
Los Angeles Region
101 Centre Plaza Drive
Monterey Park, California 91754-2156

51/7418-05

**Attention:** **Ms. Mercedes Hsu**

**Subject:** **CITY OF GLENDALE**
**GRAYSON POWER PLANT**
**GLENDALE, CALIFORNIA 91206**

**RWQCB File # 109.0756**
**SITE QUARTERLY REPORT**
**July 1 - September 30, 1995**

Dear Ms. Hsu:

Activities conducted at the subject site during the third quarter of 1995 are discussed below.

## BACKGROUND

In response to a letter from the Regional Water Quality Control Board (RWQCB), dated June 3, 1992, the City of Glendale initiated a quarterly groundwater monitoring program at the Grayson Power Plant starting the first quarter of 1993. The site is located near the intersection of the Golden State and the Ventura Freeways at 634 Bekins Way, Glendale, California. The site is divided into two sections by the Verdugo Wash. The Grayson Power Plant is located north of the wash, with the Los Angeles River along the plant's western border. A phosphate removal plant is located south of the wash (**Figure 1** in **Attachment A**).

As part of the leak detection and tank monitoring program at the site, six groundwater monitoring wells (MW-1 through MW-6) were installed in November 1989 by ENSR Corporation of Camarillo, California. ENSR installed an additional well (MW-7) in March 1990. Two water supply wells were previously installed to provide water for the plant cooling towers. Production well #1 (PW-1) was installed in May 1947 by Barber Bridge Drilling Corporation, Ltd. Production well #2 (PW-2) was installed in June 1959 by Roscoe Moss Company. Currently, the water supply wells are used as a backup to reclaimed water supplied by the Los Angeles-Glendale Reclaimed Water Plant for water used in the cooling towers at the Grayson Power Plant.

Five additional monitoring wells (MW-8 through MW-12) were added to the site in December 1993 by Fugro McClelland, Inc. Four of these monitoring wells were placed within the property boundaries of the Grayson Power Plant and one (MW-8) was located up-gradient of the site.

The groundwater monitoring program has resulted in four quarters of monitoring in 1993 for monitoring wells MW-1 through MW-6 and production wells PW-1 and PW-2. The quarterly monitoring program was expanded to include monitoring wells MW-7 through MW-12 starting the first quarter of 1994. An additional up-gradient monitoring well, MW-13, was installed in May 1994 and has been included in the monitoring program since July 1994.

## PROGRESS THIS PERIOD

During the third quarter of 1995, thirteen groundwater monitoring wells (MW-1 through MW-13) and the two site production wells (PW-1 and PW-2) were gauged monthly and sampled once. Gauging took place on July 15, August 23 and September 11, 1995. Groundwater samples were collected from the wells on September 11 and 12, 1995. Groundwater elevation data are presented in **Table 1, Attachment B.**

No floating hydrocarbon product was detected in the monitoring wells prior to sampling or during monthly gauging. Refer to **Attachment C** for groundwater purging and sampling procedures, and copies of the field data and groundwater sample collection logs. The thickness of free phase hydrocarbons in the production well PW-1 ranged from 3.5 to 6.5 feet and from 0.5 to 1.0 foot in PW-2 during this quarter.

Groundwater samples collected from the thirteen monitoring wells and two production wells were analyzed by Brown and Caldwell Analytical (BCA) for halogenated volatile organic compounds (HVOC) using EPA Method 8010. The water quality parameters pH, turbidity, temperature, and specific conductance were measured in the field. Copies of the official Analytical Laboratory Reports and Chain-of-Custody Record are included in **Attachment D**, and the laboratory analyses are summarized in **Table 2, Attachment B**.

A soil gas survey and strataprobe groundwater sampling were conducted at the site to delineate the extent and source of these HVOCs in groundwater. Brown and Caldwell and Transglobal Environmental Geochemistry (TEG) conducted the work between May and July of 1995. The work was completed per guidelines recommended by the RWQCB for conducting soil gas surveys. The results of this investigation indicated that the trichloroethene (TCE) plume originates up-gradient of the City of Glendale property and that a source of HVOCs is at the Grayson Power Plant or the northern adjacent properties.

## PLANNED PROGRESS NEXT QUARTER

Monthly gauging of all groundwater monitoring wells (MW-1 through MW-13) and production wells (PW-1 and PW-2) will continue. Groundwater sampling and reporting will continue on a quarterly basis.

## DISCUSSION AND FINDINGS

### Groundwater Gradient and Flow

Groundwater contour maps, based on the gauging data collected July 15, August 23, and September 11, 1995 are presented in **Figure 2, Figure 3 and Figure 4**, respectively. The groundwater elevation data shown in these figures represent hydrostatic elevations of the first encountered (shallow) aquifer (between 25 and 40 feet below grade) beneath the Grayson Power Plant. The contour map is computer generated using a civil engineering program (AdCADD™) which calculates the distances and differences in head between combinations of three points. Contours are then created based on these calculations, assuming homogeneous and isotropic conditions.

The groundwater flow direction and gradient this quarter were similar to previous quarters. A summary of the results for the three months is as follows.

- The groundwater flow direction in the shallow aquifer on July 15, 1995, as determined by the computer program, varied from the east-southeast to the south with an overall flow direction toward the southeast. The gradient averaged 0.0025 feet per linear foot (ft/ft) during this period.

- On August 23, 1995, the groundwater flow direction ranged from south to southeast with an average gradient of 0.0025 ft/ft.

- The September 1995 groundwater flow direction was similar to August's flow direction with an average gradient of 0.0027 ft/ft.

Production wells PW-1 and PW-2 groundwater elevation data were not used in these contour maps due to the fact that the production wells are constructed to draw water from a deeper aquifer (approximately from 135 to 400 feet below grade).

### Dissolved Hydrocarbons

Results of the analytical laboratory analysis of the groundwater samples, as summarized in **Table 2**, revealed detectable HVOC concentrations in the monitoring wells. The detected compounds included the following: 1,1 dichloroethene (1,1 DCE), 1,2 dichloroethane (1,2 DCA), carbon tetrachloride, chloroform, trichloroethene (TCE), and tetrachloroethene (PCE), 1,1-dichloroethane (1,1-DCA), cis-1,2 dichloroethene (cis 1,2 DCE) and trichloroflouromethane (TCFA). Methylene chloride was detected in monitoring well MW-11 at a concentration of 27 $\mu g/\ell$ this quarter. This compound has not been detected at the site since quarterly groundwater monitoring began in the first quarter of 1993.

The estimated shape and concentration gradient of the dissolved HVOC plume is similar to the previous quarter (second quarter) report and is also based upon additional data collected during the soil gas survey and strataprobe groundwater sampling. The strataprobe groundwater sampling

indicated that the highest concentrations of TCE were located up-gradient of the Grayson Power Plant and City Maintenance facility. The highest TCE concentrations encountered during groundwater sampling with the strataprobe (3,000 $\mu g/\ell$) were detected at the recycling facility along Flower Street and at the fire department training center, south of Flower Street (*Soil Vapor Assessment and Groundwater Sampling at the Grayson Power Plant/ Corporate Service Yard*, report in progress).

**Figure 5** shows the site isoconcentration map for dissolved TCE in the shallow aquifer and is based on the analytical results from this quarter. As in previous quarters, the low or non-detectable concentrations (all <0.05 ug/l this quarter) of TCE were encountered in the southeast corner of the site (MW-4, MW-5, MW-6, MW-7). Also, as in previous quarters, the highest concentrations (760 to 1,500 $\mu g/\ell$) of TCE were encountered in the central portion of the site (MW-1, MW-2, and MW-3). However, MW-11 also revealed high concentrations of TCE (1,200 ug/l) in the south portion of the site. The increase in TCE concentrations in MW-11 is similar to the increase in TCE concentrations detected in MW-10 (located upgradient of MW-11) in June 1994.

**Figure 6** shows the site isocentration map for dissolved PCE in the shallow aquifer and is based on the analytical results from this quarter. As in previous quarters, low concentrations (<0.05 to 0.86 $\mu g/\ell$) of PCE were encountered in the southeast corner of the site (MW-4, MW-5, MW-6, MW-7). Concentrations of PCE in the upgradient wells (MW-8 and MW-13) remained at the same relatively low levels as the previous two quarters. All other wells except MW-3 and MW-11 indicated relatively little change compared to the previous two quarters. Wells MW-3 and MW-11 showed decreases in the PCE concentrations compared to the last quarter (second quarter). However, last quarters results were anomalously high for PCE in these wells. This quarters results are consistent with those observed in the wells prior to the second quarter groundwater sampling.

Results of the analytical laboratory analysis of the groundwater samples from PW-1 and PW-2, screened in a lower aquifer, indicated HVOC analyte concentrations of TCE and PCE. Concentrations of TCE and PCE for both PW-1 and PW-2 are provided in **Figure 7**. Concentrations of PCE have remained relatively the same since groundwater monitoring was initiated in the first quarter of 1993. Concentrations of TCE have been generally decreasing since June 17, 1993. An isoconcentration map for TCE and PCE is not provided for these wells due to the paucity of data (at least three data points are needed for contouring).

**General Chemistry**

Except for field measurements of pH, turbidity and conductivity, no additional analyses for general chemistry were obtained this quarter. Results of stabilized field measured turbidity and pH are provided in **Table 3, Attachment B**. Based on our discussions with the RWQCB, the general chemistry data reported for the previous quarters established sufficient levels of information needed to define the trend. Consequently, there is no need for analyzing samples for general chemistry.

If you have any questions regarding this report please contact either Mr. Dhiru Patel or Mr. Rick Rees at (714) 660-1070.

Very truly yours,

BROWN AND CALDWELL

G. Richard Rees
Project Geologist

Dhiru Patel, P.E.
Project Manager

Attachments (4)

cc: Mr. Nicolas P. Cruz, City of Glendale

BROWN AND CALDWELL

F 950194
109.0756
MH

July 27, 1995

Regional Water Quality Control Board
Los Angeles Region
101 Centre Plaza Drive
Monterey Park, California 91754-2156

51/7418-05

RECEIVED
95 AUG -2 PM 2:28
CALIFORNIA REGIONAL WATER QUALITY CONTROL BOARD
LOS ANGELES REGION

**Attention:** **Ms. Mercedes Hsu**

**Subject:** **CITY OF GLENDALE**
**GRAYSON POWER PLANT**
**GLENDALE, CALIFORNIA 91206**

**RWQCB File # 109.0756**
**SITE QUARTERLY REPORT**
**April 1 - June 30, 1995**

Dear Ms. Hsu:

Activities conducted at the subject site during the second quarter of 1995 are discussed below.

**BACKGROUND**

In response to a letter from the Regional Water Quality Control Board (RWQCB), dated June 3, 1992, the City of Glendale initiated a quarterly groundwater monitoring program at the Grayson Power Plant starting the first quarter of 1993. The site is located near the intersection of the Golden State and the Ventura Freeways at 634 Bekins Way, Glendale, California. The site is divided into two sections by the Verdugo Wash. The Grayson Power Plant is located north of the wash, with the Los Angeles River along the plant's western border. A phosphate removal plant is located south of the wash (**Figure 1** in **Attachment A**).

As part of the leak detection and tank monitoring program at the site, six groundwater monitoring wells (MW-1 through MW-6) were installed in November 1989 by ENSR Corporation of Camarillo, California. ENSR installed an additional well (MW-7) in March 1990. Two water supply wells were previously installed to provide water for the plant cooling towers. Production well #1 (PW-1) was installed in May 1947 by Barber Bridge Drilling Corporation, Ltd. Production well #2 (PW-2) was installed in June 1959 by Roscoe Moss Company. Currently, the water supply wells are used as a backup to reclaimed water supplied by the Los Angeles-Glendale Reclaimed Water Plant for water used in the cooling towers at the Grayson Power Plant.

Five additional monitoring wells (MW-8 through MW-12) were added to the site in December 1993 by Fugro McClelland, Inc. Four of these monitoring wells were placed within the property boundaries of the Grayson Power Plant and one (MW-8) was located up-gradient of the site.

Environmental Engineering And Consulting • Analytical Services
16735 Von Karman, Suite 200, Irvine, CA 92714-4918
(714) 660-1070 Fax (714) 474-0940

The groundwater monitoring program has resulted in four quarters of monitoring in 1993 for monitoring wells MW-1 through MW-6 and production wells PW-1 and PW-2. The quarterly monitoring program was expanded to include monitoring wells MW-7 through MW-12 starting the first quarter of 1994. An additional up-gradient monitoring well, MW-13, was installed in May 1994 and has been included in the monitoring program since July 1994.

## PROGRESS THIS PERIOD

During the second quarter of 1995, thirteen groundwater monitoring wells (MW-1 through MW-13) and the two site production wells (PW-1 and PW-2) were gauged monthly and sampled once. Gauging took place on May 12, May 25, and June 13, 1995. Groundwater samples were collected from the wells on June 13 and 14, 1995. Groundwater elevation data are presented in **Table 1, Attachment B.**

No floating hydrocarbon product was detected in the monitoring wells prior to sampling or during monthly gauging. Refer to **Attachment C** for groundwater purging and sampling procedures, and copies of the field data and groundwater sample collection logs. The thickness of free phase hydrocarbons in the production well PW-1 was 4.4 feet and ranged from 1.4 to 7.4 feet in PW-2.

Groundwater samples collected from the thirteen monitoring wells and two production wells were analyzed by Brown and Caldwell Analytical (BCA) for halogenated volatile organic compounds (HVOC) using EPA Method 8010. The water quality parameters pH, turbidity, and specific conductance were measured in the field. Copies of the official Analytical Laboratory Reports and Chain-of-Custody Record are included in **Attachment D**, and the laboratory analyses are summarized in **Table 2, Attachment B**.

A soil gas survey and strataprobe groundwater sampling were conducted at the site to delineate the extent of the HVOCs in groundwater and to assess the source of these HVOCs. Brown and Caldwell and Transglobal Environmental Geochemistry (TEG) conducted the work between May and July of 1995. The work was completed per guidelines recommended by the RWQCB for conducting soil gas surveys. The results of this investigation indicated that the trichloroethene (TCE) plume originates up-gradient of the City of Glendale property and that a source of HVOCs is not located on City of Glendale property.

## PLANNED PROGRESS NEXT QUARTER

Monthly gauging of all groundwater monitoring wells (MW-1 through MW-13) and production wells (PW-1 and PW-2) will continue. Groundwater sampling and reporting will continue on a quarterly basis. The report detailing the results of the soil gas survey and groundwater geoprobe sampling will be submitted during the third quarter of 1995.

## DISCUSSION AND FINDINGS

### Groundwater Gradient and Flow

Groundwater contour maps, based on the gauging data collected May 12, May 25, and June 14, 1995 are presented in **Figure 2, Figure 3 and Figure 4**, respectively. The groundwater elevation data shown in these figures represent hydrostatic elevations of the first encountered (shallow) aquifer (between 30 and 40 feet below grade) beneath the Grayson Power Plant. The contour map is computer generated (with a contour mapping program by AdCADD™) using a civil engineering program which calculates the distances and differences in head between combinations of three points. Contours are then created based on these calculations, assuming homogeneous and isotropic conditions.

The groundwater flow direction and gradient this quarter were similar to previous quarters. A summary of the results for the three months is as follows.

- The groundwater flow direction in the shallow aquifer on May 12, 1995, as determined by the computer program, varied from the east-southeast to south-southeast with an overall flow direction toward the southeast. The gradient averaged 0.0035 feet per linear foot (ft/ft) during this period.

- On May 25, 1995, the groundwater flow direction ranged from south to southeast with an average gradient of 0.0032 ft/ft.

- The June 1995 groundwater flow direction was similar to May's flow direction with an average gradient of 0.0034 ft/ft.

Production wells PW-1 and PW-2 groundwater elevation data were not used in these contour maps due to the fact that the production wells are constructed to draw water from a deeper aquifer (approximately from 135 to 400 feet below grade).

### Dissolved Hydrocarbons

Results of the analytical laboratory analysis of the groundwater samples, as summarized in **Table 2**, revealed detectable HVOC concentrations in the monitoring wells. The detected compounds included the following: 1,1 dichloroethene (1,1 DCE), 1,2 dichloroethane (1,2 DCA), carbon tetrachloride, chloroform, trichloroethene (TCE), and tetrachloroethene (PCE), 1,1-dichloroethane (1,1-DCA), cis-1,2 dichloroethene (cis 1,2 DCE) and trichloroflouromethane (TCFA).

The estimated shape and concentration gradient of the dissolved HVOC plume differs from previous quarterly reports as a result of data collected during the soil gas survey and geoprobe groundwater sampling. The geoprobe groundwater sampling indicated that the highest concentrations of TCE were located up-gradient of the Grayson Power Plant and City Maintenance facility. The highest TCE concentrations encountered (3,000 $\mu g/\ell$) were detected at the recycling

facility along Flower Street and at the fire department training center, south of Flower Street. The report describing the results of this investigation is in preparation.

**Figure 5** shows the site isoconcentration map for dissolved TCE in the shallow aquifer and is based on the analytical results from this quarter. As in previous quarters, the lowest concentrations (<0.05 to 1.7 $\mu g/\ell$) of TCE were encountered in the southeast corner of the site (MW-4, MW-5, MW-6, MW-7). Also, as in previous quarters, the highest concentrations (600 to 1,100 $\mu g/\ell$) of TCE were encountered in the central portion of the site (MW-1, MW-2, and MW-3). Upgradient wells (MW-8 and MW-13) indicated significant decreases of TCE concentrations compared to previous quarters. Concentrations of TCE in MW-8 went from 190 $\mu g/\ell$ last quarter to 48 $\mu g/\ell$ this quarter and from 240 $\mu g/\ell$ last quarter to 150 $\mu g/\ell$ this quarter in MW-13.

**Figure 6** shows the site isocentration map for dissolved PCE in the shallow aquifer and is based on the analytical results from this quarter. As in previous quarters, low concentrations (<0.05 to 1.5 $\mu g/\ell$) of PCE were encountered in the southeast corner of the site (MW-4, MW-5, MW-6, MW-7). Concentrations of PCE in the upgradient wells (MW-8 and MW-13) remained at the same relatively low levels as the last two quarters. All other wells except MW-3 and MW-11 indicated relatively little change compared to the previous two quarters. Wells MW-3 and MW-11 showed significant increases in PCE concentrations compared to the last two quarters. Concentrations of PCE in MW-3 went from 8.9 $\mu g/\ell$ last quarter to 120 $\mu g/\ell$ this quarter and from 27 $\mu g/\ell$ last quarter to 260 $\mu g/\ell$ this quarter in MW-11.

Results of the analytical laboratory analysis of the groundwater samples from PW-1 and PW-2, screened in a lower aquifer, indicated HVOC analyte concentrations of 1,1 DCE, TCE, PCE, carbon tetrachloride, and chloroform. Concentrations of TCE and PCE for both PW-1 and PW-2 are provided in **Figure 7**. Concentrations of PCE have remained relatively the same since groundwater monitoring was initiated in the first quarter of 1993. Concentrations of 1,1 DCE have remained at low levels for the last three quarters. Concentrations of TCE have been generally decreasing since June 17, 1993. An isoconcentration map for TCE and PCE is not provided for these wells due to the paucity of data (at least three data points are needed for contouring).

**General Chemistry**

Except for field measurements of pH, turbidity and conductivity, no additional analyses for general chemistry were obtained this quarter. Results of stabilized field measured turbidity and pH are provided in **Table 3, Attachment B**. Based on our discussions with the RWQCB, the general chemistry data reported for the previous quarters established sufficient levels of information needed to define the trend. Consequently, there is no need for analyzing samples for general chemistry.

F950121
109.0756
MH

April 25, 1995

Regional Water Quality Control Board
Los Angeles Region
101 Centre Plaza Drive
Monterey Park, California 91754-2156

51/7418-05

**Attention:** **Ms. Mercedes Hsu**

**Subject:** **CITY OF GLENDALE**
**GRAYSON POWER PLANT**
**GLENDALE, CALIFORNIA 91206**

**RWQCB File # 109.0756**
**SITE QUARTERLY REPORT**
**January 1 - March 31, 1995**

Dear Ms. Hsu:

Activities conducted at the subject site during the first quarter of 1995 are discussed below.

## BACKGROUND

In response to a letter from the Regional Water Quality Control Board (RWQCB), dated June 3, 1992, the City of Glendale initiated a quarterly groundwater monitoring program at the Grayson Power Plant starting the first quarter of 1993. The site is located near the intersection of the Golden State and the Ventura Freeways at 634 Bekins Way, Glendale, California. The site is divided into two sections by the Verdugo Wash. The Grayson Power Plant is located north of the wash, with the Los Angeles River along the plant's western border. A phosphate removal plant is located south of the wash (**Figure 1** in **Attachment A**).

As part of the leak detection and tank monitoring program at the site, six groundwater monitoring wells (MW-1 through MW-6) were installed in November 1989 by ENSR Corporation of Camarillo, California. ENSR installed an additional well (MW-7) in March 1990. Two water supply wells were previously installed to provide water for the plant cooling towers. Production well #1 (PW-1) was installed in May 1947 by Barber Bridge Drilling Corporation, Ltd. Production well #2 (PW-2) was installed in June 1959 by Roscoe Moss Company. Currently, the water supply wells are used as a backup to reclaimed water supplied by the Los Angeles-Glendale Reclaimed Water Plant for water used in the cooling towers at the Grayson Power Plant.

Five additional monitoring wells (MW-8 through MW-12) were added to the site in December 1993 by Fugro McClelland, Inc. Four of these monitoring wells were placed within the property boundaries of the Grayson Power Plant and one (MW-8) was located up-gradient of the site.

The groundwater monitoring program has resulted in four quarters of monitoring in 1993 for monitoring wells MW-1 through MW-6 and production wells PW-1 and PW-2. The quarterly monitoring program was expanded to include monitoring wells MW-7 through MW-12 starting the first quarter of 1994. An additional up-gradient monitoring well, MW-13, was installed in May 1994 and has been included in the monitoring program since July 1994.

## PROGRESS THIS PERIOD

During the first quarter of 1995, thirteen groundwater monitoring wells (MW-1 through MW-13) and the two site production wells (PW-1 and PW-2) were gauged monthly and sampled once. Gauging took place on January 20, February 23, and March 14, 1995. Groundwater samples were collected from the wells on March 14, 1995. Groundwater elevation data are presented in **Table 1, Attachment B.**

No floating hydrocarbon product was detected in the monitoring wells prior to sampling or during monthly gauging. Refer to **Attachment C** for groundwater purging and sampling procedures, and copies of the field data and groundwater sample collection logs. The thickness of free phase hydrocarbons in the production well PW-1 ranged from 3 to 3.5 feet and well PW-2 ranged from 0.75 to 1.0 foot during the quarter.

Groundwater samples collected from the thirteen monitoring wells and two production wells were analyzed by Brown and Caldwell Analytical (BCA) for halogenated volatile organic compounds (HVOC) using EPA Method 8010. The water quality parameters pH, turbidity, and specific conductance were measured in the field. Copies of the official Analytical Laboratory Reports and Chain-of-Custody Record are included in **Attachment D**, and the laboratory analyses are summarized in **Table 2, Attachment B**.

## PLANNED PROGRESS NEXT QUARTER

Monthly gauging of all groundwater monitoring wells (MW-1 through MW-13), and production wells (PW-1 and PW-2) will continue. Groundwater sampling and reporting will continue on a quarterly basis.

## DISCUSSION AND FINDINGS

### Groundwater Gradient and Flow

Groundwater contour maps, based on the gauging data collected January 20, February 23, and March 14, 1995 are presented in **Figure 2, Figure 3 and Figure 4**, respectively. The groundwater elevation data shown in these figures represent hydrostatic elevations of the first encountered (shallow) aquifer (between 30 and 40 feet below grade) beneath the Grayson Power Plant. The contour map is computer generated (with a contour mapping program by AdCADD™) using a civil engineering program which calculates the distances and differences in head between combinations of three points.

Contours are then created based on these calculations, assuming homogeneous and isotropic conditions.

The groundwater flow direction and gradient this quarter were similar to previous quarters. A summary of the results for the three months is as follows.

- The groundwater flow direction in the shallow aquifer in January 1995, as determined by the computer program, varied from the east-southeast to south-southeast with an overall flow direction toward the southeast. The gradient averaged 0.0031 feet per linear foot (ft/ft) during this period.

- In February 1995, the groundwater flow direction ranged from south to south-southeast with an average gradient of 0.0036 ft/ft. The measured water level in MW-3, was approximately 1.0 foot higher than previous and subsequent calculated values in January and March. The discrepancy was probably due to an error in the February field gauging of the wells. The calculated groundwater elevation for monitoring well MW-3 was not included in the contouring data set in February.

- The March 1995, groundwater flow direction was similar to January's flow direction with an average gradient of 0.0030 ft/ft.

Production wells PW-1 and PW-2 groundwater elevation data were not used in these contour maps due to the fact that the production wells are constructed to draw water from a deeper aquifer (approximately from 135 to 400 feet below grade).

**Dissolved Hydrocarbons**

Results of the analytical laboratory analysis of the groundwater samples, as summarized in **Table 2**, revealed detectable HVOC concentrations in the monitoring wells. The detected compounds included the following: 1,1 dichloroethene (1,1 DCE), 1,2 dichloroethane (1,2 DCA), carbon tetrachloride, chloroform, trichloroethene (TCE), and tetrachloroethene (PCE), 1,1,1-trichloroethane (1,1,1-TCA), 1,4-dichlorobenzene, freon 113, 1,1-dichloroethane (1,1-DCA), cis-1,2 dichloroethene (cis 1,2 DCE) and trichloroflouromethane (TCFA). The analytical results for this quarter indicate 0.84 $\mu g/\ell$ freon 113 and 0.57 $\mu g/\ell$ 1,4-dichlorobenzene in MW-4, which are not shown on **Table 2**.

TCE and/or the associated PCE are reported in all wells, except MW-7, sampled and analyzed this quarter. **Figure 5** shows the isoconcentration map for dissolved TCE in the groundwater at the site based on the analytical results from this quarter. Monitoring well MW-2 indicated the largest increase in HVOCs with TCE increasing from 1200 $\mu g/\ell$ last quarter to 1500 $\mu g/\ell$ this quarter. Monitoring well MW-10, however, has had the largest fluctuations in the TCE concentrations since June 1994; ranging from 1,700 $\mu g/\ell$ in June 1994 to 110 $\mu g/\ell$ in September 1994, and from 960 $\mu g/\ell$ in December 1994 to 240 $\mu g/\ell$ in March 1995. The up-gradient well MW-8 indicated a consistent increase in the TCE concentrations since the well was first sampled in December 1993.

Concentrations ranged from 33 $\mu g/\ell$ to 103 $\mu g/\ell$ in the previous quarters and were reported at 190 $\mu g/\ell$ this quarter. Similar to last quarter, down-gradient well MW-4 indicated low concentrations of TCE (less than the California maximum contaminant level for drinking water). Monitoring wells MW-5, MW-6 and MW-7 indicated non-detectable levels of TCE, similar to levels encountered in the first two quarters of 1994.

PCE concentrations are shown on the isoconcentration map presented in **Figure 6**. The PCE concentrations this quarter generally remained consistent with the previous quarter with localized slight increases and decreases. PCE concentrations encountered in monitoring wells MW-3 through MW-8 remained somewhat consistent with levels from the previous quarter. Monitoring wells MW-1, MW-2, MW-9, MW-10, and MW-13, indicated measurable PCE concentration decreases. Monitoring wells MW-11 and MW-12 indicated PCE concentration increases for the quarter. The highest levels of PCE was reported at MW-11 (27 $\mu g/\ell$).

Results of the analytical laboratory analysis of the groundwater samples from PW-1 and PW-2, screened in a lower aquifer, indicated HVOC analyte concentrations of 1,1 DCE, TCE, and PCE. Concentrations of TCE and PCE for both PW-1 and PW-2 are provided in **Figure 7**. Concentrations for both TCE and PCE decreased slightly in PW-1 and PW-2 from the levels reported the previous quarters. An isoconcentration map for TCE and PCE is not provided for these wells due to the paucity of data (at least three data points are needed for contouring).

**General Chemistry**

Except for field measurements of pH and turbidity, no additional analyses for general chemistry were obtained this quarter. Results of stabilized field measured turbidity and pH are provided in **Table 3, Attachment B**. Based on our discussions with the RWQCB, the general chemistry data reported for the previous quarters established sufficient levels of information needed to define the trend. Consequently, there is no need for analyzing samples for general chemistry.

If you have any questions regarding this report please contact either Mr. Dhiru Patel or Mr. Rick Rees at (714) 660-1070.

Very truly yours,
BROWN AND CALDWELL

G. Richard Rees
Project Geologist

Dhiru Patel, P.E.
Project Manager

Attachments (4)

cc: Mr. Nicolas P. Cruz, City of Glendale

BROWN AND CALDWELL

July 26, 1994

Regional Water Quality Control Board
Los Angeles Region
101 Centre Plaza Drive
Monterey Park, California 91754-2156

51/7418-03

**Attention:** **Ms. Mercedes Hsu**

**Subject:** **CITY OF GLENDALE**
**GRAYSON POWER PLANT**
**GLENDALE, CALIFORNIA 91206**

**RWQCB File # 109.0756**
**SITE QUARTERLY REPORT**
**APRIL 1 - JUNE 30, 1994**

Dear Ms. Hsu:

## BACKGROUND

In response to a letter from the Regional Water Quality Control Board (RWQCB), dated June 3, 1992, the City of Glendale initiated a quarterly groundwater monitoring program at the Grayson Power Plant starting the first quarter of 1993. The site is located near the intersection of the Golden State and the Ventura Freeways at 800 Airway Avenue, Glendale, California (**Figure 1** in **Attachment A**). The site is divided into two sections by the Verdugo Wash. The Grayson Power Plant is located north of the wash, with the Los Angeles River along the plant's western border. A phosphate removal plant is located south of the wash (**Figure 2** in **Attachment A**).

As part of the leak detection and tank monitoring program at the site, six groundwater monitoring wells (MW-1 through MW-6) were installed in November 1989 by ENSR Corporation of Camarillo, California. ENSR installed an additional well (MW-7) in March 1990. Two water supply wells were previously installed to provide water for the plant cooling towers. Production well #1 (PW-1) was installed in May 1947 by Barber Bridge Drilling Corporation, Ltd. Production well #2 (PW-2) was installed in June 1959 by Roscoe Moss Company. Currently, the water supply wells are used as a backup to reclaimed water supplied by the Los Angeles-Glendale Reclaimed Water Plant for water used in the cooling towers at the Grayson Power Plant.

Five additional monitoring wells (MW-8 through MW-12) were added to the site in December 1993 by Fugro McClelland, Inc. Four of these monitoring wells were placed within the property boundaries of the Grayson Power Plant and one (MW-8) was located up-gradient of the site.

The groundwater monitoring program has resulted in four quarters of monitoring in 1993 for monitoring wells MW-1 through MW-6 and production wells PW-1 and PW-2. The quarterly monitoring program was expanded to include monitoring wells MW-7 through MW-12 starting the first quarter of 1994.

Environmental Engineering And Consulting • Analytical Services
16735 Von Karman, Suite 200, Irvine, CA 92714-4918
(714) 660-1070 Fax (714) 474-0940

## PROGRESS THIS PERIOD

During the second quarter of 1994, twelve groundwater monitoring wells (MW-1 through MW-12) and the two site production wells (PW-1 and PW-2) were gauged monthly and sampled once. Gauging took place on April 22, May 27, and June 22, 1994. Groundwater samples were collected from the wells on June 22, and June 23, 1994. An additional up-gradient well MW-13 was completed by Fugro West Inc during the second quarter. This new well and several existing wells were resurveyed during this quarters activities, resulting in an updated survey elevation for monitoring well MW-1, and monitoring well MW-7. Groundwater elevation data is presented in **Table 1, Attachment B.**

No floating hydrocarbon product was detected in the monitoring wells during sampling. Refer to **Attachment C** for groundwater purging and sampling procedures, and copies of the field data and groundwater sample collection logs. The thickness of free phase oil in the production wells PW-1 and PW-2 was 3.5 feet and 2.5 feet, respectively this quarter. The oil in these production wells show predominant presence of hydrocarbons of C20 to C43 range and appear to match the characteristics of lubricating oils (see First Quarter, 1994 Monitoring Report).

Groundwater samples collected from the twelve monitoring wells and two production wells were analyzed by Brown and Caldwell Analytical (BCA) for halogenated volatile organic compounds (HVOC) using EPA Method 8010, and for the water quality parameters pH, specific conductivity, and turbidity. Copies of the official Analytical Laboratory Reports and Chain-of-Custody Record are included in **Attachment D**, and the laboratory analyses are summarized in **Table 2, Attachment B**. A groundwater sample from the newly installed well MW-13 was also analyzed for the components listed above as well as for general chemistry parameters (chloride, ammonia, nitrate/nitrite, pH, conductivity, sulfate, and turbidity), and for total recoverable petroleum hydrocarbons (TRPH) by EPA Method 418.1. The results of these analyses are summarized in **Table 2, Attachment B**; the official laboratory report and chain-of-custody information for samples collected from MW-13 are included in the Fugro West, Inc. report titled *"Addendum to Subsurface Soils and Hydrogeologic Investigation - Grayson Power Plant - June 1994"* that details the construction of this well.

## PLANNED PROGRESS NEXT QUARTER

Monthly gauging of the new and existing groundwater monitoring wells (MW-1 through MW-12), and production wells (PW-1 and PW-2) will continue. Groundwater sampling and reporting will continue on a quarterly basis.

## DISCUSSION AND FINDINGS

### Groundwater Gradient and Flow

A groundwater contour map based on the gauging data collected June 22, 1994 is presented in **Figure 2.** The groundwater elevation data shown in the figure represents hydrostatic elevations of the first encountered (shallow) aquifer (between 30 and 60 feet below grade) beneath the Grayson Power Plant. The contour map is computer generated (with a contour mapping program by AdCADD™)

using a civil engineering program which calculates the distances and differences in head between combinations of three points. Contours are then created based on these calculations, assuming homogeneous and isotropic conditions. The first attempt at contouring yielded groundwater mounds at monitoring wells MW-1 and MW-9 and a steep gradient between MW-7 and MW-5. This observation did not agree with previous observations or with any general expectation. Deleting the three wells from the groundwater contour data set yielded a more reasonable contour map of the water table elevation. Possible explanations for the discrepancy in the groundwater elevations include field or equipment error in measuring the depth to water or fluctuations in the groundwater during the gauging. In order to verify the June 1994 groundwater contour map, a groundwater contour map based on gauging data collected on May 27, 1994 was constructed and is presented in **Figure 3**. This map includes all wells with the exception of MW-9. Monitoring well MW-9 indicated a groundwater high that did not fit with the observations from 11 other wells.

The overall groundwater flow direction determined by the computer program was to toward the south for June 1994. In May 1994, the groundwater flow direction varies from the south-southeast to the south-southwest with an average flow direction toward the south. An average hydraulic gradient of approximately 0.0026 feet per linear foot (ft/ft) throughout most of the site was observed in June 1994. An average groundwater gradient of 0.0023 (ft/ft) is observed in May 1994. This quarter's flow direction and gradient were similar to those observed during previous quarters.

Production wells PW-1 and PW-2 groundwater elevation data were not used in these contour maps due to the fact that the production wells are constructed to draw water from a deeper aquifer (approximately from 135 to 400 feet below grade).

**Dissolved Hydrocarbons**

Results of the analytical laboratory analysis of the groundwater samples, as summarized in **Table 2**, revealed detectable HVOC concentrations in the monitoring wells including the newly installed up-gradient monitoring well MW-13. The detected compounds included the following: 1,1 dichloroethene (1,1 DCE), 1,2 dichloroethane (1,2 DCA), carbon tetrachloride, chloroform, trichloroethene (TCE), and tetrachloroethene (PCE), 1,1,1-trichloroethane (1,1,1-TCA), 1,1-dichloroethane (1,1-DCA), trans-1,2-dichloroethene (tran. 1,2 DCE), and 1,1,2,2 Tetrachloroethane (1,1,2,2 PCA). The analytical results for this quarter indicate 1 µg/ℓ dichlorodifluoromethane in monitoring well MW-6 and 1.3 µg/ℓ trichlorofluoromethane in monitoring well MW-8. Since both of these compounds are commonly used in laboratories as a digestive compound for soil analyses and neither of the compounds were detected previously in the samples, the presence of these compounds in concentrations close to the detection limits is questionable.

TCE and/or the associated PCE is reported in all wells sampled and analyzed this quarter. The concentrations of TCE have generally increased from the previous quarter. **Figure 4** shows the isoconcentration map for dissolved TCE in the groundwater at the site based on this quarters analytical results. Monitoring well MW-10 indicated the largest increase in HVOCs with TCE increasing from 480 µg/ℓ last quarter to 1700 µg/ℓ this quarter. Since the increase in TCE concentrations reported for MW-10 is unexpectedly large, additional sampling is necessary to confirm the trend towards higher TCE concentrations in this well. The up-gradient well MW-8 indicated an

increase in the TCE concentration from 47 µg/ℓ to 67 µg/ℓ and the newly installed well MW-13 indicated TCE concentrations at 340 µg/ℓ. Similar to last quarter, downgradient wells MW-4, MW-5 and MW-6 indicated non-detectable concentrations of TCE.

PCE concentrations are shown on the isoconcentration map presented in **Figure 5**. The highest levels of PCE were reported at MW-11 (37 µg/ℓ) and MW-10 (24 µg/ℓ). Concentrations of PCE in the newly installed well MW-13 is 8.4 µg/ℓ. Similar to last quarter, PCE is the only HVOC detected in the furthest well down-gradient of the site (MW-7) during this quarter. The concentration of PCE increased from 0.53 µg/ℓ to 14 µg/ℓ in MW-7. This increase in PCE concentrations will also be verified next quarter.

Results of the analytical laboratory analysis of the groundwater samples from PW-1 and PW-2 revealed HVOC analyte concentrations including 1,1 DCE, TCE, PCE, carbon tetrachloride, and chloroform in these wells. Concentrations for both TCE and PCE in each of the wells screened in the deeper aquifer is consistent with analytical results from the previous quarter with this quarter indicating a slight decrease in concentrations from the previous quarters. Concentrations of TCE and PCE for both PW-1 and PW-2 is provided in **Figure 6**. An isoconcentration map for TCE and PCE is not provided for these wells due to the paucity of data (at least three data points are needed for contouring).

Monitoring wells MW-7, MW-10 and MW-13 were analyzed for total recoverable petroleum hydrocarbons (TRPH) by EPA method 418.1. These results indicated an increase in the concentration of TRPH in MW-7 (from 1,600 µg/ℓ last quarter to 5,500 µg/ℓ this quarter) and a decrease in TRPH concentrations in MW-10 (from 290 µg/ℓ last quarter to <200 µg/ℓ this quarter). Results of TRPH analyses of MW-13 did not indicate TRPH above the laboratory detection limit (<1000 µg/ℓ).

**General Chemistry**

Sample analyses from samples collected on September 12, 1993 and December 16, 1993 indicated more than a four fold increase in the nitrate/nitrite concentrations for wells MW-1 through MW-6. This data was suspect because the analyses for other components of the general chemistry (sulfate, chloride, and conductivity) for the same period remained consistent with previous analyses. The laboratory that performed the analyses, BC Analytical, was contacted and it was determined that water analyses for nitrate/nitrite for samples collected on September 12, 1993 and December 16, 1993 were reported in error. The reported values were nitrate/nitrite as $NO_3$ rather than as N. The values have been corrected by dividing the reported $NO_3$ value by 4.43 (mass ration of $NO_3$ to N) in the historical analyses of the general chemistry provided as **Table 3, Attachment B**.

The results of general chemistry analyses for the new monitoring well (MW-13) is summarized with the historical analyses of general chemistry for all wells in **Table 3**. Comparison of the general chemistry of water from the new well with the general chemistry of existing wells indicates a water chemistry similar to wells previously analyzed (MW-1 through MW-12) with the exception of specific conductivity. The specific conductivity for MW-13 at 706 µmhos/cm is lower than any previous recording (1000 µmhos/cm, MW-5, 3-18-93).

Turbidity analyses in samples collected from the new well was higher than historical analyses of existing wells. Based on past experience of wells on site, turbidity levels are expected to decrease during the next purge and sample episode.

If you have any questions regarding this report please contact either Mr. Dhiru Patel or Mr. Rick Rees at (714) 660-1070.

Very truly yours,

BROWN AND CALDWELL

G. Richard Rees
Project Geologist

Dhiru Patel, P.E.
Project Manager

Attachments

cc: Mr. Nicolas P. Cruz, City of Glendale

109.0756
MH

# BROWN AND CALDWELL

October 21, 1994

Regional Water Quality Control Board
Los Angeles Region
101 Centre Plaza Drive
Monterey Park, California 91754-2156

51/7418-03

**Attention:** **Ms. Mercedes Hsu**

**Subject:** **CITY OF GLENDALE**
**GRAYSON POWER PLANT**
**GLENDALE, CALIFORNIA 91206**

**RWQCB File # 109.0756**
**SITE QUARTERLY REPORT**
**July 1 - September 30, 1994**

Dear Ms. Hsu:

## BACKGROUND

In response to a letter from the Regional Water Quality Control Board (RWQCB), dated June 3, 1992, the City of Glendale initiated a quarterly groundwater monitoring program at the Grayson Power Plant starting the first quarter of 1993. The site is located near the intersection of the Golden State and the Ventura Freeways at 800 Airway Avenue, Glendale, California. The site is divided into two sections by the Verdugo Wash. The Grayson Power Plant is located north of the wash, with the Los Angeles River along the plant's western border. A phosphate removal plant is located south of the wash (**Figure 1** in **Attachment A**).

As part of the leak detection and tank monitoring program at the site, six groundwater monitoring wells (MW-1 through MW-6) were installed in November 1989 by ENSR Corporation of Camarillo, California. ENSR installed an additional well (MW-7) in March 1990. Two water supply wells were previously installed to provide water for the plant cooling towers. Production well #1 (PW-1) was installed in May 1947 by Barber Bridge Drilling Corporation, Ltd. Production well #2 (PW-2) was installed in June 1959 by Roscoe Moss Company. Currently, the water supply wells are used as a backup to reclaimed water supplied by the Los Angeles-Glendale Reclaimed Water Plant for water used in the cooling towers at the Grayson Power Plant.

Five additional monitoring wells (MW-8 through MW-12) were added to the site in December 1993 by Fugro McClelland, Inc. Four of these monitoring wells were placed within the property boundaries of the Grayson Power Plant and one (MW-8) was located up-gradient of the site.

The groundwater monitoring program has resulted in four quarters of monitoring in 1993 for monitoring wells MW-1 through MW-6 and production wells PW-1 and PW-2. The quarterly monitoring program was expanded to include monitoring wells MW-7 through MW-12 starting the first quarter of 1994. An additional up-gradient monitoring well, MW-13, was installed in May 1994.

Environmental Engineers And Consultants · Analytical Services
16735 Von Karman, Suite 200, Irvine, CA 92714-4918
(714) 660-1070 Fax (714) 474-0940

## PROGRESS THIS PERIOD

During the third quarter of 1994, thirteen groundwater monitoring wells (MW-1 through MW-13) and the two site production wells (PW-1 and PW-2) were gauged monthly and sampled once. Gauging took place on July 22, August 23, and September 22, 1994. Groundwater samples were collected from the wells on September 22, 23, and 24, 1994. Groundwater elevation data are presented in **Table 1, Attachment B**.

No floating hydrocarbon product was detected in the monitoring wells during sampling. Refer to **Attachment C** for groundwater purging and sampling procedures, and copies of the field data and groundwater sample collection logs. The thickness of free phase hydrocarbons in the production wells PW-1 and PW-2 were both 3.0 feet. The oil in these production wells show predominant presence of hydrocarbons of C20 to C43 range and appear to match the characteristics of lubricating oils (see First Quarter, 1994 Monitoring Report).

Groundwater samples collected from the thirteen monitoring wells and two production wells were analyzed by Brown and Caldwell Analytical (BCA) for halogenated volatile organic compounds (HVOC) using EPA Method 8010, and for the water quality parameters pH, and turbidity. Copies of the official Analytical Laboratory Reports and Chain-of-Custody Record are included in **Attachment D**, and the laboratory analyses are summarized in **Table 2, Attachment B**.

## PLANNED PROGRESS NEXT QUARTER

Monthly gauging of all groundwater monitoring wells (MW-1 through MW-13), and production wells (PW-1 and PW-2) will continue. Groundwater sampling and reporting will continue on a quarterly basis.

## DISCUSSION AND FINDINGS

### Groundwater Gradient and Flow

Groundwater contour maps, based on the gauging data collected July 22, August 23, and September 22, 1994 are presented in **Figure 2, Figure 3 and Figure 4**, respectively. The groundwater elevation data shown in these figures represent hydrostatic elevations of the first encountered (shallow) aquifer (between 30 and 60 feet below grade) beneath the Grayson Power Plant. The contour map is computer generated (with a contour mapping program by AdCADD™) using a civil engineering program which calculates the distances and differences in head between combinations of three points. Contours are then created based on these calculations, assuming homogeneous and isotropic conditions.

The groundwater flow direction and gradient this quarter was similar to previous quarters. A summary of the results for the three months is as follows.

- The groundwater flow direction in the shallow aquifer in July, as determined by the computer program, varied from the east-southeast to south-southeast with an overall flow direction

toward the southeast. The gradient averaged 0.0026 feet per linear foot (ft/ft) during this period. The measured water level in MW-10 was approximately one foot lower than previous measurements of the well and one foot lower than subsequent measurements in August and September. The discrepancy was probably due to an error in July's field gauging of the well. The calculated groundwater elevation for monitoring well MW-10 was not included in the contouring data set in July.

- In August 1994, the groundwater flow direction ranged from south to south-southeast with an average gradient of 0.0029 ft/ft.

- The September flow direction was similar to August's flow direction with an average gradient of 0.0026 ft/ft.

Production wells PW-1 and PW-2 groundwater elevation data were not used in these contour maps due to the fact that the production wells are constructed to draw water from a deeper aquifer (approximately from 135 to 400 feet below grade).

**Dissolved Hydrocarbons**

Results of the analytical laboratory analysis of the groundwater samples, as summarized in **Table 2**, revealed detectable HVOC concentrations in the monitoring wells including the newly installed up-gradient monitoring well MW-13. The detected compounds included the following: 1,1 dichloroethene (1,1 DCE), 1,2 dichloroethane (1,2 DCA), carbon tetrachloride, chloroform, trichloroethene (TCE), and tetrachloroethene (PCE), 1,1,1-trichloroethane (1,1,1-TCA), 1,1-dichloroethane (1,1-DCA), trans-1,2-dichloroethene (tran. 1,2 DCE), cis-1,2 dichloroethene, (cis 1,2 DCE), and 1,1,2,2 Tetrachloroethane (1,1,2,2 PCA).

The analytical results for last quarter indicated 1 $\mu g/\ell$ dichlorodifluoromethane (maximum contaminant level or MCL = 150 $\mu g/\ell$, California Drinking Water Standards, October 24, 1990) in monitoring well MW-6 and 1.3 $\mu g/\ell$ trichlorofluoromethane (MCL not available) in monitoring well MW-8. The presence of these compounds was questionable last quarter due to the low concentrations and the fact that the compounds had not been detected previously. This quarter, however, 0.56 $\mu g/\ell$ of trichlorofluoromethane was reported in monitoring well MW-3 and 1.3 $\mu g/\ell$ was reported again in MW-8. Dichlorodifluoromethane was not reported in any of the wells.

TCE and/or the associated PCE is reported in all wells sampled and analyzed this quarter with the exception of down-gradient monitoring well MW-7 which indicated non-detect for all analytes. **Figure 5** shows the isoconcentration map for dissolved TCE in the groundwater at the site based on this quarters analytical results. Monitoring well MW-10 indicated the largest decrease in HVOCs with TCE decreasing from 1700 $\mu g/\ell$ last quarter to 110 $\mu g/\ell$ this quarter. This quarters analytical results for TCE in MW-10 is more consistent with the fourth quarter 1993, and first quarter 1994 results (620 and 480 $\mu g/\ell$, respectively). The up-gradient well MW-8 indicated an increase in the TCE concentration from 67 $\mu g/\ell$ to 89 $\mu g/\ell$. Similar to last quarter, down-gradient wells MW-6 and MW-7 indicated non-detectable concentrations of TCE. Monitoring wells MW-4 and MW-5 indicated

TCE concentrations slightly above detection limits; TCE had been reported as non-detect in these wells during the last two quarters.

PCE concentrations are shown on the isoconcentration map presented in **Figure 6**. The PCE concentrations this quarter generally decrease from the previous quarter. Monitoring wells MW-1 and MW-10 concentration decreased from 10 and 24 $\mu g/\ell$, respectively, to non-detectable concentrations ($<0.5 \mu g/\ell$). The highest levels of PCE were reported at MW-11 (29 $\mu g/\ell$) and MW-2 (15 $\mu g/\ell$). Concentrations of PCE in the up-gradient well, MW-13 was 13 $\mu g/\ell$. PCE is the only HVOC detected in the downgradient well MW-6.

Results of the analytical laboratory analysis of the groundwater samples from PW-1 and PW-2, screened in a lower aquifer, indicated HVOC analyte concentrations of 1,1 DCE, TCE, PCE, carbon tetrachloride, and chloroform. Concentrations for both TCE and PCE in each of these wells indicate decreases in concentrations from the previous quarter. Concentrations of TCE and PCE for both PW-1 and PW-2 are provided in **Figure 7**. An isoconcentration map for TCE and PCE is not provided for these wells due to the paucity of data (at least three data points are needed for contouring).

**General Chemistry**

Except for measurements of pH and turbidity, no additional analyses for general chemistry were obtained this quarter. Results for laboratory measured turbidity and pH are provided in **Table 3, Attachment B**. Based on an discussions with you, the RWQCB feels the general chemistry data reported for the previous quarters established sufficient levels of information needed to define the trend. Consequently, there is no need for analyzing samples for general chemistry.

If you have any questions regarding this report please contact either Mr. Dhiru Patel or Mr. Rick Rees at (714) 660-1070.

Very truly yours,

BROWN AND CALDWELL

G. Richard Rees
Project Geologist

Dhiru Patel, P.E.
Project Manager

Attachments (4)

cc: Mr. Nicolas P. Cruz, City of Glendale

P55021
109.0756
MH

# BROWN AND CALDWELL

January 16, 1995

Regional Water Quality Control Board
Los Angeles Region
101 Centre Plaza Drive
Monterey Park, California 91754-2156

51/7418-03

**Attention:** **Ms. Mercedes Hsu**

**Subject:** **CITY OF GLENDALE**
**GRAYSON POWER PLANT**
**GLENDALE, CALIFORNIA 91206**

**RWQCB File # 109.0756**
**SITE QUARTERLY REPORT**
**October 1 - December 31, 1994**

Dear Ms. Hsu:

## BACKGROUND

In response to a letter from the Regional Water Quality Control Board (RWQCB), dated June 3, 1992, the City of Glendale initiated a quarterly groundwater monitoring program at the Grayson Power Plant starting the first quarter of 1993. The site is located near the intersection of the Golden State and the Ventura Freeways at 800 Airway Avenue, Glendale, California. The site is divided into two sections by the Verdugo Wash. The Grayson Power Plant is located north of the wash, with the Los Angeles River along the plant's western border. A phosphate removal plant is located south of the wash (**Figure 1** in **Attachment A**).

As part of the leak detection and tank monitoring program at the site, six groundwater monitoring wells (MW-1 through MW-6) were installed in November 1989 by ENSR Corporation of Camarillo, California. ENSR installed an additional well (MW-7) in March 1990. Two water supply wells were previously installed to provide water for the plant cooling towers. Production well #1 (PW-1) was installed in May 1947 by Barber Bridge Drilling Corporation, Ltd. Production well #2 (PW-2) was installed in June 1959 by Roscoe Moss Company. Currently, the water supply wells are used as a backup to reclaimed water supplied by the Los Angeles-Glendale Reclaimed Water Plant for water used in the cooling towers at the Grayson Power Plant.

Five additional monitoring wells (MW-8 through MW-12) were added to the site in December 1993 by Fugro McClelland, Inc. Four of these monitoring wells were placed within the property boundaries of the Grayson Power Plant and one (MW-8) was located up-gradient of the site.

The groundwater monitoring program has resulted in four quarters of monitoring in 1993 for monitoring wells MW-1 through MW-6 and production wells PW-1 and PW-2. The quarterly monitoring program was expanded to include monitoring wells MW-7 through MW-12 starting the



16735 Von Karman, Suite 200, Irvine, CA 92714-4918
(714) 660-1070 Fax (714) 474-0940

first quarter of 1994. An additional up-gradient monitoring well, MW-13, was installed in May 1994 and has been included in the monitoring program since July 1994.

## PROGRESS THIS PERIOD

During the fourth quarter of 1994, thirteen groundwater monitoring wells (MW-1 through MW-13) and the two site production wells (PW-1 and PW-2) were gauged monthly and sampled once. Gauging took place on October 25, November 16, and December 7, 1994. Groundwater samples were collected from the wells on December 7, 1994. Groundwater elevation data are presented in **Table 1, Attachment B.**

No floating hydrocarbon product was detected in the monitoring wells prior to sampling. Refer to **Attachment C** for groundwater purging and sampling procedures, and copies of the field data and groundwater sample collection logs. The thickness of free phase hydrocarbons in the production wells PW-1 and PW-2 were both 3.0 feet.

Groundwater samples collected from the thirteen monitoring wells and two production wells were analyzed by Brown and Caldwell Analytical (BCA) for halogenated volatile organic compounds (HVOC) using EPA Method 8010. The water quality parameters pH, turbidity, and specific conductance were measured in the field. Copies of the official Analytical Laboratory Reports and Chain-of-Custody Record are included in **Attachment D**, and the laboratory analyses are summarized in **Table 2, Attachment B**.

## PLANNED PROGRESS NEXT QUARTER

Monthly gauging of all groundwater monitoring wells (MW-1 through MW-13), and production wells (PW-1 and PW-2) will continue. Groundwater sampling and reporting will continue on a quarterly basis.

## DISCUSSION AND FINDINGS

### Groundwater Gradient and Flow

Groundwater contour maps, based on the gauging data collected October 22, November 16, and December 7, 1994 are presented in **Figure 2, Figure 3 and Figure 4**, respectively. The groundwater elevation data shown in these figures represent hydrostatic elevations of the first encountered (shallow) aquifer (between 30 and 60 feet below grade) beneath the Grayson Power Plant. The contour map is computer generated (with a contour mapping program by AdCADD™) using a civil engineering program which calculates the distances and differences in head between combinations of three points. Contours are then created based on these calculations, assuming homogeneous and isotropic conditions.

The groundwater flow direction and gradient this quarter were similar to previous quarters. A summary of the results for the three months is as follows.

- The groundwater flow direction in the shallow aquifer in October, as determined by the computer program, varied from the east-southeast to south-southeast with an overall flow direction toward the southeast. The gradient averaged 0.0026 feet per linear foot (ft/ft) during this period.

- In November 1994, the groundwater flow direction ranged from south to south-southeast with an average gradient of 0.0029 ft/ft. The measured water levels in MW-1, MW-2, and MW-5 were approximately 5.5, 1.5 and 5 feet lower, respectively, than previous and subsequent calculated values in December. The discrepancy was probably due to an error in the November field gauging of the wells. The calculated groundwater elevation for monitoring wells MW-1, MW-2, and MW-5 were not included in the contouring data set in November.

- The December flow direction was similar to October's flow direction with an average gradient of 0.0026 ft/ft.

Production wells PW-1 and PW-2 groundwater elevation data were not used in these contour maps due to the fact that the production wells are constructed to draw water from a deeper aquifer (approximately from 135 to 400 feet below grade).

**Dissolved Hydrocarbons**

Results of the analytical laboratory analysis of the groundwater samples, as summarized in **Table 2**, revealed detectable HVOC concentrations in the monitoring wells. The detected compounds included the following: 1,1 dichloroethene (1,1 DCE), 1,2 dichloroethane (1,2 DCA), carbon tetrachloride, chloroform, trichloroethene (TCE), and tetrachloroethene (PCE), 1,1,1-trichloroethane (1,1,1-TCA), 1,1-dichloroethane (1,1-DCA), trans-1,2-dichloroethene (trans 1,2 DCE), cis-1,2 dichloroethene (cis 1,2 DCE), and 1,1,2,2 tetrachloroethane (1,1,2,2 PCA). The analytical results for this quarter indicate 0.99 $\mu g/\ell$ trichlorofluoromethane in monitoring well MW-8 and 24 $\mu g/\ell$ 1,2 dichloropropane in monitoring well MW-2.

TCE and/or the associated PCE are reported in all wells sampled and analyzed this quarter. **Figure 5** shows the isoconcentration map for dissolved TCE in the groundwater at the site based on the analytical results from this quarter. Monitoring well MW-10 indicated the largest increase in HVOCs with TCE increasing from 110 $\mu g/\ell$ last quarter to 960 $\mu g/\ell$ this quarter. Monitoring well MW-10, however, has had the largest fluctuations in the TCE concentrations since December 1994; ranging from 1,700 to 110 $\mu g/\ell$. The up-gradient well MW-8 indicated a consistent increase in the TCE concentrations since the well was first sampled in December 1993. Concentrations ranged from 33 $\mu g/\ell$ to 89 $\mu g/\ell$ in the previous quarters and were reported at 103 $\mu g/\ell$ this quarter. Similar to last quarter, down-gradient wells MW-6 and MW-7 indicated low concentrations of TCE (less than the California maximum contaminant level for drinking water). Monitoring wells MW-4 and MW-5 indicated non-detectable levels of TCE, similar to levels encountered in the first two quarters of 1994.

PCE concentrations are shown on the isoconcentration map presented in **Figure 6**. The PCE concentrations this quarter generally remained consistent from the previous quarter with localized

slight increases. PCE concentrations encountered in monitoring wells MW-3 through MW-9 remained consistent with levels from the previous quarter. Monitoring wells MW-1, MW-2 and MW-10 indicated PCE concentration increases. The highest levels of PCE were reported at MW-11 (20 µg/ℓ) and MW-2 (22 µg/ℓ). The concentration of PCE in the up-gradient monitoring well MW-13 was 10 µg/ℓ. PCE is the only HVOC detected in the down gradient monitoring wells MW-4 and MW-5.

Results of the analytical laboratory analysis of the groundwater samples from PW-1 and PW-2, screened in a lower aquifer, indicated HVOC analyte concentrations of 1,1 DCE, TCE, PCE, carbon tetrachloride, and chloroform. Concentrations of TCE and PCE for both PW-1 and PW-2 are provided in **Figure 7**. Concentrations for both TCE and PCE decreased slightly in PW-1 from the levels reported the previous quarters. PCE concentrations in PW-2 increased slightly from the previous quarter. An isoconcentration map for TCE and PCE is not provided for these wells due to the paucity of data (at least three data points are needed for contouring).

**General Chemistry**

Except for field measurements of pH and turbidity, no additional analyses for general chemistry were obtained this quarter. Results for field measured turbidity and pH are provided in **Table 3, Attachment B**. Based on our discussions with the RWQCB, the general chemistry data reported for the previous quarters established sufficient levels of information needed to define the trend. Consequently, there is no need for analyzing samples for general chemistry.

If you have any questions regarding this report please contact either Mr. Dhiru Patel or Mr. Rick Rees at (714) 660-1070.

Very truly yours,
BROWN AND CALDWELL

G. Richard Rees
Project Geologist

Dhiru Patel

Dhiru Patel, P.E.
Project Manager

Attachments (4)

cc: Mr. Nicolas P. Cruz, City of Glendale

BROWN AND CALDWELL

RECEIVED
96 OCT 31 PM 2:01
CALIFORNIA REGIONAL WATER
QUALITY CONTROL BOARD
LOS ANGELES REGION

October 29, 1996

51/7418-06

Regional Water Quality Control Board
Los Angeles Region
101 Centre Plaza Drive
Monterey Park, California 91754-2156

Attention: Ms. Mercedes Hsu

Subject: City of Glendale
Grayson Power Plant
Glendale, California 91206
RWQCB File # 109.0756
Site Quarterly Report
July 1 - September 30, 1996

Dear Ms. Hsu:

Activities conducted at the Grayson Power Plant during the third quarter of 1996 are discussed below.

## BACKGROUND

In response to a letter from the Regional Water Quality Control Board (RWQCB), dated June 3, 1992, the City of Glendale (City) initiated a quarterly groundwater monitoring program at the Grayson Power Plant (site) starting the first quarter of 1993. The site is located near the intersection of the Golden State and the Ventura Freeways at 634 Bekins Way, Glendale, California. The site is divided into two sections by the Verdugo Wash. The Power Plant is located north of the wash, with the Los Angeles River along the plant's western border as shown in the site plan, **Figure 1 (Attachment A)**.

As part of the leak detection and tank monitoring program at the site, six groundwater monitoring wells (MW-1 through MW-6) were installed in November 1989 by ENSR Corporation of Camarillo, California. ENSR installed an additional well (MW-7) in March 1990. Five additional monitoring wells (MW-8 through MW-12) were added to the site in December 1993 by Fugro McClelland, Inc. Four of these monitoring wells were placed within



Environmental Engineering And Consulting • Analytical Services
16735 VON KARMAN, SUITE 200, IRVINE, CA 92714-4918
(714) 660-1070 FAX (714) 474-0940
Environmental Engineering And Consulting • Analytical Services
16735 VON KARMAN, SUITE 200, IRVINE, CA 92714-4918
(714) 660-1070 FAX (714) 474-0940

the property boundaries of the site and one (MW-8) was located up-gradient of the site. Two water supply wells were previously installed to provide water for the plant cooling towers. Production Well #1 (PW-1) was installed in May 1947 by Barber Bridge Drilling Corporation, Ltd. Production Well #2 (PW-2) was installed in June 1959 by Roscoe Moss Company. Currently, the water supply wells are used as a backup to reclaimed water supplied by the Los Angeles-Glendale Reclaimed Water Plant for use in the cooling towers at the Grayson Power Plant.

The groundwater monitoring program resulted in four quarters of monitoring in 1993 for monitoring wells MW-1 through MW-6 and production wells PW-1 and PW-2. The quarterly monitoring program was expanded to include monitoring wells MW-7 through MW-12 starting the first quarter of 1994. An additional up-gradient monitoring well, MW-13, was installed in May 1994 and has been included in the monitoring program since July 1994.

A soil gas survey and Strataprobe™ groundwater sampling were conducted at the site to delineate the extent and source of the halogenated volatile organic compounds (HVOCs) in groundwater. Brown and Caldwell and Transglobal Environmental Geochemistry (TEG) conducted the work between May and July of 1995. The work was completed per RWQCB recommended guidelines for conducting soil gas surveys. The results of this investigation indicated that the trichloroethene (TCE) plume originates up-gradient or north-northwest of the site and the northern adjacent City properties, (*Soil Vapor Assessment and Groundwater Sampling at the Grayson Power Plant/ Corporate Service Yard*, Brown and Caldwell, 1995).

## PROGRESS THIS PERIOD

During the third quarter of 1996, thirteen groundwater monitoring wells (MW-1 through MW-13) and the two site production wells (PW-1 and PW-2) were gauged monthly and sampled once. Gauging took place on July 17, August 23, and September 10, 1996. Groundwater samples were collected from the wells on September 10 and 11, 1996. Groundwater elevation data are presented in **Table 1, Attachment B.**

Floating hydrocarbon product was not detected in the monitoring wells prior to sampling or during monthly gauging. Refer to **Attachment C** for groundwater purging and sampling procedures, and for copies of the field data and groundwater sample collection logs. Approximately three feet of free phase hydrocarbons were recorded in production well PW-1 during the months of July, August, and September. Production well PW-2 was found to have approximately 0.10 feet of free phase hydrocarbons during the same months.

Groundwater samples collected from the thirteen monitoring wells and two production wells were analyzed by BC Analytical (BCA) for halogenated volatile organic compounds (HVOC)

using EPA Method 8010. The water quality parameters pH, turbidity, temperature, and specific conductance were measured in the field. Copies of the official analytical laboratory reports and chain-of-custody record are included in **Attachment D**. Laboratory analyses for HVOCs are summarized in **Table 2, Attachment B**.

## PLANNED PROGRESS NEXT QUARTER

Monthly gauging and quarterly sampling will continue for all groundwater monitoring wells (MW-1 through MW-13) and production wells (PW-1 and PW-2).

## DISCUSSION AND FINDINGS

### Groundwater Gradient and Flow

Groundwater contour maps, based on the gauging data collected July 17, August 23, and September 10, 1996 are presented in **Figure 2, Figure 3 and Figure 4**, respectively. The groundwater elevation data shown in these figures represent hydrostatic elevations of the first encountered (shallow) aquifer (between 25 and 40 feet below grade) beneath the site. The contour map is computer generated using a civil engineering program (AdCADDÔ) which calculates the distances and differences in head between combinations of three points. Contours are then created based on these calculations, assuming homogeneous and isotropic conditions.

The groundwater flow direction and gradient this quarter were similar to those of previous quarters. A summary of the results for the three months is as follows.

- On July 17, 1996, the groundwater flow direction in the shallow aquifer ranged from the southeast to the south with an overall southerly flow direction. The gradient averaged 0.0032 feet per linear foot (ft/ft) during this period.

- On August 23, 1996, the groundwater flow direction ranged from south-southwest to southeast with an average gradient of 0.0033 ft/ft.

- The September 10, 1996, groundwater flow direction ranged from southeast to south with an overall southerly flow direction. The average gradient was 0.0032 ft/ft.

Production wells PW-1 and PW-2 groundwater elevation data were not used in these contour maps since the production wells are constructed to draw water from a deeper aquifer (approximately from 135 to 400 feet below grade).

**Dissolved Hydrocarbons**

Results of the analytical laboratory analyses of the groundwater samples collected during the third quarter 1996, as summarized in **Table 2**, revealed detectable HVOC concentrations in eleven of the thirteen monitoring wells and both production wells. The detected compounds included the following: 1,1 dichloroethene (1,1 DCE), cis 1,2 dichloroethene (cis 1,2 DCE), 1,1 dichloroethane (1,1 DCA), 1,2 dichloroethane (1,2 DCA), carbon tetrachloride, chloroform, trichloroethene (TCE), tetrachloroethene (PCE), and trichlorofluoromethane (TCFA).

The estimated shape and concentration gradient of the dissolved HVOC plume is similar to the previous quarter (second quarter) report. Interpretation of the dissolved hydrocarbon plume is based on the third quarter results and our understanding of site conditions based on the results of the soil gas survey and Strataprobe™ groundwater sampling conducted in May and July 1995. The Strataprobe™ groundwater sampling indicated that the highest concentrations of TCE were located up-gradient of the Grayson Power Plant and City Maintenance facility. The highest TCE concentrations encountered during groundwater sampling with the Strataprobe™ (3,000 µg/l) were detected at the recycling facility along Flower Street and at the fire department training center, south of Flower Street.

**Figure 5** shows the site isoconcentration map for dissolved TCE in the shallow aquifer and is based on the analytical results from this quarter. As observed in the previous quarter, TCE was not present in wells at the southeast corner of the site (MW-4, MW-5, MW-6, MW-7). The highest concentrations of TCE, ranging from 1,200 to 1,500 µg/l, were encountered in the central and southern portions of the site in the samples collected from wells MW-1, MW-2 and MW-11.

**Figure 6** shows the site isoconcentration map for dissolved PCE in the shallow aquifer based on the analytical results from this quarter. PCE was not present in wells at the southeast corner of the site (MW-5, MW-6, and MW-7) and the southern central portion of the site (MW-10). Concentrations of PCE in all other wells remained at relatively low levels as were observed during previous quarters.

Results of the laboratory analysis of the groundwater samples collected from PW-1 and PW-2, screened in a deeper aquifer, indicates the presence of TCE and PCE. Concentrations of TCE and PCE for both PW-1 and PW-2 are provided in **Figure 7**. Concentrations of PCE have remained relatively the same since groundwater monitoring was initiated in the first quarter of 1993. Concentrations of TCE have generally decreased since June 17, 1993. An isoconcentration map for TCE and PCE is not provided for these wells due to the paucity of data (at least three data points are needed for contouring).

Where detected, the TCE concentrations decreased slightly in most monitoring wells with the exception of well MW-8 that showed a slight increase, and wells MW-2 and MW-13 that

showed no change from the previous quarter. In general, the observed increase in TCE concentrations in groundwater at the site since 1993 and TCE plume geometry support the conclusion that groundwater underneath the Grayson Power Plant originated from off-site sources upgradient of the site.

**General Mineral Chemistry**

Turbidity, pH, and conductivity measurements were collected during well purging. Results of stabilized, field-measured turbidity, conductivity and pH are provided in **Table 3, Attachment B**.

If you have any questions regarding this report please contact Dhiru Patel at (714) 660-1070 or Tracy Berge at (818) 552-5903.

Very truly yours,

BROWN AND CALDWELL

Tracy E. Berge
Project Geologist

Dhiru Patel, P.E.
Project Manager

Attachments (4)

cc: Mr. Nicolas P. Cruz, City of Glendale

BROWN AND CALDWELL

RECEIVED
97 FEB 20 PM 1:57
REGIONAL WATER QUALITY CONTROL BOARD
LOS ANGELES REGION

February 19, 1997

Mr. Eric Nupen
Regional Water Quality Control Board
Los Angeles Region
101 Centre Plaza Drive
Monterey Park, California 91754-2156

42-7418-07

Subject: City of Glendale - Grayson Power Plant
Concurrence with Recommended Modifications
1997 Groundwater Monitoring Program
RWQCB File # 109.0756

Dear Mr. Nupen:

As requested during our telephone conversation on February 6, 1997, this letter is submitted to confirm your concurrence with the proposed modifications to the groundwater monitoring program at the City of Glendale's Grayson Power Plant located at 634 Bekins Way in Glendale, California. As mentioned in our conversation, the initial groundwater monitoring program included monthly gauging of all existing groundwater monitoring wells; quarterly sampling of all groundwater monitoring wells; and, the preparation of quarterly reports summarizing the information collected. We believe the past four years of groundwater monitoring have fully characterized the site. As demonstrated in the report *Soil Vapor Assessment and Groundwater Sampling at the Grayson Power Plant/Corporate Service Yard* (Brown and Caldwell, October 1995), the plume of elevated halogenated volatile organic compounds (HVOCs) likely originates up-gradient or north-northwest of the site and the northern adjacent City properties. Therefore, we propose the following modifications to the groundwater program:

- Gauging of all wells on a quarterly basis instead of the current monthly basis. We have successfully established the groundwater hydrology based on the monthly gauging data for the past four years and there is no continued need for the monthly data.

- Sample and analyze wells MW-1, MW-2, MW-3, MW-10 and MW-11 on a semi-annual basis. These wells have elevated levels of TCE and the semi-annual sampling is expected to provide adequate new information necessary to track the TCE plume in the groundwater. Semi-annual sampling will be conducted in March and September.

e:\jobs\7418\rwqcb.doc
DCN 100962

Environmental Engineering And Consulting • Analytical Services
801 Western Avenue, Glendale, CA 91201-2350
(818) 552-5911 Fax (818) 552-5901

109.0756 F97-0014 ZN.



- Sample and analyze all other wells (MW-4 through MW-9, MW-13, PW-1 and PW-2) on an annual basis. The HVOC concentrations have fluctuated insignificantly based on the past sampling results and we believe annual groundwater sampling will provide adequate data to monitor the groundwater quality beneath the site. Annual sampling will be conducted in September.

- Semi-annual reports summarizing the data collected will be submitted to the RWQCB in July and January.

We discussed the modifications outlined above during our telephone conversation on February 6, 1997, and you indicated that the modified monitoring plan is acceptable to the RWQCB. These changes will be initiated the first quarter of 1997. We thank you for you prompt consideration of our request. If you have any additional questions, please contact me at (818) 552-5903.

Very truly yours,

BROWN AND CALDWELL

Tracy E. Berge

Tracy E. Berge
Project Manager

cc: Mr. Nicholas P. Cruz, City of Glendale
Mr. Dhiru Patel, Patel Engineering Consultants

109.0756 F97-0014 2-N.

BROWN AND
CALDWELL

February 3, 1997

Mr. Eric Nupen
Regional Water Quality Control Board
Los Angeles Region
101 Centre Plaza Drive
Monterey Park, California 91754-2156

42/7418-06

RECEIVED
97 FEB -4 AM 11:32
REGIONAL BOARD
LOS ANGELES REGION

Subject: City of Glendale
Grayson Power Plant
Glendale, California 91206
RWQCB File # 109.0756
Site Quarterly Report
October 1 to December 31, 1996

Dear Mr. Nupen:

Activities conducted at the Grayson Power Plant during the fourth quarter of 1996 are discussed below.

## BACKGROUND

In response to a letter from the Regional Water Quality Control Board (RWQCB), dated June 3, 1992, the City of Glendale (City) initiated a quarterly groundwater monitoring program at the Grayson Power Plant (site) starting the first quarter of 1993. The site is located near the intersection of the Golden State and the Ventura Freeways at 634 Bekins Way, Glendale, California. The site is divided into two sections by the Verdugo Wash. The Power Plant is located north of the wash, with the Los Angeles River along the plant's western border as shown in the site plan, **Figure 1 (Attachment A)**.

As part of the leak detection and tank monitoring program at the site, six groundwater monitoring wells (MW-1 through MW-6) were installed in November 1989 by ENSR Corporation of Camarillo, California. ENSR installed an additional well (MW-7) in March 1990. Five additional monitoring wells (MW-8 through MW-12) were added to the site in December 1993 by Fugro McClelland, Inc. Four of these monitoring wells were placed within the property boundaries of the site and one (MW-8) was located up-gradient of the site. Two water supply wells were previously installed to provide water for the plant cooling towers.



Environmental Engineering And Consulting • Analytical Services
16735 Von Karman, Suite 200, Irvine, CA 92714-4918
(714) 660-1070 Fax (714) 474-0940

Production Well #1 (PW-1) was installed in May 1947 by Barber Bridge Drilling Corporation. Production Well #2 (PW-2) was installed in June 1959 by Roscoe Moss Company. Currently, the water supply wells are used as a backup water source to reclaimed water supplied by the Los Angeles-Glendale Reclaimed Water Plant for use in the cooling towers at the Grayson Power Plant.

The groundwater monitoring program resulted in four quarters of monitoring in 1993 for monitoring wells MW-1 through MW-6 and production wells PW-1 and PW-2. The quarterly monitoring program was expanded to include monitoring wells MW-7 through MW-12 starting the first quarter of 1994. An additional up-gradient monitoring well, MW-13, was installed in May 1994 and has been included in the quarterly groundwater monitoring program since July 1994.

A soil gas survey and Strataprobe™ groundwater sampling were conducted at the site to delineate the extent and source of the halogenated volatile organic compounds (HVOCs) in groundwater. Brown and Caldwell and Transglobal Environmental Geochemistry (TEG) conducted the work between May and July of 1995. The work was initiated in response to the data request by the US Environmental Protection Agency (EPA) and was completed per RWQCB recommended guidelines for conducting soil gas surveys. The results of this investigation indicated that the trichloroethene (TCE) plume originates up-gradient or north-northwest of the site and the northern adjacent City properties, (*Soil Vapor Assessment and Groundwater Sampling at the Grayson Power Plant/ Corporate Service Yard*, Brown and Caldwell, 1995).

## PROGRESS THIS PERIOD

During the fourth quarter of 1996, thirteen groundwater monitoring wells (MW-1 through MW-13) were gauged monthly and sampled once. The two site production wells (PW-1 and PW-2) were gauged in October and November, and sampled in December. Gauging took place on October 31, November 27, and December 16, 1996. Groundwater samples were collected from the wells on December 16 and 17, 1996. Groundwater elevation data are presented in **Table 1, Attachment B.**

Floating hydrocarbon product was not detected in the monitoring wells prior to sampling or during monthly gauging. Refer to **Attachment C** for groundwater purging and sampling procedures, and for copies of the field data and groundwater sample collection logs. Approximately three feet of free phase hydrocarbons were recorded in production well PW-1 during the months of October and November. Production well PW-2 was found to have approximately 0.10 feet of free phase hydrocarbons during the same months.

Groundwater samples collected from the thirteen monitoring wells and two production wells were analyzed by VOC Analytical (VOC) for halogenated volatile organic compounds (HVOC) using EPA Method 8010. The water quality parameters pH, turbidity, temperature, and specific conductance were measured in the field. Copies of the official analytical laboratory reports and chain-of-custody record are included in **Attachment D**. Laboratory analyses for HVOCs are summarized in **Table 2, Attachment B**.

## DISCUSSION AND FINDINGS

This section discusses the data collected during this quarter.

### Groundwater Gradient and Flow

Groundwater contour maps, based on the gauging data collected October 31, November 27, and December 16, 1996 are presented in **Figure 2, Figure 3, and Figure 4**, respectively. The groundwater elevation data shown in these figures represent hydrostatic elevations of the first encountered (shallow) aquifer (between 25 and 40 feet below grade) beneath the site. The contour map is computer generated using a civil engineering program (AdCADD) which calculates the distances and differences in head between combinations of three points. Contours are then created based on these calculations, assuming homogeneous and isotropic conditions.

The groundwater flow direction and gradient this quarter were similar to those calculated during previous quarters. A summary of the results for the October through December is as follows.

- On October 31, 1996, the groundwater flow direction in the shallow aquifer ranged from east-southeast to the southeast with an overall southeasterly flow direction. The gradient averaged 0.0033 feet per linear foot (ft/ft) during this period.

- On November 27, 1996, the groundwater flow direction ranged from east-southeast to south-southeast with an overall southeasterly flow direction . The average gradient was 0.0035 ft/ft.

- The December 16, 1996, groundwater flow direction ranged from east-southeast to south-southeast with an overall southeasterly flow direction. The average gradient was 0.0031 ft/ft.

Production wells PW-1 and PW-2 groundwater elevation data were not used in these contour maps since the production wells are constructed to draw water from a deeper aquifer (approximately from 135 to 400 feet below grade).

**Dissolved Hydrocarbons**

Results of the analytical laboratory analyses of the groundwater samples collected during the fourth quarter 1996, as summarized in **Table 2**, revealed detectable HVOC concentrations in eleven of the thirteen monitoring wells and both production wells. The detected compounds included the following: 1,1 dichloroethene (1,1 DCE), cis 1,2 dichloroethene (cis 1,2 DCE), 1,1 dichloroethane (1,1 DCA), 1,2 dichloroethane (1,2 DCA), carbon tetrachloride, chloroform, trichloroethene (TCE), and tetrachloroethene (PCE).

The estimated shape and concentration gradient of the dissolved HVOC plume is similar to the previous quarter (third quarter) report. Interpretation of the dissolved hydrocarbon plume is based on the fourth quarter results and our understanding of site conditions based on the results of the soil gas survey and Strataprobe™ groundwater sampling conducted in May and July 1995. The Strataprobe™ groundwater sampling indicated that the highest concentrations of TCE were located up-gradient of the Grayson Power Plant and City Maintenance facility. The highest TCE concentrations encountered during groundwater sampling with the Strataprobe™ (3,000 µg/l) were detected at the recycling facility along Flower Street and at the fire department training center, south of Flower Street.

**Figure 5** shows the site isoconcentration map for dissolved TCE in the shallow aquifer and is based on the analytical results from this quarter. As observed in the previous quarter, TCE was not present in wells at the southeast corner of the site (MW-4, MW-5, MW-6, MW-7). The highest concentrations of TCE, ranging from 580 to 2,100 µg/l, were encountered in the central and southern portions of the site in the samples collected from wells MW-1, MW-2, MW-3, and MW-11.

**Figure 6** shows the site isoconcentration map for dissolved PCE in the shallow aquifer based on the analytical results from this quarter. PCE was not present in two of the wells at the southeast corner of the site (MW-5 and MW-7) and the southern central portion of the site (MW-10). Concentrations of PCE in all other wells remained at relatively low levels as were observed during previous quarters.

Results of the laboratory analysis of the groundwater samples collected from PW-1 and PW-2, screened in a deeper aquifer, indicates the presence of TCE and PCE. Concentrations of TCE and PCE for both PW-1 and PW-2 are provided in **Figure 7**. Concentrations of PCE have remained relatively unchanged since groundwater monitoring was initiated in the first quarter of 1993. Concentrations of TCE have generally decreased since June 17, 1993. An isoconcentration map for TCE and PCE is not provided for these wells due to the paucity of data (at least three data points are needed for contouring).

Where detected, the TCE concentrations increased slightly in most monitoring wells with the exception of well MW-1 that showed a decrease. In general, the observed increase in TCE

concentrations in groundwater at the site since 1993 and TCE plume geometry support the conclusion that groundwater underneath the Grayson Power Plant originated from off-site sources upgradient of the site.

Based on the reasonably good understanding of the groundwater plume from the extensive monitoring data in the past, it is suggested that the monitoring program be modified. The City is proposing that the monitoring program be modified as discussed in the next section.

**General Mineral Chemistry**

Turbidity, pH, and conductivity measurements were collected during well purging. Results of stabilized, field-measured turbidity, conductivity and pH are provided in **Table 3, Attachment B**.

## PLANNED PROGRESS NEXT QUARTER

The site monitoring program was initiated in 1993 and continued through 1996 yielding continuous quarterly analytical results for four years. The results of the past gauging and sampling has fully characterized the site and most wells (except for wells MW-1, MW-2, MW-3, MW-10 and MW-11) have achieved low steady state concentrations for HVOCs (**Figure 8** and **Figure 9**). It was also demonstrated that the plume of elevated HVOC concentrations in the groundwater below the site likely originated from off site sources up gradient of the site. As a result, the City proposes a modified monitoring protocol that will provide the data desired by the RWQCB more cost effectively.

The proposed monitoring plan for 1997 is as follows:

- Gauging of all wells on a quarterly basis instead of the current monthly basis. We have successfully established the groundwater hydrology based on the monthly gauging data for the past four years and there is no continued need for the monthly data.

- Sample and analyze wells MW-1, MW-2, MW-3, MW-10 and MW-11 on a semi-annual basis. These wells have elevated levels of TCE and the semi-annual sampling is expected to provide adequate new information necessary to track the TCE plume in the groundwater.

- Sample and analyze all other wells (MW-4 through MW-9, MW-13, PW-1 and PW-2) on an annual basis. The HVOC concentrations have fluctuated

insignificantly based on the past sampling results and the City feels the annual sampling will provide adequate data to monitor the groundwater quality beneath the site.

We request the concurrence of the RWQCB for the proposed modified monitoring plan. After sending this quarterly report, the City will contact the RWQCB to make sure of the approval for the planned modification in the monitoring program.

We look forward to discussing the proposed modifications in the monitoring program in a meeting with the RWQCB. In the meantime, if you have any questions regarding this report please contact Tracy Berge at (818) 552-5903, or Dhiru Patel at (714) 260-6148.

Very truly yours,

BROWN AND CALDWELL

Tracy E. Berge
Project Manager

PATEL ENGINEERING CONSULTANTS

Dhiru Patel, P.E.
Project Manager

Attachments (4)

cc: Mr. Nicolas P. Cruz, City of Glendale

109.0756 F97-0048 EN.

# BROWN AND CALDWELL

RECEIVED
97 MAY 21 PM 1:43
LOS ANGELES REGION

May 19, 1997

Mr. Eric Nupen
Regional Water Quality Control Board
Los Angeles Region
101 Centre Plaza Drive
Monterey Park, California 91754-2156

42/5075-01

Subject: City of Glendale - Grayson Power Plant
634 Bekins Way, Glendale, California
RWQCB File # 109.0756
Site Semi-annual Report
January 1 to March 31, 1997

Dear Mr. Nupen:

Brown and Caldwell is respectfully submitting the first semi-annual monitoring report for the City of Glendale's Grayson Power Plant (Plant). This report summarizes the following:

- site background,
- Regional Water Quality Control Board (RWQCB) approved modifications to the groundwater monitoring program
- activities conducted at the site during the first quarter of 1997
- analytical data collected during the first quarter of 1997

## BACKGROUND

The Plant is located near the intersection of the Golden State (5) and the Ventura (134) Freeways at 634 Bekins Way, Glendale, California. The site is divided into two sections by the Verdugo Wash. The power plant is located north of the wash, with the Los Angeles River along the Plant's western border as shown in the site plan (Figure 1, Attachment A).

As part of the leak detection and tank monitoring program at the site, six groundwater monitoring wells (MW-1 through MW-6) were installed in November 1989 by ENSR Corporation of Camarillo, California. ENSR installed an additional well (MW-7) in March



Environmental Engineering And Consulting • Analytical Services
801 Western Avenue, Glendale, CA 91201-2350
(818) 552-5911 Fax (818) 552-5901

1990. Five additional monitoring wells (MW-8 through MW-12) were added to the site in December 1993 by Fugro McClelland, Inc. Four of these monitoring wells were placed within the property boundaries of the site and one (MW-8) was located up-gradient of the site.

Two water supply wells have been installed to provide water for the plant cooling towers. Production Well #1 (PW-1) was installed in May 1947 by Barber Bridge Drilling Corporation. Production Well #2 (PW-2) was installed in June 1959 by Roscoe Moss Company. Currently, the water supply wells are used only as a backup water source for the cooling towers at the Plant. The primary water source is now reclaimed water supplied by the Los Angeles-Glendale Reclaimed Water Plant.

In response to a June 3, 1992 letter from the RWQCB, the City of Glendale initiated a groundwater monitoring program at the Plant in the first quarter of 1993. The groundwater monitoring program resulted in four quarters of monitoring in 1993 for monitoring wells MW-1 through MW-6 and production wells PW-1 and PW-2. The quarterly monitoring program was expanded to include monitoring wells MW-7 through MW-12 starting the first quarter of 1994. An additional up-gradient monitoring well, MW-13, was installed in May 1994 and has been included in the quarterly groundwater monitoring program since July 1994.

A soil gas survey and Strataprobe™ groundwater sampling were conducted at the site to delineate the extent and source of the halogenated volatile organic compounds (HVOCs) in groundwater. Brown and Caldwell and Transglobal Environmental Geochemistry (TEG) conducted the work between May and July of 1995. The work was initiated in response to the data request by the US Environmental Protection Agency (EPA) and was completed per RWQCB recommended guidelines for conducting soil gas surveys. The results of this investigation indicated that the trichloroethene (TCE) plume originates up-gradient of the City of Glendale's property which includes the Plant, maintenance yard, fire department, and recycling facility (*Soil Vapor Assessment and Groundwater Sampling at the Grayson Power Plant/Corporate Service Yard*, Brown and Caldwell, 1995).

## MONITORING PROGRAM MODIFICATIONS

As recommended in the February 3, 1997 Site Quarterly Report for the fourth quarter of 1996, and approved in the February 6, 1997 letter to the RWQCB, the following modifications have been made to the groundwater monitoring program:

- All wells will be gauged on a quarterly basis instead of monthly as was performed during previous monitoring programs. The wells were gauged monthly during the first quarter of 1997 prior to the RWQCB's agreement to the proposed modifications. Quarterly gauging

will be conducted in March, June, September and December. Quarterly gauging of all wells will begin in June 1997.

- Wells MW-1, MW-2, MW-3, MW-10 and MW-11 will be sampled and analyzed semi-annually. These wells have elevated levels of TCE and semi-annual sampling should provide adequate information necessary to track the TCE plume in the groundwater. Semi-annual sampling will be conducted in March and September. The first round of semi-annual groundwater sampling was conducted on March 11, 1997. The next round of semi-annual groundwater sampling has been scheduled for September 23, 1997.

- Wells MW-4 through MW-9, MW-13, PW-1 and PW-2 will be sampled and analyzed annually. The HVOC concentrations have fluctuated insignificantly based on the past sampling results and annual groundwater sampling should provide adequate data to monitor the groundwater quality beneath the site. Annual sampling is scheduled for September 22, 1997.

- Semi-annual reports summarizing the site data will be submitted to the RWQCB during the second and fourth quarters.

## ACTIVITIES PERFORMED THIS PERIOD

During the first quarter of 1997, thirteen groundwater monitoring wells (MW-1 through MW-13) and the two site production wells (PW-1 and PW-2) were gauged monthly. Gauging took place on January 3, February 12, and March 11, 1997. Groundwater elevation data are presented in Table 1 (Attachment B).

Semi-annual groundwater sampling was conducted on March 11, 1997. Groundwater samples were scheduled to be collected from five wells (MW-1, MW-2, MW-3, MW-10, and MW-11). However, due to construction activities at the site, Well MW-1 was inaccessible and was not sampled.

Each well was purged prior to sampling. Turbidity, pH, and conductivity measurements were collected during well purging. Results of stabilized, field-measured turbidity, conductivity and pH are provided in Table 2 (Attachment B). Groundwater purging and sampling procedures and copies of the field data and groundwater sample collection logs are presented in Attachment C. Groundwater samples collected from monitoring wells MW-2, MW-3, MW-10, and MW-11 were analyzed by VOC Analytical Laboratories, in Glendale, California, for halogenated volatile organic compounds (HVOC) using EPA Method 8010. Copies of the analytical laboratory reports and chain-of-custody record are included in Attachment D. Laboratory analyses for HVOCs are summarized in Table 2 (Attachment B).

## DISCUSSION AND FINDINGS

The following sections summarize the results of the gauging and semi-annual groundwater sampling activities conducted during the first quarter of 1997.

### Groundwater Gradient and Flow Direction

Groundwater contour maps, based on the gauging data collected January 3, February 12, and March 11, 1997, are presented in Figure 2, Figure 3, and Figure 4 (Attachment A), respectively. The groundwater elevation data shown in these figures represent hydrostatic elevations of the first encountered (shallow) aquifer (located between 25 and 40 feet below grade) beneath the site. The contour map is computer generated using a civil engineering program (AdCADD) which calculates the distances and differences in head between combinations of three points. Contours are then created based on these calculations, assuming homogeneous and isotropic conditions.

The groundwater flow directions and gradients determined this quarter were similar to those determined during previous quarters. A summary of the results for the January through March is presented below.

- On January 3, 1997, the groundwater flow direction in the shallow aquifer ranged from east-southeast to the southeast with an overall southeasterly flow direction. The gradient averaged 0.003 feet per linear foot (ft/ft) during this period.

- On February 12, 1997, the groundwater flow direction ranged from east-southeast to south-southeast with an overall southeasterly flow direction. The average gradient was 0.003 ft/ft.

- The March 11, 1997, groundwater flow direction ranged from east-southeast to south-southeast with an overall southeasterly flow direction. The average gradient was 0.003 ft/ft.

Production wells PW-1 and PW-2 groundwater elevation data were not used in these contour maps since the production wells are constructed to draw water from a deeper aquifer (located approximately from 135 to 400 feet below grade).

**Separate Phase Liquid Hydrocarbons**

Since the inception of groundwater monitoring program, oil from pump lubrication was found floating in the production wells. Approximately 3 feet of lubrication oil was detected in production well PW-1 during the months of January, February and March. This is consistent with the historical data collected from this well. Production well PW-2 was found to have approximately 0.10 feet of lubrication oil during January and February. Approximately 3 feet of lubrication oil was measured in Well PW-2 in March. This increase in hydrocarbon thickness is consistent with the historical data collected from Well PW-2. The lubrication oil detected in the production wells is floating on the surface of the groundwater and is not in contact with the well screen. Separate phase liquid hydrocarbons were not detected in the monitoring wells prior to sampling or during monthly gauging.

**Dissolved Halogenated Volatile Organic Compounds**

Results of the analyses of the semi-annual groundwater samples, as summarized in Table 3 (Attachment B) revealed detectable HVOC concentrations in the four groundwater monitoring wells sampled. The compounds detected include: 1,1 dichloroethene (1,1 DCE), cis 1,2 dichloroethene (cis 1,2 DCE), 1,1 dichloroethane (1,1 DCA), carbon tetrachloride, chloroform, trichloroethene (TCE), and tetrachloroethene (PCE).

The estimated shape and concentration gradient of the dissolved HVOC plume appears to be similar to the isoconcentration map prepared using the data collected during the previous quarter (fourth quarter, 1996). Interpretation of the dissolved hydrocarbon plume is based on the first quarter analytical results and our understanding of site conditions (potential paleochannel) based on the results of the soil gas survey and Strataprobe™ groundwater sampling conducted in May and July 1995. The Strataprobe™ groundwater sampling indicated that the highest concentrations of TCE were located up-gradient of the Grayson Power Plant and City Maintenance facility. The highest TCE concentrations encountered during groundwater sampling with the Strataprobe™ (3,000 µg/l) were detected at the recycling facility along Flower Street and at the fire department training center, south of Flower Street.

With the exception of Well MW-3, the TCE concentrations detected in the groundwater samples collected during the semi-annual sampling have decreased slightly. In general, the TCE concentrations detected in the groundwater samples collected in March are consistent with historical data.

Concentrations of TCE, ranging from 430 µg/l to 2,000 µg/l, were encountered in the samples collected from wells MW-2, MW-3, MW-10, and MW-11. The site isoconcentration map for dissolved TCE in the shallow aquifer based on the semi-annual groundwater analytical results is shown on Figure 5 (Attachment A).

Concentrations of PCE in the other wells sampled (Wells MW-2, MW-3, MW-11) remained at relatively low levels (ranging from 14 µg/l to 19 µg/l) as has been observed during previous sampling events. The site isoconcentration map for dissolved PCE in the shallow aquifer based on the semi-annual groundwater analytical results is presented in Figure 6. PCE was not present in one of the wells sampled (MW-10).

If you have any questions regarding the information contained in this report, please contact Tracy Berge at (818) 552-5903.

Very truly yours,

BROWN AND CALDWELL

Tracy E. Berge
Project Manager

Mikkel R. Anderson, P.E.
Principal-in-Charge

Attachments (4)

cc: Mr. Nicolas P. Cruz, City of Glendale

Corporation of Camarillo, California. ENSR installed an additional well (MW-7) in March 1990. Fugro McClelland, Inc. added five additional monitoring wells (MW-8 through MW-12) to the site in December 1993. Four of these monitoring wells were placed within the property boundaries of the site and one (MW-8) was located up-gradient of the site.

Two water supply wells have been installed to provide water for the plant cooling towers. Production Well #1 (PW-1) was installed in May 1947 by Barber Bridge Drilling Corporation. Roscoe Moss Company installed Production Well #2 (PW-2) in June 1959. Currently, the water supply wells are used only as a backup water source for the cooling towers at the Grayson Power Plant. The primary water source is reclaimed water supplied by the Los Angeles-Glendale Reclaimed Water Plant.

In response to a June 3, 1992 letter from the RWQCB, the City of Glendale initiated a groundwater monitoring program at the Plant in the first quarter of 1993. The groundwater monitoring program resulted in four quarters of monitoring in 1993 for monitoring wells MW-1 through MW-6 and production wells PW-1 and PW-2. The quarterly monitoring program was expanded to include monitoring wells MW-7 through MW-12 starting the first quarter of 1994. An additional up-gradient monitoring well, MW-13, was installed in May 1994 and has been included in the quarterly groundwater monitoring program since July 1994.

A soil gas survey and Strataprobe™ groundwater sampling were conducted at the site to delineate the extent and source of the halogenated volatile organic compounds (HVOCs) in groundwater. Brown and Caldwell and Transglobal Environmental Geochemistry (TEG) conducted the work between May and July of 1995. The work was initiated in response to the data request by the US Environmental Protection Agency (EPA) and was completed according to RWQCB recommended guidelines for conducting soil gas surveys. The results of this investigation indicated that the trichloroethene (TCE) plume originates up-gradient of the City of Glendale property which includes the Grayson Power Plant, maintenance yard, fire department, and recycling facility (*Soil Vapor Assessment and Groundwater Sampling at the Grayson Power Plant/Corporate Service Yard*, Brown and Caldwell, 1995).

## GROUNDWATER MONITORING PROGRAM DESCRIPTION

As recommended in the February 3, 1997 Site Quarterly Report for the fourth quarter of 1996, approved verbally by Mr. Eric Nupen, and confirmed in the February 6, 1997 letter to the RWQCB, modifications have been made to the groundwater monitoring program. The current groundwater monitoring program includes the following:

- All wells are gauged on a quarterly basis instead of monthly as was performed prior to 1997. Quarterly gauging was conducted in March, June, and September and December. The gauging data collected in December will be included in the July 1998 semi-annual report.

- Wells MW-1, MW-2, MW-3, MW-10 and MW-11 are sampled and analyzed semi-annually. These wells have historically had elevated levels of TCE and semi-annual sampling provides adequate information necessary to track the TCE plume in the groundwater. Semi-annual sampling is conducted in March and September.

- Wells MW-4 through MW-9, MW-13, PW-1 and PW-2 are sampled and analyzed annually. HVOC concentrations have fluctuated very little in these wells based on the past sampling results; consequently, annual groundwater sampling should provided adequate data to monitor the groundwater quality beneath the site.

- Semi-annual reports summarizing the site data are submitted to the RWQCB during the second and fourth quarters.

## ACTIVITIES PERFORMED THIS PERIOD

The thirteen groundwater monitoring wells (MW-1 through MW-13) were gauged twice during this reporting period. Gauging took place on June 24 and September 15, 1997. The onsite production wells were gauged on October 23, 1997 as a supplemental event to the September gauging. Groundwater elevation data are presented in **Table 1 (Attachment B)**.

Semi-annual and annual groundwater sampling was conducted on September 15 and 16, 1997. Groundwater samples were collected from all thirteen monitoring wells and the two production wells. Additional groundwater samples were collected on November 11 and 12, 1997 to confirm the results of the September sampling event. Laboratory analyses for HVOCs are summarized in **Table 2 (Attachment B)**.

Each well was purged prior to sampling. Turbidity, pH, and conductivity measurements were collected during well purging. Results of stabilized, field-measured turbidity, conductivity and pH are provided in **Table 3 (Attachment B)**. Groundwater purging and sampling procedures and copies of the field data and groundwater sample collection logs are presented in **Attachment C**. Groundwater samples collected from the monitoring wells were analyzed by VOC Analytical Laboratories, in Glendale, California, for HVOCs using EPA Method 8010. Copies of the analytical laboratory reports and chain-of-custody record are included in **Attachment D**.

On October 24, 1997, Mr. Walter Salas of the RWQCB met with Mr. Nick Cruz of the City of Glendale and Ms. Tracy Berge of Brown and Caldwell. Mr. Salas toured the plant and inspected the plant and yard facilities and the groundwater monitoring wells. On October 27, 1997, a copy of the report *Soil Vapor Assessment and Groundwater Sampling at the Grayson Power Plant/Corporate Service Yard,* prepared by Brown and Caldwell, was provided for his review.

## DISCUSSION AND FINDINGS

The following sections summarize the results of the gauging and semi-annual groundwater sampling activities conducted during the second and third quarter of 1997.

### Groundwater Gradient and Flow Direction

Groundwater contour maps, based on the gauging data collected June 24 and September 15, 1997, are presented in **Figure 2** and **Figure 3** (**Attachment A**), respectively. The groundwater elevation data shown in these figures represent hydrostatic elevations of the first encountered (shallow) aquifer (located between 25 and 40 feet below grade) beneath the site. The contour map is computer generated using a civil engineering program (Softdesk) which calculates the distances and differences in head between combinations of three points. Contours are then created based on these calculations, assuming homogeneous and isotropic conditions. Production wells PW-1 and PW-2 groundwater elevation data were not used in preparation of the contour maps since the production wells are constructed to draw water from a deeper aquifer (located approximately from 135 to 400 feet below grade).

The groundwater flow directions and gradients determined these two quarters were similar to those determined during previous quarters. A summary of the results for the second and third quarters is presented below.

- On June 24, 1997, the groundwater flow direction in the shallow aquifer ranged from east-northeast to the southeast with an overall southeasterly flow direction. A leveling effect and a small depression in the groundwater hydrostatic surface was observed in the southern half of the site, north of the Verdugo Wash. The gradient averaged approximately 0.005 feet per linear foot (ft/ft) during this period.

- On September 15, 1997, the groundwater flow direction ranged from east-southeast to south-southeast with an overall southeasterly flow direction. The leveling effect and small depression in the groundwater hydrostatic surface that was observed during the June gauging event was again present in the southern half of the site, north of the Verdugo Wash. The average gradient was approximately 0.005 ft/ft.

**Separate Phase Liquid Hydrocarbons**

Since the inception of the groundwater monitoring program, hydrocarbons believed to be from pump lubrication was found floating in the production wells. Approximately 3.5 feet of lubrication oil was detected in production well PW-1 during September 1997. This is consistent with the historical data collected from this well. Production well PW-2 was found to have approximately 0.02 feet of hydrocarbons during September. This hydrocarbon thickness is slightly less than levels measured historically from Well PW-2. The hydrocarbons detected in the production wells is floating on the surface of the groundwater and is not in contact with the well screen. Separate phase liquid hydrocarbons were not detected in the monitoring wells during quarterly gauging or prior to sampling.

**Dissolved Halogenated Volatile Organic Compounds**

Results of the analyses of the groundwater samples obtained in September 1997, as summarized in Table 3 (Attachment B), revealed detectable HVOC concentrations in eleven of the thirteen groundwater monitoring wells sampled. HVOC concentrations were not detected in wells MW-5 and MW-7. The compounds detected include 1,1 dichloroethene (1,1 DCE), cis 1,2 dichloroethene (cis 1,2 DCE), carbon tetrachloride, chloroform, trichloroethene (TCE), and tetrachloroethene (PCE).

The estimated shape and concentration gradient of the dissolved HVOC plume appears to be similar to the isoconcentration map prepared using the data collected during the previous sampling event where all wells were sampled (fourth quarter, 1996). Interpretation of the dissolved hydrocarbon plume is based on the semi-annual and annual groundwater sample analytical results and our understanding of site conditions (potential paleochannel) based on the results of the soil gas survey and Strataprobe™ groundwater sampling conducted in May and July 1995. The Strataprobe™ groundwater sampling indicated that the highest concentrations of TCE were located up-gradient of the Grayson Power Plant and City Maintenance facility. The highest TCE concentrations encountered during groundwater sampling with the Strataprobe™ (3,000 µg/l) were detected at the recycling facility along Flower Street and at the fire department training center, south of Flower Street.

TCE concentrations from groundwater samples collected during the semi-annual and annual sampling have increased slightly in most wells. A slight decrease in TCE concentrations was observed in the samples obtained from MW-13 and the two production wells (PW-1 and PW-2). The TCE concentrations detected in the groundwater samples collected in September indicated TCE concentrations that were higher than those detected historically in wells MW-1, MW-2, MW-3, and MW-9. All monitoring and production wells were resampled on November 11 and 12, 1997 to validate the September 1997 analytical results. The results of the November

sampling event were consistent with the data collected in September. The results of both sampling events are presented in Table 3.

Concentrations of TCE, ranging from 110 µg/l to 2,700 µg/l, were encountered in the samples collected from wells MW-1, MW-2, MW-3, MW-8, MW-9, MW-10, MW-11, MW-12, and MW-13 during September and November 1997. The site isoconcentration map for dissolved TCE in the shallow aquifer based on the annual groundwater analytical results from September 1997 is shown on Figure 5 (Attachment A).

Concentrations of PCE in the wells sampled remained at relatively low levels (ranging from 0.56 µg/l to 30 µg/l) as has been observed during previous sampling events. The site isoconcentration map for dissolved PCE in the shallow aquifer based on the semi-annual and annual groundwater sample analytical results is presented in Figure 6. PCE was not detected in groundwater wells MW-1, MW-3, MW-5, MW-7, and MW-10.

If you have any questions regarding the information contained in this report, please contact Tracy Berge at (818) 552-5903.

Very truly yours,

BROWN AND CALDWELL

Tracy E. Berge
Project Manager

Alison Y. Brown
Principal-in-Charge

Attachments (4)

cc: Mr. Nicolas P. Cruz, City of Glendale



A

B

C

BROWN AND
CALDWELL

RECEIVED
96 JUL 26 AM 11:44
REGIONAL WATER QUALITY CONTROL BOARD
LOS ANGELES REGION

July 25, 1996

Regional Water Quality Control Board
Los Angeles Region
101 Centre Plaza Drive
Monterey Park, California 91754-2156

51/7418-06

Attention: Ms. Mercedes Hsu

Subject: CITY OF GLENDALE
GRAYSON POWER PLANT
GLENDALE, CALIFORNIA 91206

RWQCB File # 109.0756
SITE QUARTERLY REPORT
April 1 - June 30, 1996

Dear Ms. Hsu:

Activities conducted at the subject site during the second quarter of 1996 are discussed below.

## BACKGROUND

In response to a letter from the Regional Water Quality Control Board (RWQCB), dated June 3, 1992, the City of Glendale (City) initiated a quarterly groundwater monitoring program at the Grayson Power Plant starting the first quarter of 1993. The site is located near the intersection of the Golden State and the Ventura Freeways at 634 Bekins Way, Glendale, California. The site is divided into two sections by the Verdugo Wash. The Grayson Power Plant is located north of the wash, with the Los Angeles River along the plant's western border as shown in the site plan, **Figure 1** (**Attachment A**).

As part of the leak detection and tank monitoring program at the site, six groundwater monitoring wells (MW-1 through MW-6) were installed in November 1989 by ENSR Corporation of Camarillo, California. ENSR installed an additional well (MW-7) in March 1990. Five additional monitoring wells (MW-8 through MW-12) were added to the site in December 1993 by Fugro McClelland, Inc. Four of these monitoring wells were placed within the property boundaries of the



Environmental Engineering And Consulting • Analytical Services
16735 Von Karman, Suite 200, Irvine, CA 92714-4918
(714) 660-1070 Fax (714) 474-0940

Grayson Power Plant and one (MW-8) was located up-gradient of the site. Two water supply wells were previously installed to provide water for the plant cooling towers. Production well #1 (PW-1) was installed in May 1947 by Barber Bridge Drilling Corporation, Ltd. Production well #2 (PW-2) was installed in June 1959 by Roscoe Moss Company. Currently, the water supply wells are used as a backup to reclaimed water supplied by the Los Angeles-Glendale Reclaimed Water Plant for water used in the cooling towers at the Grayson Power Plant.

The groundwater monitoring program has resulted in four quarters of monitoring in 1993 for monitoring wells MW-1 through MW-6 and production wells PW-1 and PW-2. The quarterly monitoring program was expanded to include monitoring wells MW-7 through MW-12 starting the first quarter of 1994. An additional up-gradient monitoring well, MW-13, was installed in May 1994 and has been included in the monitoring program since July 1994.

A soil gas survey and Strataprobe™ groundwater sampling were conducted at the site to delineate the extent and source of the halogenated volatile organic compounds (HVOCs) in groundwater. Brown and Caldwell and Transglobal Environmental Geochemistry (TEG) conducted the work between May and July of 1995. The work was completed per RWQCB recommended guidelines for conducting soil gas surveys. The results of this investigation indicated that the trichloroethene (TCE) plume originates up-gradient or north-northwest of the Grayson Power Plant and the northern adjacent City properties, (*Soil Vapor Assessment and Groundwater Sampling at the Grayson Power Plant/ Corporate Service Yard*, Brown and Caldwell, 1995).

## PROGRESS THIS PERIOD

During the second quarter of 1996, thirteen groundwater monitoring wells (MW-1 through MW-13) and the two site production wells (PW-1 and PW-2) were gauged monthly and sampled once. Gauging took place on April 17, May 19, and June 17, 1996. Groundwater samples were collected from the wells on June 17 and 18, 1996. Groundwater elevation data are presented in **Table 1, Attachment B.**

Floating hydrocarbon product was not detected in the monitoring wells prior to sampling or during monthly gauging. Refer to **Attachment C** for groundwater purging and sampling procedures, and for copies of the field data and groundwater sample collection logs. Approximately three feet of free phase hydrocarbons were recorded in production wells PW-1 and PW-2 during the months of May and June.

Groundwater samples collected from the thirteen monitoring wells and two production wells were analyzed by BC Analytical (BCA) for halogenated volatile organic compounds (HVOC) using EPA Method 8010. The water quality parameters pH, turbidity, temperature, and specific conductance were measured in the field. In addition to the HVOC analyses, groundwater samples collected from wells MW-4, MW-5, and MW-6 were also analyzed for Target Analyte List (TAL)

metals by EPA 6,000 and 7,000 series methods and for chromium VI by EPA method 218.4. These analyses were conducted for verification of samples collected by a subcontractor for $CH_2M$ Hill, under contract with the EPA. Copies of the official analytical laboratory reports and chain-of-custody record are included in **Attachment D**. Laboratory analyses for HVOCs are summarized in **Table 2, Attachment B**.

## PLANNED PROGRESS NEXT QUARTER

Monthly gauging and quarterly sampling will continue for all groundwater monitoring wells (MW-1 through MW-13) and production wells (PW-1 and PW-2).

## DISCUSSION AND FINDINGS

### Groundwater Gradient and Flow

Groundwater contour maps, based on the gauging data collected April 17, May 19, and June 17, 1996 are presented in **Figure 2, Figure 3 and Figure 4**, respectively. The groundwater elevation data shown in these figures represent hydrostatic elevations of the first encountered (shallow) aquifer (between 25 and 40 feet below grade) beneath the Grayson Power Plant. The contour map is computer generated using a civil engineering program (AdCADD™) which calculates the distances and differences in head between combinations of three points. Contours are then created based on these calculations, assuming homogeneous and isotropic conditions.

The groundwater flow direction and gradient this quarter were similar to those of previous quarters. A summary of the results for the three months is as follows.

- The groundwater flow direction in the shallow aquifer on April 17, 1996 varied from the southeast to the south with an overall southerly flow direction. The gradient averaged 0.0038 feet per linear foot (ft/ft) during this period.

- On May 19, 1996, the groundwater flow direction ranged from south-southwest to southeast with an average gradient of 0.0049 ft/ft.

- The June 17, 1996, groundwater flow direction ranged from southeast to south with an overall southerly flow direction. The average gradient was 0.0041 ft/ft.

Production wells PW-1 and PW-2 groundwater elevation data were not used in these contour maps due to the fact that the production wells are constructed to draw water from a deeper aquifer (approximately from 135 to 400 feet below grade).

**Dissolved Hydrocarbons**

Results of the analytical laboratory analyses of the groundwater samples collected during the second quarter 1996, as summarized in **Table 2**, revealed detectable HVOC concentrations in eleven of the thirteen monitoring wells and both production wells. The detected compounds included the following: 1,1 dichloroethene (1,1 DCE), cis 1,2 dichloroethene (cis 1,2 DCE), 1,1 dichloroethane (1,1 DCA), 1,2 dichloroethane (1,2 DCA), carbon tetrachloride, chloroform, trichloroethene (TCE), tetrachloroethene (PCE), and trichlorofluoromethane (TCFA).

The estimated shape and concentration gradient of the dissolved HVOC plume is similar to the previous quarter (first quarter) report. Interpretation of the dissolved hydrocarbon plume is based on the second quarter results and our understanding of site conditions based on the results of the soil gas survey and Strataprobe™ groundwater sampling conducted in May and July 1995. The Strataprobe™ groundwater sampling indicated that the highest concentrations of TCE were located up-gradient of the Grayson Power Plant and City Maintenance facility. The highest TCE concentrations encountered during groundwater sampling with the Strataprobe™ (3,000 µg/l) were detected at the recycling facility along Flower Street and at the fire department training center, south of Flower Street.

**Figure 5** shows the site isoconcentration map for dissolved TCE in the shallow aquifer and is based on the analytical results from this quarter. As observed in the previous quarter, TCE was not present in wells at the southeast corner of the site (MW-4, MW-5, MW-6, MW-7). The highest concentrations of TCE, ranging from 1,300 to 1,500 µg/l, were encountered in the central and southern portions of the site at wells MW-1, MW-2 and MW-11.

**Figure 6** shows the site isoconcentration map for dissolved PCE in the shallow aquifer based on the analytical results from this quarter. PCE was not present in wells at the southeast corner of the site (MW-5, MW-6, and MW-7) and the southern central portion of the site (MW-10). Concentrations of PCE in all other wells remained at the same relatively low levels as with previous quarters.

Results of the analytical laboratory analysis of the groundwater samples from PW-1 and PW-2, screened in a lower aquifer, indicates the presence of TCE and PCE. Concentrations of TCE and PCE for both PW-1 and PW-2 are provided in **Figure 7**. Concentrations of PCE have remained relatively the same since groundwater monitoring was initiated in the first quarter of 1993. Concentrations of TCE have generally decreased since June 17, 1993. This quarter results show a increase from last quarter for TCE wells PW-1 and PW-2. An isoconcentration map for TCE and

PCE is not provided for these wells due to the paucity of data (at least three data points are needed for contouring).

Where detected, the TCE concentrations increased in all monitoring wells with the exception of wells MW-11 and MW-13 that showed a slight decrease. The TCE concentration increased the most between the two quarters in well MW-1, increasing from 550 µg/l during the first quarter of 1996 to 1,400 µg/l during the second quarter of 1996. This TCE concentration in well MW-1 is consistent with the values recorded prior to the first quarter 1996. In general, the observed increase in TCE concentrations in groundwater at the site since 1993 and TCE plume geometry support the conclusion that groundwater underneath the Grayson Power Plant originated from off-site sources upgradient of the site.

**General Mineral Chemistry**

Turbidity, pH, and conductivity measurements were collected during well purging. Results of stabilized field-measured turbidity, conductivity and pH are provided in **Table 3, Attachment B**. The results for TAL metals analyses indicate the presence of calcium, magnesium, potassium, sodium, magnesium, iron, and zinc at concentrations typical of background concentrations for these metals in groundwater. No other metals were detected. The analytical results for TAL metals analyses are provided in the laboratory reports in **Attachment D**.

If you have any questions regarding this report please contact either of us at (714) 660-1070.

Very truly yours,

BROWN AND CALDWELL

G. Richard Rees
Project Geologist

Dhiru Patel, P.E.
Project Manager

Attachments (4)

cc: Mr. Nicolas P. Cruz, City of Glendale

BROWN AND
CALDWELL

April 30, 1996

Regional Water Quality Control Board
Los Angeles Region
101 Centre Plaza Drive
Monterey Park, California 91754-2156

51/7418-06

Attention: Ms. Mercedes Hsu

Subject: CITY OF GLENDALE
GRAYSON POWER PLANT
GLENDALE, CALIFORNIA 91206

RWQCB File # 109.0756
SITE QUARTERLY REPORT
January 1 - March 31, 1996

Dear Ms. Hsu:

Activities conducted at the subject site during the first quarter of 1996 are discussed below.

## BACKGROUND

In response to a letter from the Regional Water Quality Control Board (RWQCB), dated June 3, 1992, the City of Glendale (City) initiated a quarterly groundwater monitoring program at the Grayson Power Plant starting the first quarter of 1993. The site is located near the intersection of the Golden State and the Ventura Freeways at 634 Bekins Way, Glendale, California. The site is divided into two sections by the Verdugo Wash. The Grayson Power Plant is located north of the wash, with the Los Angeles River along the plant's western border as shown in the site plan, **Figure 1** (**Attachment A**).

As part of the leak detection and tank monitoring program at the site, six groundwater monitoring wells (MW-1 through MW-6) were installed in November 1989 by ENSR Corporation of Camarillo, California. ENSR installed an additional well (MW-7) in March 1990. Five additional monitoring wells (MW-8 through MW-12) were added to the site in December 1993 by Fugro McClelland, Inc. Four of these monitoring wells were placed within the property boundaries of the


Environmental Engineering And Consulting • Analytical Services
150 South Arroyo Parkway, P.O. Box 7103, Pasadena, CA 91109-7203
(818) 577-1020 Fax (818) 795-6016

Grayson Power Plant and one (MW-8) was located up-gradient of the site. Two water supply wells were previously installed to provide water for the plant cooling towers. Production well #1 (PW-1) was installed in May 1947 by Barber Bridge Drilling Corporation, Ltd. Production well #2 (PW-2) was installed in June 1959 by Roscoe Moss Company. Currently, the water supply wells are used as a backup to reclaimed water supplied by the Los Angeles-Glendale Reclaimed Water Plant for water used in the cooling towers at the Grayson Power Plant.

The groundwater monitoring program has resulted in four quarters of monitoring in 1993 for monitoring wells MW-1 through MW-6 and production wells PW-1 and PW-2. The quarterly monitoring program was expanded to include monitoring wells MW-7 through MW-12 starting the first quarter of 1994. An additional up-gradient monitoring well, MW-13, was installed in May 1994 and has been included in the monitoring program since July 1994.

A soil gas survey and Strataprobe™ groundwater sampling were conducted at the site to delineate the extent and source of the halogenated volatile organic compounds (HVOCs) in groundwater. Brown and Caldwell and Transglobal Environmental Geochemistry (TEG) conducted the work between May and July of 1995. The work was completed per RWQCB recommended guidelines for conducting soil gas surveys. The results of this investigation indicated that the trichloroethene (TCE) plume originates up-gradient or north-northwest of the Grayson Power Plant and the northern adjacent City properties, (*Soil Vapor Assessment and Groundwater Sampling at the Grayson Power Plant/ Corporate Service Yard*, Brown and Caldwell, 1995).

## PROGRESS THIS PERIOD

During the first quarter of 1996, thirteen groundwater monitoring wells (MW-1 through MW-13) and the two site production wells (PW-1 and PW-2) were gauged monthly and sampled once. Gauging took place on January 12, February 21, and March 21, 1996. Groundwater samples were collected from the wells on March 21 and 22, 1996. Groundwater elevation data are presented in **Table 1, Attachment B.**

Floating hydrocarbon product was not detected in the monitoring wells prior to sampling or during monthly gauging. Refer to **Attachment C** for groundwater purging and sampling procedures, and for copies of the field data and groundwater sample collection logs. The thickness of free phase hydrocarbons recorded during the February gauging in the production wells PW-1 and PW-2 were considerably lower than previous monthly measurements. Both PW-1 and PW-2 were found to contain 1.0 foot of free phase hydrocarbons on February 12, 1996. Please note that only PW-2 was gauged in January due to faulty equipment and neither of the production wells were gauged in March. Regular monthly gauging will resume next quarter.

Groundwater samples collected from the thirteen monitoring wells and two production wells were analyzed by Brown and Caldwell Analytical (BCA) for halogenated volatile organic compounds

(HVOC) using EPA Method 8010. The water quality parameters pH, turbidity, temperature, and specific conductance were measured in the field. Copies of the official analytical laboratory reports and chain-of-custody record are included in **Attachment D**. Laboratory analyses are summarized in **Table 2, Attachment B**.

## PLANNED PROGRESS NEXT QUARTER

Monthly gauging and quarterly sampling will continue for all groundwater monitoring wells (MW-1 through MW-13) and production wells (PW-1 and PW-2).

## DISCUSSION AND FINDINGS

### Groundwater Gradient and Flow

Groundwater contour maps, based on the gauging data collected January 12, February 21, and March 21, 1996 are presented in **Figure 2, Figure 3 and Figure 4**, respectively. The groundwater elevation data shown in these figures represent hydrostatic elevations of the first encountered (shallow) aquifer (between 25 and 40 feet below grade) beneath the Grayson Power Plant. The contour map is computer generated using a civil engineering program (AdCADD™) which calculates the distances and differences in head between combinations of three points. Contours are then created based on these calculations, assuming homogeneous and isotropic conditions.

The groundwater flow direction and gradient this quarter were similar to previous quarters. A summary of the results for the three months is as follows.

- The groundwater flow direction in the shallow aquifer on January 12, 1996 varied from the southeast to the south with an overall southerly flow direction. The gradient averaged 0.0032 feet per linear foot (ft/ft) during this period.

- On February 21, 1996, the groundwater flow direction ranged from south to southeast with an average gradient of 0.0033 ft/ft.

- The March 21, 1996, groundwater flow direction was similar to January and February with an average gradient of 0.0033 ft/ft.

Production wells PW-1 and PW-2 groundwater elevation data were not used in these contour maps due to the fact that the production wells are constructed to draw water from a deeper aquifer (approximately from 135 to 400 feet below grade).

**Dissolved Hydrocarbons**

Results of the analytical laboratory analyses of the groundwater samples collected during the first quarter 1996, as summarized in **Table 2**, revealed detectable HVOC concentrations in eleven of the thirteen monitoring wells and both production wells. The detected compounds included the following: 1,1 dichloroethene (1,1 DCE), cis 1,2 dichloroethene (cis 1,2 DCE), 1,1 dichloroethane (1,1 DCA), 1,2 dichloroethane (1,2 DCA), carbon tetrachloride, chloroform, trichloroethene (TCE), and tetrachloroethene (PCE).

The estimated shape and concentration gradient of the dissolved HVOC plume is similar to the previous quarter (fourth quarter) report. Interpretation of the dissolved hydrocarbon plume is based on the first quarter results and additional data collected during the soil gas survey and Strataprobe™ groundwater sampling conducted in May and July 1995. The Strataprobe™ groundwater sampling indicated that the highest concentrations of TCE were located up-gradient of the Grayson Power Plant and City Maintenance facility. The highest TCE concentrations encountered during groundwater sampling with the Strataprobe™ (3,000 µg/l) were detected at the recycling facility along Flower Street and at the fire department training center, south of Flower Street.

**Figure 5** shows the site isoconcentration map for dissolved TCE in the shallow aquifer and is based on the analytical results from this quarter. As observed in the previous quarter, TCE was not present in wells at the southeast corner of the site (MW-4, MW-5, MW-6, MW-7). The highest concentrations (1,300 to 1,400 µg/l) of TCE were encountered in the central and southern portions of the site (MW-2 and MW-11).

**Figure 6** shows the site isoconcentration map for dissolved PCE in the shallow aquifer based on the analytical results from this quarter. PCE was not present in wells at the southeast corner of the site (MW-5 and MW-7) and the southern central portion of the site (MW-10). Concentrations of PCE in the up-gradient wells (MW-8 and MW-13) remained at the same relatively low levels as with previous quarters. All other wells showed a slight increase in the PCE concentrations compared to the last quarter (fourth quarter).

Results of the analytical laboratory analysis of the groundwater samples from PW-1 and PW-2, screened in a lower aquifer, indicates the presence of TCE and PCE. Concentrations of TCE and PCE for both PW-1 and PW-2 are provided in **Figure 7**. Concentrations of PCE have remained relatively the same since groundwater monitoring was initiated in the first quarter of 1993. Concentrations of TCE have generally decreased since June 17, 1993. This quarter's results support the trend with a historic low concentrations of TCE reported in wells PW-1 and PW-2 (9.3 and 12 µg/l, respectively). An isoconcentration map for TCE and PCE is not provided for these wells due to the paucity of data (at least three data points are needed for contouring).

Where detected, the TCE concentrations decreased from the previous quarter in all monitoring wells with the exception of well MW-8 that showed a slight increase and well MW-11 that remained the same. The TCE concentrations decreased the most between the two quarters in well MW-1, decreasing from 1500 µg/l the fourth quarter of 1995 to 550 µg/l the first quarter of 1996. This is the first major decline in the TCE concentrations in well MW-1 since the quarterly monitoring started in March 1993. In general, the observed fluctuations in TCE concentrations is consistent with the findings of the soil and groundwater investigation completed in 1995 that indicated that the HVOCs detected in groundwater underneath the Grayson Power Plant originated from off-site sources upgradient of the site.

## General Chemistry

Except for field measurements of pH, turbidity and conductivity, no additional analyses for general chemistry were obtained this quarter. Results of stabilized field-measured turbidity and pH are provided in **Table 3, Attachment B**. Based on our discussions with the RWQCB, the general chemistry data reported for the previous quarters established sufficient levels of information needed to define the trend. Consequently, there is no need for analyzing samples for general chemistry.

If you have any questions regarding this report please contact either of us at (714) 660-1070.

Very truly yours,

BROWN AND CALDWELL

G. Richard Rees
Project Geologist

Dhiru Patel, P.E.
Project Manager

Attachments (4)

cc: Mr. Nicolas P. Cruz, City of Glendale

MH F96-0028 109.0756

# BROWN AND CALDWELL

January 31, 1996

Regional Water Quality Control Board
Los Angeles Region
101 Centre Plaza Drive
Monterey Park, California 91754-2156

51/7418-05

**Attention:** **Ms. Mercedes Hsu**

**Subject:** **CITY OF GLENDALE**
**GRAYSON POWER PLANT**
**GLENDALE, CALIFORNIA 91206**

**RWQCB File # 109.0756**
**SITE QUARTERLY REPORT**
**October 1 - December 31, 1995**

Dear Ms. Hsu:

Activities conducted at the subject site during the fourth quarter of 1995 are discussed below.

## BACKGROUND

In response to a letter from the Regional Water Quality Control Board (RWQCB), dated June 3, 1992, the City of Glendale initiated a quarterly groundwater monitoring program at the Grayson Power Plant starting the first quarter of 1993. The site is located near the intersection of the Golden State and the Ventura Freeways at 634 Bekins Way, Glendale, California. The site is divided into two sections by the Verdugo Wash. The Grayson Power Plant is located north of the wash, with the Los Angeles River along the plant's western border as shown in the site plan, **Figure 1 (Attachment A)**.

As part of the leak detection and tank monitoring program at the site, six groundwater monitoring wells (MW-1 through MW-6) were installed in November 1989 by ENSR Corporation of Camarillo, California. ENSR installed an additional well (MW-7) in March 1990. Five additional monitoring wells (MW-8 through MW-12) were added to the site in December 1993 by Fugro McClelland, Inc. Four of these monitoring wells were placed within the property boundaries of the Grayson Power Plant and one (MW-8) was located up-gradient of the site. Two water supply wells were previously installed to provide water for the plant


11 Von Karman, Suite 200, Irvine, CA 92714-4918
(714) 660-1878 Fax (714) 474-8943

cooling towers. Production well #1 (PW-1) was installed in May 1947 by Barber Bridge Drilling Corporation, Ltd. Production well #2 (PW-2) was installed in June 1959 by Roscoe Moss Company. Currently, the water supply wells are used as a backup to reclaimed water supplied by the Los Angeles-Glendale Reclaimed Water Plant for water used in the cooling towers at the Grayson Power Plant.

The groundwater monitoring program has resulted in four quarters of monitoring in 1993 for monitoring wells MW-1 through MW-6 and production wells PW-1 and PW-2. The quarterly monitoring program was expanded to include monitoring wells MW-7 through MW-12 starting the first quarter of 1994. An additional up-gradient monitoring well, MW-13, was installed in May 1994 and has been included in the monitoring program since July 1994.

A soil gas survey and Stratoprobe™ groundwater sampling were conducted at the site to delineate the extent and source of the HVOCs in groundwater. Brown and Caldwell and Transglobal Environmental Geochemistry (TEG) conducted the work between May and July of 1995. The work was completed per RWQCB recommended guidelines for conducting soil gas surveys. The results of this investigation indicated that the trichloroethene (TCE) plume originates up-gradient or north-northwest of the Grayson Power Plant and the northern adjacent properties (*Soil Vapor Assessment and Groundwater Sampling at the Grayson Power Plant/ Corporate Service Yard*, Brown and Caldwell, 1995).

## PROGRESS THIS PERIOD

During the fourth quarter of 1995, thirteen groundwater monitoring wells (MW-1 through MW-13) and the two site production wells (PW-1 and PW-2) were gauged monthly and sampled once. Gauging took place on October 10, November 22, and December 12, 1995. Groundwater samples were collected from the wells on December 12 and 13, 1995. Groundwater elevation data are presented in **Table 1, Attachment B.**

Floating hydrocarbon product was not detected in the monitoring wells prior to sampling or during monthly gauging. Refer to **Attachment C** for groundwater purging and sampling procedures, and for copies of the field data and groundwater sample collection logs. The thickness of free phase hydrocarbons in the production wells PW-1 and PW-2 were consistent with previous monthly measurements at 4.0 feet for PW-1 and 3.0 feet for PW-2.

Groundwater samples collected from the thirteen monitoring wells and two production wells were analyzed by Brown and Caldwell Analytical (BCA) for halogenated volatile organic compounds (HVOC) using EPA Method 8010. The water quality parameters pH, turbidity, temperature, and specific conductance were measured in the field. Copies of the official analytical laboratory reports and chain-of-custody record are included in **Attachment D** Laboratory analyses are summarized in **Table 2, Attachment B.**

## PLANNED PROGRESS NEXT QUARTER

Monthly gauging and quarterly sampling will continue for all groundwater monitoring wells (MW-1 through MW-13) and production wells (PW-1 and PW-2).

## DISCUSSION AND FINDINGS

### Groundwater Gradient and Flow

Groundwater contour maps, based on the gauging data collected October 10, November 22, and December 12, 1995 are presented in **Figure 2, Figure 3 and Figure 4**, respectively. The groundwater elevation data shown in these figures represent hydrostatic elevations of the first encountered (shallow) aquifer (between 25 and 40 feet below grade) beneath the Grayson Power Plant. The contour map is computer generated using a civil engineering program (AdCADD™) which calculates the distances and differences in head between combinations of three points. Contours are then created based on these calculations, assuming homogeneous and isotropic conditions. Sharp bends in the groundwater contours is an artifact of the computer program and is accentuated in areas with limited well control (along the boundaries).

The groundwater flow direction and gradient this quarter were similar to previous quarters. A summary of the results for the three months is as follows.

- The groundwater flow direction in the shallow aquifer on October 10, 1995, as determined by the computer program, varied from the east-southeast to the south with an overall flow direction toward the southeast. The gradient averaged 0.0030 feet per linear foot (ft/ft) during this period.

- On November 22, 1995, the groundwater flow direction ranged from south to southeast with an average gradient of 0.0031 ft/ft.

- The December 12 1995 groundwater flow direction was similar to October and November with an average gradient of 0.0034 ft/ft.

Production wells PW-1 and PW-2 groundwater elevation data were not used in these contour maps due to the fact that the production wells are constructed to draw water from a deeper aquifer (approximately from 135 to 400 feet below grade).

**Dissolved Hydrocarbons**

Results of the analytical laboratory analyses of the groundwater samples collected during the fourth quarter 1995, as summarized in **Table 2**, revealed detectable HVOC concentrations in nine of the thirteen monitoring wells and both production wells. The detected compounds included the following: 1,1 dichloroethene (1,1 DCE), carbon tetrachloride, chloroform, trichloroethene (TCE), and tetrachloroethene (PCE).

The estimated shape and concentration gradient of the dissolved HVOC plume is similar to the previous quarter (third quarter) report. Interpretation of the dissolved hydrocarbon plume is based on the forth quarter results and additional data collected during the soil gas survey and Strataprobe™ groundwater sampling conducted in May and July 1995. The Strataprobe™ groundwater sampling indicated that the highest concentrations of TCE were located up-gradient of the Grayson Power Plant and City Maintenance facility. The highest TCE concentrations encountered during groundwater sampling with the Strataprobe™ (3,000 $\mu g/\ell$) were detected at the recycling facility along Flower Street and at the fire department training center, south of Flower Street.

**Figure 5** shows the site isoconcentration map for dissolved TCE in the shallow aquifer and is based on the analytical results from this quarters groundwater sampling and analysis . As in previous quarters, the low or non-detectable concentrations (<0.05 ug/l this quarter) of TCE were encountered in the southeast corner of the site (MW-4, MW-5, MW-6, MW-7). Also, as in previous quarters, the highest concentrations (1,500 to 1,700 $\mu g/\ell$) of TCE were encountered in the central portion of the site (MW-1 and MW-2). Monitoring well MW-11 also revealed high concentrations of TCE (1,400 ug/l) in the south portion of the site.

**Figure 6** shows the site isoconcentration map for dissolved PCE in the shallow aquifer and is based on the analytical results from this quarter. PCE was not detected (<0.5 $\mu g/\ell$) in the southeast corner of the site (MW-4, MW-5, MW-6, MW-7). Concentrations of PCE in the up-gradient wells (MW-8 and MW-13) remained at the same relatively low levels as with previous quarters. All other wells showed decreases in the PCE concentrations compared to the last quarter (third quarter), being detected only in monitoring wells MW-9 (2.0 $\mu g/\ell$) and MW-11 (17 $\mu g/\ell$).

Results of the analytical laboratory analysis of the groundwater samples from PW-1 and PW-2, screened in a lower aquifer, the presence of TCE and PCE. Concentrations of TCE and PCE for both PW-1 and PW-2 are provided in **Figure 7**. Concentrations of PCE have remained relatively the same since groundwater monitoring was initiated in the first quarter of 1993. Concentrations of TCE have been generally decreasing since June 17, 1993. An isoconcentration map for TCE and PCE is not provided for these wells due to the paucity of data (at least three data points are needed for contouring).

The TCE concentrations for downgradient wells MW-11 and MW-12 show a generally increasing trend over the last nine quarters of monitoring. The generally increasing trend in TCE concentrations was also observed in upgradient monitoring wells MW-1, MW-2, and

MW-3 over the last nine quarters of monitoring. This increasing trend is consistent with the predictions based on the soil and groundwater investigation completed in 1995 and supports the conclusion that the VOCs detected in groundwater underneath the Grayson Power Plant originated from off-site sources upgradient of the site.

**General Chemistry**

Except for field measurements of pH, turbidity and conductivity, no additional analyses for general chemistry were obtained this quarter. Results of stabilized field-measured turbidity and pH are provided in **Table 3, Attachment B**. Based on our discussions with the RWQCB, the general chemistry data reported for the previous quarters established sufficient levels of information needed to define the trend. Consequently, there is no need for analyzing samples for general chemistry.

If you have any questions regarding this report please contact either of us at (714) 660-1070.

Very truly yours,

BROWN AND CALDWELL

GR Rees

G. Richard Rees
Project Geologist

Dhiru Patel

Dhiru Patel, P.E.
Project Manager

Attachments (4)

cc: Mr. Nicolas P. Cruz, City of Glendale

e:\hmd\7418\qtreport\I00003.RPT

# Appendix G
# INTERVIEW FORMS

**NA**

# E.2 PHASE II ENVIRONMENTAL SITE ASSESSMENT

**Phase II Environmental Site Assessment**
**Grayson Power Plant, 800 Air Way**
**Glendale, California 91201**

Prepared for:
City of Glendale Water and Power

Prepared by:
Stantec Consulting Services Inc.
290 Conejo Ridge Avenue
Thousand Oaks, California 91361

Project No.: 2057123300

July 8, 2016

## Sign-off Sheet and Signatures of Environmental Professionals

This document entitled Phase II Environmental Site Assessment Grayson Power Plant, 800 Air Way Glendale, California 91201 was prepared by Stantec Consulting Services Inc. (Stantec) for the account of City of Glendale Water and Power. The material in it reflects Stantec's best judgment in light of the information available to it at the time of preparation. Any use which a third party makes of this report, or any reliance on or decisions made based on it, are the responsibilities of such third parties. Stantec accepts no responsibility for damages, if any, suffered by any third party as a result of decisions made or actions based on this report.

All information, conclusions, and recommendations provided by Stantec in this document regarding the limited investigation have been prepared under the supervision of and reviewed by the professionals whose signatures appear below.

Author _____ (signature)

**Anuya Sawant, EIT, RMS**
**Project Engineering Specialist**

Quality Reviewer _____ (signature)

**StephAnnie Roberts**
**Senior Project Manager**

PROFESSIONAL GEOLOGIST
STEVEN C. BRADY
No. 6031
STATE OF CALIFORNIA

Approved by _____ (signature)

**Steven Brady, C.E.G., C.HG.**
**Senior Principal**

Table of Contents

**1.0 INTRODUCTION ..... 2.1**
**2.0 SITE BACKGROUND ..... 2.2**
2.1 SITE LOCATION AND FACILITY DESCRIPTION ..... 2.2
2.2 PRIOR ENVIRONMENTAL PHASE I ESA ..... 2.2
**3.0 GEOLOGY AND HYDROGEOLOGY ..... 3.2**
**4.0 SCOPE OF WORK ..... 4.4**
4.1 PRE-FIELD ACTIVITIES ..... 4.4
4.1.1 Health and Safety Plan ..... 4.4
4.1.2 Permitting ..... 4.4
4.1.3 Utility clearance ..... 4.4
4.2 SOIL BORING ADVANCEMENT ..... 4.4
4.2.1 Soil Sampling ..... 4.5
4.2.2 Soil Sample Analyses ..... 4.5
4.2.3 Soil Analytical Results ..... 4.5
4.3 GROUNDWATER ASSESSMENT ..... 4.7
4.3.1 Groundwater Hydropunch® Sampling ..... 4.7
4.3.2 Monitoring Well Gauging and Sampling ..... 4.7
4.3.3 Groundwater Sample Analyses – Hydropunch® and Monitoring Well Sampling ..... 4.7
4.3.4 Groundwater Analytical Results – Hydropunch® and Monitoring Well Sampling ..... 4.8
4.4 SOIL VAPOR PROBE INSTALLATION ..... 4.8
4.4.1 Soil Vapor Sampling ..... 4.9
4.4.2 Soil Vapor Sample Analyses ..... 4.9
4.4.3 Soil Vapor Analytical Results ..... 4.9
4.5 QA/QC SUMMARY ..... 4.10
4.6 WASTE HANDLING & STORAGE ..... 4.10
**5.0 CONCLUSIONS ..... 5.11**
**6.0 REFERENCES ..... 6.15**

## LIST OF FIGURES

Figure 1 Property Location Map
Figure 2 Site Map Showing Locations of Soil Vapor Probes, Soil Boring and Groundwater Monitoring Wells
Figure 3 Cross-Sections A-A'
Figure 4 Cross-Sections B-B'
Figure 5 Site Map with Soil VOCs Concentrations
Figure 6 Site Map with Soil TPH Concentrations
Figure 7 Site Map with Groundwater Detected VOCs Concentrations
Figure 8 Site Map with Groundwater TPH Concentrations
Figure 9 Site Map with Groundwater Detected Metal Concentrations
Figure 10 Site Map with Groundwater Hexavalent Chromium Concentrations
Figure 11 Site Map with Soil Vapor VOCs Concentrations

## LIST OF TABLES

Table 1 Sampling and Analysis Detail
Table 2 Soil Analytical Results – Volatile Organic Compounds
Table 3 Soil Analytical Results – Total Petroleum Hydrocarbons
Table 4 Soil Analytical Results – CAM Metals
Table 5 Summary and Comparison of Background Metals Concentrations
Table 6 Soil Analytical Results – Hexavalent Chromium
Table 7 Groundwater Analytical Results – Volatile Organic Compounds
Table 8 Groundwater Analytical Results – Total Petroleum Hydrocarbons
Table 9 Groundwater Analytical Results – CAM Metals/Hexavalent Chromium
Table 10 Soil Vapor Analytical Results – Volatile Organic Compounds
Table 11 HERO Vapor Intrusion Model Results

## LIST OF APPENDICES

APPENDIX A SOIL BORING LOGS
APPENDIX B LOS ANGELES COUNTY DEPARTMENT OF ENVIRONMENTAL HEALTH PERMIT
APPENDIX C LABORATORY ANALYTICAL RESULTS AND CHAIN OF CUSTODY
APPENDIX D HERO VAPOR INTRUSION MODEL CALCULATIONS
APPENDIX E LIMITATIONS

**PHASE II ENVIRONMENTAL SITE ASSESSMENT GRAYSON POWER PLANT, 800 AIR WAY GLENDALE, CALIFORNIA 91201**

July 8, 2016

## EXECUTIVE SUMMARY


Stantec Consulting Services Inc. (Stantec) was contracted by the City of Glendale Department of Water and Power (GWP) to perform a Phase II Environmental Site Assessment (ESA) at the location of the Power Plant located at 800 Air Way in Glendale, California.

This investigation of subsurface conditions at the Property was conducted to evaluate Recognized Environmental Conditions (RECs) identified in a prior Phase I ESA (Stantec, 2016) in connection with the current and historical use (Power Plant) of the Property.

GWP is proposing to redevelop a portion of the Power Plant Property as part of a repowering project. In conjunction with the proposed redevelopment, GWP contracted Stantec to conduct the initial Phase I ESA and consequently the Phase II ESA.

To investigate subsurface conditions for the presence of contaminants that may have resulted from current and historical activities on and/or adjacent to the Property the following activities were conducted: 1) a geophysical survey was conducted to identify the presence of underground utilities prior to drilling, 2) sixteen soil borings were advanced, 3) six temporary soil vapor sampling wells were installed, 4) four existing groundwater monitoring wells were gauged, purged and sampled, with samples submitted to a fixed based laboratory for chemical analysis, 5) soil, Hydropunch® groundwater, and soil vapor samples were collected and submitted to a fixed based laboratory for chemical analysis, and 6) review and interpretation of the assessment findings (this report).

SOIL ASSESSMENT

A total of 16 soil borings were advanced to a maximum depth of up to 50 feet below ground surface (bgs); three borings were located inside the main Power Plant building; ten borings were located adjacent to the five cooling towers; two borings were located adjacent to the two chemical storage areas; and one boring was located in the vicinity of the underground tunnel near cooling tower #4.

A total of 32 soil samples were collected from the 16 borings at depths ranging from 5 to 40 feet bgs, and analyzed for volatile organic compounds (VOCs), total petroleum hydrocarbons – carbon chain distinction (TPHcc); 16 of these samples were also analyzed for hexavalent chromium. The samples selected for analyses of VOCs and TPHcc were based on 1) the highest photoionization detector (PID) readings and 2) the terminal depth at each boring location. In addition, at each soil boring location, surface soil samples were also collected and analyzed for CAM 17 metals.

VOC Analysis

VOCs (benzene, toluene, xylenes, trichloroethene (TCE), and acetone) were detected at low concentrations within four of the 32 soil samples collected. These VOCs were above laboratory method detection limits (MDLs); however, they were below the United States Environmental Protection Agency Regional Screening Levels (USEPA RSLs) for industrial and residential use and

the San Francisco Regional Water Quality Control Board Environmental Screening Levels (SFRWQCB ESLs), respectively.

TPH Analysis

All 32 soil boring soil samples were submitted for TPHcc analysis. TPH was identified above laboratory MDLs in 22 soil samples, ranging from 1.1 mg/Kg to 27,000 mg/Kg total TPH, below regulator screening levels. Based on the TPH carbon ranges, the contaminants appear to be diesel and fuel oil related petroleum. This analysis was conducted to identify potential areas in which petroleum related contamination may be present for soil management purposes during construction.

Metal Analysis

Additionally, one surface sample was collected at each soil boring location and analyzed for CAM 17 Metals. Various metals were detected in each of the soil samples.

Arsenic was detected in all 16 soil samples collected from the soil borings at concentrations exceeding the USEPA RSLs for residential use and Office of Environmental Health Hazard Assessment (OEHHA) screening levels for residential and industrial use. Lead was detected in two samples above OEHHA screening levels for residential use.

A comparison of the arsenic and lead concentrations detected at the Property with California background metal concentrations indicates that these concentrations are within the typically occurring background range. All other detected metals are considered to be within the typical range for Southern California soil and are not present at concentrations exceeding the SFRWQCB ESLs, USEPA RSLs, or OEHHA screening levels established for either residential or industrial use.

A total of 16 samples at depths ranging from 5 feet bgs to 40 feet bgs were selected for hexavalent chromium analysis. There were no detectable concentrations of hexavalent chromium above laboratory MDLs in the soil samples analyzed.

GROUNDWATER ASSESSMENT

Eight groundwater samples were collected from soil boring grab samples (Hydropunch®) and existing monitoring wells.

Volatile Organic Compounds Analysis

Chlorinated VOCs were detected above their respective California Department of Public Health Maximum Concentration Levels (CDPH MCLs) and SFRWQCB ESLs in all eight groundwater samples collected (grab and monitoring wells samples).

Total Petroleum Hydrocarbons Analysis

All eight groundwater samples were also submitted for TPHcc analysis. TPH was identified above laboratory MDLs in seven samples. Based on the TPH carbon ranges identified (C6-C44), the contaminants appear to be gasoline, diesel, and fuel oil related petroleum.

Metals Analysis

Arsenic, chromium, lead, and nickel concentrations exceeding the CDPH MCL were detected in six of the eight groundwater samples.

Hexavalent Chromium Analysis

Hexavalent chromium was not observed in any of the four HydroPunch® groundwater samples. However, all four samples collected from the existing monitoring wells exhibited hexavalent chromium concentrations exceeding its CDPH MCL.

Temporary Soil Vapor Well Installation and Sampling

Temporary nested soil vapor wells were installed at six soil boring locations (SB-6, 8, 12, 14, 15, and 16) on the Property. Sampling for soil vapor occurred on May 2, 2016, after the temporary soil vapor wells equilibrated with the subsurface and were purged at low flow rates. Soil vapor samples were collected in 1.4 L Summa® canisters with regulators calibrated to slow the vapor intake to below 200 milliliters per minute.

Following soil vapor collection, the tubing in each boring was removed, the boring was properly abandoned by backfilling the former borehole with bentonite grout, and the ground surface was restored to its previous state (i.e., concrete, asphalt, soil).

Soil Vapor Sample Analyses and Results

A total of 15 soil vapor samples were collected during the site assessment. VOCs were detected in one or more of the soil vapor samples at concentrations above their respective screening levels. However, the detected concentrations were evaluated using the Human and Ecological Risk Office (HERO) Vapor Intrusion Model. The results indicated that the detected concentrations posed an insignificant cancer risk and a low non-cancer hazard. Based on the site-specific calculation conducted using the HERO Vapor Intrusion Model no further actions appear warranted to assess or mitigate the limited soil vapors identified at the site. Refer to Appendix D for a copy of the HERO calculations and Table 11 for tabulated HERO Cancer and Non Cancer Hazard exposure screening levels.

# 1.0 INTRODUCTION

Stantec Consulting Services Inc. (Stantec) was contracted by the City of Glendale Department of Water and Power (GWP) to perform a Phase II Environmental Site Assessment (ESA) at the location of the Power Plant located at 800 Air Way in Glendale, California (Property, Figures 1 and 2).

This investigation of subsurface conditions at the Property was conducted to evaluate Recognized Environmental Conditions (RECs) identified in a prior Phase I ESA (Stantec, 2016) in connection with the current and historical use (Power Plant) of the Property.

GWP is proposing to redevelop a portion of the Power Plant Property as part of a repowering project. GWP plans to demolish the Grayson Power Plant Boiler Building; replace cooling towers 1 through 5 to more efficient models; and replace the generation units between Cooling Tower 1 and 2, designated as Unit 8A, 8B, and 8C, with the exception of Unit 9. A majority of the buildings located at the Grayson Power Plant, with the exception of Unit 9 built in 2003, were completed in or before 1977 and will be replaced with more reliable, efficient, and cleaner units. In conjunction with the proposed redevelopment, GWP contracted Stantec to conduct the initial Phase I ESA and consequently the Phase II ESA.

To investigate subsurface conditions for the presence of contaminants that may have resulted from current and historical activities on the Property the following activities were conducted: 1) a geophysical survey was conducted to identify the presence of underground utilities prior to drilling, 2) 16 soil borings were advanced, 3) six temporary soil vapor sampling wells were installed, 4) four existing groundwater monitoring wells were gauged, purged, and sampled and submitted to a fixed based laboratory for chemical analysis, 5) soil, Hydropunch® groundwater, and soil vapor samples were collected and submitted to a fixed based laboratory for chemical analysis, and 6) review and interpretation of the assessment findings with documentation and recommendations within this report.

# 2.0 SITE BACKGROUND

## 2.1 SITE LOCATION AND FACILITY DESCRIPTION

The Property is an active Power Plant located at 800 Air Way in the City of Glendale in California. The Property is approximately 12.4 acres in size and has operated as a Power Plant since reportedly 1934, prior to which it was vacant and undeveloped land. Surrounding properties are a mix of commercial and industrial properties. The Property is also listed with the following additional addresses: 5750 San Fernando Road and 634 Bekins Way. A Property location map is illustrated on Figure 1.

## 2.2 PRIOR ENVIRONMENTAL PHASE I ESA

Based on the results of Stantec's Phase I ESA, dated December 16, 2015, the following recognized environmental conditions (RECs) were identified in connection with the Property:

- Historical and current presence of three chemical storage areas which stored petroleum hydrocarbons and hazardous chemicals in varying quantities;
- Existence of five cooling towers on the Property since the 1940's;
- Presence of six boilers on the Property;
- Presence of numerous 55-gallon drums and barrels containing lube oil storage in the basement of the Boiler room building. Lube oil for pumps, turbines and air compressors; and synthetic jet engine oil was observed. Most drums were stored on secondary containment which was placed on concrete floor. No spills/leaks were observed;
- Presence of multiple fuel oil underground storage tanks (USTs) on the Property;
- Presence of former fuel oil and chemical containing aboveground storage tanks (ASTs);
- Historical and current storage of polychlorinated biphenyl (PCB) containing pad and pole mounted transformers on the Property; and
- Historical use of adjacent properties as gas stations and manufacturer of aerospace products.

Per GWP's request, and based on the Phase I ESA findings and the nearby facility (PRC DESOTO) detailed below, Stantec completed this Phase II ESA to screen soil, soil vapor and groundwater at the Property for potential presence of volatile organic compounds (VOCs), petroleum hydrocarbons, and metals (including hexavalent chromium).

# 3.0 GEOLOGY AND HYDROGEOLOGY

The Property is located at an elevation of approximately 467 feet above mean sea level (ft msl). Based on the topography and existing surface conditions, general surface water flow is to the southwest.

According to the Department of Water Resources' (DWR) Bulletin 118, The Property is located in the southeastern end of the San Fernando Valley Basin. The Basin consists of Quaternary alluvial valley fill with a maximum depth of approximately 1,000 feet. Alluvial deposits which comprise

the eastern portion of the basin consist almost entirely of detrital material derived from the crystalline basement complex of the San Gabriel Mountains. These sediments contain a majority of sand and gravel interbedded with silt and clay.

Based on soil samples collected during this Phase II ESA, the soil on the Property consisted predominantly of silty sand, sandy silt with a few layers of poorly graded sand or clay.

The San Fernando Valley basin is characterized by high soil permeability and groundwater production. Groundwater is generally confined within the basin with depth to groundwater approximately 40 – 200 feet. The general direction of groundwater flow is southwesterly from the recharge areas on the alluvial fans along the edges of the valley fill toward the basin outlet area at the Los Angeles River Narrows.

Groundwater monitoring and sampling conducted at the Property during this Phase II ESA reported the depth to water as approximately 43 feet below ground surface (bgs).

Refer to Appendix A for a copy of the soil boring logs.

# 4.0 SCOPE OF WORK

From April 25 through May 3, 2016, Stantec conducted the oversight of the utility clearance survey, soil boring and soil vapor well installation, collected soil, groundwater, and soil vapor samples at the Property, and submitted the samples to a fixed based laboratory for chemical analysis.

## 4.1 PRE-FIELD ACTIVITIES

### 4.1.1 Health and Safety Plan

A Health and Safety Plan was prepared as required by the Occupational Health and Safety Administration (OSHA) Standard "Hazardous Waste Operations and Emergency Response" guidelines (29 CFR 910.120). The document was reviewed and signed by all on-site consulting personnel and subcontractors prior to performing work at the Property.

### 4.1.2 Permitting

Prior to conducting subsurface work a permit was obtained from the Los Angeles County Department of Environmental Health (LACEH) for the advancement of soil borings. A copy of the LACEH permit is presented as Appendix B.

### 4.1.3 Utility clearance

Underground Service Alert (USA) was contacted to delineate subsurface utilities with surface markings. On April 18, 2016, a geophysical survey was conducted by a private utility locating company, Southwest Geophysics (SW Geophysics) of San Diego, California to clear the areas surrounding the boring locations.

## 4.2 SOIL BORING ADVANCEMENT

From April 25 through April 29, 2016, Stantec oversaw CoreProbe International, Inc. of San Gabriel, California advance soil borings SB-1 through SB-16. These borings were advanced using a 2.5-inch diameter stainless steel hand auger to a depth of 5' bgs; subsequently, a Geoprobe direct push rig, equipped with 2.25-inch diameter rods was utilized to advance borings to their total depths (ranging from 40-50 feet bgs). Depth of each boring varied based on subsurface conditions. Below is a list of the approximate depths for each soil boring.

- Nine borings (SB-1, 2, 4, 6-8, 10, 11, and 13) were advanced to 40 feet;
- Four boring (SB-3, SB-5, SB-9 and SB-12) were advanced to 50 feet;
- SB-14, SB-15 and SB-16 were advanced using a limited access rig (LAR) to depths of 15, 11.5, and 11.5 feet bgs, respectively. These borings were advanced with the LAR based on the limited access within the basement of the Power Plant building.

- Since the Power Plant was active at the time of the Phase II ESA, drilling in the transformers storage area/switch rack area (potential PCB transformers) was not conducted.

The soil borings were logged by Stantec field staff using the Unified Soil Classification System, working under the supervision of a California registered Professional Geologist. Copies of Stantec boring logs are presented as Appendix A. Sampling equipment was cleaned between each sampling interval. Soil samples were screened for hydrocarbon vapors using a portable photo-ionization detector (PID).

Refer to Figure 2 for a site map depicting the soil boring locations and geological cross section centerlines. Also, refer to Figures 3 and 4 for a Site Map with Geological Cross Section Centerlines, and Geological Cross Sections A-A' and B-B', respectively.

### 4.2.1 Soil Sampling

Continuous core soil sampling was conducted using dedicated acetate liners placed within the direct push rods at five-foot intervals. Soil sampling was performed in accordance with the ASTM Method 1586-84. Soil samples were collected for subsequent laboratory analysis using USEPA Method 5035 approved sampling devices and laboratory supplied containers, as applicable. Refer to Table 1 for a table detailing each soil sample collected (depth, location, analysis, etc.).

### 4.2.2 Soil Sample Analyses

Soil samples were submitted to American Analytics of Chatsworth, California for chemical analysis under chain-of-custody procedures. Soil samples were analyzed for VOCs by USEPA Method 8260B, for total petroleum hydrocarbons – carbon chain (TPHcc) by USEPA Method 8015M, for CAM 17 Metals (antimony, arsenic, barium, beryllium, cadmium, chromium, cobalt, copper, lead, mercury, molybdenum, nickel, selenium, silver, thallium, vanadium, and zinc). by USEPA Methods 6010B/7000 and 7470/7471A and for hexavalent chromium by USEPA Method 7199. Certified laboratory reports are included as Appendix C, Tables 2 through 5 present laboratory results of soil analytical data.

### 4.2.3 Soil Analytical Results

A total of 32 soil boring soil samples and 16 surface soil samples were collected during the site assessment; samples were collected based on field findings and PID readings from each soil boring (Figure 2). The field screening PID measurements recorded varied from 0.0 to 136 parts per million per by volume (ppmv). PID measurements for each soil boring are included on the soil boring logs.

<u>Volatile Organic Compound Analysis</u>

VOCs (benzene, toluene, xylenes, TCE, and acetone) were detected at low concentrations within four (SB-3-40, SB-9-5, SB-9-10, and SB-10-15) of the 32 soil samples collected. These VOCs were above laboratory method detection limits (MDLs); however, they were below the USEPA Regional Screening Levels (USEPA RSLs) for industrial and residential use and the San Francisco Regional Water Quality Control Board Environmental Screening Levels (SFRWQCB ESLs),

respectively. The laboratory results for VOC concentrations in soil are summarized in Table 2 and Figure 5.

Total Petroleum Hydrocarbon Analysis

All 32 soil samples were submitted for TPHcc analysis. TPH was identified above laboratory MDLs in 22 soil samples, ranging from 1.1 mg/Kg to 27,000 mg/Kg total TPH. Based on the TPH carbon ranges identified (C10-C44), the contaminants appear to be diesel and fuel oil related petroleum. An elevated TPH of 27,000 mg/Kg was detected east of cooling tower #4 at approximately 25 feet bgs (SB-8-25). This analysis was conducted to identify potential areas in which petroleum related contamination may be present for soil management purposes during construction. The laboratory results for TPHcc concentrations in soil are summarized in Table 3, along with approximate extents in Figure 6.

CAM 17 Metals Analysis

Additionally, one surface sample was collected at each soil boring location and analyzed for CAM 17 Metals. Various metals were detected in each of the soil samples. The following are the maximum concentrations:

- Arsenic (11 mg/kg at SB-3);
- Barium (230 mg/kg at SB-12);
- Cadmium (3.8 mg/kg at SB-6);
- Chromium (30 mg/kg at SB-7);
- Cobalt (15 mg/kg at SB-3);
- Copper (68 mg/kg at SB-12);
- Lead (220 mg/kg at SB-6);
- Mercury (0.31 mg/kg at SB-6);
- Nickel (26 mg/kg at SB-8);
- Vanadium (63 mg/kg at SB-3); and
- Zinc (290 mg/kg at SB-6).

Arsenic was detected in the 16 soil samples at concentrations exceeding the USEPA RSLs for residential use and Office of Environmental Health Hazard Assessment (OEHHA) screening levels for residential and industrial use. Lead was detected in two samples above OEHHA screening levels for residential use. Refer to Table 4 for a summary of metal analysis.

A comparison of the arsenic and lead concentrations detected at the Property with California background metal concentrations (Table 5) indicates that these concentrations, with the exception of two lead concentrations (SB-6-1 and SB-12-1), are within the typically occurring background range.

Lead was detected in soil within soil samples SB-6-1 (220 mg/Kg) and SB-12-1 (170 mg/Kg) above both its respective screen and background levels. To further evaluate the leaching potential of

lead within soil at the Property, Stantec requested American Analytics to conduct a toxicity characteristic leaching procedure (TCLP) analysis on a composite sample collected. Based on the TCLP analysis the lead was not identified above its TCLP levels and thus does not pose a risk to potential leaching from the soil into groundwater. Refer to Appendix C for a copy of the laboratory analytical results.

All other detected metals are considered to be within the typical range for Southern California soil and are not present at concentrations exceeding the SFRWQCB ESLs, USEPA RSLs, or OEHHA screening levels established for either residential or industrial use.

Hexavalent Chromium Analysis

A total of 16 samples at depths ranging from 5 feet bgs to 40 feet bgs were selected for hexavalent chromium analysis. There were no detectable concentrations above laboratory MDLs in any of the soil samples analyzed. The laboratory results for hexavalent chromium concentrations in soil are summarized in Table 6.

## 4.3 GROUNDWATER ASSESSMENT

Groundwater was sampled using Hydropunch® sampling techniques at select soil boring locations, as well as, from existing monitoring wells at the Property.

### 4.3.1 Groundwater Hydropunch® Sampling

Groundwater samples were collected from soil borings SB-3, SB-5, SB-9, and SB-12 using Hydropunch® sampling techniques. All Hydropunch® groundwater samples were collected via HydroPunch® technologies using clean, disposable, 0.25-inch diameter Nylaflow tubing with a check valve probe, which was set into groundwater. Groundwater samples were collected from the soil borings at the initial encounter of groundwater (approximately between 41 - 44 feet bgs). A 2-inch disposable bailer was used to sample from the monitoring wells after a three-volume purge.

The groundwater samples were collected into laboratory supplied 1-liter amber jars, 500-mL polyethylene bottles, and 40-mL VOA vials for subsequent laboratory analyses. Table 1 includes a list of sample locations, sample depths, sample media, and laboratory analytical parameters.

### 4.3.2 Monitoring Well Gauging and Sampling

On May 3, 2016, Stantec gauged, purged, and sampled existing groundwater monitoring wells B-7, MW-1, and MW-9. Depth to water was measured at depths ranging from 42.68 to 44.92 feet bgs in the wells.

### 4.3.3 Groundwater Sample Analyses – Hydropunch® and Monitoring Well Sampling

All groundwater samples were transported to a fixed laboratory (American Analytics) and analyzed for VOCs via USEPA Method 8260B, TPHcc by USEPA Method 8015M, CAM metals via USEPA Method 6010/7471A, and hexavalent chromium via USEPA Method 7199.

### 4.3.4 Groundwater Analytical Results – Hydropunch® and Monitoring Well Sampling

Volatile Organic Compounds Analysis

Concentrations of chlorinated VOCs including PCE, TCE, and 1,1-dichloroethene (1,1-DCE) exceeded their screening criteria (California Department of Public Health Maximum Contaminant Levels [CDPH – MCLs] and SFRWQCB ESLs) in all eight groundwater samples collected (grab and monitoring wells samples). Cis-1,2-dichloroethene (cis-1,2-DCE) was identified in one grab sample and all four monitoring well samples above its CDPH MCL and SFRWQCB ESL. Chloroform concentrations exceeded its SFRWQCB ESL in two grab samples and all four monitoring well samples. The laboratory results for VOCs concentrations in groundwater are summarized in Table 7 and Figure 7.

Total Petroleum Hydrocarbons Analysis

All eight groundwater samples were submitted for TPHcc analysis. TPH was identified above laboratory MDLs in seven samples, ranging from 0.010 mg/L to 0.410 mg/L total TPH. Based on the TPH carbon ranges identified (C6-C44), the contaminants appear to be gasoline, diesel, and fuel oil related petroleum.

The laboratory results for TPHcc concentrations in groundwater are summarized in Table 8 and Figure 8.

CAM 17 Metals Analysis

Arsenic, chromium, lead, and nickel concentrations exceeding the CDPH MCL were detected in six of the eight groundwater samples. The laboratory results for CAM metals concentrations in groundwater are summarized in Table 9 and Figure 9.

Hexavalent Chromium Analysis

Hexavalent chromium concentrations were not observed in the four HydroPunch® groundwater samples. However, all four samples collected from the monitoring wells exhibited hexavalent chromium concentrations exceeding its CDPH MCL. The laboratory results for hexavalent chromium concentrations in groundwater are summarized in Table 9 and Figure 10.

## 4.4 SOIL VAPOR PROBE INSTALLATION

Temporary soil vapor wells were installed at six soil boring locations (SB-6, 8, 12, 14, 15, and 16) on the Property. Three of the soil borings (SB-6, 8, and 12) were completed with triple nested wells, constructed of ¼" Nylaflow™ Teflon tubing and 10" Penn Plax™ vapor implants, set at depths of 5, 15, and 30 feet bgs. Borings SB-14, SB-15, and SB-16 were completed with double-nested soil vapor wells at depths of 5 and 15 feet bgs for SB-14 and 5, and 11 feet bgs for SB-15 and SB-16. Due to refusal at SB-15 and SB-16, total depth of 15 feet was unattainable and therefore the probe was installed at 11 feet bgs.

All temporary soil vapor probes were lowered to their designated depth via a PVC tremmie pipe, to ensure the probes were centered and upright in the borehole. The borehole annulus was filled with approximately 1.5-feet of clean #2/12 sand filter pack, topped with one foot of

dry granulated bentonite, and subsequently overlain by a minimum of three feet of hydrated bentonite. Upon completion of probe construction, all probes were properly labeled and three-way plastic valves were fit onto each probe.

### 4.4.1 Soil Vapor Sampling

Sampling for soil vapor occurred on May 2, 2016, after the temporary soil vapor wells equilibrated with the subsurface and were purged at low flow rates. Once the purge was completed, soil vapor samples from each location were collected in 1.4 L Summa® canisters with regulators calibrated to slow the vapor intake to below 200 milliliters per minute.

A leak detection constituent (isopropyl alcohol) was used at each sample location to ensure samples were not diluted with ambient air. Isopropyl alcohol was sprayed on a cloth which was wrapped around the flow path. Following soil vapor collection, the tubing in each boring was removed, the boring was properly abandoned by backfilling the former borehole with bentonite grout, and the ground surface was restored to its previous state (i.e., concrete, asphalt, soil).

### 4.4.2 Soil Vapor Sample Analyses

The soil vapor samples, collected into Summa® canisters, were subsequently transported to a fixed-based laboratory (American Analytics) for VOC analysis via USEPA Method TO-15. Copies of the final laboratory analytical reports and chain of custody documentation are provided in Appendix C.

### 4.4.3 Soil Vapor Analytical Results

A total of 15 soil vapor samples were collected during the site assessment. VOCs were detected in one or more of the soil vapor samples at the noted maximum concentrations in micrograms per cubic meter (µg/L):

- Acetone (0.021 µg/L at SB-6-30-SV);
- Carbon Tetrachloride (0.025 µg/L at SB-16-11-SV);
- Chloroform (0.24 µg/L at SB-8-5-SV);
- 2-Butanone (0.027 µg/L at SB-6-30-SV);
- 1,1-DCE (2.4 µg/L at SB-12-30-SV);
- cis-1,2-Dichloroethene (0.036 µg/L at SB-16-11-SV);
- Ethanol (0.028 µg/L at SB-16-11-SV);
- Ethylbenzene (0.037 µg/L at SB-6-30-SV);
- 4-Ethyltoluene (0.022 µg/L at SB-6-30-SV);
- Heptane (0.029 µg/L at SB-6-15-SV);
- n-Hexane (0.064 µg/L at SB-6-15-SV);
- 1,1,2-Trichloro-1,2,2-Trifluoroethane (R113; 0.023 µg/L at SB-16-11-SV);
- 2,2,4-Trimethylpentane (0.036 µg/L at SB-8-5-SV);

- Methyl isobutyl ketone (MIBK; 0.01 µg/L at SB-6-30-SV);
- Propylene (0.20 µg/L at SB-8-5-SV);
- n-Propylbenzene (0.016 µg/L at SB-6-30-SV);
- Styrene (0.083 µg/L at SB-16-11-SV);
- PCE (1.6 µg/L at SB-12-30-SV);
- TCE (9.1 µg/L at SB-12-30-SV);
- Tetrahydrofuran (THF; 0.021 µg/L at SB-6-30-SV);
- 1,2,4-Trimethylbenzene (0.17 µg/L at SB-8-15-SV);
- 1,3,5-Trimethylbenzene (0.036 µg/L at SB-6-30-SV);
- Toluene (0.29 µg/L at SB-8-15-SV);
- o-Xylene (0.14 µg/L at SB-8-15-SV); and
- m,p-Xylenes (0.42 µg/L at SB-8-30-SV).

PCE concentrations exceeded the SFRWQCB ESLs in 10 of 15 samples analyzed at depth ranging from 5 to 30 feet bgs. The laboratory results for VOCs concentrations in soil vapor are summarized in Table 10 and Figure 11.

The detected concentrations were evaluated using the Human and Ecological Risk Office (HERO) Vapor Intrusion Model. The results indicated that the detected concentrations posed an insignificant cancer risk and a low non-cancer hazard. Based on the site-specific calculation conducted using the HERO Vapor Intrusion Model, no further actions appear warranted to assess or mitigate the limited soil vapors identified at the Property. Refer to Appendix D for a copy of the HERO calculations and Table 11 for tabulated HERO Cancer and Non Cancer Hazard exposure screening levels.

## 4.5 QA/QC SUMMARY

Laboratory QA/QC data (method blanks, laboratory control samples, duplicates, and matrix spike samples) were reviewed for compliance with QA/QC objectives. Based on this validation process, the data contained herein are adequate for the purposes of this report.

Analytical results for all trip blanks indicate VOC concentrations were non-detect within laboratory detection limits.

## 4.6 WASTE HANDLING & STORAGE

During operations, hand augers, sampling tools, and down-hole equipment were cleaned prior to and in between each sampling interval. Rinsate water, construction debris, and soil cuttings generated during operations were placed in a California Department of Transportation (DOT)-approved, 55-gallon drum on Site pending characterization and disposal. Following waste profiling (based on above referenced soil sampling results) and coordination, the drum containing the investigation-derived waste was removed and transported off-site to an

appropriate waste disposal facility. Documentation will be provided in a separate letter along with manifests.

# 5.0 CONCLUSIONS

Conclusions of the subsurface investigation are provided below.

SOIL ASSESSMENT

A total of 16 soil borings were advanced to a maximum depth of up to 50 feet bgs; three borings were located inside the Power Plant building; ten borings were located adjacent to the five cooling towers; two borings were located adjacent to the two chemical storage areas; and one boring was located in the vicinity of the underground tunnel near cooling tower #4.

A total of 32 soil samples were collected from the 16 borings at depths ranging from 5 to 40 feet bgs, and analyzed for VOCs, TPHcc; 16 of these samples were also analyzed for hexavalent chromium. The samples selected for analyses of VOCs and TPHcc were based on 1) the highest PID readings and 2) the terminal depth at each boring location. In addition, at each soil boring location, surface soil samples were also collected and analyzed for CAM 17 metals.

VOC Analysis

VOCs (benzene, toluene, xylenes, TCE, and acetone) were detected at low concentrations within four of the 32 soil samples collected. These VOCs were above laboratory MDLs; however, they were below the USEPA RSLs for industrial and residential use and the SFRWQCB ESLs, respectively.

TPH Analysis

All 32 soil boring soil samples were submitted for TPHcc analysis. TPH was identified above laboratory MDLs in 22 soil samples, ranging from 1.1 mg/Kg to 27,000 mg/Kg total TPH. Based on the TPH carbon ranges, the contaminants appear to be diesel and fuel oil related petroleum. This analysis was conducted to identify potential areas in which petroleum related contamination may be present for soil management purposes during construction. The results indicated low levels of TPH within soil at the Property.

Metal Analysis

Additionally, one surface sample was collected at each soil boring location and analyzed for CAM 17 Metals. Various metals were detected in each of the soil samples.

Arsenic was detected in all 16 soil samples collected from the soil borings at concentrations exceeding the USEPA RSLs for residential use and OEHHA screening levels for residential and industrial use. Lead was detected in two samples above OEHHA screening levels for residential use.

A comparison of the arsenic and lead concentrations detected at the Property with California background metal concentrations indicates that these concentrations are within the typically occurring background range. All other detected metals are considered to be within the typical

range for Southern California soil and are not present at concentrations exceeding the SFRWQCB ESLs, USEPA RSLs, or OEHHA screening levels established for either residential or industrial use.

A total of 16 samples at depths ranging from 5 feet bgs to 40 feet bgs were selected for hexavalent chromium analysis. There were no detectable concentrations of hexavalent chromium above laboratory MDLs in any of the soil samples analyzed.

GROUNDWATER ASSESSMENT

Eight groundwater samples were collected from soil boring grab samples and existing monitoring wells.

Volatile Organic Compounds Analysis

Chlorinated VOCs were detected above their respective CDPH MCLs and SFRWQCB ESLs in all eight groundwater samples collected (grab and monitoring wells samples).

Total Petroleum Hydrocarbons Analysis

All eight groundwater samples were also submitted for TPHcc analysis. TPH was identified above laboratory MDLs in seven samples. Based on the TPH carbon ranges identified (C6-C44), the contaminants appear to be gasoline, diesel, and fuel oil related petroleum.

Metals Analysis

Arsenic, chromium, lead, and nickel concentrations exceeding the CDPH MCL were detected in six of the eight groundwater samples.

Hexavalent Chromium Analysis

Hexavalent chromium was not observed in any of the four HydroPunch® groundwater samples. However, all four samples collected from the existing monitoring wells exhibited hexavalent chromium concentrations exceeding its CDPH MCL.

Temporary Soil Vapor Well Installation and Sampling

Temporary nested soil vapor wells were installed at six soil boring locations (SB-6, 8, 12, 14, 15, and 16) on the Property. Sampling for soil vapor occurred on May 2, 2016, after the temporary soil vapor wells equilibrated with the subsurface and were purged at low flow rates. Soil vapor samples were collected in 1.4 L Summa® canisters with regulators calibrated to slow the vapor intake to below 200 milliliters per minute.

Following soil vapor collection, the tubing in each boring was removed, the boring was properly abandoned by backfilling the former borehole with bentonite grout, and the ground surface was restored to its previous state (i.e., concrete, asphalt, soil).

Soil Vapor Sample Analyses and Results

A total of 15 soil vapor samples were collected during the site assessment. VOCs were detected in one or more of the soil vapor samples at concentrations above their respective screening levels. However, the detected concentrations were evaluated using the HERO Vapor Intrusion Model. The results indicated that the detected concentrations posed an insignificant cancer risk and a low non-cancer hazard. Based on the site-specific calculation conducted using the HERO Vapor Intrusion Model, no further actions appear warranted to assess or mitigate the limited soil vapors identified at the site. Refer to Appendix D for a copy of the HERO calculations and Table 11 for tabulated HERO Cancer and Non Cancer Hazard exposure screening levels.

# 6.0 REFERENCES

California Department of Toxic Substances Control, 2005, Title 22 Tables http://www.dtsc.ca.gov/LawsRegsPolicies/Title22/OEARA_REG_Title22_Tables.cfm

California Regional Water Quality Control Board (CRWQCB), 2008, *Screening for Environmental Concerns at Sites with Contaminated Soil and Groundwater*, dated May 2008.

Cal-EPA 1991, *Background Levels of Trace Elements in Southern California Soils, Draft Annual Report*, California Environmental Protection Agency, Contract No. 89-T0081 by University of California, Riverside, California, April 1991 (Agricultural soils).

Cal-EPA 1992, *Background Levels of Trace Elements in Southern California Soils, Draft Annual Report*, California Environmental Protection Agency, Contract No. 89-T0081 by University of California, Riverside, California, June 1992.

Cal-EPA 2012, *Advisory Active Soil Gas Investigations*, California Environmental Protection Agency, Department of Toxic Substances Control, Los Angeles Regional Water Quality Control Board, San Francisco Regional Water Quality Control Board, April 4 2012.

San Francisco Regional Water Quality Control Board Environmental Screening Levels (SFRWQCB ESLs), 2016.

California's Office of environmental Health Hazard Assessment (OEHHA) Screening Levels.

California Department of Toxic Substances Control, Human and Ecological Risk Office (HERO), Human Health Risk Assessment (HHRA) Note 3 (Site Specific Calculations)

USEPA, May 2016, Regional Screening Level Summary Table, Pacific Southwest, Region 9, https://www.epa.gov/risk/regional-screening-levels-rsls-generic-tables-may-2016

Kearney Foundation 1996, *Background Concentrations of Trace and Major Elements in California Soils*, Kearney Foundation of Soil Science, Division of Agriculture and Natural Resources, University of California,

Stantec Consulting Services Inc. (Stantec), 2015, *Phase I Environmental Site Assessment,* Grayson Power Plant, 800 Air Way, Glendale, California 91201, December 16.

Stantec, 2016, *Third Quarter 2015 Groundwater Monitoring and Project Update Report, Former PRC-DESOTO Facility, 5430 San Fernando Road, Glendale*, California 91203, January 14.

**Websites:**

http://geotracker.waterboards.ca.gov/

https://www3.epa.gov/region9/superfund/chromium/

**PHASE II ENVIRONMENTAL SITE ASSESSMENT GRAYSON POWER PLANT, 800 AIR WAY GLENDALE, CALIFORNIA 91201**

FIGURES
July 8, 2016

# FIGURES

Stantec

Project No.: 2057123300

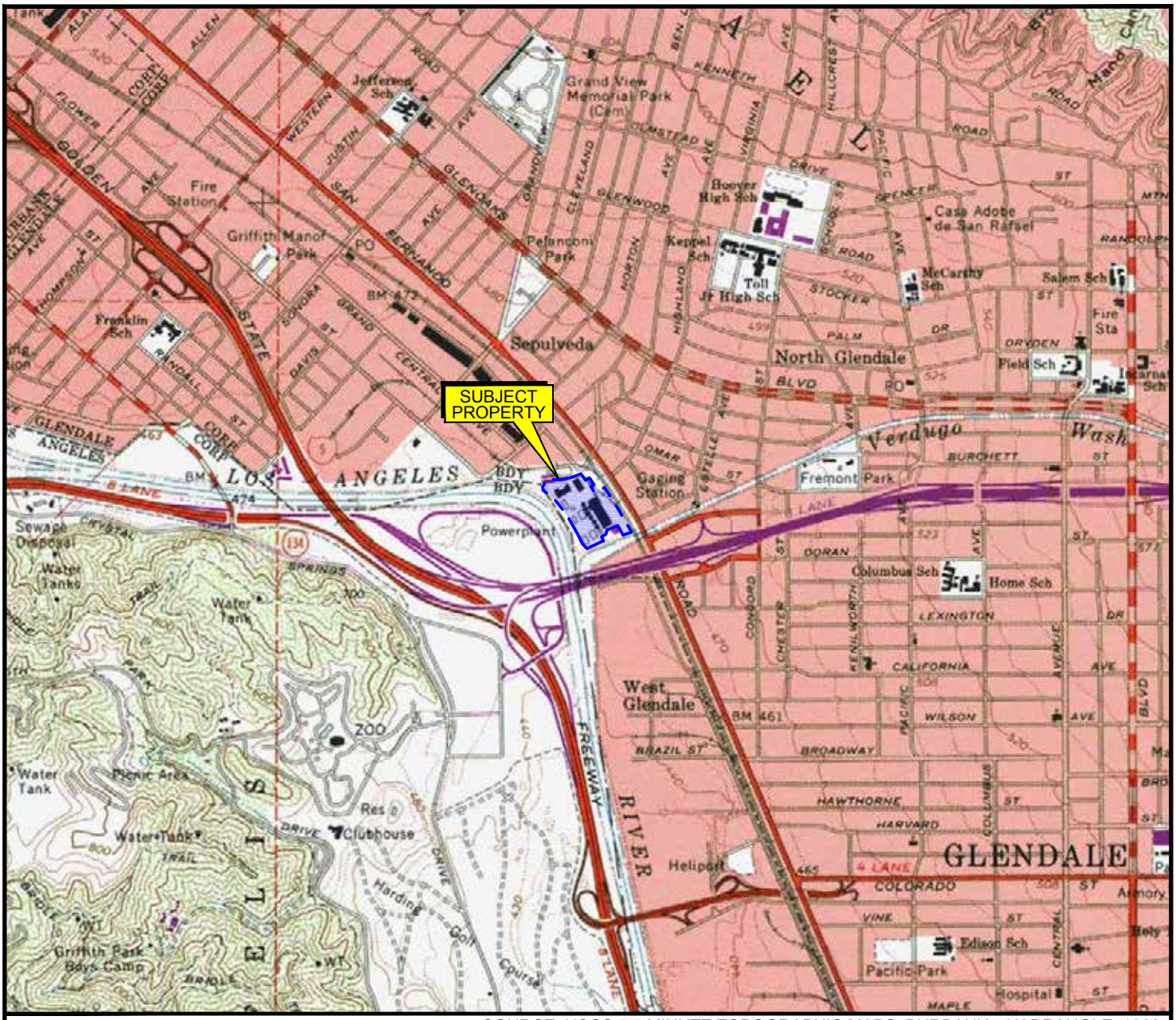


SOURCE: USGS 7.5 MINUTE TOPOGRAPHIC MAPS, BURBANK QUADRANGLE, 1966
PHOTOREVISED, 1994

N

0 2000 4000

APPROXIMATE SCALE (FEET)

Stantec
290 Conejo Ridge Avenue
Thousand Oaks, CA 91361
PHONE: (805) 230-1266 FAX: (805) 230-1277

FOR:
Grayson Power Plant
Phase II ESA
800 Air Way
Glendale, CA 90755

SITE LOCATION MAP

FIGURE: 1

| JOB NUMBER: | DRAWN BY: | CHECKED BY: | APPROVED BY: | DATE: |
|---|---|---|---|---|
| 2057123300.M800-5G | R. Roman | A. Sawant | C. Haase | 12/17/15 |

FILEPATH:E:\2057\active\2057123300\05_report\deliv\cad\figures\20151217_pho_gpp_esa.dwg\TRoman\Dec 18, 2015 at 11:08\Layout: F1

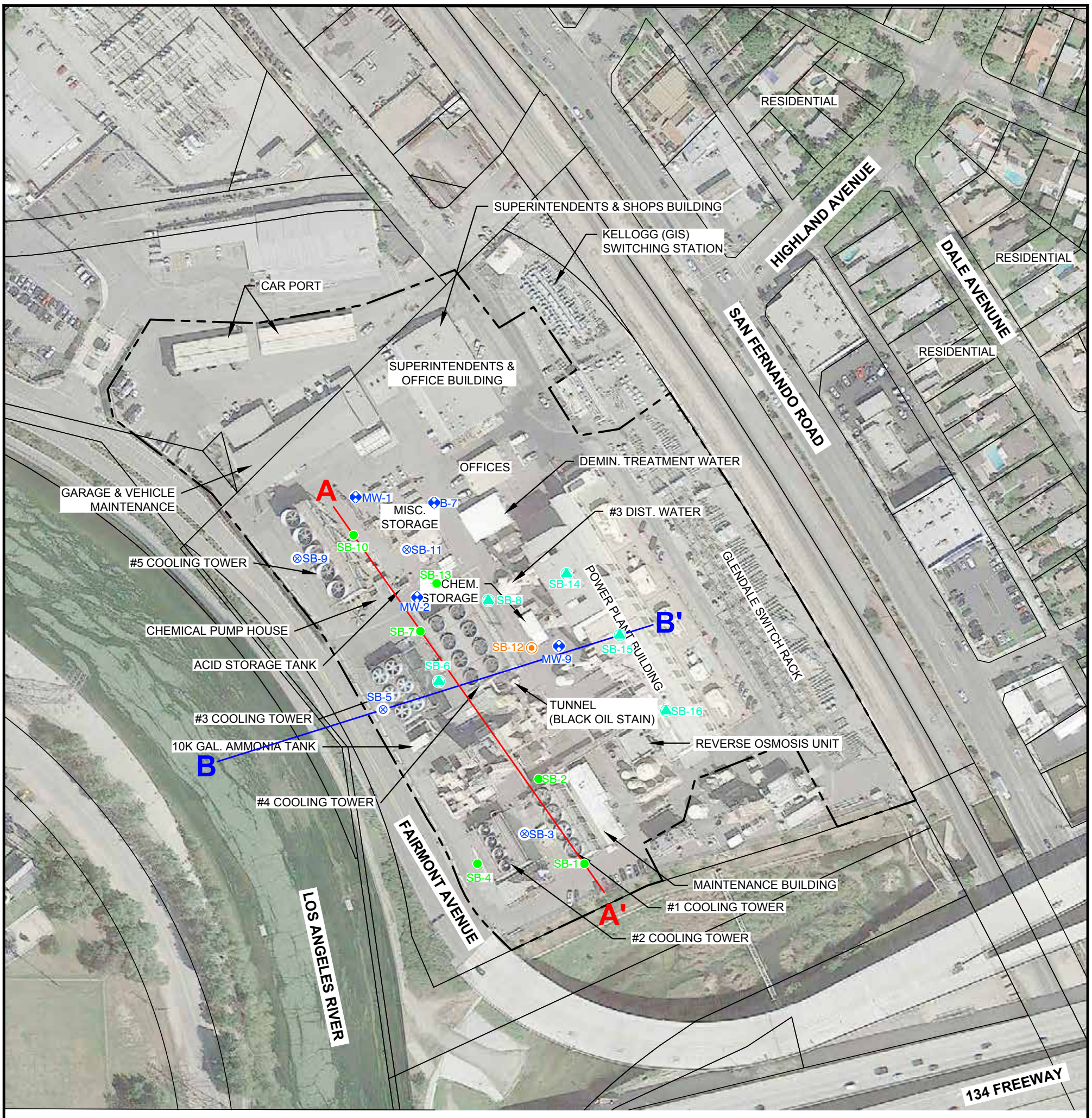


## LEGEND

- APPROXIMATE SUBJECT PROPERTY LINE
- SOIL AND SOIL VAPOR SAMPLING LOCATIONS
- EXISTING GROUNDWATER MONITORING WELLS
- SOIL VAPOR SAMPLING LOCATIONS
- SOIL AND GROUNDWATER SAMPLING LOCATIONS
- SOIL, GROUNDWATER AND SOIL VAPOR SAMPLING LOCATION
- CROSS-SECTION A-A
- CROSS-SECTION B-B

## NOTES:

1. MAP REFERENCES; GOOGLE EARTH PRO AERIAL IMAGE, DATED APRIL 23, 2014. GLENDALE WATER AND POWER, FACILITIES SITE PLAN, SHEET NO. 1, 6095-A, DATED SEPTEMBER 11, 2008.
2. COORDINATE SYSTEM; NAD 83 CALIFORNIA STATE PLANES, ZONE 5 (FT.). NOT A SURVEYED MAP, SITE FEATURES AND LOCATIONS ARE APPROXIMATE.

No warranty is made by Stantec Consulting Services Inc. as to the accuracy, reliability, or completeness of these data. Original data were compiled from various sources. This information may not meet National Map Accuracy Standards. This product was developed electronically, and may be updated without notification. Any reproduction may result in a loss of scale and or information.

N

0 150 300

APPROXIMATE SCALE IN FEET

Stantec
290 Conejo Ridge Avenue
Thousand Oaks, CA 91361
PHONE: (805) 230-1266 FAX: (805) 230-1277

FOR:
GRAYSON POWER PLANT
PHASE II ESA
800 AIR WAY
GLENDALE, CALIFORNIA 91201

**SITE MAP SHOWING CROSS-SECTIONS A-A' AND B-B'**

FIGURE: **2**

| JOB NUMBER: | DRAWN BY: | CHECKED BY: | APPROVED BY: | DATE: |
|---|---|---|---|---|
| 2057123300 | STA/RAR | AS/TS | CH | 06/29/16 |

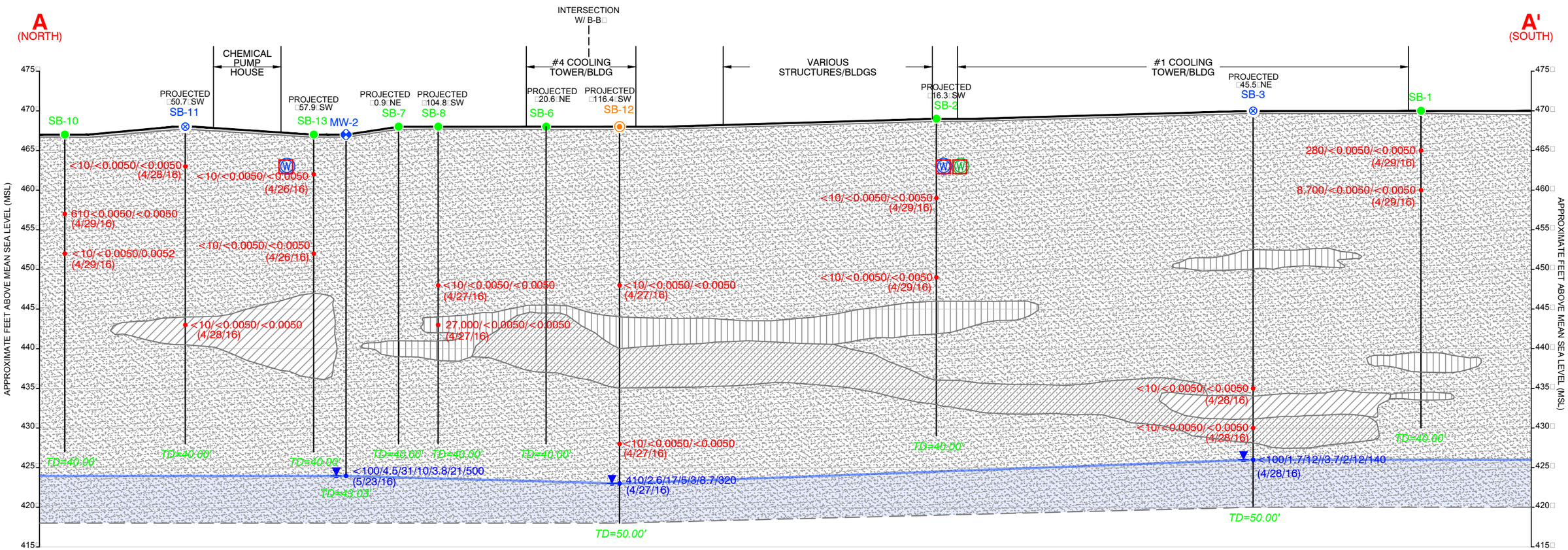


## LEGEND

- SOIL AND SOIL VAPOR SAMPLING LOCATIONS
- EXISTING GROUNDWATER MONITORING WELLS
- SOIL AND GROUNDWATER SAMPLING LOCATIONS
- SOIL, GROUNDWATER AND SOIL VAPOR SAMPLING LOCATION

<10/<0.0050/<0.0050 — SOIL SAMPLE RESULTS IN mg/kg
TPHcc/BENZENE/TCE

<100/4.5/31/10/3.8/21/500 — GROUNDWATER SAMPLE RESULTS IN µg/L & mg/L
TPHcc/1,1-DCA/1,1-DCE/cis-1,2-DCE/CHLOROFORM/PCE/TCE

MW-2 — WELL ID
(5/23/16) — DATE SAMPLES TAKEN
TD=43.03' — TOTAL WELL DEPTH bgs (FEET)

SB-8 — BORING ID
(4/27/16) — DATE SAMPLES TAKEN
TD=40' — TOTAL BORING DEPTH bgs (FEET)

- ASPHALT
- SILT (ML)
- CLAY (CL)
- SAND (SP)
- CLAYEY SAND (SC)
- INTERPRETED SOIL STRATIGRAPHIC BOUNDARY
- POTABLE WATER MAIN LINE
- WELL WATER LINE
- DEPTH TO GROUNDWATER (STATIC)

| | |
|---|---|
| TPHcc | TOTAL PETROLEUM HYDROCARBONS CARBON CHAIN |
| TCE | TRICHLOROETHENE |
| 1,1-DCA | 1,1-DICHLOROETHANE |
| 1,1-DCE | 1,1-DICHLOROETHENE |
| cis 1,2-DCE | cis1,2-DICHLOROETHENE |
| PCE | TETRACHLOROETHENE |
| mg/kg | MILLIGRAMS PER KILOGRAM |
| µg/L | MICROGRAMS PER LITER |
| mg/L | MILLIGRAMS PER LITER |
| bgs | BELOW GROUND SURFACE |

0 50 100
APPROXIMATE HORIZONTAL SCALE IN FEET
APPROXIMATE VERTICAL SCALE 4X IN FEET

No warranty is made by Stantec Consulting Services Inc. as to the accuracy, reliability, or completeness of these data. Original data were compiled from various sources. This information may not meet National Map Accuracy Standards. This product was developed electronically, and may be updated without notification. Any reproduction may result in a loss of scale and or information.

## NOTES:

1. GROUND SURFACE ADJUSTED TO DEPICT RELATIVE ELEVATIONS FROM GOOGLE EARTH PRO.
2. HORIZONTAL EXAGGERATION OF WELLS AND BORINGS DONE FOR CLARITY. FIGURE DOES NOT REFLECT ACTUAL BOREHOLE DIAMETERS.

Stantec
290 Conejo Ridge Avenue
Thousand Oaks, CA 91361
PHONE:(805) 230-1266 FAX:(805) 230-1277

FOR:
GRAYSON POWER PLANT
PHASE II ESA
800 AIR WAY
GLENDALE, CALIFORNIA 91201

**GEOLOGIC CROSS SECTION A - A'**

FIGURE: **3**

| JOB NUMBER: | DRAWN BY: | CHECKED BY: | APPROVED BY: | DATE: |
|---|---|---|---|---|
| 2057123300 | STA/RAR | AS/TS | CH | 06/10/16 |

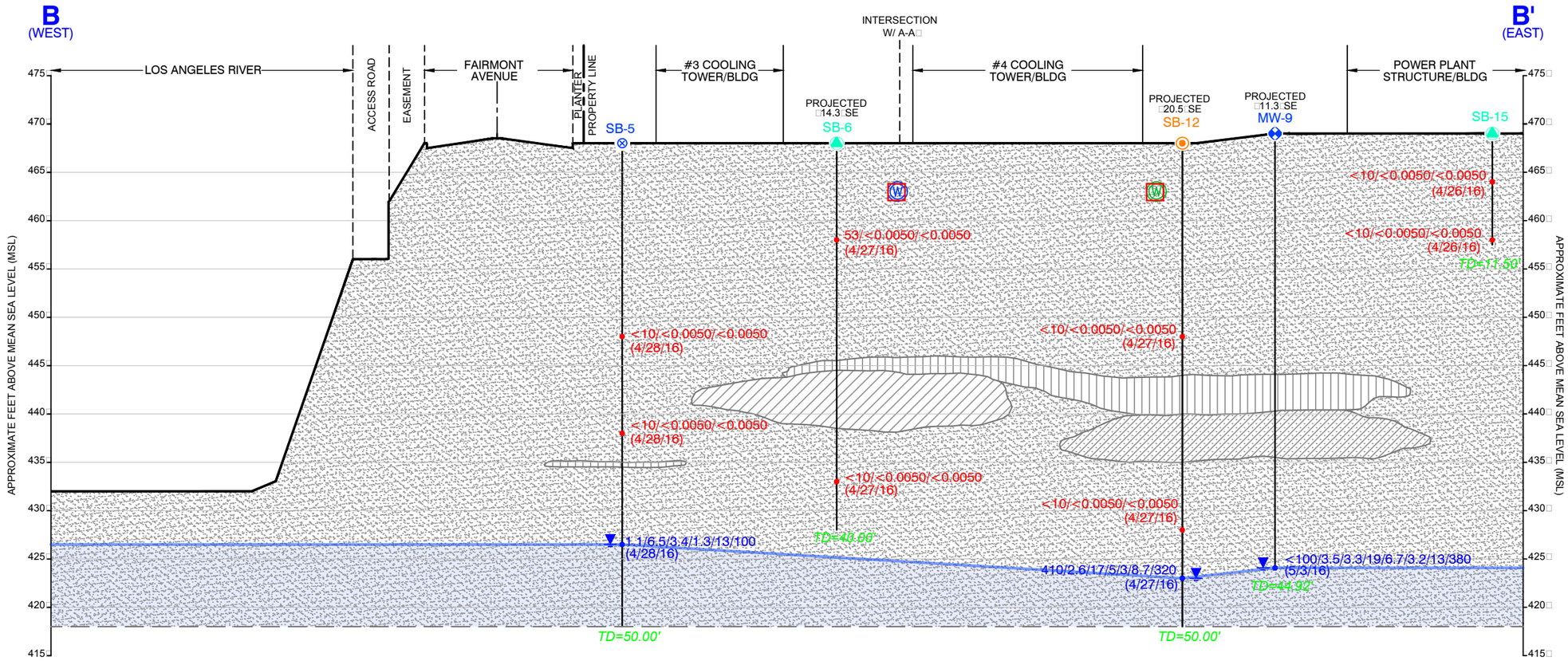


## LEGEND

- EXISTING GROUNDWATER MONITORING WELLS
- SOIL VAPOR SAMPLING LOCATIONS
- SOIL AND GROUNDWATER SAMPLING LOCATIONS
- SOIL, GROUNDWATER AND SOIL VAPOR SAMPLING LOCATION

• <10/<0.0050/<0.0050 — SOIL SAMPLE RESULTS IN mg/kg
TPHcc/BENZENE/TCE

• <100/4.5/31/10/3.8/21/500 — GROUNDWATER SAMPLE RESULTS IN µg/L & mg/L
TPHcc/1,1-DCA/1,1-DCE/cis-1,2-DCE/CHLOROFORM/PCE/TCE

MW-9 (5/3/16) — WELL ID — DATE SAMPLES TAKEN
TD=44.92' — TOTAL WELL DEPTH bgs (FEET)

SB-5 (4/28/16) — BORING ID — DATE SAMPLES TAKEN
TD=50' — TOTAL BORING DEPTH bgs (FEET)

- ASPHALT
- SILT (ML)
- CLAY (CL)
- SAND
- CLAYEY SAND
- INTERPRETED SOIL STRATIGRAPHIC BOUNDARY
- POTABLE WATER MAIN LINE
- WELL WATER LINE
- DEPTH TO GROUNDWATER (STATIC)

| | |
|---|---|
| TPHcc | TOTAL PETROLEUM HYDROCARBONS CARBON CHAIN |
| TCE | TRICHLOROETHENE |
| 1,1-DCA | 1,1-DICHLOROETHANE |
| 1,1-DCE | 1,1-DICHLOROETHENE |
| cis 1,2-DCE | cis1,2-DICHLOROETHENE |
| PCE | TETRACHLOROETHENE |
| mg/kg | MILLIGRAMS PER KILOGRAM |
| µg/L | MICROGRAMS PER LITER |
| mg/L | MILLIGRAMS PER LITER |
| bgs | BELOW GROUND SURFACE |

0 50 100
APPROXIMATE HORIZONTAL SCALE IN FEET
APPROXIMATE VERTICAL SCALE 4X IN FEET

No warranty is made by Stantec Consulting Services Inc. as to the accuracy, reliability, or completeness of these data. Original data were compiled from various sources. This information may not meet National Map Accuracy Standards. This product was developed electronically, and may be updated without notification. Any reproduction may result in a loss of scale and or information.

## NOTES:

1. GROUND SURFACE ADJUSTED TO DEPICT RELATIVE ELEVATIONS FROM GOOGLE EARTH PRO.
2. HORIZONTAL EXAGGERATION OF WELLS AND BORINGS DONE FOR CLARITY. FIGURE DOES NOT REFLECT ACTUAL BOREHOLE DIAMETERS.

Stantec
290 Conejo Ridge Avenue
Thousand Oaks, CA 91361
PHONE:(805) 230-1266 FAX:(805) 230-1277

FOR:
GRAYSON POWER PLANT
PHASE II ESA
800 AIR WAY
GLENDALE, CALIFORNIA 91201

**GEOLOGIC CROSS SECTION B - B'**

FIGURE: **4**

| JOB NUMBER: | DRAWN BY: | CHECKED BY: | APPROVED BY: | DATE: |
|---|---|---|---|---|
| 2057123300 | STA/RAR | AS/TS | CH | 06/10/16 |

## LEGEND

| | |
|---|---|
| — — — — | APPROXIMATE SUBJECT PROPERTY LINE |
| ● | SOIL SAMPLING LOCATIONS ONLY |
| ◆ | EXISTING GROUNDWATER MONITORING WELLS |
| ▲ | SOIL VAPOR SAMPLING SOIL BORING LOCATIONS |
| ⊗ | GROUNDWATER SAMPLING SOIL BORING LOCATIONS |
| ◉ | SOIL, GROUNDWATER AND SOIL VAPOR SAMPLING SOIL BORING LOCATION |
| VOCs | VOLATILE ORGANIC COMPOUNDS |
| DEPTHS | FEET BELOW GROUND SURFACE |
| X | m,p-XYLENES |
| B | BENZENE |
| T | TOLUENE |
| TCE | TRICHLOROETHENE |
| ND | CONSTITUENTS NOT DETECTED AT OR ABOVE THEIR RESPECTIVE LABORATORY REPORTING LIMITS |

ALL RESULTS ARE IN MILLIGRAMS PER KILOGRAM (mg/kg)

## NOTES:

1. MAP REFERENCES; GOOGLE EARTH PRO AERIAL IMAGE, DATED APRIL 23, 2014. GLENDALE WATER AND POWER, FACILITIES SITE PLAN, SHEET NO. 1, 6095-A, DATED SEPTEMBER 11, 2008.
2. COORDINATE SYSTEM; NAD 83 CALIFORNIA STATE PLANES, ZONE 5 (FT.). NOT A SURVEYED MAP, SITE FEATURES AND LOCATIONS ARE APPROXIMATE.

N

0 150 300

APPROXIMATE SCALE IN FEET

No warranty is made by Stantec Consulting Services Inc. as to the accuracy, reliability, or completeness of these data. Original data were compiled from various sources. This information may not meet National Map Accuracy Standards. This product was developed electronically, and may be updated without notification. Any reproduction may result in a loss of scale and or information.

Stantec
290 Conejo Ridge Avenue
Thousand Oaks, CA 91361
PHONE:(805) 230-1266 FAX:(805) 230-1277

FOR:
GRAYSON POWER PLANT
PHASE II ESA
800 AIR WAY
GLENDALE, CALIFORNIA 91201

**SITE MAP WITH SOIL VOCs CONCENTRATIONS**

FIGURE: **5**

| JOB NUMBER: | DRAWN BY: | CHECKED BY: | APPROVED BY: | DATE: |
|---|---|---|---|---|
| 2057123300 | STA | AS | TRS | 06/08/16 |

FILEPATH:C:\Users\asawant\Desktop\Grayson Power Plant\CADD\FIG 3_GRAYSON POWER PLANT_VOCs CONCENTRATION IN SOIL.dwg | Layout Tab: 11x17L | Drafter: asawant | Jun 21, 2016 at 8:57

## LEGEND

- APPROXIMATE SUBJECT PROPERTY LINE
- SOIL SAMPLING LOCATIONS ONLY
- EXISTING GROUNDWATER MONITORING WELLS
- SOIL VAPOR SAMPLING SOIL BORING LOCATIONS
- GROUNDWATER SAMPLING SOIL BORING LOCATIONS
- SOIL, GROUNDWATER AND SOIL VAPOR SAMPLING SOIL BORING LOCATION

TPH — TOTAL PETROLEUM HYDROCARBONS

DEPTHS — FEET BELOW GROUND SURFACE

CONSTITUENTS NOT DETECTED AT OR ABOVE THEIR RESPECTIVE LABORATORY REPORTING LIMITS

ALL RESULTS ARE IN MILLIGRAMS PER KILOGRAM (mg/kg)

## NOTES:

1. MAP REFERENCES; GOOGLE EARTH PRO AERIAL IMAGE, DATED APRIL 23, 2014. GLENDALE WATER AND POWER, FACILITIES SITE PLAN, SHEET NO. 1, 6095-A, DATED SEPTEMBER 11, 2008.
2. COORDINATE SYSTEM; NAD 83 CALIFORNIA STATE PLANES, ZONE 5 (FT.). NOT A SURVEYED MAP, SITE FEATURES AND LOCATIONS ARE APPROXIMATE.

N

0 150 300

APPROXIMATE SCALE IN FEET

No warranty is made by Stantec Consulting Services Inc. as to the accuracy, reliability, or completeness of these data. Original data were compiled from various sources. This information may not meet National Map Accuracy Standards. This product was developed electronically, and may be updated without notification. Any reproduction may result in a loss of scale and or information.

Stantec
290 Conejo Ridge Avenue
Thousand Oaks, CA 91361
PHONE:(805) 230-1266 FAX:(805) 230-1277

FOR:
GRAYSON POWER PLANT
PHASE II ESA
800 AIR WAY
GLENDALE, CALIFORNIA 91201

**SITE MAP WITH SOIL TPH CONCENTRATIONS**

FIGURE: 6

| JOB NUMBER: | DRAWN BY: | CHECKED BY: | APPROVED BY: | DATE: |
|---|---|---|---|---|
| 2057123300 | STA | AS | TRS | 06/03/16 |

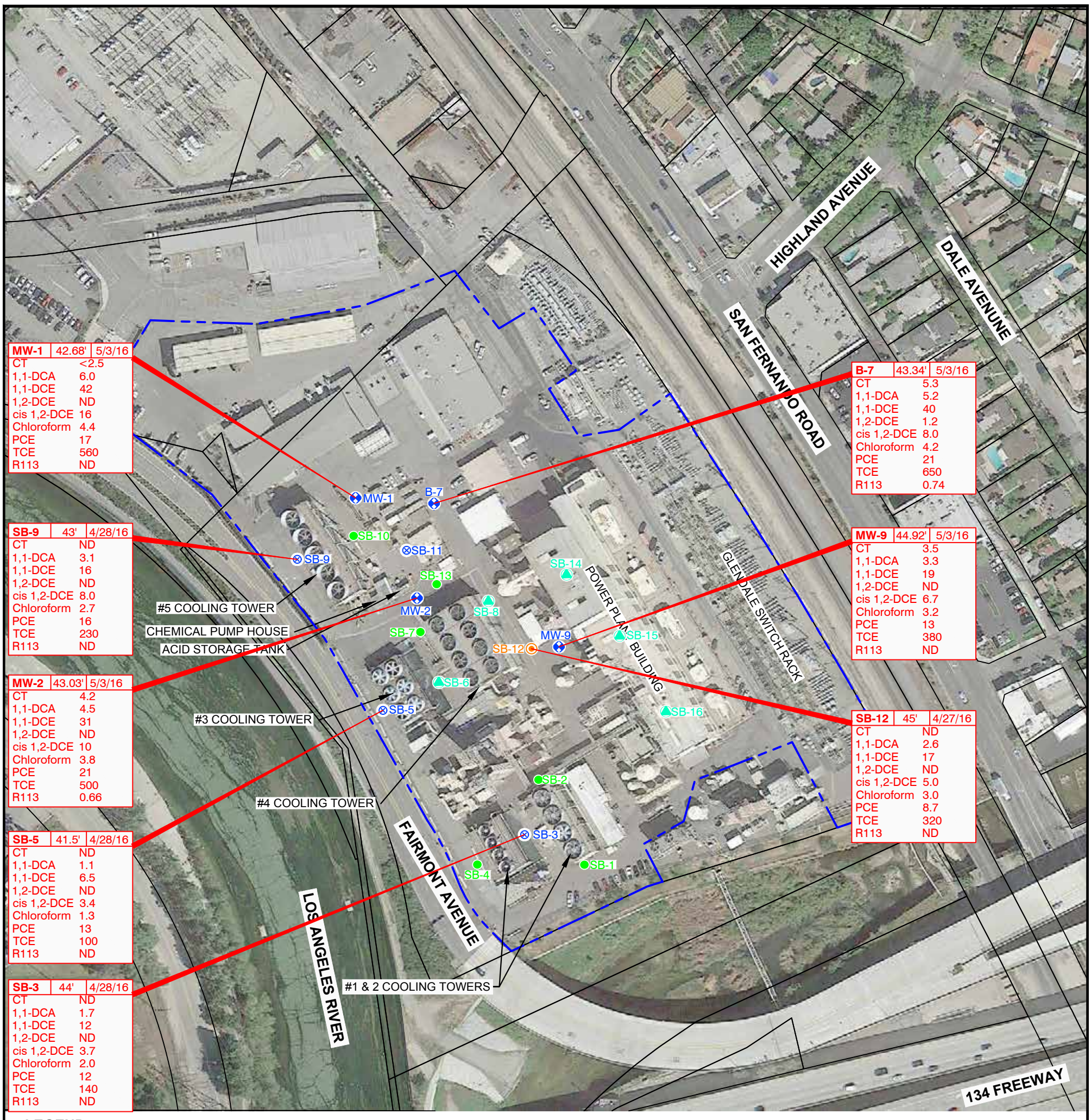


## LEGEND

- APPROXIMATE SUBJECT PROPERTY LINE
- SOIL AND SOIL VAPOR SAMPLING LOCATIONS
- EXISTING GROUNDWATER EXTRACTION WELLS
- SOIL VAPOR SAMPLING LOCATIONS
- SOIL AND GROUNDWATER SAMPLING LOCATIONS
- SOIL, GROUNDWATER AND SOIL VAPOR SAMPLING LOCATION

| | |
|---|---|
| VOCs | VOLATILE ORGANIC COMPOUNDS |
| CT | CARBON TETRACHLORIDE |
| 1,1-DCA | 1,1-DICHLOROETHANE |
| 1,1-DCE | 1,1-DICHLOROETHENE |
| 1,2-DCE | 1,2-DICHLOROETHENE |
| cis 1,2-DCE | cis 1,2-DICHLOROETHENE |
| PCE | TETRACHLOROETHENE |
| TCE | TRICHLOROETHENE |
| R113 | 1,1,2 TRICHLORO-1,2,2-TRIFLUOROETHANE |
| DEPTHS | FEET BELOW GROUND SURFACE (ft bgs) |
| ND | CONSTITUENTS NOT DETECTED AT OR ABOVE THEIR RESPECTIVE LABORATORY REPORTING LIMITS |

ALL RESULTS ARE IN MICROGRAMS PER LITER (ug/L)

## NOTES:

1. MAP REFERENCES; GOOGLE EARTH PRO AERIAL IMAGE, DATED APRIL 23, 2014. GLENDALE WATER AND POWER, FACILITIES SITE PLAN, SHEET NO. 1, 6095-A, DATED SEPTEMBER 11, 2008.
2. COORDINATE SYSTEM; NAD 83 CALIFORNIA STATE PLANES, ZONE 5 (FT.). NOT A SURVEYED MAP, SITE FEATURES AND LOCATIONS ARE APPROXIMATE.

N

0 150 300

APPROXIMATE SCALE IN FEET

No warranty is made by Stantec Consulting Services Inc. as to the accuracy, reliability, or completeness of these data. Original data were compiled from various sources. This information may not meet National Map Accuracy Standards. This product was developed electronically, and may be updated without notification. Any reproduction may result in a loss of scale and or information.

Stantec
290 Conejo Ridge Avenue
Thousand Oaks, CA 91361
PHONE: (805) 230-1266 FAX: (805) 230-1277

FOR:
GRAYSON POWER PLANT
PHASE II ESA
800 AIR WAY
GLENDALE, CALIFORNIA 91201

**SITE MAP WITH GROUNDWATER DETECTED VOCs CONCENTRATIONS**

FIGURE: 7

| JOB NUMBER: | DRAWN BY: | CHECKED BY: | APPROVED BY: | DATE: |
|---|---|---|---|---|
| 2057123300 | STA | AS | TRS | 06/03/16 |

## LEGEND

- APPROXIMATE SUBJECT PROPERTY LINE
- SOIL AND SOIL VAPOR SAMPLING SOIL BORING LOCATIONS
- EXISTING GROUNDWATER MONITORING WELLS
- SOIL VAPOR SAMPLING SOIL BORING LOCATIONS
- SOIL AND GROUNDWATER SAMPLING SOIL BORING LOCATIONS
- SOIL, GROUNDWATER AND SOIL VAPOR SAMPLING SOIL BORING LOCATION

TPH — TOTAL PETROLEUM HYDROCARBONS

DEPTHS — FEET BELOW GROUND SURFACE

□ — CONSTITUENTS NOT DETECTED AT OR ABOVE THEIR RESPECTIVE LABORATORY REPORTING LIMITS

ALL RESULTS ARE IN MILLIGRAMS PER LITER (mg/L)

## NOTES:

1. MAP REFERENCES; GOOGLE EARTH PRO AERIAL IMAGE, DATED APRIL 23, 2014. GLENDALE WATER AND POWER, FACILITIES SITE PLAN, SHEET NO. 1, 6095-A, DATED SEPTEMBER 11, 2008.
2. COORDINATE SYSTEM; NAD 83 CALIFORNIA STATE PLANES, ZONE 5 (FT.). NOT A SURVEYED MAP, SITE FEATURES AND LOCATIONS ARE APPROXIMATE.

No warranty is made by Stantec Consulting Services Inc. as to the accuracy, reliability, or completeness of these data. Original data were compiled from various sources. This information may not meet National Map Accuracy Standards. This product was developed electronically, and may be updated without notification. Any reproduction may result in a loss of scale and or information.

N

0 150 300

APPROXIMATE SCALE IN FEET

Stantec
290 Conejo Ridge Avenue
Thousand Oaks, CA 91361
PHONE: (805) 230-1266 FAX: (805) 230-1277

FOR:
GRAYSON POWER PLANT
PHASE II ESA
800 AIR WAY
GLENDALE, CALIFORNIA 91201

**SITE MAP WITH GROUNDWATER TPH CONCENTRATIONS**

FIGURE: **8**

| JOB NUMBER: | DRAWN BY: | CHECKED BY: | APPROVED BY: | DATE: |
|---|---|---|---|---|
| 2057123300 | STA | AS | TRS | 06/08/16 |

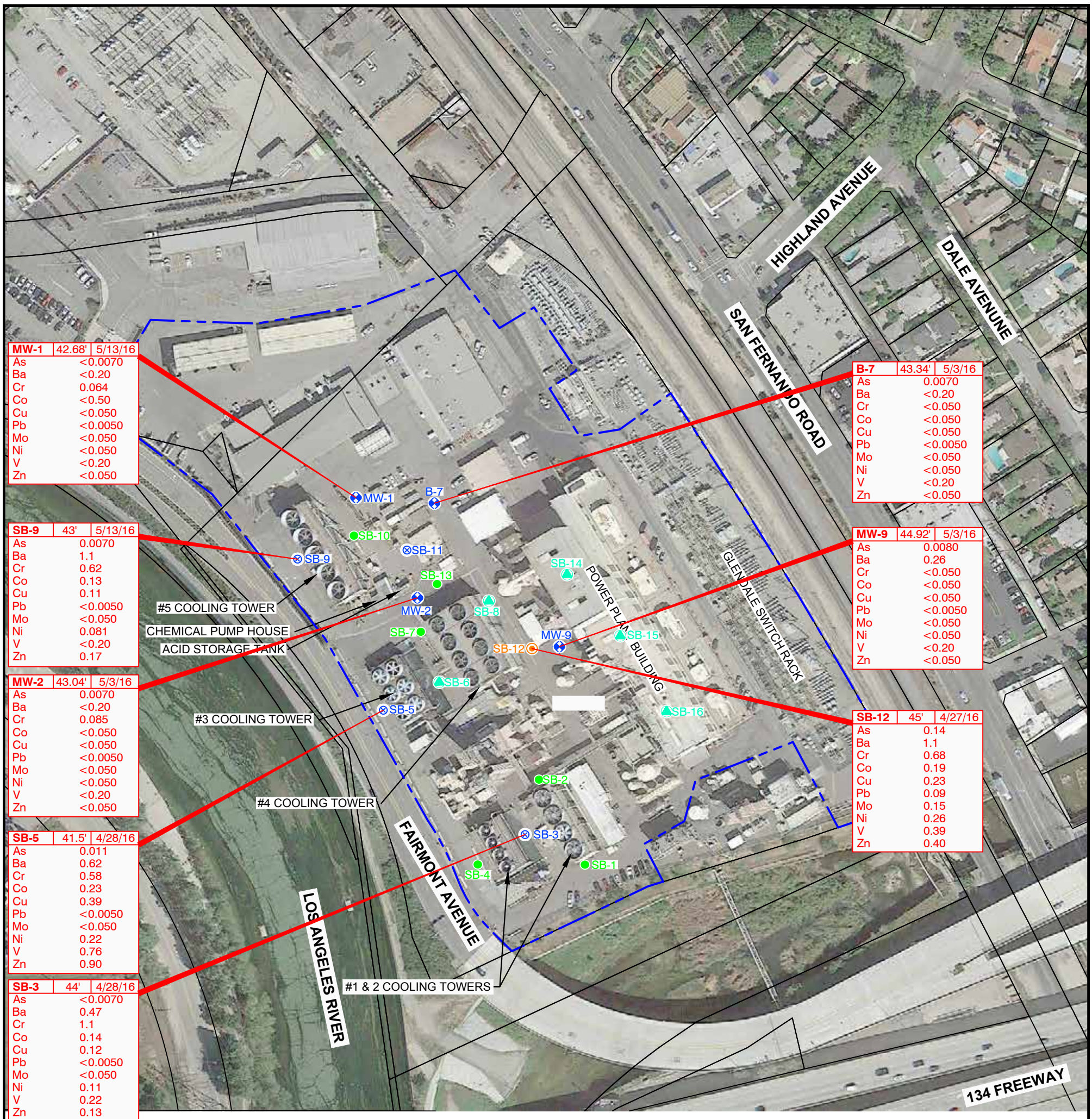


## LEGEND

- APPROXIMATE SUBJECT PROPERTY LINE
- SOIL AND SOIL VAPOR SAMPLING SOIL BORING LOCATIONS
- EXISTING GROUNDWATER MONITORING WELLS
- SOIL VAPOR SAMPLING SOIL BORING LOCATIONS
- SOIL AND GROUNDWATER SAMPLING SOIL BORING LOCATIONS
- SOIL, GROUNDWATER AND SOIL VAPOR SAMPLING SOIL BORING LOCATION

| | |
|---|---|
| As | ARSENIC |
| Ba | BARIUM |
| Cr | CHROMIUM |
| Co | COBALT |
| Cu | COPPER |
| Pb | LEAD |
| Mo | MOLYBDENUM |
| Ni | NICKEL |
| V | VANADIUM |
| Zn | ZINC |
| DEPTHS | FEET BELOW GROUND SURFACE |
| □ | CONSTITUENTS NOT DETECTED AT OR ABOVE THEIR RESPECTIVE LABORATORY REPORTING LIMITS |

ALL RESULTS ARE IN MILLIGRAMS PER LITER (mg/L)

N

0 150 300

APPROXIMATE SCALE IN FEET

## NOTES:

1. MAP REFERENCES; GOOGLE EARTH PRO AERIAL IMAGE, DATED APRIL 23, 2014. GLENDALE WATER AND POWER, FACILITIES SITE PLAN, SHEET NO. 1, 6095-A, DATED SEPTEMBER 11, 2008.
2. COORDINATE SYSTEM; NAD 83 CALIFORNIA STATE PLANES, ZONE 5 (FT.). NOT A SURVEYED MAP, SITE FEATURES AND LOCATIONS ARE APPROXIMATE.

No warranty is made by Stantec Consulting Services Inc. as to the accuracy, reliability, or completeness of these data. Original data were compiled from various sources. This information may not meet National Map Accuracy Standards. This product was developed electronically, and may be updated without notification. Any reproduction may result in a loss of scale and or information.

Stantec
290 Conejo Ridge Avenue
Thousand Oaks, CA 91361
PHONE: (805) 230-1266 FAX: (805) 230-1277

FOR:
GRAYSON POWER PLANT
PHASE II ESA
800 AIR WAY
GLENDALE, CALIFORNIA 91201

**SITE MAP WITH GROUNDWATER DETECTED METAL CONCENTRATIONS**

FIGURE: **9**

| JOB NUMBER: | DRAWN BY: | CHECKED BY: | APPROVED BY: | DATE: |
|---|---|---|---|---|
| 2057123300 | STA | AS | TRS | 06/08/16 |

## LEGEND

- APPROXIMATE SUBJECT PROPERTY LINE
- SOIL AND SOIL VAPOR SAMPLING SOIL BORING LOCATIONS
- EXISTING GROUNDWATER MONITORING WELLS
- SOIL VAPOR SAMPLING SOIL BORING LOCATIONS
- SOIL AND GROUNDWATER SAMPLING SOIL BORING LOCATIONS
- SOIL, GROUNDWATER AND SOIL VAPOR SAMPLING SOIL BORING LOCATION

HC — HEXAVALENT CHROMIUM

DEPTHS — FEET BELOW GROUND SURFACE

□ — CONSTITUENTS NOT DETECTED AT OR ABOVE THEIR RESPECTIVE LABORATORY REPORTING LIMITS

ALL RESULTS ARE IN MILLIGRAMS PER LITER (mg/L)

## NOTES:

1. MAP REFERENCES; GOOGLE EARTH PRO AERIAL IMAGE, DATED APRIL 23, 2014. GLENDALE WATER AND POWER, FACILITIES SITE PLAN, SHEET NO. 1, 6095-A, DATED SEPTEMBER 11, 2008.
2. COORDINATE SYSTEM; NAD 83 CALIFORNIA STATE PLANES, ZONE 5 (FT.). NOT A SURVEYED MAP, SITE FEATURES AND LOCATIONS ARE APPROXIMATE.

No warranty is made by Stantec Consulting Services Inc. as to the accuracy, reliability, or completeness of these data. Original data were compiled from various sources. This information may not meet National Map Accuracy Standards. This product was developed electronically, and may be updated without notification. Any reproduction may result in a loss of scale and or information.

N

0 150 300

APPROXIMATE SCALE IN FEET

Stantec
290 Conejo Ridge Avenue
Thousand Oaks, CA 91361
PHONE:(805) 230-1266 FAX:(805) 230-1277

FOR:
GRAYSON POWER PLANT
PHASE II ESA
800 AIR WAY
GLENDALE, CALIFORNIA 91201

**SITE MAP WITH GROUNDWATER HEXAVALENT CHROMIUM CONCENTRATIONS**

FIGURE: **10**

| JOB NUMBER: | DRAWN BY: | CHECKED BY: | APPROVED BY: | DATE: |
|---|---|---|---|---|
| 2057123300 | STA | AS | TRS | 06/03/16 |

FILEPATH:C:\Users\asawant\Desktop\Grayson Power Plant\CADD\FIG 8_GRAYSON POWER PLANT_HEX CHROMIUM CONCENTRATIONS IN GW.dwg | Layout Tab: 11x17L | Drafter: asawant | Jun 21, 2016 at 9:02

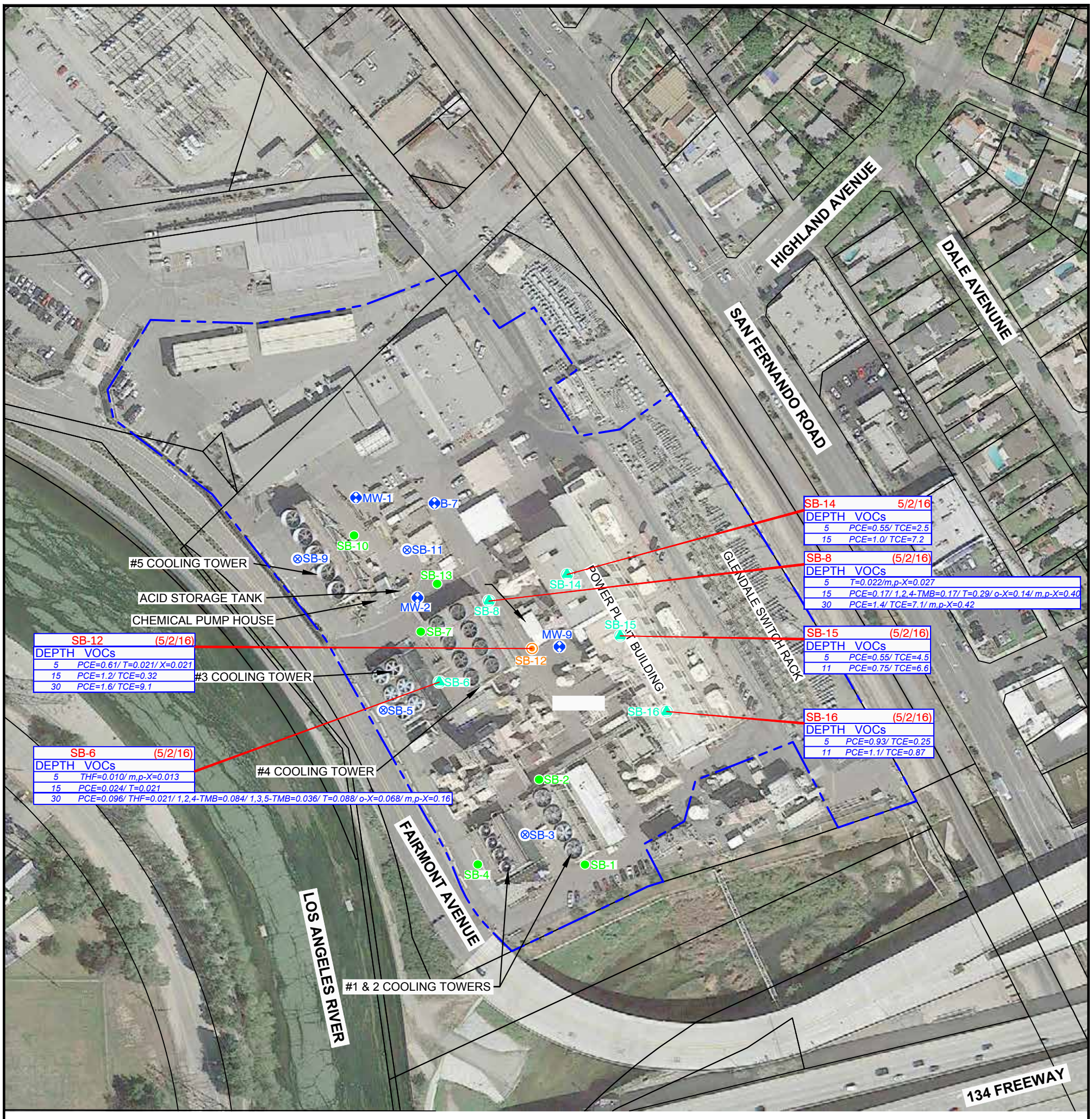


## LEGEND

- APPROXIMATE SUBJECT PROPERTY LINE
- SOIL SAMPLING LOCATIONS ONLY
- EXISTING GROUNDWATER MONITORING WELLS
- SOIL VAPOR SAMPLING SOIL BORING LOCATIONS
- GROUNDWATER SAMPLING SOIL BORING LOCATIONS
- SOIL, GROUNDWATER AND SOIL VAPOR SAMPLING SOIL BORING LOCATION

| | |
|---|---|
| VOCs | VOLATILE ORGANIC COMPOUNDS |
| DEPTHS | FEET BELOW GROUND SURFACE |
| o-X | o-XYLENES |
| m,p-X | m,p-XYLENES |
| T | TOLUENE |
| TCE | TRICHLOROETHENE |
| PCE | TETRACHLOROETHENE |
| THF | TETRAHYDROFURAN |

ALL RESULTS ARE IN MICROGRAMS PER LITER (ug/L)

## NOTES:

1. MAP REFERENCES; GOOGLE EARTH PRO AERIAL IMAGE, DATED APRIL 23, 2014. GLENDALE WATER AND POWER, FACILITIES SITE PLAN, SHEET NO. 1, 6095-A, DATED SEPTEMBER 11, 2008.
2. COORDINATE SYSTEM; NAD 83 CALIFORNIA STATE PLANES, ZONE 5 (FT.). NOT A SURVEYED MAP, SITE FEATURES AND LOCATIONS ARE APPROXIMATE.

N

0 150 300

APPROXIMATE SCALE IN FEET

No warranty is made by Stantec Consulting Services Inc. as to the accuracy, reliability, or completeness of these data. Original data were compiled from various sources. This information may not meet National Map Accuracy Standards. This product was developed electronically, and may be updated without notification. Any reproduction may result in a loss of scale and or information.

Stantec
290 Conejo Ridge Avenue
Thousand Oaks, CA 91361
PHONE: (805) 230-1266 FAX: (805) 230-1277

FOR:
GRAYSON POWER PLANT
PHASE II ESA
800 AIR WAY
GLENDALE, CALIFORNIA 91201

**SITE MAP WITH SOIL VAPOR VOCs CONCENTRATIONS**

FIGURE: **11**

| JOB NUMBER: | DRAWN BY: | CHECKED BY: | APPROVED BY: | DATE: |
|---|---|---|---|---|
| 2057123300 | STA | AS | TRS | 06/08/16 |

FILEPATH:C:\Users\asawant\Desktop\Grayson Power Plant\CADD\FIG 9_GRAYSON POWER PLANT_VOCs CONCENTRATION IN SOIL VAPOR.dwg | Layout Tab: 11x17L | Drafter: asawant | Jun 21, 2016 at 9:03

# TABLES

**TABLE 1**
**Sampling and Analysis Detail**
800 Air Way, Glendale, California

| Boring Number | Location | Drill Method | Total Depth (ft bgs) | Soil Sample Depth (ft bgs) | Soil Vapor Sample Depth (ft bgs) | # Soil Samples Collected | # Soil Samples Collected & Analyzed | # Soil Vapor Samples Collected & Analyzed | # Groundwater Samples Collected & Analyzed | Lab Analyses |
|---|---|---|---|---|---|---|---|---|---|---|
| **Samples Collected By Stantec from May, 2012** | | | | | | | | | | |
| SB-1 | South of Cooling Tower #1 | Geoprobe - direct push | 40 | 5, 10 | -- | 3 | 2 | -- | -- | VOCs, metals, hex chrom & TPHcc (soil) |
| SB-2 | North of Cooling Tower #1 | Geoprobe - direct push | 40 | 10, 20 | -- | 3 | 2 | -- | -- | VOCs, metals, hex chrom & TPHcc (soil) |
| SB-3 | East of Cooling Tower #2 | Geoprobe - direct push | 50 | 35, 40 | -- | 3 | 2 | -- | 1 | VOCs, metals, hex chrom & TPHcc (soil and groundwater) |
| SB-4 | West of Cooling Tower #2 | Geoprobe - direct push | 40 | 10, 20 | -- | 3 | 2 | -- | -- | VOCs, metals, hex chrom & TPHcc (soil) |
| SB-5 | West of Cooling Tower #3 | Geoprobe - direct push | 50 | 30, 40 | -- | 3 | 2 | -- | 1 | VOCs, metals, hex chrom & TPHcc (soil and groundwater) |
| SB-6 | East of Cooling Tower #3 | Geoprobe - direct push | 40 | 10, 35 | 5, 15, 30 | 3 | 2 | 3 | -- | VOCs, metals, hex chrom & TPHcc (soil)<br>VOCs(soil vapor) |
| SB-7 | Northwest corner of Cooling Tower #4 | Geoprobe - direct push | 40 | 10, 15 | -- | 3 | 2 | -- | -- | VOCs, metals, hex chrom & TPHcc (soil) |
| SB-8 | East of Cooling Tower #4 | Geoprobe - direct push | 40 | 20, 25 | 5, 15, 30 | 3 | 2 | 3 | -- | VOCs, metals, hex chrom & TPHcc (soil)<br>VOCs (soil vapor) |
| SB-9 | West of Cooling Tower #5 | Geoprobe - direct push | 50 | 5, 10 | -- | 3 | 2 | -- | 1 | VOCs, metals, hex chrom & TPHcc (soil and groundwater) |
| SB-10 | East of Cooling Tower #5 | Geoprobe - direct push | 40 | 10, 15 | -- | 3 | 2 | -- | -- | VOCs, metals, hex chrom & TPHcc (soil) |
| SB-11 | West of Miscellaneous Storage Area | Geoprobe - direct push | 40 | 5, 35 | -- | 3 | 2 | -- | -- | VOCs, metals, hex chrom & TPHcc (soil) |
| SB-12 | West of Power Plant Building | Geoprobe - direct push | 50 | 20, 40 | -- | 3 | 2 | -- | 1 | VOCs, metals, hex chrom & TPHcc (soil and groundwater) |
| SB-13 | Underground Tunnel | Geoprobe - direct push | 40 | 5, 15 | -- | 3 | 2 | -- | -- | VOCs, metals, hex chrom & TPHcc (soil) |
| SB-14 | North of Power Plant Building | Geoprobe - direct push | 15 | 5, 15 | 5,15 | 3 | 2 | 2 | -- | VOCs, metals, hex chrom & TPHcc (soil)<br>VOCs (soil vapor) |
| SB-15 | Center of Power Plant Building | Geoprobe - direct push | 11.5 | 5, 11 | 5,11 | 3 | 2 | 2 | -- | VOCs, metals, hex chrom & TPHcc (soil)<br>VOCs (soil vapor) |
| SB-16 | South of Power Plant Building | Geoprobe - direct push | 11.5 | 5, 11 | 5,11 | 3 | 2 | 2 | -- | VOCs, metals, hex chrom & TPHcc (soil)<br>VOCs (soil vapor) |

**Notes:**
VOCs = Volatile Organic Compounds by EPA Method 8260B (soil, groundwater) and by TO-15 (soil vapor)
TPHcc = Total Petroleum Hydrocarbons Carbon Chain Characterization by EPA Method 8015M
SB = Soil Boring
Metals = Title 22 Metals EPA Method 6010B
ft bgs = feet below ground surface

**TABLE 2**
**Soil Analytical Results - Volatile Organic Compounds (VOCs)**
800 Air Way, Glendale, California

| Boring Number | Sample Depth (ft bgs) | Sample Number | Sample Date | 8260B (mg/kg) | | | | | |
|---|---|---|---|---|---|---|---|---|---|
| | | | | Acetone | Benzene | Toluene | m,p-Xylenes | TCE | Other VOCs |
| SB-1 | 5 | SB-1-5 | 4/29/16 | ND | ND | ND | ND | ND | ND |
| | 10 | SB-1-10 | | ND | ND | ND | ND | ND | ND |
| SB-2 | 10 | SB-2-10 | 4/29/16 | ND | ND | ND | ND | ND | ND |
| | 20 | SB-2-20 | | ND | ND | ND | ND | ND | ND |
| SB-3 | 35 | SB-3-35 | 4/28/16 | ND | ND | ND | ND | ND | ND |
| | 40 | SB-3-40 | | ND | ND | ND | **0.0024** | ND | ND |
| SB-4 | 10 | SB-4-10 | 4/29/16 | ND | ND | ND | ND | ND | ND |
| | 20 | SB-4-20 | | ND | ND | ND | ND | ND | ND |
| SB-5 | 20 | SB-5-20 | 4/28/16 | ND | ND | ND | ND | ND | ND |
| | 30 | SB-5-30 | | ND | ND | ND | ND | ND | ND |
| SB-6 | 10 | SB-6-10 | 4/27/16 | ND | ND | ND | ND | ND | ND |
| | 35 | SB-6-35 | | ND | ND | ND | ND | ND | ND |
| SB-7 | 10 | SB-7-10 | 4/27/16 | ND | ND | ND | ND | ND | ND |
| | 15 | SB-7-15 | | ND | ND | ND | ND | ND | ND |
| SB-8 | 20 | SB-8-20 | 4/27/16 | ND | ND | ND | ND | ND | ND |
| | 25 | SB-8-25 | | ND | ND | ND | ND | ND | ND |
| SB-9 | 5 | SB-9-5 | 4/28/16 | ND | **0.0040** | **0.0021** | ND | **0.0064** | ND |
| | 10 | SB-9-10 | | ND | **0.0098** | **0.0067** | **0.0030** | **0.0052** | ND |
| SB-10 | 10 | SB-10-10 | 4/29/16 | ND | ND | ND | ND | ND | ND |
| | 15 | SB-10-15 | | **0.29** | ND | ND | ND | **0.0052** | ND |
| SB-11 | 5 | SB-11-5 | 4/28/16 | ND | ND | ND | ND | ND | ND |
| | 35 | SB-11-35 | | ND | ND | ND | ND | ND | ND |
| SB-12 | 20 | SB-12-20 | 4/27/16 | ND | ND | ND | ND | ND | ND |
| | 40 | SB-12-40 | | ND | ND | ND | ND | ND | ND |
| SB-13 | 5 | SB-13-5 | 4/29/16 | ND | ND | ND | ND | ND | ND |
| | 15 | SB-13-15 | | ND | ND | ND | ND | ND | ND |
| SB-14 | 5 | SB-14-5 | 4/26/16 | ND | ND | ND | ND | ND | ND |
| | 15 | SB-14-15 | | ND | ND | ND | ND | ND | ND |
| SB-15 | 5 | SB-15-5 | 4/26/16 | ND | ND | ND | ND | ND | ND |
| | 11 | SB-15-11 | | ND | ND | ND | ND | ND | ND |
| SB-16 | 5 | SB-16-5 | 4/26/16 | ND | ND | ND | ND | ND | ND |
| | 11 | SB-16-11 | | ND | ND | ND | ND | ND | ND |
| **USEPA RSL, Residential Soil** | | | | **61,000** | **1.2** | **4,900** | **1,110** | **0.94** | **--** |
| **USEPA RSL, Industrial Soil** | | | | **670,000** | **5.1** | **47,000** | **4,800** | **6.0** | **--** |
| **SFRWQCB ESL** | | | | **0.50** | **0.044** | **2.90** | **2.3** | **--** | **--** |
| **OEHHA, Residential Scenario** | | | | **--** | **--** | **--** | **--** | **--** | **--** |
| **OEHHA, Industrial Scenario** | | | | **--** | **--** | **--** | **--** | **--** | **--** |

**Notes:**

ND = Constituents not detected at or above their respective laboratory method reporting limit as reported in Appendix D

mg/kg = milligrams per kilogram

ft bgs = feet below ground surface

USEPA RSL = United States Environmental Protection Agency Regional Screening Level (May 2016)

**Blue** = Exceeds USEPA RSL, Residential Soil

**Red** = Exceeds USEPA RSL, Industrial Soil

SFRWQCB ESLs = San Francisco Regional Water Quality Control Board Environmental Screening Levels - Tier 1

= Exceeds ESLs

NA = Not applicable

-- = Not Established

OEHHA Screening Levels = Office of Environmental Health Hazard Assessment Screening Levels

= Exceeds OEHHA Screening Levels (Residential)

= Exceeds OEHHA Screening Levels (Industrial)

**TABLE 3**
**Soil Analytical Results - Total Petroleum Hydrocarbons (TPH)**
800 Air Way, Glendale, California

| Boring Number | Sample Depth (ft bgs) | Sample Number | Sample Date | EPA 8015B(M) (mg/kg) | | | | | | | | | | | | | | | | |
|---|---|---|---|---|---|---|---|---|---|---|---|---|---|---|---|---|---|---|---|---|
| | | | | C6-C8 | C8-C10 | C10-C12 | C12-C14 | C14-C16 | C16-C18 | C18-C20 | C20-C22 | C22-C24 | C24-C26 | C26-C28 | C28-C32 | C32-C34 | C34-C36 | C36-C40 | C40-C44 | TPH (C6-C44) |
| **SB-1** | 5 | SB-1-5 | 4/29/16 | <1.0 | <1.0 | <1.0 | <1.0 | <1.0 | **2.6** | **5.6** | **9.6** | **18** | **18** | **33** | **96** | **26** | **23** | **37** | **11** | **280** |
| | 10 | SB-1-10 | | <10 | <10 | <10 | **36** | **170** | **310** | **440** | **620** | **800** | **1,000** | **1,200** | **2,500** | **640** | **280** | **440** | **270** | **8,700** |
| **SB-2** | 10 | SB-2-10 | 4/29/16 | <1.0 | <1.0 | <1.0 | <1.0 | <1.0 | <1.0 | <1.0 | <1.0 | <1.0 | <1.0 | <1.0 | <1.0 | <1.0 | <1.0 | <1.0 | <1.0 | <10 |
| | 20 | SB-2-20 | | <1.0 | **2.7** | <1.0 | <1.0 | **1.1** | <1.0 | <1.0 | <1.0 | <1.0 | <1.0 | **1.8** | <1.0 | <1.0 | <1.0 | <1.0 | <1.0 | <10 |
| **SB-3** | 35 | SB-3-35 | 4/28/16 | <1.0 | <1.0 | <1.0 | <1.0 | **3.2** | <1.0 | <1.0 | <1.0 | <1.0 | <1.0 | <1.0 | <1.0 | <1.0 | <1.0 | <1.0 | <1.0 | <10 |
| | 40 | SB-3-40 | | <1.0 | <1.0 | <1.0 | <1.0 | **2.1** | <1.0 | <1.0 | <1.0 | <1.0 | <1.0 | <1.0 | <1.0 | <1.0 | <1.0 | <1.0 | <1.0 | <10 |
| **SB-4** | 10 | SB-4-10 | 4/29/16 | <1.0 | <1.0 | <1.0 | <1.0 | <1.0 | <1.0 | <1.0 | <1.0 | <1.0 | <1.0 | <1.0 | **1.0** | <1.0 | <1.0 | <1.0 | <1.0 | <10 |
| | 20 | SB-4-20 | | <1.0 | <1.0 | <1.0 | <1.0 | <1.0 | <1.0 | <1.0 | <1.0 | <1.0 | <1.0 | <1.0 | <1.0 | <1.0 | <1.0 | <1.0 | <1.0 | <10 |
| **SB-5** | 20 | SB-5-20 | 4/28/16 | <1.0 | <1.0 | <1.0 | <1.0 | **2.6** | <1.0 | <1.0 | <1.0 | <1.0 | <1.0 | **1.1** | **2.7** | **1.1** | <1.0 | **1.4** | <1.0 | **10** |
| | 30 | SB-5-30 | | <1.0 | <1.0 | <1.0 | <1.0 | <1.0 | <1.0 | <1.0 | <1.0 | <1.0 | <1.0 | <1.0 | <1.0 | <1.0 | <1.0 | <1.0 | <1.0 | <10 |
| **SB-6** | 10 | SB-6-10 | 4/27/16 | <1.0 | <1.0 | <1.0 | <1.0 | <1.0 | <1.0 | <1.0 | **1.2** | **1.3** | **2.5** | **4.6** | **13** | **5.4** | **5.8** | **11** | **7.2** | **53** |
| | 35 | SB-6-35 | | <1.0 | <1.0 | **1.2** | <1.0 | **2.9** | <1.0 | <1.0 | <1.0 | <1.0 | <1.0 | **1.5** | <1.0 | <1.0 | <1.0 | <1.0 | <1.0 | <10 |
| **SB-7** | 10 | SB-7-10 | 4/27/16 | <1.0 | <1.0 | **1.1** | <1.0 | **4.4** | <1.0 | <1.0 | <1.0 | <1.0 | **1.0** | <1.0 | **1.0** | <1.0 | <1.0 | <1.0 | <1.0 | <10 |
| | 15 | SB-7-15 | | <1.0 | <1.0 | <1.0 | <1.0 | **2.1** | **3.8** | **6.2** | **13** | **14** | **18** | **20** | **39** | **16** | **14** | **21** | **12** | **180** |
| **SB-8** | 20 | SB-8-20 | 4/27/16 | <1.0 | <1.0 | <1.0 | <1.0 | **1.9** | **1.7** | <1.0 | <1.0 | <1.0 | <1.0 | <1.0 | **1.4** | <1.0 | <1.0 | <1.0 | <1.0 | <10 |
| | 25 | SB-8-25 | | <100 | <100 | **220** | **680** | **1,200** | **1,200** | **1,300** | **2,200** | **2,500** | **2,600** | **3,100** | **5,400** | **2,100** | **1,500** | **1,800** | **1,000** | **27,000** |
| **SB-9** | 5 | SB-9-5 | 4/28/16 | <1.0 | <1.0 | **1.4** | <1.0 | <1.0 | <1.0 | <1.0 | <1.0 | <1.0 | **1.0** | **2.3** | **5.0** | **3.1** | **2.1** | **5.4** | <1.0 | **20** |
| | 10 | SB-9-10 | | <1.0 | <1.0 | <1.0 | <1.0 | <1.0 | <1.0 | <1.0 | <1.0 | <1.0 | <1.0 | <1.0 | **1.2** | <1.0 | <1.0 | <1.0 | <1.0 | <10 |
| **SB-10** | 10 | SB-10-10 | 4/29/16 | <5.0 | <5.0 | <5.0 | <5.0 | <5.0 | <5.0 | **13** | **24** | **49** | **62** | **80** | **200** | **76** | **40** | **48** | **20** | **610** |
| | 15 | SB-10-15 | | <1.0 | **1.6** | **1.3** | **3.0** | <1.0 | <1.0 | <1.0 | <1.0 | <1.0 | <1.0 | <1.0 | <1.0 | <1.0 | <1.0 | <1.0 | <1.0 | <10 |
| **SB-11** | 5 | SB-11-5 | 4/28/16 | <1.0 | <1.0 | <1.0 | <1.0 | <1.0 | <1.0 | <1.0 | <1.0 | <1.0 | <1.0 | **1.2** | **3.3** | **1.5** | **1.0** | **2.9** | <1.0 | <10 |
| | 35 | SB-11-35 | | <1.0 | <1.0 | <1.0 | **1.2** | **2.1** | <1.0 | <1.0 | <1.0 | <1.0 | <1.0 | **2.3** | **1.2** | <1.0 | <1.0 | <1.0 | <1.0 | <10 |
| **SB-12** | 20 | SB-12-20 | 4/27/16 | <1.0 | <1.0 | <1.0 | <1.0 | <1.0 | <1.0 | <1.0 | <1.0 | <1.0 | <1.0 | **1.1** | <1.0 | <1.0 | <1.0 | <1.0 | <1.0 | <10 |
| | 40 | SB-12-40 | | <1.0 | <1.0 | <1.0 | <1.0 | <1.0 | <1.0 | <1.0 | <1.0 | <1.0 | <1.0 | **3.3** | **1.8** | <1.0 | <1.0 | <1.0 | <1.0 | <10 |
| **SB-13** | 5 | SB-13-5 | 4/29/16 | <1.0 | **1.0** | <1.0 | <1.0 | <1.0 | <1.0 | <1.0 | <1.0 | <1.0 | <1.0 | <1.0 | <1.0 | <1.0 | <1.0 | <1.0 | <1.0 | <10 |
| | 15 | SB-13-15 | | <1.0 | <1.0 | <1.0 | <1.0 | **1.4** | <1.0 | <1.0 | <1.0 | <1.0 | <1.0 | <1.0 | <1.0 | <1.0 | <1.0 | <1.0 | <1.0 | <10 |
| **SB-14** | 5 | SB-14-5 | 4/26/16 | <1.0 | <1.0 | <1.0 | <1.0 | <1.0 | <1.0 | <1.0 | <1.0 | <1.0 | <1.0 | <1.0 | <1.0 | <1.0 | <1.0 | <1.0 | <1.0 | <10 |
| | 15 | SB-14-15 | | <1.0 | <1.0 | <1.0 | <1.0 | <1.0 | <1.0 | <1.0 | <1.0 | <1.0 | <1.0 | <1.0 | <1.0 | <1.0 | <1.0 | <1.0 | <1.0 | <10 |
| **SB-15** | 5 | SB-15-5 | 4/26/16 | <1.0 | <1.0 | <1.0 | <1.0 | <1.0 | <1.0 | <1.0 | <1.0 | <1.0 | <1.0 | <1.0 | <1.0 | <1.0 | <1.0 | <1.0 | <1.0 | <10 |
| | 11 | SB-15-11 | | <1.0 | <1.0 | <1.0 | <1.0 | <1.0 | <1.0 | <1.0 | <1.0 | <1.0 | <1.0 | <1.0 | <1.0 | <1.0 | <1.0 | <1.0 | <1.0 | <10 |
| **SB-16** | 5 | SB-16-5 | 4/26/16 | <1.0 | <1.0 | <1.0 | <1.0 | <1.0 | <1.0 | <1.0 | <1.0 | <1.0 | <1.0 | <1.0 | <1.0 | <1.0 | <1.0 | <1.0 | <1.0 | <10 |
| | 11 | SB-16-11 | | <1.0 | <1.0 | <1.0 | <1.0 | <1.0 | <1.0 | <1.0 | <1.0 | <1.0 | <1.0 | <1.0 | <1.0 | <1.0 | <1.0 | <1.0 | <1.0 | <10 |

**Notes:**
TPHcc = Total Petroleum Hydrocarbon Carbon Chain Characterization (C6 - C44)
mg/kg = milligrams per kilogram
ft bgs = feet below ground surface
ND = Constituents not detected at or above their respective laboratory method reporting limit as reported in Appendix D

**TABLE 4**
**Soil Analytical Results - CAM Metals**
800 Air Way, Glendale, California

| Boring Number | Sample Number | Sample Depth (ft bgs) | Sample Date | 6010B (mg/kg) | | | | | | | | | | | | | | | | 7471A (mg/kg) |
|---|---|---|---|---|---|---|---|---|---|---|---|---|---|---|---|---|---|---|---|---|
| | | | | Antimony | Arsenic | Barium | Berylium | Cadmium | Chromium | Cobalt | Copper | Lead | Molybdenum | Nickel | Selenium | Silver | Thallium | Vanadium | Zinc | Mercury |
| SB-1 | SB-1-1 | surface | 4/29/16 | <10 | 1.4 | 90 | <1.0 | <1.0 | 12 | 11 | 30 | 25 | <5.0 | 12 | <0.50 | <1.0 | <5.0 | 37 | 200 | 0.110 |
| SB-2 | SB-2-1 | surface | 4/29/16 | <10 | 1.2 | 48 | <1.0 | <1.0 | 11 | 13 | 4.2 | <3.0 | <5.0 | 7.1 | <0.50 | <1.0 | <5.0 | 68 | 90 | 0.020 |
| SB-3 | SB-3-1 | surface | 4/28/16 | <10 | 11 | 190 | <1.0 | <1.0 | 25 | 15 | 36 | 9.8 | <5.0 | 20 | <0.50 | <1.0 | <5.0 | 69 | 94 | 0.021 |
| SB-4 | SB-4-1 | surface | 4/29/16 | <10 | 0.60 | 180 | <1.0 | <1.0 | 10 | 13 | 19 | 4.0 | <5.0 | 7.6 | <0.50 | <1.0 | <5.0 | 60 | 77 | 0.021 |
| SB-5 | SB-5-1 | surface | 4/28/16 | <10 | 2.3 | 130 | <1.0 | <1.0 | 13 | 9.8 | 16 | 9.2 | <5.0 | 8.6 | <0.50 | <1.0 | <5.0 | 48 | 83 | 0.083 |
| SB-6 | SB-6-1 | surface | 4/27/16 | <10 | 4.4 | 110 | <1.0 | 3.8 | 15 | 8.2 | 41 | 220 | <5.0 | 9.2 | <0.50 | <1.0 | <5.0 | 43 | 290 | 0.310 |
| SB-7 | SB-7-1 | surface | 4/27/16 | <10 | 2.5 | 140 | <1.0 | <1.0 | 30 | 11 | 29 | 49 | <5.0 | 13 | <0.50 | <1.0 | <5.0 | 53 | 170 | 0.080 |
| SB-8 | SB-8-1 | surface | 4/27/16 | <10 | 6.3 | 130 | <1.0 | <1.0 | 22 | 9.8 | 27 | 27 | <5.0 | 26 | <0.50 | <1.0 | <5.0 | 51 | 120 | 0.083 |
| SB-9 | SB-9-1 | surface | 4/28/16 | <10 | 1.8 | 97 | <1.0 | <1.0 | 11 | 7.8 | 13 | 7.5 | <5.0 | 7.6 | <0.50 | <1.0 | <5.0 | 38 | 56 | 0.063 |
| SB-10 | SB-10-1 | surface | 4/29/16 | <10 | 3.6 | 140 | <1.0 | <1.0 | 16 | 13 | 18 | 7.1 | <5.0 | 12 | <0.50 | <1.0 | <5.0 | 58 | 91 | 0.086 |
| SB-11 | SB-11-1 | surface | 4/28/16 | <10 | 3.0 | 110 | <1.0 | <1.0 | 13 | 10 | 17 | 11 | <5.0 | 9.9 | <0.50 | <1.0 | <5.0 | 49 | 76 | 0.088 |
| SB-12 | SB-12-1 | surface | 4/26/16 | <10 | 3.0 | 230 | <1.0 | <1.0 | 12 | 8.8 | 68 | 170 | <5.0 | 17 | <0.50 | <1.0 | <5.0 | 42 | 260 | 0.120 |
| SB-13 | SB-13-1 | surface | 4/29/16 | <10 | 1.5 | 96 | <1.0 | <1.0 | 9.3 | 6.6 | 18 | 56 | <5.0 | 6.6 | <0.50 | <1.0 | <5.0 | 35 | 130 | 0.080 |
| SB-14 | SB-14-1 | surface | 4/26/16 | <10 | 3.6 | 130 | <1.0 | <1.0 | 15 | 11 | 21 | 6.3 | <5.0 | 10 | <0.50 | <1.0 | <5.0 | 57 | 72 | 0.120 |
| SB-15 | SB-15-1 | surface | 4/26/16 | <10 | 1.6 | 98 | <1.0 | <1.0 | 11 | 8.0 | 12 | <3.0 | <5.0 | 6.9 | <0.50 | <1.0 | <5.0 | 44 | 53 | 0.078 |
| SB-16 | SB-16-1 | surface | 4/26/16 | <10 | 1.8 | 80 | <1.0 | <1.0 | 9.4 | 7.2 | 11 | <3.0 | <5.0 | 6.3 | <0.50 | <1.0 | <5.0 | 37 | 62 | 0.042 |
| USEPA RSL, Residential Soil | | | | 31 | 0.68 | 15,000 | 160 | 71 | -- | 23 | 3,100 | 400 | 390 | 670 | 390 | 390 | 0.78 | 390 | 2,300 | 11 |
| USEPA RSL, Industrial Soil | | | | 470 | 3.0 | 220,000 | 2,300 | 980 | -- | 350 | 47,000 | 800 | 5,800 | 8,100 | 5,800 | 5,800 | 12 | 5,800 | 35,000 | 46 |
| ESL - Residential Land Use | | | | 31 | 0.67 | 3,000 | 42 | 39 | -- | 23 | 3,100 | 80 | 390 | 86 | 390 | 390 | 0.78 | 390 | 23,000 | 13 |
| ESL - Industrial Land Use | | | | 470 | 0.31 | 220,000 | 2,200 | 580 | -- | 350 | 47,000 | 320 | 5,800 | 11,000 | 5,800 | 5,800 | 12 | 5800 | 350,000 | 190 |
| OEHHA, Residential Scenario | | | | 30 | 0.07 | 5,200 | 16 | 1.7 | -- | 660 | 3,000 | 80 | 380 | -- | 380 | 380 | 5 | 530 | 23,000 | 18 |
| OEHHA, Industrial Scenario | | | | 380 | 0.24 | 63,000 | 190 | 7.5 | -- | 3,200 | 38,000 | 320 | 4,800 | -- | 4,800 | 4,800 | 63 | 6,700 | 100,000 | 180 |

**Notes:**

ND = Constituents not detected at or above their respective laboratory method reporting limit as reported in Appendix D
mg/kg = milligrams per kilogram
ft bgs = feet below ground surface
USEPA RSL = United States Environmental Protection Agency Regional Screening Level (May 2016)
**Blue** = Exceeds USEPA RSL, Residential Soil
**Red** = Exceeds USEPA RSL, Industrial Soil
SFRWQCB ESLs = San Francisco Regional Water Quality Control Board Environmental Screening Levels - Shallow Soils (<3m bgs)
= Exceeds ESLs
-- = Not applicable or established

OEHHA Screening Levels = Office of Environmental Health Hazard Assessment Screening Levels
= Exceeds OEHHA Screening Levels (Residential)
= Exceeds OEHHA Screening Levels (Industrial)

**TABLE 5**
**Summary and Comparison of Background Metals Concentrations**
800 Air Way, Glendale, California

| Metals | Concentrations (mg/kg) | | | | | | | | | | | | |
|---|---|---|---|---|---|---|---|---|---|---|---|---|---|
| | **Source: USGS 1984** Western U.S. | | | **Source: Kearney Foundation 1996** California (Agricultural Soils) | | | **Source: Cal-EPA 1991** California (Agricultural Soils) | | | **Source: Cal-EPA 1992** Southern California | | | **Source:** 800 Air Way, Glendale, California |
| | **Minimum** | **Geometric Mean** | **Maximum** | **Minimum** | **Geometric Mean** | **Maximum** | **Minimum** | **Geometric Mean** | **Maximum** | **Minimum** | **Geometric Mean** | **Maximum** | **Maximum** |
| Antimony (Sb) | < 1 | 0.47 | **2.6** | 0.15 | 0.5 | **1.95** | NE | NE | NE | 0.12 | NR | **1.90** | <10 |
| Arsenic (As) | < 0.10 | 5.5 | **97** | 0.6 | 2.8 | **11.0** | 1.4 | 6.2 | **20.3** | 1.8 | NR | **15.2** | **11** |
| Barium (Ba) | 70 | 580 | **5,000** | 133 | 468 | **1400** | 146 | 424 | **974** | 23 | NR | **560** | **230** |
| Beryllium (Be) | < 1 | 0.68 | **15** | 0.25 | 1.14 | **2.70** | NE | NE | NE | < 0.1 | NR | **1.2** | <1.0 |
| Cadmium (Cd) | NE | NE | **NE** | 0.05 | 0.26 | **1.70** | 0.04 | 0.15 | **1.29** | 0.05 | NR | **1.45** | **3.0** |
| Chromium (Cr) | 3 | 41 | **2000** | 23 | 76 | **1579** | 23 | 76 | **1579** | 5.8 | NR | **32.6** | **30** |
| Cobalt (Co) | < 3 | 7.1 | **50** | 2.7 | 12.6 | **46.9** | 2.7 | 12.6 | **46.9** | 1.6 | NR | **23.2** | **15** |
| Copper (Cu) | 2 | 21 | **300** | 9.1 | 24.0 | **96.4** | 9.9 | 33 | **164.6** | 3.8 | NR | **54.0** | **68** |
| Lead (Pb) | < 10 | 17 | **700** | 12.4 | 21.7 | **97.1** | 8.5 | 13.8 | **28.7** | 2.5 | NR | **189.4** | **220** |
| Mercury (Hg) | < 0.01 | 0.46 | **4.6** | 0.10 | 0.20 | **0.90** | NE | NE | NE | 0.10 | NR | **0.60** | **0.31** |
| Molybdenum (Mo) | < 3 | 0.85 | **7** | 0.1 | 0.9 | **9.6** | NE | NE | NE | 0.15 | NR | **1.40** | <5.0 |
| Nickel (Ni) | < 5 | 15 | **700** | 9 | 36 | **509** | 9 | 36 | **509** | 3.5 | NR | **28.2** | **26** |
| Selenium (Se) | < 0.1 | 0.23 | **4.3** | 0.015 | 0.028 | **0.430** | < 0.1 | 0.26 | **1.3** | NE | NE | NE | <0.50 |
| Silver (Ag) | NE | NE | **NE** | 0.10 | 0.41 | **8.30** | NE | NE | NE | 0.07 | NR | **0.75** | <1.0 |
| Thallium (Th) | 2.4 | 9.1 | **31** | 5.3 | 13.8 | **36.2** | NE | NE | NE | 0.05 | NR | **35.0** | <5.0 |
| Vanadium (V) | 7 | 70 | **500** | 39 | 101 | **288** | 39 | 102 | **288** | 18 | NR | **84.8** | **69** |
| Zinc (Zn) | 10 | 55 | **2,100** | 88 | 145 | **236** | 13 | 123 | **354** | 10.3 | NR | **247.0** | **290** |

**Notes:**
NA - Not Evaluated
NR = Not Reported
USGS 1984: Element Concentrations in Soils and Other Surficial Materials of the Conterminous United States, U.S. Geological Survey Professional Paper 1270 by H.T. Shackette and J. G. Boerngen (Western U.S. Data)
Kearney Foundation 1996: Background Concentrations of Trace and Major Elements in California Soils, Kearney Foundation of Soil Science, Division of Agriculture and Natural Resources, University of California
Cal-EPA 1991: Background Levels of Trace Elements in Southern California Soils, Draft Annual Report, California Environmental Protection Agency, Contract No. 89-T0081 by University of California, Riverside, California, April 1991 (Agricultural soils)
Cal-EPA 1992: Background Levels of Trace Elements in Southern California Soils, Draft Annual Report, California Environmental Protection Agency, Contract No. 89-T0081 by University of California, Riverside, California, June 1992 (Composite samples from various depths)

**TABLE 6**
**Soil Analytical Results - Hexavalent Chromium**
800 Air Way, Glendale, California

| Boring Number | Sample Depth (ft bgs) | Sample Number | Sample Date | 7199 (mg/kg) |
|---|---|---|---|---|
| | | | | Hexavalent Chromium |
| **SB-1** | 5 | SB-1-5 | 4/29/16 | ND |
| **SB-2** | 10 | SB-2-10 | 4/29/16 | ND |
| **SB-3** | 35 | SB-3-35 | 4/28/16 | ND |
| **SB-4** | 10 | SB-4-10 | 4/29/16 | ND |
| **SB-5** | 20 | SB-5-20 | 4/28/16 | ND |
| **SB-6** | 10 | SB-6-10 | 4/27/16 | ND |
| **SB-7** | 15 | SB-7-15 | 4/27/16 | ND |
| **SB-8** | 25 | SB-8-25 | 4/27/16 | ND |
| **SB-9** | 10 | SB-9-10 | 4/28/16 | ND |
| **SB-10** | 10 | SB-10-10 | 4/29/16 | ND |
| **SB-11** | 5 | SB-11-5 | 4/28/16 | ND |
| **SB-12** | 40 | SB-12-40 | 4/27/16 | ND |
| **SB-13** | 5 | SB-13-5 | 4/29/16 | ND |
| **SB-14** | 15 | SB-14-15 | 4/26/16 | ND |
| **SB-15** | 11 | SB-15-11 | 4/26/16 | ND |
| **SB-16** | 11 | SB-16-11 | 4/26/16 | ND |
| **USEPA RSL, Residential Soil** | | | | **0.3** |
| **USEPA RSL, Industrial Soil** | | | | **6.3** |
| **SFRWQCB ESL** | | | | **0.3** |
| **OEHHA, Residential Scenario** | | | | **170** |
| **OEHHA, Industrial Scenario** | | | | **370** |

**Notes:**

ND = Constituents not detected at or above their respective laboratory method reporting limit as reported in Appendix D

mg/kg = milligrams per kilogram

ft bgs = feet below ground surface

USEPA RSL = United States Environmental Protection Agency Regional Screening Level (May 2016)

**Blue** = Exceeds USEPA RSL, Residential Soil

**Red** = Exceeds USEPA RSL, Industrial Soil

SFRWQCB ESLs = San Francisco Regional Water Quality Control Board Environmental Screening Levels - Tier 1

= Exceeds ESLs

OEHHA Screening Levels = Office of Environmental Health Hazard Assessment Screening Levels

= Exceeds OEHHA Screening Levels (Residential)

= Exceeds OEHHA Screening Levels (Industrial)

**TABLE 7**
**Groundwater Analytical Results - VOCs**
800 Air Way, Glendale, California

| Boring Number | Sample Number | Sample Depth (ft bgs) | Sample Date | 8260B (µg/L) | | | | | | | | | |
|---|---|---|---|---|---|---|---|---|---|---|---|---|---|
| | | | | Carbon Tetrachloride | 1,1-DCA | 1,1-DCE | 1,2-DCE (EDC) | cis 1,2-DCE | Chloroform | PCE | TCE | R113 | Other VOCs |
| **SB-3** | SB-3-GW | 44 | 4/28/16 | ND | **1.7** | **12** | ND | **3.7** | **2.0** | **12** | **140** | ND | ND |
| **SB-5** | SB-5-GW | 41.5 | 4/28/16 | ND | **1.1** | **6.5** | ND | **3.4** | **1.3** | **13** | **100** | ND | ND |
| **SB-9** | SB-9-GW | 43 | 4/28/16 | ND | **3.1** | **16** | ND | **8.0** | **2.7** | **16** | **230** | ND | ND |
| **SB-12** | SB-12-GW | 45 | 4/27/16 | ND | **2.6** | **17** | ND | **5.0** | **3.0** | **8.7** | **320** | ND | ND |
| **MW-1** | MW-1 | 42.68 | 5/3/16 | <2.5 | **6.0** | **42** | ND | **16** | **4.4** | **17** | **560** | ND | ND |
| **MW-2** | MW-2 | 43.04 | 5/3/16 | **4.2** | **4.5** | **31** | ND | **10** | **3.8** | **21** | **500** | **0.66** | ND |
| **B-7** | B-7 | 43.34 | 5/3/16 | **5.3** | **5.2** | **40** | **1.2** | **8.0** | **4.2** | **21** | **650** | **0.74** | ND |
| **MW-9** | MW-9 | 44.92 | 5/3/16 | **3.5** | **3.3** | **19** | ND | **6.7** | **3.2** | **13** | **380** | ND | ND |
| **CDPH MCL** | | | | **0.5** | **5.0** | **6.0** | **--** | **6.0** | **--** | **5.0** | **5.0** | **1,200** | **--** |
| **SFRWQCB ESL** | | | | **0.22** | **5.0** | **3.2** | **0.5** | **6.0** | **2.3** | **3.0** | **--** | **--** | **--** |

**Notes:**
ND = Constituents not detected at or above their respective laboratory method reporting limit as reported in Appendix D
µg/L = micrograms per liter
ft bgs = feet below ground surface
CDPH MCL = California Department of Public Health Maximum Contaminant Levels
SFRWQCB ESLs = San Francisco Regional Water Quality Control Board Environmental Screening Levels
= Exceeds ESL
**Red** = Exceeds MCL
-- = Not established
R113 = 1,1,2-Trichloro-1,2,2-Trifluoroethane

**TABLE 8**
**Groundwater Analytical Results - TPH**
800 Air Way, Glendale, California

| Boring Number | Sample Number | Sample Depth (ft bgs) | Sample Date | 8015M (mg/L) | | | | | | | | | | | | | | | | | |
|---|---|---|---|---|---|---|---|---|---|---|---|---|---|---|---|---|---|---|---|---|---|
| | | | | C6-C8 | C8-C10 | C10-C12 | C12-C14 | C12-C14 | C14-C16 | C16-C18 | C18-C20 | C20-C22 | C22-C24 | C24-C26 | C26-C28 | C28-C32 | C32-C34 | C34-C36 | C36-C40 | C40-C44 | TPH (C6-C44) |
| **SB-3** | SB-3-GW | 44 | 4/28/16 | **0.010** | <0.010 | <0.010 | <0.010 | **0.015** | <0.010 | <0.010 | <0.010 | <0.010 | <0.010 | <0.010 | <0.010 | <0.010 | <0.010 | <0.010 | <0.010 | <0.010 | <0.10 |
| **SB-5** | SB-5-GW | 41.5 | 4/28/16 | **0.030** | <0.010 | **0.012** | <0.010 | **0.026** | **0.013** | **0.015** | **0.016** | **0.027** | **0.010** | <0.010 | <0.010 | **0.013** | <0.010 | <0.010 | <0.010 | <0.010 | **0.150** |
| **SB-9** | SB-9-GW | 43 | 4/28/16 | **0.023** | <0.010 | <0.010 | <0.010 | **0.015** | <0.010 | <0.010 | <0.010 | <0.010 | <0.010 | <0.010 | <0.010 | <0.010 | <0.010 | <0.010 | <0.010 | <0.010 | <0.10 |
| **SB-12** | SB-12-GW | 45 | 4/27/16 | **0.017** | <0.010 | <0.010 | <0.010 | **0.025** | **0.017** | **0.020** | **0.025** | **0.030** | **0.027** | **0.017** | **0.026** | **0.073** | **0.030** | **0.031** | **0.055** | **0.015** | **0.410** |
| **MW-1** | MW-1 | 43 | 5/3/16 | <0.010 | <0.010 | <0.010 | <0.010 | <0.010 | <0.010 | <0.010 | <0.010 | <0.010 | <0.010 | <0.010 | <0.010 | <0.010 | <0.010 | <0.010 | <0.010 | <0.010 | <0.10 |
| **MW-2** | MW-2 | 43 | 5/3/16 | <0.010 | <0.010 | <0.010 | <0.010 | <0.010 | <0.010 | <0.010 | <0.010 | <0.010 | <0.010 | **0.043** | <0.010 | <0.010 | <0.010 | <0.010 | <0.010 | <0.010 | <0.10 |
| **B-7** | B-7 | 43 | 5/3/16 | <0.010 | <0.010 | <0.010 | <0.010 | **0.011** | <0.010 | <0.010 | <0.010 | <0.010 | <0.010 | <0.010 | <0.010 | <0.010 | <0.010 | <0.010 | <0.010 | <0.010 | <0.10 |
| **MW-9** | MW-9 | 44.92 | 5/3/16 | <0.010 | <0.010 | <0.010 | <0.010 | **0.028** | <0.010 | <0.010 | <0.010 | <0.010 | <0.010 | <0.010 | <0.010 | <0.010 | <0.010 | <0.010 | <0.010 | <0.010 | <0.10 |

**Notes:**
ND = Constituents not detected at or above their respective laboratory method reporting limit as reported in Appendix D
mg/L = milligrams per liter
ft bgs = feet below ground surface

**TABLE 9**
**Groundwater Analytical Results - CAM Metals/Hexavalent Chromium**
800 Air Way, Glendale, California

| Boring Number | Sample Number | Sample Depth (ft bgs) | Sample Date | 6010B (mg/L) | | | | | | | | | | | | | | | | | 7471A (mg/L) | 7199 (mg/L) |
|---|---|---|---|---|---|---|---|---|---|---|---|---|---|---|---|---|---|---|---|---|---|---|
| | | | | Antimony | Arsenic | Barium | Beryllium | Cadmium | Chromium | Cobalt | Copper | Lead | Molybdenum | Nickel | Selenium | Silver | Thallium | Vanadium | Zinc | Mercury | Hexavalent chromium |
| **SB-3** | SB-3-GW | 44 | 4/28/16 | <0.20 | <0.0070 | **0.47** | <0.020 | <0.020 | **1.1** | **0.14** | **0.12** | <0.0050 | <0.050 | **0.11** | <0.0050 | <0.020 | <0.10 | **0.22** | **0.13** | <0.00050 | <0.003 |
| **SB-5** | SB-5-GW | 41.5 | 4/28/16 | <0.20 | **0.011** | **0.62** | <0.020 | <0.020 | **0.58** | **0.23** | **0.39** | <0.0050 | <0.050 | **0.22** | <0.0050 | <0.020 | <0.10 | **0.76** | **0.90** | <0.00050 | <0.003 |
| **SB-9** | SB-9-GW | 43 | 4/28/16 | <0.20 | **0.0070** | **1.1** | <0.020 | <0.020 | **0.62** | **0.13** | **0.11** | <0.0050 | <0.050 | **0.081** | <0.0050 | <0.020 | <0.10 | <0.20 | **0.17** | <0.00050 | <0.003 |
| **SB-12** | SB-12-GW | 45 | 4/27/16 | <0.20 | **0.014** | **1.1** | <0.020 | <0.020 | **0.68** | **0.19** | **0.23** | **0.09** | **0.15** | **0.26** | <0.0050 | <0.020 | <0.10 | **0.39** | **0.40** | <0.00050 | <0.003 |
| **MW-1** | MW-1 | 42.68 | 5/3/16 | <0.20 | <0.0070 | <0.20 | <0.020 | <0.020 | **0.064** | <0.050 | <0.050 | <0.0050 | <0.050 | <0.050 | <0.0050 | <0.020 | <0.10 | <0.20 | <0.050 | <0.00050 | **0.062** |
| **MW-2** | MW-2 | 43.04 | 5/3/16 | <0.20 | **0.0070** | <0.20 | <0.020 | <0.020 | **0.085** | <0.050 | <0.050 | <0.0050 | <0.050 | <0.050 | <0.0050 | <0.020 | <0.10 | <0.20 | <0.050 | <0.00050 | **0.088** |
| **B-7** | B-7 | 43.34 | 5/3/16 | <0.20 | **0.0070** | <0.20 | <0.020 | <0.020 | <0.050 | <0.050 | <0.050 | <0.0050 | <0.050 | <0.050 | <0.0050 | <0.020 | <0.10 | <0.20 | <0.050 | <0.00050 | **0.052** |
| **MW-9** | MW-9 | 44.92 | 5/3/16 | <0.20 | **0.0080** | **0.26** | <0.020 | <0.020 | <0.050 | <0.050 | <0.050 | <0.0050 | <0.050 | <0.050 | <0.0050 | <0.020 | <0.10 | <0.20 | <0.050 | <0.00050 | **0.024** |
| **CDPH MCL** | | | | **0.006** | **0.010** | **1.0** | **0.004** | **0.005** | **0.05** | **--** | **1.3** | **0.015** | **--** | **0.1** | **0.05** | **--** | **0.002** | **--** | **--** | **0.002** | **0.010** |

**Notes:**

-- = Not Analyzed

< = Constituents not detected at or above their respective laboratory method reporting limit as reported in Appendix D

mg/L = milligrams per liter

ft bgs = feet below ground surface

CDPH MCL = California Department of Public Health Maximum Contaminant Levels

**Red** = Exceeds MCL

# TABLE 10
## SOIL VAPOR ANALYTICAL RESULTS - VOCs
800 Air Way, Glendale, California

| Location | Sample ID | Sample Depth (ft bgs) | Date | EPA Method TO-15 (µg/L) | | | | | | | | | | | | | | | | | | | | | | | | |
|---|---|---|---|---|---|---|---|---|---|---|---|---|---|---|---|---|---|---|---|---|---|---|---|---|---|---|---|---|
| | | | | Acetone | Carbon Tetrachloride | Chloroform | 2-Butanone | 1,1-DCE | cis-1,2-DCE | Ethanol | Ethylbenzene | 4-Ethyltoluene | Heptane | n-Hexane | R113 | 2,2,4-Trimethylpentane | IPA* | MIBK | Propylene | n-Propylbenzene | Styrene | PCE | TCE | THF | 1,2,4-TMB | 1,3,5-TMB | Toluene | o-Xylene | m,p-Xylenes |
| SB-6 | SB-6-5-SV | 5 | 5/2/2016 | ND | ND | ND | ND | ND | ND | ND | ND | ND | ND | ND | ND | ND | ND | ND | ND | ND | ND | ND | ND | **0.010** | ND | ND | ND | ND | **0.013** |
| | SB-6-15-SV | 15 | | ND | ND | ND | ND | ND | ND | ND | ND | ND | **0.029** | **0.064** | ND | ND | ND | ND | **0.077** | ND | ND | **0.024** | ND | ND | ND | ND | **0.021** | ND | **ND** |
| | SB-6-30-SV | 30 | | **0.021** | ND | **0.029** | **0.027** | ND | ND | ND | **0.037** | **0.022** | ND | ND | **0.010** | ND | ND | **0.010** | ND | **0.016** | ND | **0.096** | ND | **0.021** | **0.084** | **0.036** | **0.088** | **0.068** | **0.16** |
| SB-8 | SB-8-5-SV | 5 | 5/2/2016 | ND | ND | **0.24** | ND | ND | ND | ND | ND | ND | ND | ND | ND | **0.036** | ND | ND | **0.20** | ND | ND | ND | ND | ND | ND | ND | **0.022** | ND | **0.027** |
| | SB-8-15-SV | 15 | | ND | ND | **0.10** | ND | ND | ND | ND | ND | ND | ND | ND | ND | ND | ND | ND | ND | ND | ND | **0.17** | ND | ND | **0.17** | ND | **0.29** | **0.14** | **0.40** |
| | SB-8-30-SV | 30 | | ND | ND | ND | ND | **2.0** | ND | ND | ND | ND | ND | ND | ND | ND | ND | ND | ND | ND | ND | **1.4** | **7.1** | ND | ND | ND | ND | ND | **0.42** |
| SB-12 | SB-12-5-SV | 5 | 5/2/2016 | ND | ND | ND | ND | ND | ND | ND | ND | ND | ND | ND | ND | ND | ND | ND | ND | ND | ND | **0.61** | ND | ND | ND | ND | **0.021** | ND | **0.021** |
| | SB-12-15-SV | 15 | | ND | ND | ND | ND | **0.053** | ND | ND | ND | ND | ND | ND | ND | ND | ND | ND | ND | ND | ND | **1.2** | **0.32** | ND | ND | ND | ND | ND | ND |
| | SB-12-30-SV | 30 | | ND | ND | ND | ND | **2.4** | ND | ND | ND | ND | ND | ND | ND | ND | ND | ND | ND | ND | ND | **1.6** | **9.1** | ND | ND | ND | ND | ND | ND |
| SB-14 | SB-14-5-SV | 5 | 5/2/2016 | ND | ND | ND | ND | **0.25** | ND | ND | ND | ND | ND | ND | ND | ND | ND | ND | ND | ND | ND | **0.55** | **2.5** | ND | ND | ND | ND | ND | ND |
| | SB-14-15-SV | 15 | | ND | ND | ND | ND | **1.1** | ND | ND | ND | ND | ND | ND | ND | ND | ND | ND | ND | ND | ND | **1.0** | **7.2** | ND | ND | ND | ND | ND | ND |
| SB-15 | SB-15-5-SV | 5 | 5/2/2016 | ND | ND | ND | ND | **0.61** | ND | ND | ND | ND | ND | ND | ND | ND | ND | ND | ND | ND | ND | **0.55** | **4.5** | ND | ND | ND | ND | ND | ND |
| | SB-15-11-SV | 11 | | ND | ND | ND | ND | **1.1** | ND | ND | ND | ND | ND | ND | ND | ND | ND | ND | ND | ND | ND | **0.75** | **6.6** | ND | ND | ND | ND | ND | ND |
| SB-16 | SB-16-5-SV | 5 | 5/2/2016 | ND | ND | ND | ND | ND | ND | ND | ND | ND | ND | ND | ND | ND | **0.054** | ND | ND | ND | **0.031** | **0.93** | **0.25** | ND | ND | ND | ND | ND | ND |
| | SB-16-11-SV | 11 | | ND | **0.025** | **0.028** | ND | **0.043** | **0.036** | **0.028** | ND | ND | ND | ND | **0.023** | ND | **0.031** | ND | ND | ND | **0.083** | **1.1** | **0.87** | ND | ND | ND | ND | ND | ND |
| **SFRWQCB ESLs** | | | | **15,000** | **0.033** | **0.061** | **--** | **37** | **4.2** | **--** | **0.56** | **--** | **--** | **--** | **--** | **--** | **--** | **--** | **--** | **--** | **470** | **0.24** | **--** | **--** | **--** | **--** | **--** | **--** | **--** |

**Notes:**

µg/L = micrograms per Liter

ND = Constituents not detected at or above their respective laboratory method reporting limit as reported in Appendix D

-- = Not Established

ft bgs = feet below ground surface

SFRWQCB ESLs = San Francisco Regional Water Quality Control Board Environmental Screening Levels

= Exceeds ESL

PCE =Tetrchloroethylene

TCE =Trichloroethylene

THF =Tetrahydrofuran

1,2,4 TMB =1,2,4- Trimethylbenzene

1,3,5-TMB = 1,3,5-Trimethylbenzene

*IPA was used as leak check

**TABLE 11**
**HERO VAPOR INTRUSION MODEL CACULATIONS**
800 Air Way, Glendale, California

| Analyte | Boring Number | Concentration (µg/L) | | Cancer Risk | Non Cancer Hazard |
|---|---|---|---|---|---|
| Acetone (67-64-1) | SB-6-30-SV | 0.021 | HERO RD | NA | 1.4E-07 |
| | | | HERO COM | NA | 1.7E-08 |
| Carbon Tetrachloride (56-23-5) | SB-16-11-SV | 0.025 | HERO RD | 1.0E-07 | 1.6E-04 |
| | | | HERO COM | 1.2E-08 | 1.9E-05 |
| Chloroform (67-66-3) | SB-6-30-SV | 0.029 | HERO RD | 3.3E-08 | 3.9E-05 |
| | | | HERO COM | 3.7E-09 | 4.6E-06 |
| | SB-8-5-SV | 0.24 | HERO RD | 1.4E-06 | 1.6E-03 |
| | | | HERO COM | 1.5E-07 | 1.9E-04 |
| | SB-8-15-SV | 0.10 | HERO RD | 2.2E-07 | 2.6E-04 |
| | | | HERO COM | 2.5E-08 | 3.1E-05 |
| | SB-16-11-SV | 0.028 | HERO RD | 8.1E-08 | 9.6E-05 |
| | | | HERO COM | 9.2E-09 | 1.1E-05 |
| 2-Butanone (78-93-3) | SB-6-30-SV | 0.027 | HERO RD | NA | 8.5E-07 |
| | | | HERO COM | NA | 1.0E-07 |
| 1,1-DCE (75-35-4) | SB-8-30-SV | 2.0 | HERO RD | NA | 4.2E-03 |
| | | | HERO COM | NA | 5.0E-04 |
| | SB-12-15-SV | 0.053 | HERO RD | NA | 2.1E-04 |
| | | | HERO COM | NA | 2.5E-05 |
| | SB-12-30-SV | 2.4 | HERO RD | NA | 5.0E-03 |
| | | | HERO COM | NA | 6.0E-04 |
| | SB-14-5-SV | 0.25 | HERO RD | NA | 2.6E-03 |
| | | | HERO COM | NA | 3.0E-04 |
| | SB-14-15-SV | 1.1 | HERO RD | NA | 4.4E-03 |
| | | | HERO COM | NA | 5.3E-04 |
| | SB-15-5-SV | 0.61 | HERO RD | NA | 6.2E-03 |
| | | | HERO COM | NA | 7.4E-04 |
| | SB-15-11-SV | 1.1 | HERO RD | NA | 5.8E-03 |
| | | | HERO COM | NA | 6.9E-04 |
| | SB-16-11-SV | 0.043 | HERO RD | NA | 2.3E-04 |
| | | | HERO COM | NA | 2.7E-05 |
| cis-1,2-DCE (156-59-2) | SB-16-11-SV | 0.036 | HERO RD | NA | 1.9E-03 |
| | | | HERO COM | NA | 2.3E-04 |
| Ethylbenzene (100-41-4) | SB-6-30-SV | 0.037 | HERO RD | 4.1E-09 | 4.4E-06 |
| | | | HERO COM | 4.6E-10 | 5.2E-07 |
| n-Hexane (110-54-3) | SB-6-15-SV | 0.064 | HERO RD | NA | 2.2E-05 |
| | | | HERO COM | NA | 2.6E-06 |
| R113 (76-13-1) | SB-6-30-SV | 0.010 | HERO RD | NA | 2.2E-08 |
| | | | HERO COM | NA | 2.6E-09 |
| | SB-16-11-SV | 0.023 | HERO RD | NA | 1.4E-07 |
| | | | HERO COM | NA | 1.6E-08 |
| MIBK (108-10-1) | SB-6-30-SV | 0.010 | HERO RD | NA | 4.0E-07 |
| | | | HERO COM | NA | 4.8E-08 |
| n-Propylbenzene (103-65-1) | SB-6-30-SV | 0.016 | HERO RD | NA | 1.7E-06 |
| | | | HERO COM | NA | 2.0E-07 |
| Styrene (100-42-5) | SB-16-5-SV | 0.031 | HERO RD | NA | 2.1E-05 |
| | | | HERO COM | NA | 2.9E-06 |
| | SB-16-11-SV | 0.083 | HERO RD | NA | 2.9E-05 |
| | | | HERO COM | NA | 3.5E-06 |

**TABLE 11**
**SOIL VAPOR RESULTS - HERO VAPOR INTRUSION MODEL**
800 Air Way, Glendale, California

| Analyte | Boring Number | Concentration (µg/L) | | Cancer Risk | Non Cancer Hazard |
|---|---|---|---|---|---|
| PCE (127-18-4) | SB-6-15-SV | 0.024 | HERO RD | 9.1E-09 | 1.2E-04 |
| | | | HERO COM | 1.0E-09 | 1.4E-05 |
| | SB-6-30-SV | 0.096 | HERO RD | 1.9E-08 | 2.4E-04 |
| | | | HERO COM | 2.1E-09 | 2.9E-05 |
| | SB-8-15-SV | 0.17 | HERO RD | 6.4E-08 | 8.4E-04 |
| | | | HERO COM | 7.4E-09 | 1.0E-04 |
| | SB-8-30-SV | 1.4 | HERO RD | 2.7E-07 | 3.5E-03 |
| | | | HERO COM | 3.1E-08 | 4.2E-04 |
| | SB-12-5-SV | 0.61 | HERO RD | 6.4E-07 | 8.4E-03 |
| | | | HERO COM | 7.3E-08 | 9.9E-04 |
| | SB-12-15-SV | 1.2 | HERO RD | 4.5E-07 | 5.9E-03 |
| | | | HERO COM | 5.2E-08 | 7.1E-04 |
| | SB-12-30-SV | 1.6 | HERO RD | 3.1E-07 | 4.0E-03 |
| | | | HERO COM | 3.5E-08 | 4.8E-04 |
| | SB-14-5-SV | 0.55 | HERO RD | 5.8E-07 | 7.5E-03 |
| | | | HERO COM | 6.6E-08 | 9.0E-04 |
| | SB-14-15-SV | 1.0 | HERO RD | 3.8E-07 | 4.9E-03 |
| | | | HERO COM | 4.3E-08 | 5.9E-04 |
| | SB-15-5-SV | 0.55 | HERO RD | 5.8E-07 | 7.5E-03 |
| | | | HERO COM | 6.6E-08 | 9.0E-04 |
| | SB-15-11-SV | 0.75 | HERO RD | 3.8E-07 | 5.0E-03 |
| | | | HERO COM | 4.4E-08 | 5.9E-04 |
| | SB-16-5-SV | 0.93 | HERO RD | 9.8E-07 | 1.3E-02 |
| | | | HERO COM | 1.1E-07 | 1.5E-03 |
| | SB-16-11-SV | 1.1 | HERO RD | 5.6E-07 | 7.3E-03 |
| | | | HERO COM | 6.4E-08 | 8.7E-04 |
| TCE (79-01-6) | SB-8-30-SV | 7.1 | HERO RD | 1.3E-06 | 4.2E-01 |
| | | | HERO COM | 1.5E-07 | 5.0E-02 |
| | SB-12-15-SV | 0.32 | HERO RD | 1.1E-07 | 3.7E-02 |
| | | | HERO COM | 1.3E-08 | 4.4E-03 |
| | SB-12-30-SV | 9.1 | HERO RD | 1.6E-06 | 5.4E-01 |
| | | | HERO COM | 1.9E-07 | 6.4E-02 |
| | SB-14-5-SV | 2.5 | HERO RD | 2.3E-06 | 7.6E-01 |
| | | | HERO COM | 2.6E-07 | 9.0E-02 |
| | SB-14-15-SV | 7.2 | HERO RD | 2.5E-06 | 8.2E-01 |
| | | | HERO COM | 2.9E-07 | 9.8E-02 |
| | SB-15-5-SV | 4.5 | HERO RD | 4.2E-06 | 1.4E+00 |
| | | | HERO COM | 4.8E-07 | 1.6E-01 |
| | SB-15-11-SV | 6.6 | HERO RD | 3.1E-06 | 1.0E+00 |
| | | | HERO COM | 3.5E-07 | 1.2E-01 |
| | SB-16-5-SV | 0.25 | HERO RD | 2.3E-07 | 7.6E-02 |
| | | | HERO COM | 2.6E-08 | 9.0E-03 |
| | SB-16-11-SV | 0.87 | HERO RD | 4.0E-07 | 1.3E-01 |
| | | | HERO COM | 4.6E-08 | 1.6E-02 |
| THF (109-99-9) | SB-6-5-SV | 0.010 | HERO RD | NA | 3.9E-06 |
| | | | HERO COM | NA | 4.6E-07 |
| | SB-6-30-SV | 0.021 | HERO RD | NA | 1.7E-06 |
| | | | HERO COM | NA | 2.0E-07 |
| 1,2,4-TMB (95-63-6) | SB-6-30-SV | 0.084 | HERO RD | NA | 1.3E-03 |
| | | | HERO COM | NA | 1.5E-04 |
| | SB-8-15-SV | 0.17 | HERO RD | NA | 5.0E-03 |
| | | | HERO COM | NA | 5.9E-04 |
| 1,3,5-TMB (108-67-8) | SB-6-30-SV | 0.036 | HERO RD | NA | 1.1E-04 |
| | | | HERO COM | NA | 1.3E-05 |

**TABLE 11**
**SOIL VAPOR RESULTS - HERO VAPOR INTRUSION MODEL**
800 Air Way, Glendale, California

| Analyte | Boring Number | Concentration (µg/L) | | Cancer Risk | Non Cancer Hazard |
|---|---|---|---|---|---|
| Toluene (108-88-3) | SB-6-15-SV | 0.021 | HERO RD | NA | 1.8E-05 |
| | | | HERO COM | NA | 2.1E-06 |
| | SB-6-30-SV | 0.088 | HERO RD | NA | 3.9E-05 |
| | | | HERO COM | NA | 4.7E-06 |
| | SB-8-5-SV | 0.022 | HERO RD | NA | 4.9E-05 |
| | | | HERO COM | NA | 5.8E-06 |
| | SB-8-15-SV | 0.29 | HERO RD | NA | 2.5E-04 |
| | | | HERO COM | NA | 2.9E-05 |
| | SB-12-5-SV | 0.021 | HERO RD | NA | 4.7E-05 |
| | | | HERO COM | NA | 5.5E-06 |
| o-Xylene (95-47-6) | SB-6-30-SV | 0.068 | HERO RD | NA | 8.1E-05 |
| | | | HERO COM | NA | 9.6E-06 |
| | SB-8-15-SV | 0.14 | HERO RD | NA | 3.2E-04 |
| | | | HERO COM | NA | 3.8E-05 |

# Appendix A
# SOIL BORING LOGS

| | |
|---|---|
| PROJECT: **Grayson Power Plant - Phase II ESA**<br>LOCATION: **800 Airway, Glendale, CA**<br>PROJECT NUMBER: **2057123300** | WELL / PROBEHOLE / BOREHOLE NO:<br>**SB-1** PAGE 1 OF 2 |
| DRILLING: STARTED: **4/29/2016** COMPLETED: **4/29/2016**<br>INSTALLATION: STARTED: **4/29/2016** COMPLETED: **4/29/2016**<br>DRILLING COMPANY: **Core Probe International**<br>DRILLING EQUIPMENT: **Geo Probe 7822 DT**<br>DRILLING METHOD: **HA/Direct Push**<br>SAMPLING EQUIPMENT: **Acetate Liners/Terracores/Jars** | NORTHING (ft): EASTING (ft):<br>LATITUDE: LONGITUDE:<br>GROUND ELEV (ft): TOC ELEV (ft):<br>INITIAL DTW (ft): **NE** BOREHOLE DEPTH (ft): **40.0**<br>STATIC DTW (ft): **NE** WELL DEPTH (ft): **NA**<br>WELL CASING DIAMETER (in): **NA** BOREHOLE DIAMETER (in): **2.25**<br>LOGGED BY: **J. Sargent** CHECKED BY: **A. Sawant** |

| Time & Depth (feet) | Graphic Log | USCS | Description | Sample | Time Sample ID | Measured Recov. (feet) | Blow Count/ft | Headspace PID (ppm) | Depth (feet) |
|---|---|---|---|---|---|---|---|---|---|
| | | | 4" Asphalt | | | | | | |
| | | SM | SM; Silty SAND; very dark grayish brown (2.5Y 3/2), little fine gravel, fine to coarse-grained sand, some fines, moist, asphalt fragments, faint hydrocarbon (HC) odor, some dark staining | | 0915 SB-1-1 | | | 0.9 | |
| | | | Intermitent asphalt and black staining from 3' to 10' | | | | | | |
| 5 | | | Dark staining | | 0944 SB-1-5 | | | 39.7 | 5 |
| 10 | | | Dark staining | | 0948 SB-1-10 | | | 8.6 | 10 |
| | | | Color change to dark yellowish brown (10YR 4/4), no staining | | | | | | |
| 15 | | | Fine-grained sand, olive brown (2.5Y 4/4), increase in fines | | | | | | 15 |
| 20 | | | Same as above | | -- -- | | | 0.0 | 20 |

GEO FORM 304_SECOR037_20160602_GINT_GRAYSON_SB-1_THROUGH_SB-16.GPJ SECOR037.GDT 6/9/16

| | |
|---|---|
| PROJECT: **Grayson Power Plant - Phase II ESA**<br>LOCATION: **800 Airway, Glendale, CA**<br>PROJECT NUMBER: **2057123300** | WELL / PROBEHOLE / BOREHOLE NO:<br>**SB-1** PAGE 2 OF 2 |
| DRILLING: STARTED: **4/29/2016** COMPLETED: **4/29/2016**<br>INSTALLATION: STARTED: **4/29/2016** COMPLETED: **4/29/2016**<br>DRILLING COMPANY: **Core Probe International**<br>DRILLING EQUIPMENT: **Geo Probe 7822 DT**<br>DRILLING METHOD: **HA/Direct Push**<br>SAMPLING EQUIPMENT: **Acetate Liners/Terracores/Jars** | NORTHING (ft): EASTING (ft):<br>LATITUDE: LONGITUDE:<br>GROUND ELEV (ft): TOC ELEV (ft):<br>INITIAL DTW (ft): **NE** BOREHOLE DEPTH (ft): **40.0**<br>STATIC DTW (ft): **NE** WELL DEPTH (ft): **NA**<br>WELL CASING DIAMETER (in): **NA** BOREHOLE DIAMETER (in): **2.25**<br>LOGGED BY: **J. Sargent** CHECKED BY: **A. Sawant** |

| Time & Depth (feet) | Graphic Log | USCS | Description | Sample | Time Sample ID | Measured Recov. (feet) | Blow Count/ft | Headspace PID (ppm) | Depth (feet) |
|---|---|---|---|---|---|---|---|---|---|
| | | SM | | | | | | | |
| 25 | | | Increase in fines | | -- -- | | | 0.0 | 25 |
| 30 | | | | | -- -- | | | 0.0 | 30 |
| | | ML | ML; Sandy SILT, olive brown (4/3 2.5Y), some sand, non-plastic fines, wet (perched) | | | | | | |
| | | SM | SM; Silty SAND, olive brown (4/3 2.5Y), fine-grained sand, non-plastic fines, no HC odor, no staining | | | | | | |
| 35 | | | | | -- -- | | | 0.0 | 35 |
| | | ML | ML; Sandy SILT, olive brown (4/3 2.5Y), some sand, non-plastic fines | | | | | | |
| | | SM | SM; Silty SAND, olive brown (4/3 2.5Y), fine-grained sand, non-plastic fines, no HC odor, no staining | | | | | | |
| | | | | | - - | | | 0.0 | |
| 40 | | | Borehole terminated at 40 feet bgs. | | | | | | 40 |

| | |
|---|---|
| PROJECT: **Grayson Power Plant - Phase II ESA**<br>LOCATION: **800 Airway, Glendale, CA**<br>PROJECT NUMBER: **2057123300** | WELL / PROBEHOLE / BOREHOLE NO:<br>**SB-2** PAGE 1 OF 2 |
| DRILLING: STARTED: **4/29/2016** COMPLETED: **4/29/2016**<br>INSTALLATION: STARTED: **4/29/2016** COMPLETED: **4/29/2016**<br>DRILLING COMPANY: **Core Probe International**<br>DRILLING EQUIPMENT: **Geo Probe 7822 DT**<br>DRILLING METHOD: **HA/Direct Push**<br>SAMPLING EQUIPMENT: **Acetate Liners/Terracores/Jars** | NORTHING (ft): EASTING (ft):<br>LATITUDE: LONGITUDE:<br>GROUND ELEV (ft): TOC ELEV (ft):<br>INITIAL DTW (ft): **NE** BOREHOLE DEPTH (ft): **40.0**<br>STATIC DTW (ft): **NE** WELL DEPTH (ft): **NA**<br>WELL CASING DIAMETER (in): **NA** BOREHOLE DIAMETER (in): **2.25**<br>LOGGED BY: **J. Sargent** CHECKED BY: **A. Sawant** |

| Time & Depth (feet) | Graphic Log | USCS | Description | Sample | Time Sample ID | Measured Recov. (feet) | Blow Count/ft | Headspace PID (ppm) | Depth (feet) |
|---|---|---|---|---|---|---|---|---|---|
| | | | 4" Asphalt | | | | | | |
| | | SM | SM; Silty SAND, olive brown (2.5Y 4/2), fine-grained sand, some fines, moist, no hydrocarbon (HC) odor, no staining | | 0755 SB-2-1 | | | 0.0 | |
| 5 | | | Same as above | | -- -- | | | 0.0 | 5 |
| | | | Very dark grayish brown (10YR 3/2) | | | | | | |
| 10 | | | | | 0820 SB-2-10 | | | 0.1 | 10 |
| | | | Fine-grained sand, no gravel, increase in fines | | | | | | |
| 15 | | | | | | | | | 15 |
| 20 | | | | | 0825 SB-2-25 | | | 0.0 | 20 |
| | | | Olive brown (2.5Y 4/4), trace fine gravel | | | | | | |

| | |
|---|---|
| PROJECT: **Grayson Power Plant - Phase II ESA**<br>LOCATION: **800 Airway, Glendale, CA**<br>PROJECT NUMBER: **2057123300** | WELL / PROBEHOLE / BOREHOLE NO:<br>**SB-2** PAGE 2 OF 2 |
| DRILLING: STARTED: **4/29/2016** COMPLETED: **4/29/2016**<br>INSTALLATION: STARTED: **4/29/2016** COMPLETED: **4/29/2016**<br>DRILLING COMPANY: **Core Probe International**<br>DRILLING EQUIPMENT: **Geo Probe 7822 DT**<br>DRILLING METHOD: **HA/Direct Push**<br>SAMPLING EQUIPMENT: **Acetate Liners/Terracores/Jars** | NORTHING (ft): EASTING (ft):<br>LATITUDE: LONGITUDE:<br>GROUND ELEV (ft): TOC ELEV (ft):<br>INITIAL DTW (ft): **NE** BOREHOLE DEPTH (ft): **40.0**<br>STATIC DTW (ft): **NE** WELL DEPTH (ft): **NA**<br>WELL CASING DIAMETER (in): **NA** BOREHOLE DIAMETER (in): **2.25**<br>LOGGED BY: **J. Sargent** CHECKED BY: **A. Sawant** |

| Time & Depth (feet) | Graphic Log | USCS | Description | Sample | Time Sample ID | Measured Recov. (feet) | Blow Count/ft | Headspace PID (ppm) | Depth (feet) |
|---|---|---|---|---|---|---|---|---|---|
| | | SM | | | | | | | |
| | | ML | ML; Sandy SILT, olive brown (2.5Y 4/4), some very fine to fine-grained sand, non-plastic fines, moist, no HC odor, no staining | | | | | | |
| 25 | | | | | -- | | | 0.0 | 25 |
| | | SM | SM; Silty SAND, olive brown (2.5Y 4/4), fine-grained sand, some fines, moist, no HC odor, no staining | | | | | | |
| 30 | | | | | -- | | | 0.0 | 30 |
| | | SC | SC; Clayey SAND, olive brown (2.5Y 4/4), fine-grained sand, low to med, plasticity fines, wet (perched), no HC odor, no staining | | | | | | |
| | | SM | SM; Silty SAND, olive brown (2.5Y 4/4), fine-grained sand, some fines, moist, no HC odor, no staining | | | | | | |
| 35 | | | | | -- | | | 0.0 | 35 |
| | | SC | SC; Clayey SAND, olive brown (2.5Y 4/4), fine-grained sand, low to med, plasticity fines, wet (perched), no HC odor, no staining | | | | | | |
| | | SM | SM; Silty SAND, olive brown (2.5Y 4/4), fine-grained sand, some fines, moist, no HC odor, no staining | | | | | | |
| | | | | | -- | | | 0.0 | |
| 40 | | | Borehole terminated at 40 feet bgs. | | | | | | 40 |

| | |
|---|---|
| PROJECT: **Grayson Power Plant - Phase II ESA**<br>LOCATION: **800 Airway, Glendale, CA**<br>PROJECT NUMBER: **2057123300** | WELL / PROBEHOLE / BOREHOLE NO:<br>**SB-3** PAGE 1 OF 3 |
| DRILLING: STARTED: **4/28/2016** COMPLETED: **4/28/2016**<br>INSTALLATION: STARTED: **4/28/2016** COMPLETED: **4/28/2016**<br>DRILLING COMPANY: **Core Probe International**<br>DRILLING EQUIPMENT: **Geo Probe 7822 DT**<br>DRILLING METHOD: **HA/Direct Push**<br>SAMPLING EQUIPMENT: **Acetate Liners/Terracores/Jars** | NORTHING (ft): EASTING (ft):<br>LATITUDE: LONGITUDE:<br>GROUND ELEV (ft): TOC ELEV (ft):<br>INITIAL DTW (ft): **44** BOREHOLE DEPTH (ft): **50.0**<br>STATIC DTW (ft): **46.3** WELL DEPTH (ft): **NA**<br>WELL CASING DIAMETER (in): **NA** BOREHOLE DIAMETER (in): **2.25**<br>LOGGED BY: **J. Sargent** CHECKED BY: **A. Sawant** |

| Time & Depth (feet) | Graphic Log | USCS | Description | Sample | Time Sample ID | Measured Recov. (feet) | Blow Count/ft | Headspace PID (ppm) | Depth (feet) |
|---|---|---|---|---|---|---|---|---|---|
| | | | 3" Asphalt | | | | | | |
| | | SM | SM; Silty SAND, brown (7.5YR 4/3), trace fine gravel, fine to coarse-grained sand, some fines, wet (adjacent to cooling tower pond) | | 0643<br>SB-3-1 | | | 0.9 | |
| 5 | | | Same as above, slight increase in gravel | | -- | | | 0.0 | 5 |
| 10 | | | Same as above | | -- | | | 1.0 | 10 |
| 15 | | | Same as above, fine to medium-grained sand, no gravel, increase in fines | | -- | | | 1.2 | 15 |
| | | ML | ML; Sandy SILT, dark yellowish brown (10YR 4/4), some fine-graine sand, med. to low plasticity fines, moist, no HC odor, no staining | | | | | | |
| 20 | | SM | SM; Silty SAND, dark yellowish brown (10YR 4/4), fine to med.-grained sand, moist, no HC odor, no staining | | -- | | | 1.5 | 20 |

GEO FORM 304_SECOR037 20160602_GINT_GRAYSON_SB-1_THROUGH_SB-16.GPJ SECOR037.GDT 6/9/16

| | |
|---|---|
| PROJECT: **Grayson Power Plant - Phase II ESA**<br>LOCATION: **800 Airway, Glendale, CA**<br>PROJECT NUMBER: **2057123300** | WELL / PROBEHOLE / BOREHOLE NO:<br>**SB-3** PAGE 2 OF 3 |
| DRILLING: STARTED: **4/28/2016** COMPLETED: **4/28/2016**<br>INSTALLATION: STARTED: **4/28/2016** COMPLETED: **4/28/2016**<br>DRILLING COMPANY: **Core Probe International**<br>DRILLING EQUIPMENT: **Geo Probe 7822 DT**<br>DRILLING METHOD: **HA/Direct Push**<br>SAMPLING EQUIPMENT: **Acetate Liners/Terracores/Jars** | NORTHING (ft): EASTING (ft):<br>LATITUDE: LONGITUDE:<br>GROUND ELEV (ft): TOC ELEV (ft):<br>INITIAL DTW (ft): **44** BOREHOLE DEPTH (ft): **50.0**<br>STATIC DTW (ft): **46.3** WELL DEPTH (ft): **NA**<br>WELL CASING DIAMETER (in): **NA** BOREHOLE DIAMETER (in): **2.25**<br>LOGGED BY: **J. Sargent** CHECKED BY: **A. Sawant** |

| Time & Depth (feet) | Graphic Log | USCS | Description | Sample | Time Sample ID | Measured Recov. (feet) | Blow Count/ft | Headspace PID (ppm) | Depth (feet) |
|---|---|---|---|---|---|---|---|---|---|
| | | SW-SM | SW-SM; Well graded SAND with Silt, light olive brown (2.5Y 5/4), fine to coarse-grained sand, little fines, moist, no HC odor, no staining | | | | | | |
| | | SM | SM; Silty SAND, olive brown (2.5Y 4/4), fine-grained sand, some fines, moist, no HC odor, no staining | | -- -- | | | 0.7 | |
| 25 | | | | | | | | | 25 |
| | | CL | CL; Lean CLAY with Sand, olive brown (2.5Y 4/4), little fine-grained sand, med. to high plasticity fines, wet (perched), no HC odor, no staining | | | | | | |
| | | SM | SM; Silty SAND, olive brown (2.5Y 4/3), fine to medium-grained sand, some fines, moist, no HC odor, no staining | | -- -- | | | 1.6 | |
| 30 | | | | | | | | | 30 |
| | | SP-SM | SP-SM; Poorly Graded SAND with Silt, light olive brown (2.5Y 5/3), fine-grained sand, little fines, moist, no HC odor, no staining | | | | | | |
| 35 | | | | | 0709 SB-3-35 | | | 2.2 | 35 |
| | | CL | CL; Interbedded Lean CLAY with Sand, and poorly graded SAND with Silt, olive brown (2.5Y 4/4) | | | | | | |
| | | CL | CL; Some sand | | | | | | |
| | | SP | SP; Fine-grained SAND, little fines, mist | | | | | | |
| | | SC | SC; Clayey SAND, dark olive gray (5Y 3/2), fine to coarse-grained sand, some med. plasticity fines, wet, no HC odor, no staining | | | | | | |
| 40 | | | | | 0712 SB-3-40 | | | 1.7 | 40 |
| | | SM | Same as above, fine to coarse-grained sand<br>SM; Silty SAND, olive (5Y 5/3), very fine-grained sand, some fines, moist, no HC odor, no staining | | | | | | |

GEO FORM 304_SECOR037 20160602_GINT_GRAYSON_SB-1_THROUGH_SB-16.GPJ SECOR037.GDT 6/9/16

| | |
|---|---|
| PROJECT: **Grayson Power Plant - Phase II ESA**<br>LOCATION: **800 Airway, Glendale, CA**<br>PROJECT NUMBER: **2057123300** | WELL / PROBEHOLE / BOREHOLE NO:<br>**SB-3** PAGE 3 OF 3 |
| DRILLING: STARTED: **4/28/2016** COMPLETED: **4/28/2016**<br>INSTALLATION: STARTED: **4/28/2016** COMPLETED: **4/28/2016**<br>DRILLING COMPANY: **Core Probe International**<br>DRILLING EQUIPMENT: **Geo Probe 7822 DT**<br>DRILLING METHOD: **HA/Direct Push**<br>SAMPLING EQUIPMENT: **Acetate Liners/Terracores/Jars** | NORTHING (ft): EASTING (ft):<br>LATITUDE: LONGITUDE:<br>GROUND ELEV (ft): TOC ELEV (ft):<br>INITIAL DTW (ft): **44** BOREHOLE DEPTH (ft): **50.0**<br>STATIC DTW (ft): **46.3** WELL DEPTH (ft): **NA**<br>WELL CASING DIAMETER (in): **NA** BOREHOLE DIAMETER (in): **2.25**<br>LOGGED BY: **J. Sargent** CHECKED BY: **A. Sawant** |

| Time & Depth (feet) | Graphic Log | USCS | Description | Sample | Time Sample ID | Measured Recov. (feet) | Blow Count/ft | Headspace PID (ppm) | Depth (feet) |
|---|---|---|---|---|---|---|---|---|---|
| 45 | | SM | | | 0743 SB-3-GW | | | 0.0 | 45 |
| | | | Same as above, trace fine to coarse gravel | | | | | | |
| 50 | | | Borehole terminated at 50 feet bgs. | | | | | | 50 |
| 55 | | | | | | | | | 55 |
| 60 | | | | | | | | | 60 |
| 65 | | | | | | | | | 65 |

GEO FORM 304_SECOR037 20160602_GINT_GRAYSON_SB-1_THROUGH_SB-16.GPJ SECOR037.GDT 6/9/16

| | |
|---|---|
| PROJECT: **Grayson Power Plant - Phase II ESA**<br>LOCATION: **800 Airway, Glendale, CA**<br>PROJECT NUMBER: **2057123300** | WELL / PROBEHOLE / BOREHOLE NO:<br>**SB-4** PAGE 1 OF 2 |
| DRILLING: STARTED: **4/29/2016** COMPLETED: **4/29/2016**<br>INSTALLATION: STARTED: **4/29/2016** COMPLETED: **4/29/2016**<br>DRILLING COMPANY: **Core Probe International**<br>DRILLING EQUIPMENT: **Geo Probe 7822 DT**<br>DRILLING METHOD: **Direct Push**<br>SAMPLING EQUIPMENT: **Acetate Liners/Terracores/Jars** | NORTHING (ft): EASTING (ft):<br>LATITUDE: LONGITUDE:<br>GROUND ELEV (ft): TOC ELEV (ft):<br>INITIAL DTW (ft): **NE** BOREHOLE DEPTH (ft): **40.0**<br>STATIC DTW (ft): **NE** WELL DEPTH (ft): **NA**<br>WELL CASING DIAMETER (in): **NA** BOREHOLE DIAMETER (in): **2.25**<br>LOGGED BY: **J. Sargent** CHECKED BY: **A. Sawant** |

| Time & Depth (feet) | Graphic Log | USCS | Description | Sample | Time Sample ID | Measured Recov. (feet) | Blow Count/ft | Headspace PID (ppm) | Depth (feet) |
|---|---|---|---|---|---|---|---|---|---|
| | | | 4" Asphalt | | | | | | |
| | | SM | SM; Silty SAND, dark yellowish brown (10YR 4/4), fine to coarse-grained sand, some fines, wet (adjacent to cooling tower pond), no hydrocarbon (HC) odor, no staining | ■ ■ | 0820 SB-4-1 | | | 0.0 | |
| 5 | | | Same as above | | -- -- | | | 0.0 | 5 |
| | | | Color change to dark brown (10YR 3/3), minor brick and asphalt fragments | | | | | | |
| 10 | | | Minor brick and asphalt fragments | ■ ■ | 0858 SB-4-10 | | | 0.0 | 10 |
| | | | Large rock at 11.5' bgs<br>Same as above | | | | | | |
| | | | Color change to dark yellowish brown (10YR 4/6) | | | | | | |
| 15 | | | Same as above, trace coarse gravel | | -- -- | | | 0.0 | 15 |
| 20 | | | Same as above, fine to med.-grained sand, no gravel | ■ ■ | 0904 SB-4-20 | | | 1.5 | 20 |

| | |
|---|---|
| PROJECT: **Grayson Power Plant - Phase II ESA**<br>LOCATION: **800 Airway, Glendale, CA**<br>PROJECT NUMBER: **2057123300** | WELL / PROBEHOLE / BOREHOLE NO:<br>**SB-4** PAGE 2 OF 2 |
| DRILLING: STARTED: **4/29/2016** COMPLETED: **4/29/2016**<br>INSTALLATION: STARTED: **4/29/2016** COMPLETED: **4/29/2016**<br>DRILLING COMPANY: **Core Probe International**<br>DRILLING EQUIPMENT: **Geo Probe 7822 DT**<br>DRILLING METHOD: **Direct Push**<br>SAMPLING EQUIPMENT: **Acetate Liners/Terracores/Jars** | NORTHING (ft): EASTING (ft):<br>LATITUDE: LONGITUDE:<br>GROUND ELEV (ft): TOC ELEV (ft):<br>INITIAL DTW (ft): **NE** BOREHOLE DEPTH (ft): **40.0**<br>STATIC DTW (ft): **NE** WELL DEPTH (ft): **NA**<br>WELL CASING DIAMETER (in): **NA** BOREHOLE DIAMETER (in): **2.25**<br>LOGGED BY: **J. Sargent** CHECKED BY: **A. Sawant** |

| Time & Depth (feet) | Graphic Log | USCS | Description | Sample | Time Sample ID | Measured Recov. (feet) | Blow Count/ft | Headspace PID (ppm) | Depth (feet) |
|---|---|---|---|---|---|---|---|---|---|
| | | SM | | | | | | | |
| | | | | | -- -- | | | 0.1 | |
| 25 | | | Same as above, fine-grained sand | | | | | | 25 |
| | | | | | -- -- | | | 0.0 | |
| 30 | | ML | Same as above<br>ML; Sandy SILT, olive brown (2.5Y 4/6), some fine-grained sand, non-plastic fines, moist, no HC odor, no staining | | | | | | 30 |
| | | SM | SM; Silty SAND, light olive brown (2.5Y 5/3), fine-grained sand, some fines, moist, no HC odor or staining | | | | | | |
| 35 | | | | ■ | -- -- | | | 0.1 | 35 |
| | | ML | ML; Sandy SILT, olive brown (2.5Y 4/6), some fine-grained sand, non-plastic fines, moist, no HC odor, no staining | | | | | | |
| | | SM | SM; Silty SAND, light olive brown (2.5Y 5/3), fine-grained sand, some fines, moist, no HC odor or staining | | | | | | |
| 40 | | | Borehole terminated at 40 feet bgs. | | | | | | 40 |

| | |
|---|---|
| PROJECT: **Grayson Power Plant - Phase II ESA**<br>LOCATION: **800 Airway, Glendale, CA**<br>PROJECT NUMBER: **2057123300** | WELL / PROBEHOLE / BOREHOLE NO:<br>**SB-5** PAGE 1 OF 3 |
| DRILLING: STARTED: **4/28/2016** COMPLETED: **4/28/2016**<br>INSTALLATION: STARTED: **4/28/2016** COMPLETED: **4/28/2016**<br>DRILLING COMPANY: **Core Probe International**<br>DRILLING EQUIPMENT: **Geo Probe 7822 DT**<br>DRILLING METHOD: **Direct Push**<br>SAMPLING EQUIPMENT: **Acetate Liners/Terracores/Jars** | NORTHING (ft): EASTING (ft):<br>LATITUDE: LONGITUDE:<br>GROUND ELEV (ft): TOC ELEV (ft):<br>INITIAL DTW (ft): **42** BOREHOLE DEPTH (ft): **50.0**<br>STATIC DTW (ft): **44.6** WELL DEPTH (ft): **NA**<br>WELL CASING DIAMETER (in): **NA** BOREHOLE DIAMETER (in): **2.25**<br>LOGGED BY: **J. Sargent** CHECKED BY: **A. Sawant** |

| Time & Depth (feet) | Graphic Log | USCS | Description | Sample | Time Sample ID | Measured Recov. (feet) | Blow Count/ft | Headspace PID (ppm) | Depth (feet) |
|---|---|---|---|---|---|---|---|---|---|
| | | | 4" Asphalt | | | | | | |
| | | SM | SM; Silty SAND with Gravel; dark olive brown (2.5Y 3/3), fine to coarse-grained sand, fine to coarse gravel, some fines, asphalt fragments abundant, moist, no hydrocarbon (HC) odor, no staining, appears to be fill material as noted by all debris | | 0826 SB-5-1 | | | 0.1 | |
| | | | Some glass fragments observed | | -- -- | | | 0.7 | |
| 5 | | | | | | | | | 5 |
| | | | Same as above, minor asphalt fragments observed | | | | | | |
| | | | Glass fragments observed | | 0840 SB-5-10 | | | 1.1 | |
| 10 | | | | | | | | | 10 |
| | | | Same as above | | | | | | |
| | | | Color change to olive brown (2.5Y 4/4) | | -- -- | | | 2.6 | |
| 15 | | | | | | | | | 15 |
| | | | Same as above, minor asphalt fragments observed | | 0848 SB-5-20 | | | 6.1 | |
| 20 | | | | | | | | | 20 |
| | | SM | SM; Silty SAND with Gravel, light olive brown (2.5Y 5/3), fine to coarse-grained sand, some fines, moist, fine to coarse gravel, no HC odor, no staining | | | | | | |

GEO FORM 304_SECOR037 20160602_GINT_GRAYSON_SB-1_THROUGH_SB-16.GPJ SECOR037.GDT 6/9/16

| | |
|---|---|
| PROJECT: **Grayson Power Plant - Phase II ESA**<br>LOCATION: **800 Airway, Glendale, CA**<br>PROJECT NUMBER: **2057123300** | WELL / PROBEHOLE / BOREHOLE NO:<br>**SB-5** PAGE 2 OF 3 |
| DRILLING: STARTED: **4/28/2016** COMPLETED: **4/28/2016**<br>INSTALLATION: STARTED: **4/28/2016** COMPLETED: **4/28/2016**<br>DRILLING COMPANY: **Core Probe International**<br>DRILLING EQUIPMENT: **Geo Probe 7822 DT**<br>DRILLING METHOD: **Direct Push**<br>SAMPLING EQUIPMENT: **Acetate Liners/Terracores/Jars** | NORTHING (ft): EASTING (ft):<br>LATITUDE: LONGITUDE:<br>GROUND ELEV (ft): TOC ELEV (ft):<br>INITIAL DTW (ft): **42** BOREHOLE DEPTH (ft): **50.0**<br>STATIC DTW (ft): **44.6** WELL DEPTH (ft): **NA**<br>WELL CASING DIAMETER (in): **NA** BOREHOLE DIAMETER (in): **2.25**<br>LOGGED BY: **J. Sargent** CHECKED BY: **A. Sawant** |

| Time & Depth (feet) | Graphic Log | USCS | Description | Sample | Time Sample ID | Measured Recov. (feet) | Blow Count/ft | Headspace PID (ppm) | Depth (feet) |
|---|---|---|---|---|---|---|---|---|---|
| | | SM | | | | | | | |
| | | | | | -- -- | | | 4.9 | |
| 25 | | | Same as above | | | | | | 25 |
| | | | Same as above | | 0857 SB-5-30 | | | 5.5 | |
| 30 | | | | | | | | | 30 |
| | | ML | ML; Sandy SILT, brown (7.5YR 4/3), some fine-graine sand, non-plastic fines, moist, slight oxidation, no HC odor, no staining | | | | | | |
| | | SW-SM | SW-SM; Well graded SAND with Silt, grayish brown (2.5Y 5/2), fine to coarse-grained sand, little fines, moist, no HC odor | | | | | | |
| | | | | | -- -- | | | 3.9 | |
| 35 | | | | | | | | | 35 |
| | | | Limited recovery | | | | | | |
| 40 | | | | | | | | | 40 |
| | | SM | SM; Silty SAND, very dark grayish brown (2.5Y 3/2), fine-grained sand, some fines, wet at 42' bgs, no HC odor, no staining | | 1110 SB-5-GW | | | | ▽ |

PROJECT: **Grayson Power Plant - Phase II ESA**
LOCATION: **800 Airway, Glendale, CA**
PROJECT NUMBER: **2057123300**

WELL / PROBEHOLE / BOREHOLE NO: **SB-5** PAGE 3 OF 3

Stantec

DRILLING: STARTED: **4/28/2016** COMPLETED: **4/28/2016**
INSTALLATION: STARTED: **4/28/2016** COMPLETED: **4/28/2016**
DRILLING COMPANY: **Core Probe International**
DRILLING EQUIPMENT: **Geo Probe 7822 DT**
DRILLING METHOD: **Direct Push**
SAMPLING EQUIPMENT: **Acetate Liners/Terracores/Jars**

NORTHING (ft):
EASTING (ft):
LATITUDE:
LONGITUDE:
GROUND ELEV (ft):
TOC ELEV (ft):
INITIAL DTW (ft): **42**
BOREHOLE DEPTH (ft): **50.0**
STATIC DTW (ft): **44.6**
WELL DEPTH (ft): **NA**
WELL CASING DIAMETER (in): **NA**
BOREHOLE DIAMETER (in): **2.25**
LOGGED BY: **J. Sargent**
CHECKED BY: **A. Sawant**

| Time & Depth (feet) | Graphic Log | USCS | Description | Sample | Time Sample ID | Measured Recov. (feet) | Blow Count/ft | Headspace PID (ppm) | Depth (feet) |
|---|---|---|---|---|---|---|---|---|---|
| 45 | | SM | Heaving sand conditions, sand entered drilling rods when refracting sampler | | | | | | 45 |
| | | | Well Graded SAND, olive (5Y 4/3), fine to coarse-grained sand, trace fines, wet, no HC odor, no staining | | | | | | |
| 50 | | | Borehole terminated at 50 feet bgs. | | | | | | 50 |
| 55 | | | | | | | | | 55 |
| 60 | | | | | | | | | 60 |
| 65 | | | | | | | | | 65 |

PROJECT: **Grayson Power Plant - Phase II ESA**
LOCATION: **800 Airway, Glendale, CA**
PROJECT NUMBER: **2057123300**

WELL / PROBEHOLE / BOREHOLE NO: **SB-6** PAGE 1 OF 2

Stantec

DRILLING: STARTED: **4/27/2016** COMPLETED: **4/27/2016**
INSTALLATION: STARTED: **4/27/2016** COMPLETED: **4/27/2016**
DRILLING COMPANY: **Core Probe International**
DRILLING EQUIPMENT: **Geo Probe 7822 DT**
DRILLING METHOD: **Direct Push**
SAMPLING EQUIPMENT: **Acetate Liners/Terracores/Jars**

NORTHING (ft): EASTING (ft):
LATITUDE: LONGITUDE:
GROUND ELEV (ft): TOC ELEV (ft):
INITIAL DTW (ft): **NE** BOREHOLE DEPTH (ft): **40.0**
STATIC DTW (ft): **NE** WELL DEPTH (ft): **NA**
WELL CASING DIAMETER (in): **NA** BOREHOLE DIAMETER (in): **2.25**
LOGGED BY: **J. Sargent** CHECKED BY: **A. Sawant**

| Time & Depth (feet) | Graphic Log | USCS | Description | Sample | Time Sample ID | Measured Recov. (feet) | Blow Count/ft | Headspace PID (ppm) | Depth (feet) | Well Construction |
|---|---|---|---|---|---|---|---|---|---|---|
| | | | 4" Asphalt | | | | | | | |
| | | SM | SM; Silty SAND with Gravel, brown (10YR 4/3), fine to coarse-grained sand, some fine to coarse gravel, some fines, wet (adjacent to cooling tower pond), no hydrocarbon (HC) odor, no staining | ■ | 1104 SB-6-1 | | | 0.2 | | Bentonite grout |
| | | | Refusal at 2.5' bgs, very large rocks, stepping out to south<br>Step out boring encountered conduit at 2.5' bgs | | | | | | | |
| | | | Wire, brick, glass, spark plug in upper 5' | | -- -- | | | 0.0 | | Bentonite chips<br>#3 sand |
| 5 | | | | | | | | | 5 | 10" Stainless steel vapor implant |
| | | | Minor screen staining observed | | | | | | | |
| | | | Asphalt fragments with glass observed | | | | | | | |
| | | | | ■ | 1240 SB-6-10 | | | 18.5 | | |
| 10 | | | Same as above, asphalt fragments observed | | | | | | 10 | Bentonite grout |
| | | | | ■ | 1242 SB-6-15 | | | 1.4 | | Bentonite chips<br>#3 sand |
| 15 | | | Slight staining from asphalt, glass fragments, fill material | | | | | | 15 | 10" Stainless steel vapor implant<br>#3 sand |
| | | SM | SM; Native, no debris, soil appears uniform and undisturbed. Silty SAND, brown (7.5YR 4/4), fine to med.-grained sand, some fines, moist, no HC odor, no staining | | -- -- | | | 1.8 | | |
| | | | | | -- -- | | | 1.7 | | |
| 20 | | | | | | | | | 20 | |

GEO FORM 304_SECOR037 20160602_GINT_GRAYSON_SB-1_THROUGH_SB-16.GPJ SECOR037.GDT 6/9/16

| | |
|---|---|
| PROJECT: **Grayson Power Plant - Phase II ESA**<br>LOCATION: **800 Airway, Glendale, CA**<br>PROJECT NUMBER: **2057123300** | WELL / PROBEHOLE / BOREHOLE NO:<br>**SB-6** PAGE 2 OF 2 |
| DRILLING: STARTED: **4/27/2016** COMPLETED: **4/27/2016**<br>INSTALLATION: STARTED: **4/27/2016** COMPLETED: **4/27/2016**<br>DRILLING COMPANY: **Core Probe International**<br>DRILLING EQUIPMENT: **Geo Probe 7822 DT**<br>DRILLING METHOD: **Direct Push**<br>SAMPLING EQUIPMENT: **Acetate Liners/Terracores/Jars** | NORTHING (ft): EASTING (ft):<br>LATITUDE: LONGITUDE:<br>GROUND ELEV (ft): TOC ELEV (ft):<br>INITIAL DTW (ft): **NE** BOREHOLE DEPTH (ft): **40.0**<br>STATIC DTW (ft): **NE** WELL DEPTH (ft): **NA**<br>WELL CASING DIAMETER (in): **NA** BOREHOLE DIAMETER (in): **2.25**<br>LOGGED BY: **J. Sargent** CHECKED BY: **A. Sawant** |

| Time & Depth (feet) | Graphic Log | USCS | Description | Sample | Time Sample ID | Measured Recov. (feet) | Blow Count/ft | Headspace PID (ppm) | Depth (feet) | Well Construction |
|---|---|---|---|---|---|---|---|---|---|---|
| | | SM | | | | | | | | Bentonite grout |
| | | ML | ML; Sandy SILT, brown (7.5YR 4/3), some fine-grained sand, non to low plasticity fines, moist, no hydrocarbon (HC) odor, no staining | | | | | | | |
| | | CL | CL; Lean CLAY, brown (7.5YR 4/2), trace fine-grained sand, med. to high plasticity fines, moist, no HC odor, no staining | | -- -- | | | 2.1 | | |
| 25 | | | | | | | | | 25 | |
| | | | | | | | | | | Bentonite chips<br>#3 sand |
| | | SC | SC; Clayey SAND, brown (7.5YR 4/3), fine to med.-grained sand, some med. plasticity fines, moist, no HC odor, no staining | | -- -- | | | 2.3 | | |
| 30 | | | | | | | | | 30 | 10" Stainless steel vapor implant |
| | | SM | SM; Silty SAND, brown (7.5YR 4/3), fine to med.-grained sand, some non plastic fines, moist, no HC odor, no staining | | | | | | | |
| | | SP-SM | SP-SM; Poorly Graded SAND with Silt, brown (10YR 5/3), fine-grained sand, little fines, moist, no HC odor, no staining | | 1251 SB-6-35 | | | 2.5 | | |
| 35 | | | | | | | | | 35 | |
| | | SM | SM; Silty SAND, brown (7.5YR 4/3), fine to med.-grained sand, some fines, moist, no HC odor, no staining<br><br>Same as above, trace fine gravel | | | | | | | |
| 40 | | | Borehole terminated at 40 feet bgs. | | | | | | 40 | |

| | |
|---|---|
| PROJECT: **Grayson Power Plant - Phase II ESA**<br>LOCATION: **800 Airway, Glendale, CA**<br>PROJECT NUMBER: **2057123300** | WELL / PROBEHOLE / BOREHOLE NO:<br>**SB-7** PAGE 1 OF 2 |
| DRILLING: STARTED: **4/27/2016** COMPLETED: **4/27/2016**<br>INSTALLATION: STARTED: **4/27/2016** COMPLETED: **4/27/2016**<br>DRILLING COMPANY: **Core Probe International**<br>DRILLING EQUIPMENT: **Geo Probe 7822 DT**<br>DRILLING METHOD: **Direct Push**<br>SAMPLING EQUIPMENT: **Acetate Liners/Terracores/Jars** | NORTHING (ft): EASTING (ft):<br>LATITUDE: LONGITUDE:<br>GROUND ELEV (ft): TOC ELEV (ft):<br>INITIAL DTW (ft): **NE** BOREHOLE DEPTH (ft): **40.0**<br>STATIC DTW (ft): **NE** WELL DEPTH (ft): **NA**<br>WELL CASING DIAMETER (in): **NA** BOREHOLE DIAMETER (in): **2.25**<br>LOGGED BY: **J. Sargent** CHECKED BY: **A. Sawant** |

| Time & Depth (feet) | Graphic Log | USCS | Description | Sample | Time Sample ID | Measured Recov. (feet) | Blow Count/ft | Headspace PID (ppm) | Depth (feet) |
|---|---|---|---|---|---|---|---|---|---|
| | | | 4" Asphalt | | | | | | |
| | | SM | SM; Silty SAND with Gravel, brown (10YR 4/3), fine to coarse-grained sand, some fine to coarse gravel, some fines, wet (adjacent to cooling tower pond), no hydrocarbon (HC) odor, no staining | | 1134 SB-7-1 | | | 0.1 | |
| | | | | | -- -- | | | 0.2 | |
| 5 | | | Same as above | | | | | | 5 |
| | | | Very dark staining, black (7.5YR 2.5/1), faint HC odor | | -- -- | | | 0.2 | |
| | | | No staining, no odor, brown (7.5YR 4/3) | | 1335 SB-7-10 | | | 0.4 | |
| 10 | | | | | | | | | 10 |
| | | | Heavy staining, very dark gray (7.5YR 3/1), slight HC odor | | | | | | |
| | | | | | 1337 SB-7-15 | | | 2.3 | |
| 15 | | | Black (7.5YR 2.5/1) | | | | | | 15 |
| | | | | | -- -- | | | 1.8 | |
| | | | | | -- -- | | | 0.6 | |
| 20 | | | Light staining, appears to be fill material | | | | | | 20 |
| | | SM | SM; Silty SAND, light olive brown (2.5Y 5/3), fine-grained sand, some fines, moist, no HC odor, no staining, no fill material observed | | | | | | |

| | |
|---|---|
| PROJECT: **Grayson Power Plant - Phase II ESA**<br>LOCATION: **800 Airway, Glendale, CA**<br>PROJECT NUMBER: **2057123300** | WELL / PROBEHOLE / BOREHOLE NO:<br>**SB-7** PAGE 2 OF 2 |
| DRILLING: STARTED: **4/27/2016** COMPLETED: **4/27/2016**<br>INSTALLATION: STARTED: **4/27/2016** COMPLETED: **4/27/2016**<br>DRILLING COMPANY: **Core Probe International**<br>DRILLING EQUIPMENT: **Geo Probe 7822 DT**<br>DRILLING METHOD: **Direct Push**<br>SAMPLING EQUIPMENT: **Acetate Liners/Terracores/Jars** | NORTHING (ft): EASTING (ft):<br>LATITUDE: LONGITUDE:<br>GROUND ELEV (ft): TOC ELEV (ft):<br>INITIAL DTW (ft): **NE** BOREHOLE DEPTH (ft): **40.0**<br>STATIC DTW (ft): **NE** WELL DEPTH (ft): **NA**<br>WELL CASING DIAMETER (in): **NA** BOREHOLE DIAMETER (in): **2.25**<br>LOGGED BY: **J. Sargent** CHECKED BY: **A. Sawant** |

| Time & Depth (feet) | Graphic Log | USCS | Description | Sample | Time Sample ID | Measured Recov. (feet) | Blow Count/ft | Headspace PID (ppm) | Depth (feet) |
|---|---|---|---|---|---|---|---|---|---|
| | | SM | | | -- -- | | | 0.3 | |
| 25 | | | | | | | | | 25 |
| | | ML | ML; Sandy SILT, olive brown (2.5Y 4/4), some fine-grained sand, non-plastic fines, moist, no HC odor, no staining | | | | | | |
| | | SM | SM; Silty SAND, light olive brown (2.5Y 5/3), fine-grained sand, some fines, moist, no HC odor, no staining | | -- -- | | | 0.3 | |
| 30 | | | | | | | | | 30 |
| 35 | | SP-SM | SP-SM; Poorly Graded SAND with Silt, light yellowish brown (2.5Y 6/4), fine-grained sand, little fines, moist, no HC odor, no staining | | 1350 SB-7-35 | | | 0.2 | 35 |
| | | SM | SM; Silty SAND, light olive brown (2.5Y 5/3), fine-grained sand, some fines, moist, no HC odor, no staining | | -- -- | | | 0.2 | |
| 40 | | | Borehole terminated at 40 feet bgs. | | | | | | 40 |

PROJECT: **Grayson Power Plant - Phase II ESA**
LOCATION: **800 Airway, Glendale, CA**
PROJECT NUMBER: **2057123300**

WELL / PROBEHOLE / BOREHOLE NO: **SB-8** PAGE 1 OF 2

Stantec

DRILLING: STARTED: **4/27/2016** COMPLETED: **4/27/2016**
INSTALLATION: STARTED: **4/27/2016** COMPLETED: **4/27/2016**
DRILLING COMPANY: **Core Probe International**
DRILLING EQUIPMENT: **Geo Probe 7822 DT**
DRILLING METHOD: **Direct Push**
SAMPLING EQUIPMENT: **Acetate Liners/Terracores/Jars**

NORTHING (ft):
EASTING (ft):
LATITUDE:
LONGITUDE:
GROUND ELEV (ft):
TOC ELEV (ft):
INITIAL DTW (ft): **NE**
BOREHOLE DEPTH (ft): **40.0**
STATIC DTW (ft): **NE**
WELL DEPTH (ft): **NA**
WELL CASING DIAMETER (in): **NA**
BOREHOLE DIAMETER (in): **2.25**
LOGGED BY: **J. Sargent**
CHECKED BY: **A. Sawant**

| Time & Depth (feet) | Graphic Log | USCS | Description | Sample | Time Sample ID | Measured Recov. (feet) | Blow Count/ft | Headspace PID (ppm) | Depth (feet) | Well Construction |
|---|---|---|---|---|---|---|---|---|---|---|
| | | | 4" Asphalt | | | | | | | |
| | | SM | SM; Silty SAND, dark grayish brown (2.5Y 4/2), fine to med.-grained sand, some fines, wet (boring is adjacent to cooling water pond), no hydrocarbon (HC) odor, no staining | ■ | 0837 SB-8-1 | | | 0.3 | | Bentonite grout |
| | | | | | -- -- | | | 1.3 | | Bentonite chips; #3 sand |
| 5 | | | Same as above, trace fine gravel | | | | | | 5 | 10" Stainless steel vapor implant |
| | | | | | -- -- | | | 9.6 | | |
| 10 | | | Same as above, varying percentage of fine-grained sand from trace to little, moist | | | | | | 10 | Bentonite grout |
| | | | | | -- -- | | | 10.2 | | Bentonite chips; #3 sand |
| 15 | | | | | | | | | 15 | 10" Stainless steel vapor implant; #3 sand |
| | | | | ■ | 0924 SB-8-20 | | | 15.8 | | |
| 20 | | | | | | | | | 20 | |

| | |
|---|---|
| PROJECT: **Grayson Power Plant - Phase II ESA**<br>LOCATION: **800 Airway, Glendale, CA**<br>PROJECT NUMBER: **2057123300** | WELL / PROBEHOLE / BOREHOLE NO:<br>**SB-8** PAGE 2 OF 2 |
| DRILLING: STARTED: **4/27/2016** COMPLETED: **4/27/2016**<br>INSTALLATION: STARTED: **4/27/2016** COMPLETED: **4/27/2016**<br>DRILLING COMPANY: **Core Probe International**<br>DRILLING EQUIPMENT: **Geo Probe 7822 DT**<br>DRILLING METHOD: **Direct Push**<br>SAMPLING EQUIPMENT: **Acetate Liners/Terracores/Jars** | NORTHING (ft): EASTING (ft):<br>LATITUDE: LONGITUDE:<br>GROUND ELEV (ft): TOC ELEV (ft):<br>INITIAL DTW (ft): **NE** BOREHOLE DEPTH (ft): **40.0**<br>STATIC DTW (ft): **NE** WELL DEPTH (ft): **NA**<br>WELL CASING DIAMETER (in): **NA** BOREHOLE DIAMETER (in): **2.25**<br>LOGGED BY: **J. Sargent** CHECKED BY: **A. Sawant** |

| Time & Depth (feet) | Graphic Log | USCS | Description | Sample | Time Sample ID | Measured Recov. (feet) | Blow Count/ft | Headspace PID (ppm) | Depth (feet) | Well Construction |
|---|---|---|---|---|---|---|---|---|---|---|
| | | SM | SM; Silty SAND with Gravel, brown (10YR 4/3), some fine to coarse gravel, med. to coarse-grained sand, some fines, moist, no HC odor, no staining | | | | | | | Bentonite grout |
| 25 | | SW-SM | SW-SM; Well Graded SAND with Silt, light olive brown (12.5Y 5/3), fine to coarse-grained sand, trace fine gravel, little fines, moist<br>At 24.5' bgs, strong HC odor, some HC staining | | 0925<br>SB-8-25 | | | 136 | 25 | |
| | | SP-SM | SP-SM; Poorly Graded SAND, light olive brown (2.5Y 5/4), fine-grained sand, little fines, moist, no HC odor, no staining | | | | | | | |
| | | ML | ML; Sandy SILT, brown (10YR 4/3), some very fine-grained sand, non to low plasticity fines, moist, no HC odor, no staining | | | | | | | Bentonite chips<br>#3 sand |
| 30 | | SM | SM; Silty SAND, brown (10YR 4/3), fine to med.-grained sand, some fines, moist, no HC odor, no staining | | --<br>-- | | | 12.7 | 30 | 10" Stainless steel vapor implant |
| 35 | | | Becomes light olive brown (2.5Y 5/4), fine to med.-grained sand, trace fine gravel | | --<br>-- | | | 3.2 | 35 | |
| | | | Increase in gravel | | | | | | | |
| 40 | | | Borehole terminated at 40 feet bgs. | | 0944<br>SB-8-40 | | | 10.8 | 40 | |

| | |
|---|---|
| PROJECT: **Grayson Power Plant - Phase II ESA**<br>LOCATION: **800 Airway, Glendale, CA**<br>PROJECT NUMBER: **2057123300** | WELL / PROBEHOLE / BOREHOLE NO:<br>**SB-9** PAGE 1 OF 3 |
| DRILLING: STARTED: **4/28/2016** COMPLETED: **4/28/2016**<br>INSTALLATION: STARTED: **4/28/2016** COMPLETED: **4/28/2016**<br>DRILLING COMPANY: **Core Probe International**<br>DRILLING EQUIPMENT: **Geo Probe 7822 DT**<br>DRILLING METHOD: **Direct Push**<br>SAMPLING EQUIPMENT: **Acetate Liners/Terracores/Jars** | NORTHING (ft): EASTING (ft):<br>LATITUDE: LONGITUDE:<br>GROUND ELEV (ft): TOC ELEV (ft):<br>INITIAL DTW (ft): **41** BOREHOLE DEPTH (ft): **50.0**<br>STATIC DTW (ft): **42.67** WELL DEPTH (ft): **NA**<br>WELL CASING DIAMETER (in): **NA** BOREHOLE DIAMETER (in): **2.25**<br>LOGGED BY: **J. Sargent** CHECKED BY: **A. Sawant** |

| Time & Depth (feet) | Graphic Log | USCS | Description | Sample | Time Sample ID | Measured Recov. (feet) | Blow Count/ft | Headspace PID (ppm) | Depth (feet) |
|---|---|---|---|---|---|---|---|---|---|
| | | | 4" Asphalt | | | | | | |
| | | SM | SM; Silty SAND with Gravel; very dark brown (10YR 2/2), some fine to coarse-grained sand, some fine to coarse gravel, some asphalt fragments, no HC odor, no staining | | 1131 SB-9-1 | | | 0.6 | |
| 5 | | | | | 1145 SB-9-5 | | | 1.3 | 5 |
| | | | Color change to dark yellowish brown (10YR 4/4) | | | | | | |
| | | | Asphalt fragments, appears to be fill, non-native | | | | | | |
| 10 | | | | | 1150 SB-9-10 | | | 1.8 | 10 |
| 15 | | | No recovery, very hard drilling, many rocks observed, sample liner melted | | -- -- | | | 1.2 | 15 |
| 20 | | | At 20' bgs, native | | | | | | 20 |
| | | SP-SM | SP-SM; Poorly Graded SAND with Silt, brown (10YR 5/3), fine-grained sand, trace coarse-grained sand, little fines, moist, no asphalt fragments, no HC odor, no staining, appears native | | | | | | |

GEO FORM 304_SECOR037 20160602_GINT_GRAYSON_SB-1_THROUGH_SB-16.GPJ SECOR037.GDT 6/9/16

| | |
|---|---|
| PROJECT: **Grayson Power Plant - Phase II ESA**<br>LOCATION: **800 Airway, Glendale, CA**<br>PROJECT NUMBER: **2057123300** | WELL / PROBEHOLE / BOREHOLE NO:<br>**SB-9** PAGE 2 OF 3 |
| DRILLING: STARTED: **4/28/2016** COMPLETED: **4/28/2016**<br>INSTALLATION: STARTED: **4/28/2016** COMPLETED: **4/28/2016**<br>DRILLING COMPANY: **Core Probe International**<br>DRILLING EQUIPMENT: **Geo Probe 7822 DT**<br>DRILLING METHOD: **Direct Push**<br>SAMPLING EQUIPMENT: **Acetate Liners/Terracores/Jars** | NORTHING (ft): EASTING (ft):<br>LATITUDE: LONGITUDE:<br>GROUND ELEV (ft): TOC ELEV (ft):<br>INITIAL DTW (ft): **41** BOREHOLE DEPTH (ft): **50.0**<br>STATIC DTW (ft): **42.67** WELL DEPTH (ft): **NA**<br>WELL CASING DIAMETER (in): **NA** BOREHOLE DIAMETER (in): **2.25**<br>LOGGED BY: **J. Sargent** CHECKED BY: **A. Sawant** |

| Time & Depth (feet) | Graphic Log | USCS | Description | Sample | Time Sample ID | Measured Recov. (feet) | Blow Count/ft | Headspace PID (ppm) | Depth (feet) |
|---|---|---|---|---|---|---|---|---|---|
| | | SP-SM | | | | | | | |
| | | | | | 1210 SB-9-25 | | | 0.3 | |
| 25 | | | | | | | | | 25 |
| | | | | | -- -- | | | 0.5 | |
| 30 | | | | | | | | | 30 |
| | | | | | -- -- | | | 0.3 | |
| 35 | | | | | | | | | 35 |
| | | SC | SC; Clayey SAND, dark yellowish brown (10YR 3/4), fine to med.-grained sand, some fines, moist, no HC odor, no staining | | | | | | |
| | | | | | -- -- | | | 0.3 | |
| 40 | | SM | SM; Silty SAND, dark yellowish brown (10YR 3/4), fine to med.-grained sand, some fines, moist, no HC odor, no staining | | | | | | 40 |
| | | | | | 1244 SB-9-GW | | | | |
| | | CL | CL; Lean CLAY, brown (10YR 4/4), trace fine-grained sand, low | | | | | | |

| | |
|---|---|
| PROJECT: **Grayson Power Plant - Phase II ESA**<br>LOCATION: **800 Airway, Glendale, CA**<br>PROJECT NUMBER: **2057123300** | WELL / PROBEHOLE / BOREHOLE NO:<br>**SB-9** PAGE 3 OF 3 |
| DRILLING: STARTED: **4/28/2016** COMPLETED: **4/28/2016**<br>INSTALLATION: STARTED: **4/28/2016** COMPLETED: **4/28/2016**<br>DRILLING COMPANY: **Core Probe International**<br>DRILLING EQUIPMENT: **Geo Probe 7822 DT**<br>DRILLING METHOD: **Direct Push**<br>SAMPLING EQUIPMENT: **Acetate Liners/Terracores/Jars** | NORTHING (ft): EASTING (ft):<br>LATITUDE: LONGITUDE:<br>GROUND ELEV (ft): TOC ELEV (ft):<br>INITIAL DTW (ft): **41** BOREHOLE DEPTH (ft): **50.0**<br>STATIC DTW (ft): **42.67** WELL DEPTH (ft): **NA**<br>WELL CASING DIAMETER (in): **NA** BOREHOLE DIAMETER (in): **2.25**<br>LOGGED BY: **J. Sargent** CHECKED BY: **A. Sawant** |

| Time & Depth (feet) | Graphic Log | USCS | Description | Sample | Time Sample ID | Measured Recov. (feet) | Blow Count/ft | Headspace PID (ppm) | Depth (feet) |
|---|---|---|---|---|---|---|---|---|---|
| | | CL | plasticity fines, wet, no HC odor, no staining | | | | | | |
| 45 | | SM | SM; Silty SAND, dark brown (7.5YR 3/4), heaving sands, fine to med.-grained sand, some fines, wet, no HC odor, no staining | | | | | | 45 |
| | | CL | CL; Lean CLAY, dark brown (10YR 4/3), some fine-grained sand, med. plasticity fines, wet, no HC odor, no staining | | | | | | |
| | | SW-SM | SW-SM; Well Graded SAND with Silt, brown (10YR 4/3), fine to coarse-grained sand, some fines, wet, no HC odor, no staining | | | | | | |
| 50 | | | Borehole terminated at 50 feet bgs. | | | | | | 50 |
| 55 | | | | | | | | | 55 |
| 60 | | | | | | | | | 60 |
| 65 | | | | | | | | | 65 |

# Appendix B
# LOS ANGELES COUNTY DEPARTMENT OF ENVIRONMENTAL HEALTH PERMIT

# ENVIRONMENTAL HEALTH

## Drinking Water Program

5050 Commerce Drive, Baldwin Park, CA 91706
Telephone: (626) 430-5420 • Facsimile: (626) 813-3013 • Email: vgallegos@ph.lacounty.gov
http://publichealth.lacounty.gov/eh/ep/dw/dw_main.htm

# SR0067222
# 800 Air Way Glendale 91201 Work Plan Approval

**TO BE COMPLETED BY APPLICANT:**

| WORK SITE ADDRESS | CITY | ZIP | EMAIL ADDRESS FOR WELL PERMIT APPROVAL |
|---|---|---|---|
| 800 Air Way | Glendale | 91201 | Anuya.sawant@statntec.com |

**NOTICE:**

- WORK PLAN APPROVALS ARE VALID FOR 180 DAYS. 30 DAY EXTENSIONS OF WORK PLAN APPROVALS ARE CONSIDERED ON AN INDIVIDUAL (CASE-BY-CASE) BASIS AND MAY BE SUBJECT TO ADDITIONAL PLAN REVIEW FEES (HOURLY RATE AS APPLICABLE).
- WORK PLAN MODIFICATIONS MAY BE REQUIRED IF WELL AND GEOLOGIC CONDITIONS ENCOUNTERED AT THE SITE INSPECTION ARE FOUND TO DIFFER FROM THE SCOPE OF WORK PRESENTED TO THE DEPARTMENT OF PUBLIC HEALTH—DRINKING WATER PROGRAM.
- WORK PLAN APPROVALS ARE LIMITED TO COMPLIANCE WITH THE CALIFORNIA WELL STANDARDS AND THE LOS ANGELES COUNTY CODE AND DOES NOT GRANT ANY RIGHTS TO CONSTRUCT, RENOVATE, OR DECOMMISSION ANY WELL. THE APPLICANT IS RESPONSIBLE FOR SECURING ALL OTHER NECESSARY PERMITS SUCH AS WATER RIGHTS, PROPERTY RIGHTS, COASTAL COMMISSION APPROVALS, USE COVENANTS, ENCROACHMENT PERMISSIONS, UTILITY LINE SETBACKS, CITY/COUNTY PUBLIC WORKS RIGHTS OF WAY, ETC.
- ALL FIELD WORK MUST BE CONDUCTED UNDER THE DIRECT SUPERVISION OF A PROFESSIONAL GEOLOGIST LICENSED IN THE STATE OF CALIFORNIA.
- THIS PERMIT IS NOT COMPLETE UNTIL ALL OF THE FOLLOWING REQUIREMENTS ARE SIGNED BY THE DEPUTY HEALTH OFFICER. WORK SHALL NOT BE INITIATED WITHOUT A WORK PLAN APPROVAL STAMPED BY THE DEPARTMENT OF PUBLIC HEALTH—DRINKING WATER PROGRAM.
- ***RESUBMIT THE REQUEST VIA MY EMAIL AT: vgallegos@ph.lacounty.gov***

**TO BE COMPLETED BY DEPARTMENT OF PUBLIC HEALTH—DRINKING WATER PROGRAM:**

X WORK PLAN APPROVED: 16 boring installations DATE: April 25, 2016

ADDITIONAL APPROVAL CONDITIONS:

- Please provide/ verify project dates and time via my email listed above this comment box
- Assure backfill within 72 hours.

Vincent Gallegos R.E.H.S.
Drinking Water Program
vgallegos@ph.lacounty.gov

# Appendix C
# LABORATORY ANALYTICAL RESULTS AND CHAIN OF CUSTODY

9765 Eton Avenue
Chatsworth
California 91311
Tel: (818) 998-5547
Fax: (818) 998-7258

May 10, 2016

Anuya Sawant

Stantec (TO)

290 Conejo Ridge Ave. Suite #200

Thousand Oaks, CA 91361

**Re : Grayson Power Plant Glendale Phase II / 2057123300**

**A732172 / 6D26016**

Enclosed is an analytical report for the above-referenced project. The samples included in this report were received on 04/26/16 14:56 and analyzed in accordance with the attached chain-of-custody.

Unless otherwise noted, all analytical testing was accomplished in accordance with the guidelines established in our Quality Assurance Program Manual, applicable standard operating procedures, and other related documentation. The results in this analytical report are limited to the samples tested and any reproduction thereof must be made in its entirety.

If you have any questions regarding this report or require additional information please call me at American Analytics.

Sincerely,

Viorel Vasile

Operations Manager

# LABORATORY ANALYSIS RESULTS

**Client:** Stantec (TO)
**Project No:** 2057123300
**Project Name:** Grayson Power Plant Glendale Phase II

**AA Project No:** A732172
**Date Received:** 04/26/16
**Date Reported:** 05/10/16

| Sample ID | Laboratory ID | Matrix | TAT | Date Sampled | Date Received |
|---|---|---|---|---|---|
| **7199 Hexavalent Chromium by IC - Low Level** | | | | | |
| SB-14-15 | 6D26016-03 | Soil | 7 | 04/26/16 11:30 | 04/26/16 14:56 |
| SB-15-11 | 6D26016-06 | Soil | 7 | 04/26/16 10:43 | 04/26/16 14:56 |
| SB-16-11 | 6D26016-09 | Soil | 7 | 04/26/16 10:01 | 04/26/16 14:56 |
| **8260B/5035 +OXY+TPHG** | | | | | |
| SB-14-5 | 6D26016-02 | Soil | 7 | 04/26/16 11:08 | 04/26/16 14:56 |
| SB-14-15 | 6D26016-03 | Soil | 7 | 04/26/16 11:30 | 04/26/16 14:56 |
| SB-15-5 | 6D26016-05 | Soil | 7 | 04/26/16 10:33 | 04/26/16 14:56 |
| SB-15-11 | 6D26016-06 | Soil | 7 | 04/26/16 10:43 | 04/26/16 14:56 |
| SB-16-5 | 6D26016-08 | Soil | 7 | 04/26/16 08:11 | 04/26/16 14:56 |
| SB-16-11 | 6D26016-09 | Soil | 7 | 04/26/16 10:01 | 04/26/16 14:56 |
| **CAM Metals Less Hg 6000/7000** | | | | | |
| SB-14-1 | 6D26016-01 | Soil | 7 | 04/26/16 08:30 | 04/26/16 14:56 |
| SB-15-1 | 6D26016-04 | Soil | 7 | 04/26/16 06:57 | 04/26/16 14:56 |
| SB-16-1 | 6D26016-07 | Soil | 7 | 04/26/16 07:57 | 04/26/16 14:56 |
| SB-12-1 | 6D26016-10 | Soil | 7 | 04/26/16 13:09 | 04/26/16 14:56 |
| **Carbon Chain Characterization 8015M** | | | | | |
| SB-14-5 | 6D26016-02 | Soil | 7 | 04/26/16 11:08 | 04/26/16 14:56 |

**Viorel Vasile**
Operations Manager

# LABORATORY ANALYSIS RESULTS

**Client:** Stantec (TO)
**Project No:** 2057123300
**Project Name:** Grayson Power Plant Glendale Phase II

**AA Project No:** A732172
**Date Received:** 04/26/16
**Date Reported:** 05/10/16

| Sample ID | Laboratory ID | Matrix | TAT | Date Sampled | Date Received |
|---|---|---|---|---|---|
| SB-14-15 | 6D26016-03 | Soil | 7 | 04/26/16 11:30 | 04/26/16 14:56 |
| SB-15-5 | 6D26016-05 | Soil | 7 | 04/26/16 10:33 | 04/26/16 14:56 |
| SB-15-11 | 6D26016-06 | Soil | 7 | 04/26/16 10:43 | 04/26/16 14:56 |
| SB-16-5 | 6D26016-08 | Soil | 7 | 04/26/16 08:11 | 04/26/16 14:56 |
| SB-16-11 | 6D26016-09 | Soil | 7 | 04/26/16 10:01 | 04/26/16 14:56 |
| **Mercury Total EPA 7470A/7471A** | | | | | |
| SB-14-1 | 6D26016-01 | Soil | 7 | 04/26/16 08:30 | 04/26/16 14:56 |
| SB-15-1 | 6D26016-04 | Soil | 7 | 04/26/16 06:57 | 04/26/16 14:56 |
| SB-16-1 | 6D26016-07 | Soil | 7 | 04/26/16 07:57 | 04/26/16 14:56 |
| SB-12-1 | 6D26016-10 | Soil | 7 | 04/26/16 13:09 | 04/26/16 14:56 |

**Viorel Vasile**
Operations Manager

# LABORATORY ANALYSIS RESULTS

**Client:** Stantec (TO)
**Project No:** 2057123300
**Project Name:** Grayson Power Plant Glendale Phase II
**Method:** Cations by Ion Chromatography

**AA Project No:** A732172
**Date Received:** 04/26/16
**Date Reported:** 05/10/16

| AA I.D. No. | Client I.D. No. | Sampled | Prepared | Analyzed | Dilution | Result | Units | MRL |
|---|---|---|---|---|---|---|---|---|
| **7199 Hexavalent Chromium by IC - Low Level (EPA 7199)** | | | | | | | | |
| 6D26016-03 | SB-14-15 | 04/26/16 | 04/29/16 | 04/29/16 | 1 | <0.040 | mg/kg | 0.04 |
| 6D26016-06 | SB-15-11 | 04/26/16 | 04/29/16 | 04/29/16 | 1 | <0.040 | mg/kg | 0.04 |
| 6D26016-09 | SB-16-11 | 04/26/16 | 04/29/16 | 04/29/16 | 1 | <0.040 | mg/kg | 0.04 |

**Viorel Vasile**
Operations Manager

# LABORATORY ANALYSIS RESULTS

**Client:** Stantec (TO)
**Project No:** 2057123300
**Project Name:** Grayson Power Plant Glendale Phase II
**Method:** VOCs, OXY & TPHG by GC/MS EPA 5035

**AA Project No:** A732172
**Date Received:** 04/26/16
**Date Reported:** 05/10/16
**Units:** mg/kg

| | | | | | |
|---|---|---|---|---|---|
| **Date Sampled:** | 04/26/16 | 04/26/16 | 04/26/16 | 04/26/16 | |
| **Date Prepared:** | 04/28/16 | 04/28/16 | 04/28/16 | 04/28/16 | |
| **Date Analyzed:** | 04/28/16 | 04/28/16 | 04/28/16 | 04/28/16 | |
| **AA ID No:** | 6D26016-02 | 6D26016-03 | 6D26016-05 | 6D26016-06 | |
| **Client ID No:** | SB-14-5 | SB-14-15 | SB-15-5 | SB-15-11 | |
| **Matrix:** | Soil | Soil | Soil | Soil | |
| **Dilution Factor:** | 1 | 1 | 1 | 1 | MRL |
| **8260B/5035 +OXY+TPHG (EPA 8260B/5035)** | | | | | |
| Acetone | <0.050 | <0.050 | <0.050 | <0.050 | 0.050 |
| tert-Amyl Methyl Ether (TAME) | <0.0050 | <0.0050 | <0.0050 | <0.0050 | 0.0050 |
| Benzene | <0.0020 | <0.0020 | <0.0020 | <0.0020 | 0.0020 |
| Bromobenzene | <0.0050 | <0.0050 | <0.0050 | <0.0050 | 0.0050 |
| Bromochloromethane | <0.0050 | <0.0050 | <0.0050 | <0.0050 | 0.0050 |
| Bromodichloromethane | <0.0050 | <0.0050 | <0.0050 | <0.0050 | 0.0050 |
| Bromoform | <0.0050 | <0.0050 | <0.0050 | <0.0050 | 0.0050 |
| Bromomethane | <0.0050 | <0.0050 | <0.0050 | <0.0050 | 0.0050 |
| 2-Butanone (MEK) | <0.050 | <0.050 | <0.050 | <0.050 | 0.050 |
| tert-Butyl alcohol (TBA) | <0.020 | <0.020 | <0.020 | <0.020 | 0.020 |
| sec-Butylbenzene | <0.0050 | <0.0050 | <0.0050 | <0.0050 | 0.0050 |
| tert-Butylbenzene | <0.0050 | <0.0050 | <0.0050 | <0.0050 | 0.0050 |
| n-Butylbenzene | <0.0050 | <0.0050 | <0.0050 | <0.0050 | 0.0050 |
| Carbon Disulfide | <0.0050 | <0.0050 | <0.0050 | <0.0050 | 0.0050 |
| Carbon Tetrachloride | <0.0050 | <0.0050 | <0.0050 | <0.0050 | 0.0050 |
| Chlorobenzene | <0.0050 | <0.0050 | <0.0050 | <0.0050 | 0.0050 |
| Chloroethane | <0.0050 | <0.0050 | <0.0050 | <0.0050 | 0.0050 |
| Chloroform | <0.0050 | <0.0050 | <0.0050 | <0.0050 | 0.0050 |
| Chloromethane | <0.0050 | <0.0050 | <0.0050 | <0.0050 | 0.0050 |
| 2-Chlorotoluene | <0.0050 | <0.0050 | <0.0050 | <0.0050 | 0.0050 |
| 4-Chlorotoluene | <0.0050 | <0.0050 | <0.0050 | <0.0050 | 0.0050 |
| 1,2-Dibromo-3-chloropropane | <0.010 | <0.010 | <0.010 | <0.010 | 0.010 |
| Dibromochloromethane | <0.0050 | <0.0050 | <0.0050 | <0.0050 | 0.0050 |
| 1,2-Dibromoethane (EDB) | <0.0050 | <0.0050 | <0.0050 | <0.0050 | 0.0050 |
| Dibromomethane | <0.0050 | <0.0050 | <0.0050 | <0.0050 | 0.0050 |
| 1,4-Dichlorobenzene | <0.0050 | <0.0050 | <0.0050 | <0.0050 | 0.0050 |
| 1,3-Dichlorobenzene | <0.0050 | <0.0050 | <0.0050 | <0.0050 | 0.0050 |

**Viorel Vasile**
Operations Manager

# LABORATORY ANALYSIS RESULTS

**Client:** Stantec (TO)
**Project No:** 2057123300
**Project Name:** Grayson Power Plant Glendale Phase II
**Method:** VOCs, OXY & TPHG by GC/MS EPA 5035

**AA Project No:** A732172
**Date Received:** 04/26/16
**Date Reported:** 05/10/16
**Units:** mg/kg

| | | | | | |
|---|---|---|---|---|---|
| **Date Sampled:** | 04/26/16 | 04/26/16 | 04/26/16 | 04/26/16 | |
| **Date Prepared:** | 04/28/16 | 04/28/16 | 04/28/16 | 04/28/16 | |
| **Date Analyzed:** | 04/28/16 | 04/28/16 | 04/28/16 | 04/28/16 | |
| **AA ID No:** | 6D26016-02 | 6D26016-03 | 6D26016-05 | 6D26016-06 | |
| **Client ID No:** | SB-14-5 | SB-14-15 | SB-15-5 | SB-15-11 | |
| **Matrix:** | Soil | Soil | Soil | Soil | |
| **Dilution Factor:** | 1 | 1 | 1 | 1 | MRL |
| **8260B/5035 +OXY+TPHG (EPA 8260B/5035) (continued)** | | | | | |
| 1,2-Dichlorobenzene | <0.0050 | <0.0050 | <0.0050 | <0.0050 | 0.0050 |
| Dichlorodifluoromethane (R12) | <0.0050 | <0.0050 | <0.0050 | <0.0050 | 0.0050 |
| 1,1-Dichloroethane | <0.0050 | <0.0050 | <0.0050 | <0.0050 | 0.0050 |
| 1,2-Dichloroethane (EDC) | <0.0050 | <0.0050 | <0.0050 | <0.0050 | 0.0050 |
| trans-1,2-Dichloroethylene | <0.0050 | <0.0050 | <0.0050 | <0.0050 | 0.0050 |
| cis-1,2-Dichloroethylene | <0.0050 | <0.0050 | <0.0050 | <0.0050 | 0.0050 |
| 1,1-Dichloroethylene | <0.0050 | <0.0050 | <0.0050 | <0.0050 | 0.0050 |
| 2,2-Dichloropropane | <0.0050 | <0.0050 | <0.0050 | <0.0050 | 0.0050 |
| 1,3-Dichloropropane | <0.0050 | <0.0050 | <0.0050 | <0.0050 | 0.0050 |
| 1,2-Dichloropropane | <0.0050 | <0.0050 | <0.0050 | <0.0050 | 0.0050 |
| trans-1,3-Dichloropropylene | <0.0050 | <0.0050 | <0.0050 | <0.0050 | 0.0050 |
| 1,1-Dichloropropylene | <0.0050 | <0.0050 | <0.0050 | <0.0050 | 0.0050 |
| cis-1,3-Dichloropropylene | <0.0050 | <0.0050 | <0.0050 | <0.0050 | 0.0050 |
| Diisopropyl ether (DIPE) | <0.0050 | <0.0050 | <0.0050 | <0.0050 | 0.0050 |
| Ethylbenzene | <0.0020 | <0.0020 | <0.0020 | <0.0020 | 0.0020 |
| Ethyl-tert-Butyl Ether (ETBE) | <0.0050 | <0.0050 | <0.0050 | <0.0050 | 0.0050 |
| Gasoline Range Organics (GRO) | <0.50 | <0.50 | <0.50 | <0.50 | 0.50 |
| Hexachlorobutadiene | <0.010 | <0.010 | <0.010 | <0.010 | 0.010 |
| 2-Hexanone (MBK) | <0.050 | <0.050 | <0.050 | <0.050 | 0.050 |
| Isopropylbenzene | <0.0050 | <0.0050 | <0.0050 | <0.0050 | 0.0050 |
| 4-Isopropyltoluene | <0.0050 | <0.0050 | <0.0050 | <0.0050 | 0.0050 |
| Methyl-tert-Butyl Ether (MTBE) | <0.0050 | <0.0050 | <0.0050 | <0.0050 | 0.0050 |
| Methylene Chloride | <0.050 | <0.050 | <0.050 | <0.050 | 0.050 |
| 4-Methyl-2-pentanone (MIBK) | <0.050 | <0.050 | <0.050 | <0.050 | 0.050 |
| Naphthalene | <0.010 | <0.010 | <0.010 | <0.010 | 0.010 |
| n-Propylbenzene | <0.0050 | <0.0050 | <0.0050 | <0.0050 | 0.0050 |

**Viorel Vasile**
Operations Manager

# LABORATORY ANALYSIS RESULTS

**Client:** Stantec (TO)
**Project No:** 2057123300
**Project Name:** Grayson Power Plant Glendale Phase II
**Method:** VOCs, OXY & TPHG by GC/MS EPA 5035

**AA Project No:** A732172
**Date Received:** 04/26/16
**Date Reported:** 05/10/16
**Units:** mg/kg

| | | | | | |
|---|---|---|---|---|---|
| **Date Sampled:** | 04/26/16 | 04/26/16 | 04/26/16 | 04/26/16 | |
| **Date Prepared:** | 04/28/16 | 04/28/16 | 04/28/16 | 04/28/16 | |
| **Date Analyzed:** | 04/28/16 | 04/28/16 | 04/28/16 | 04/28/16 | |
| **AA ID No:** | 6D26016-02 | 6D26016-03 | 6D26016-05 | 6D26016-06 | |
| **Client ID No:** | SB-14-5 | SB-14-15 | SB-15-5 | SB-15-11 | |
| **Matrix:** | Soil | Soil | Soil | Soil | |
| **Dilution Factor:** | 1 | 1 | 1 | 1 | MRL |
| **8260B/5035 +OXY+TPHG (EPA 8260B/5035) (continued)** | | | | | |
| Styrene | <0.0050 | <0.0050 | <0.0050 | <0.0050 | 0.0050 |
| 1,1,1,2-Tetrachloroethane | <0.0050 | <0.0050 | <0.0050 | <0.0050 | 0.0050 |
| 1,1,2,2-Tetrachloroethane | <0.0050 | <0.0050 | <0.0050 | <0.0050 | 0.0050 |
| Tetrachloroethylene (PCE) | <0.0050 | <0.0050 | <0.0050 | <0.0050 | 0.0050 |
| Toluene | <0.0020 | <0.0020 | <0.0020 | <0.0020 | 0.0020 |
| 1,2,4-Trichlorobenzene | <0.0050 | <0.0050 | <0.0050 | <0.0050 | 0.0050 |
| 1,2,3-Trichlorobenzene | <0.0050 | <0.0050 | <0.0050 | <0.0050 | 0.0050 |
| 1,1,2-Trichloroethane | <0.0050 | <0.0050 | <0.0050 | <0.0050 | 0.0050 |
| 1,1,1-Trichloroethane | <0.0050 | <0.0050 | <0.0050 | <0.0050 | 0.0050 |
| Trichloroethylene (TCE) | <0.0050 | <0.0050 | <0.0050 | <0.0050 | 0.0050 |
| Trichlorofluoromethane (R11) | <0.0050 | <0.0050 | <0.0050 | <0.0050 | 0.0050 |
| 1,2,3-Trichloropropane | <0.0050 | <0.0050 | <0.0050 | <0.0050 | 0.0050 |
| 1,1,2-Trichloro-1,2,2-trifluoroethane (R113) | <0.0050 | <0.0050 | <0.0050 | <0.0050 | 0.0050 |
| 1,3,5-Trimethylbenzene | <0.0050 | <0.0050 | <0.0050 | <0.0050 | 0.0050 |
| 1,2,4-Trimethylbenzene | <0.0050 | <0.0050 | <0.0050 | <0.0050 | 0.0050 |
| Vinyl chloride | <0.0050 | <0.0050 | <0.0050 | <0.0050 | 0.0050 |
| o-Xylene | <0.0020 | <0.0020 | <0.0020 | <0.0020 | 0.0020 |
| m,p-Xylenes | <0.0020 | <0.0020 | <0.0020 | <0.0020 | 0.0020 |
| **Surrogates** | | | | | **%REC Limits** |
| 4-Bromofluorobenzene | 104% | 108% | 111% | 109% | 70-140 |
| Dibromofluoromethane | 119% | 108% | 116% | 116% | 70-140 |
| Toluene-d8 | 102% | 103% | 104% | 104% | 70-140 |

**Viorel Vasile**
Operations Manager

# LABORATORY ANALYSIS RESULTS

**Client:** Stantec (TO)
**Project No:** 2057123300
**Project Name:** Grayson Power Plant Glendale Phase II
**Method:** VOCs, OXY & TPHG by GC/MS EPA 5035

**AA Project No:** A732172
**Date Received:** 04/26/16
**Date Reported:** 05/10/16
**Units:** mg/kg

| | | | |
|---|---|---|---|
| **Date Sampled:** | 04/26/16 | 04/26/16 | |
| **Date Prepared:** | 04/28/16 | 04/28/16 | |
| **Date Analyzed:** | 04/28/16 | 04/28/16 | |
| **AA ID No:** | 6D26016-08 | 6D26016-09 | |
| **Client ID No:** | SB-16-5 | SB-16-11 | |
| **Matrix:** | Soil | Soil | |
| **Dilution Factor:** | 1 | 1 | MRL |
| **8260B/5035 +OXY+TPHG (EPA 8260B/5035)** | | | |
| Acetone | <0.050 | <0.050 | 0.050 |
| tert-Amyl Methyl Ether (TAME) | <0.0050 | <0.0050 | 0.0050 |
| Benzene | <0.0020 | <0.0020 | 0.0020 |
| Bromobenzene | <0.0050 | <0.0050 | 0.0050 |
| Bromochloromethane | <0.0050 | <0.0050 | 0.0050 |
| Bromodichloromethane | <0.0050 | <0.0050 | 0.0050 |
| Bromoform | <0.0050 | <0.0050 | 0.0050 |
| Bromomethane | <0.0050 | <0.0050 | 0.0050 |
| 2-Butanone (MEK) | <0.050 | <0.050 | 0.050 |
| tert-Butyl alcohol (TBA) | <0.020 | <0.020 | 0.020 |
| sec-Butylbenzene | <0.0050 | <0.0050 | 0.0050 |
| tert-Butylbenzene | <0.0050 | <0.0050 | 0.0050 |
| n-Butylbenzene | <0.0050 | <0.0050 | 0.0050 |
| Carbon Disulfide | <0.0050 | <0.0050 | 0.0050 |
| Carbon Tetrachloride | <0.0050 | <0.0050 | 0.0050 |
| Chlorobenzene | <0.0050 | <0.0050 | 0.0050 |
| Chloroethane | <0.0050 | <0.0050 | 0.0050 |
| Chloroform | <0.0050 | <0.0050 | 0.0050 |
| Chloromethane | <0.0050 | <0.0050 | 0.0050 |
| 2-Chlorotoluene | <0.0050 | <0.0050 | 0.0050 |
| 4-Chlorotoluene | <0.0050 | <0.0050 | 0.0050 |
| 1,2-Dibromo-3-chloropropane | <0.010 | <0.010 | 0.010 |
| Dibromochloromethane | <0.0050 | <0.0050 | 0.0050 |
| 1,2-Dibromoethane (EDB) | <0.0050 | <0.0050 | 0.0050 |
| Dibromomethane | <0.0050 | <0.0050 | 0.0050 |
| 1,4-Dichlorobenzene | <0.0050 | <0.0050 | 0.0050 |
| 1,3-Dichlorobenzene | <0.0050 | <0.0050 | 0.0050 |

**Viorel Vasile**
Operations Manager

# LABORATORY ANALYSIS RESULTS

**Client:** Stantec (TO)
**Project No:** 2057123300
**Project Name:** Grayson Power Plant Glendale Phase II
**Method:** VOCs, OXY & TPHG by GC/MS EPA 5035

**AA Project No:** A732172
**Date Received:** 04/26/16
**Date Reported:** 05/10/16
**Units:** mg/kg

| | | | |
|---|---|---|---|
| **Date Sampled:** | 04/26/16 | 04/26/16 | |
| **Date Prepared:** | 04/28/16 | 04/28/16 | |
| **Date Analyzed:** | 04/28/16 | 04/28/16 | |
| **AA ID No:** | 6D26016-08 | 6D26016-09 | |
| **Client ID No:** | SB-16-5 | SB-16-11 | |
| **Matrix:** | Soil | Soil | |
| **Dilution Factor:** | 1 | 1 | MRL |
| **8260B/5035 +OXY+TPHG (EPA 8260B/5035) (continued)** | | | |
| 1,2-Dichlorobenzene | <0.0050 | <0.0050 | 0.0050 |
| Dichlorodifluoromethane (R12) | <0.0050 | <0.0050 | 0.0050 |
| 1,1-Dichloroethane | <0.0050 | <0.0050 | 0.0050 |
| 1,2-Dichloroethane (EDC) | <0.0050 | <0.0050 | 0.0050 |
| trans-1,2-Dichloroethylene | <0.0050 | <0.0050 | 0.0050 |
| cis-1,2-Dichloroethylene | <0.0050 | <0.0050 | 0.0050 |
| 1,1-Dichloroethylene | <0.0050 | <0.0050 | 0.0050 |
| 2,2-Dichloropropane | <0.0050 | <0.0050 | 0.0050 |
| 1,3-Dichloropropane | <0.0050 | <0.0050 | 0.0050 |
| 1,2-Dichloropropane | <0.0050 | <0.0050 | 0.0050 |
| trans-1,3-Dichloropropylene | <0.0050 | <0.0050 | 0.0050 |
| 1,1-Dichloropropylene | <0.0050 | <0.0050 | 0.0050 |
| cis-1,3-Dichloropropylene | <0.0050 | <0.0050 | 0.0050 |
| Diisopropyl ether (DIPE) | <0.0050 | <0.0050 | 0.0050 |
| Ethylbenzene | <0.0020 | <0.0020 | 0.0020 |
| Ethyl-tert-Butyl Ether (ETBE) | <0.0050 | <0.0050 | 0.0050 |
| Gasoline Range Organics (GRO) | <0.50 | <0.50 | 0.50 |
| Hexachlorobutadiene | <0.010 | <0.010 | 0.010 |
| 2-Hexanone (MBK) | <0.050 | <0.050 | 0.050 |
| Isopropylbenzene | <0.0050 | <0.0050 | 0.0050 |
| 4-Isopropyltoluene | <0.0050 | <0.0050 | 0.0050 |
| Methyl-tert-Butyl Ether (MTBE) | <0.0050 | <0.0050 | 0.0050 |
| Methylene Chloride | <0.050 | <0.050 | 0.050 |
| 4-Methyl-2-pentanone (MIBK) | <0.050 | <0.050 | 0.050 |
| Naphthalene | <0.010 | <0.010 | 0.010 |
| n-Propylbenzene | <0.0050 | <0.0050 | 0.0050 |

**Viorel Vasile**
Operations Manager

# LABORATORY ANALYSIS RESULTS

**Client:** Stantec (TO)
**Project No:** 2057123300
**Project Name:** Grayson Power Plant Glendale Phase II
**Method:** VOCs, OXY & TPHG by GC/MS EPA 5035

**AA Project No:** A732172
**Date Received:** 04/26/16
**Date Reported:** 05/10/16
**Units:** mg/kg

| | | | |
|---|---|---|---|
| **Date Sampled:** | 04/26/16 | 04/26/16 | |
| **Date Prepared:** | 04/28/16 | 04/28/16 | |
| **Date Analyzed:** | 04/28/16 | 04/28/16 | |
| **AA ID No:** | 6D26016-08 | 6D26016-09 | |
| **Client ID No:** | SB-16-5 | SB-16-11 | |
| **Matrix:** | Soil | Soil | |
| **Dilution Factor:** | 1 | 1 | MRL |
| **8260B/5035 +OXY+TPHG (EPA 8260B/5035) (continued)** | | | |
| Styrene | <0.0050 | <0.0050 | 0.0050 |
| 1,1,1,2-Tetrachloroethane | <0.0050 | <0.0050 | 0.0050 |
| 1,1,2,2-Tetrachloroethane | <0.0050 | <0.0050 | 0.0050 |
| Tetrachloroethylene (PCE) | <0.0050 | <0.0050 | 0.0050 |
| Toluene | <0.0020 | <0.0020 | 0.0020 |
| 1,2,4-Trichlorobenzene | <0.0050 | <0.0050 | 0.0050 |
| 1,2,3-Trichlorobenzene | <0.0050 | <0.0050 | 0.0050 |
| 1,1,2-Trichloroethane | <0.0050 | <0.0050 | 0.0050 |
| 1,1,1-Trichloroethane | <0.0050 | <0.0050 | 0.0050 |
| Trichloroethylene (TCE) | <0.0050 | <0.0050 | 0.0050 |
| Trichlorofluoromethane (R11) | <0.0050 | <0.0050 | 0.0050 |
| 1,2,3-Trichloropropane | <0.0050 | <0.0050 | 0.0050 |
| 1,1,2-Trichloro-1,2,2-trifluoroethane (R113) | <0.0050 | <0.0050 | 0.0050 |
| 1,3,5-Trimethylbenzene | <0.0050 | <0.0050 | 0.0050 |
| 1,2,4-Trimethylbenzene | <0.0050 | <0.0050 | 0.0050 |
| Vinyl chloride | <0.0050 | <0.0050 | 0.0050 |
| o-Xylene | <0.0020 | <0.0020 | 0.0020 |
| m,p-Xylenes | <0.0020 | <0.0020 | 0.0020 |
| **Surrogates** | | | **%REC Limits** |
| 4-Bromofluorobenzene | 111% | 115% | 70-140 |
| Dibromofluoromethane | 119% | 115% | 70-140 |
| Toluene-d8 | 103% | 110% | 70-140 |

**Viorel Vasile**
Operations Manager

# LABORATORY ANALYSIS RESULTS

**Client:** Stantec (TO)
**Project No:** 2057123300
**Project Name:** Grayson Power Plant Glendale Phase II
**Method:** Carbon Chain by GC/FID

**AA Project No:** A732172
**Date Received:** 04/26/16
**Date Reported:** 05/10/16
**Units:** mg/kg

| | | | | | |
|---|---|---|---|---|---|
| **Date Sampled:** | 04/26/16 | 04/26/16 | 04/26/16 | 04/26/16 | |
| **Date Prepared:** | 04/28/16 | 04/28/16 | 04/28/16 | 04/28/16 | |
| **Date Analyzed:** | 04/29/16 | 04/29/16 | 04/29/16 | 04/29/16 | |
| **AA ID No:** | 6D26016-02 | 6D26016-03 | 6D26016-05 | 6D26016-06 | |
| **Client ID No:** | SB-14-5 | SB-14-15 | SB-15-5 | SB-15-11 | |
| **Matrix:** | Soil | Soil | Soil | Soil | |
| **Dilution Factor:** | 1 | 1 | 1 | 1 | MRL |
| **Carbon Chain Characterization 8015M (EPA 8015M)** | | | | | |
| C6-C8 | <1.0 | <1.0 | <1.0 | <1.0 | 1.0 |
| C8-C10 | <1.0 | <1.0 | <1.0 | <1.0 | 1.0 |
| C10-C12 | <1.0 | <1.0 | <1.0 | <1.0 | 1.0 |
| C12-C14 | <1.0 | <1.0 | <1.0 | <1.0 | 1.0 |
| C14-C16 | <1.0 | <1.0 | <1.0 | <1.0 | 1.0 |
| C16-C18 | <1.0 | <1.0 | <1.0 | <1.0 | 1.0 |
| C18-C20 | <1.0 | <1.0 | <1.0 | <1.0 | 1.0 |
| C20-C22 | <1.0 | <1.0 | <1.0 | <1.0 | 1.0 |
| C22-C24 | <1.0 | <1.0 | <1.0 | <1.0 | 1.0 |
| C24-C26 | <1.0 | <1.0 | <1.0 | <1.0 | 1.0 |
| C26-C28 | <1.0 | <1.0 | <1.0 | <1.0 | 1.0 |
| C28-C32 | <1.0 | <1.0 | <1.0 | <1.0 | 1.0 |
| C32-C34 | <1.0 | <1.0 | <1.0 | <1.0 | 1.0 |
| C34-C36 | <1.0 | <1.0 | <1.0 | <1.0 | 1.0 |
| C36-C40 | <1.0 | <1.0 | <1.0 | <1.0 | 1.0 |
| C40-C44 | <1.0 | <1.0 | <1.0 | <1.0 | 1.0 |
| TPH (C6-C44) | <10 | <10 | <10 | <10 | 10 |
| **Surrogates** | | | | | **%REC Limits** |
| o-Terphenyl | 111% | 105% | 108% | 118% | 50-150 |

**Viorel Vasile**
Operations Manager

# LABORATORY ANALYSIS RESULTS

**Client:** Stantec (TO)
**Project No:** 2057123300
**Project Name:** Grayson Power Plant Glendale Phase II
**Method:** Carbon Chain by GC/FID

**AA Project No:** A732172
**Date Received:** 04/26/16
**Date Reported:** 05/10/16
**Units:** mg/kg

| | | | |
|---|---|---|---|
| **Date Sampled:** | 04/26/16 | 04/26/16 | |
| **Date Prepared:** | 04/28/16 | 04/28/16 | |
| **Date Analyzed:** | 04/29/16 | 04/29/16 | |
| **AA ID No:** | 6D26016-08 | 6D26016-09 | |
| **Client ID No:** | SB-16-5 | SB-16-11 | |
| **Matrix:** | Soil | Soil | |
| **Dilution Factor:** | 1 | 1 | MRL |
| **Carbon Chain Characterization 8015M (EPA 8015M)** | | | |
| C6-C8 | <1.0 | <1.0 | 1.0 |
| C8-C10 | <1.0 | <1.0 | 1.0 |
| C10-C12 | <1.0 | <1.0 | 1.0 |
| C12-C14 | <1.0 | <1.0 | 1.0 |
| C14-C16 | <1.0 | <1.0 | 1.0 |
| C16-C18 | <1.0 | <1.0 | 1.0 |
| C18-C20 | <1.0 | <1.0 | 1.0 |
| C20-C22 | <1.0 | <1.0 | 1.0 |
| C22-C24 | <1.0 | <1.0 | 1.0 |
| C24-C26 | <1.0 | <1.0 | 1.0 |
| C26-C28 | <1.0 | <1.0 | 1.0 |
| C28-C32 | <1.0 | <1.0 | 1.0 |
| C32-C34 | <1.0 | <1.0 | 1.0 |
| C34-C36 | <1.0 | <1.0 | 1.0 |
| C36-C40 | <1.0 | <1.0 | 1.0 |
| C40-C44 | <1.0 | <1.0 | 1.0 |
| TPH (C6-C44) | <10 | <10 | 10 |
| **Surrogates** | | | **%REC Limits** |
| o-Terphenyl | 111% | 105% | 50-150 |

**Viorel Vasile**
Operations Manager

# LABORATORY ANALYSIS RESULTS

**Client:** Stantec (TO)
**Project No:** 2057123300
**Project Name:** Grayson Power Plant Glendale Phase II
**Method:** Total Metals CAM 17

**AA Project No:** A732172
**Date Received:** 04/26/16
**Date Reported:** 05/10/16
**Units:** mg/kg

| | | | | | |
|---|---|---|---|---|---|
| **Date Sampled:** | 04/26/16 | 04/26/16 | 04/26/16 | 04/26/16 | |
| **Date Prepared:** | 04/27/16 | 04/27/16 | 04/27/16 | 04/27/16 | |
| **Date Analyzed:** | 05/03/16 | 05/03/16 | 05/03/16 | 05/03/16 | |
| **AA ID No:** | 6D26016-01 | 6D26016-04 | 6D26016-07 | 6D26016-10 | |
| **Client ID No:** | SB-14-1 | SB-15-1 | SB-16-1 | SB-12-1 | |
| **Matrix:** | Soil | Soil | Soil | Soil | |
| **Dilution Factor:** | 1 | 1 | 1 | 1 | MRL |
| **CAM Metals Less Hg 6000/7000 (EPA 6010B/7000)** | | | | | |
| Antimony | <10 | <10 | <10 | <10 | 10 |
| Arsenic | **3.6** | **1.6** | **1.8** | **3.0** | 0.50 |
| Barium | **130** | **98** | **80** | **230** | 10 |
| Beryllium | <1.0 | <1.0 | <1.0 | <1.0 | 1.0 |
| Cadmium | <1.0 | <1.0 | <1.0 | <1.0 | 1.0 |
| Chromium | **15** | **11** | **9.4** | **12** | 3.0 |
| Cobalt | **11** | **8.0** | **7.2** | **8.8** | 3.0 |
| Copper | **21** | **12** | **11** | **68** | 3.0 |
| Lead | **6.3** | <3.0 | <3.0 | **170** | 3.0 |
| Molybdenum | <5.0 | <5.0 | <5.0 | <5.0 | 5.0 |
| Nickel | **10** | **6.9** | **6.3** | **17** | 3.0 |
| Selenium | <0.50 | <0.50 | <0.50 | <0.50 | 0.50 |
| Silver | <1.0 | <1.0 | <1.0 | <1.0 | 1.0 |
| Thallium | <5.0 | <5.0 | <5.0 | <5.0 | 5.0 |
| Vanadium | **57** | **44** | **37** | **42** | 10 |
| Zinc | **72** | **53** | **62** | **260** | 3.0 |

**Viorel Vasile**
Operations Manager

# LABORATORY ANALYSIS RESULTS

**Client:** Stantec (TO)
**Project No:** 2057123300
**Project Name:** Grayson Power Plant Glendale Phase II
**Method:** Total Metals CAM 17

**AA Project No:** A732172
**Date Received:** 04/26/16
**Date Reported:** 05/10/16
**Units:** mg/kg

| | | | | | |
|---|---|---|---|---|---|
| **Date Sampled:** | 04/26/16 | 04/26/16 | 04/26/16 | 04/26/16 | |
| **Date Prepared:** | 04/27/16 | 04/27/16 | 04/27/16 | 04/27/16 | |
| **Date Analyzed:** | 04/28/16 | 04/28/16 | 04/28/16 | 04/28/16 | |
| **AA ID No:** | 6D26016-01 | 6D26016-04 | 6D26016-07 | 6D26016-10 | |
| **Client ID No:** | SB-14-1 | SB-15-1 | SB-16-1 | SB-12-1 | |
| **Matrix:** | Soil | Soil | Soil | Soil | |
| **Dilution Factor:** | 1 | 1 | 1 | 1 | MRL |
| **Mercury Total EPA 7470A/7471A (EPA 7471A)** | | | | | |
| Mercury | **0.12** | **0.078** | **0.042** | **0.12** | 0.020 |

**Viorel Vasile**
Operations Manager

# LABORATORY ANALYSIS RESULTS

**Client:** Stantec (TO)
**Project No:** 2057123300
**Project Name:** Grayson Power Plant Glendale Phase II

**AA Project No:** A732172
**Date Received:** 04/26/16
**Date Reported:** 05/10/16

| Analyte | Result | Reporting Limit | Units | Spike Level | Source Result | %REC | %REC Limits | RPD | RPD Limit | Notes |
|---|---|---|---|---|---|---|---|---|---|---|
| **Cations by Ion Chromatography - Quality Control** | | | | | | | | | | |
| *Batch B6D2904 - NO PREP* | | | | | | | | | | |
| **Blank (B6D2904-BLK1)** | | | | Prepared & Analyzed: 04/29/16 | | | | | | |
| Chromium (VI) | <0.040 | 0.040 | mg/kg | | | | | | | |
| **LCS (B6D2904-BS1)** | | | | Prepared & Analyzed: 04/29/16 | | | | | | |
| Chromium (VI) | **0.186** | 0.040 | mg/kg | 0.20 | | 93.1 | 80-120 | | | |
| **LCS Dup (B6D2904-BSD1)** | | | | Prepared & Analyzed: 04/29/16 | | | | | | |
| Chromium (VI) | **0.190** | 0.040 | mg/kg | 0.20 | | 95.0 | 80-120 | 2.02 | 20 | |
| **Duplicate (B6D2904-DUP1)** | | **Source: 6D26016-09** | | Prepared & Analyzed: 04/29/16 | | | | | | |
| Chromium (VI) | **<0.040** | 0.040 | mg/kg | | <0.040 | | | | 40 | |
| **Matrix Spike (B6D2904-MS1)** | | **Source: 6D27022-07** | | Prepared & Analyzed: 04/29/16 | | | | | | |
| Chromium (VI) | **0.211** | 0.040 | mg/kg | 0.20 | | 105 | 70-130 | | | |
| **Matrix Spike Dup (B6D2904-MSD1)** | | **Source: 6D27022-07** | | Prepared & Analyzed: 04/29/16 | | | | | | |
| Chromium (VI) | **0.209** | 0.040 | mg/kg | 0.20 | | 104 | 70-130 | 1.05 | 40 | |
| **VOCs, OXY & TPHG by GC/MS EPA 5035 - Quality Control** | | | | | | | | | | |
| *Batch B6D2841 - EPA 5035* | | | | | | | | | | |
| **Blank (B6D2841-BLK1)** | | | | Prepared & Analyzed: 04/28/16 | | | | | | |
| Acetone | <0.050 | 0.050 | mg/kg | | | | | | | |
| tert-Amyl Methyl Ether (TAME) | <0.0050 | 0.0050 | mg/kg | | | | | | | |
| Benzene | <0.0020 | 0.0020 | mg/kg | | | | | | | |
| Bromobenzene | <0.0050 | 0.0050 | mg/kg | | | | | | | |
| Bromochloromethane | <0.0050 | 0.0050 | mg/kg | | | | | | | |
| Bromodichloromethane | <0.0050 | 0.0050 | mg/kg | | | | | | | |
| Bromoform | <0.0050 | 0.0050 | mg/kg | | | | | | | |
| Bromomethane | <0.0050 | 0.0050 | mg/kg | | | | | | | |
| 2-Butanone (MEK) | <0.050 | 0.050 | mg/kg | | | | | | | |
| tert-Butyl alcohol (TBA) | <0.020 | 0.020 | mg/kg | | | | | | | |
| sec-Butylbenzene | <0.0050 | 0.0050 | mg/kg | | | | | | | |
| tert-Butylbenzene | <0.0050 | 0.0050 | mg/kg | | | | | | | |
| n-Butylbenzene | <0.0050 | 0.0050 | mg/kg | | | | | | | |
| Carbon Disulfide | <0.0050 | 0.0050 | mg/kg | | | | | | | |
| Carbon Tetrachloride | <0.0050 | 0.0050 | mg/kg | | | | | | | |
| Chlorobenzene | <0.0050 | 0.0050 | mg/kg | | | | | | | |

**Viorel Vasile**
Operations Manager

# LABORATORY ANALYSIS RESULTS

**Client:** Stantec (TO)
**Project No:** 2057123300
**Project Name:** Grayson Power Plant Glendale Phase II

**AA Project No:** A732172
**Date Received:** 04/26/16
**Date Reported:** 05/10/16

| Analyte | Result | Reporting Limit | Units | Spike Level | Source Result | %REC | %REC Limits | RPD | RPD Limit | Notes |
|---|---|---|---|---|---|---|---|---|---|---|
| **VOCs, OXY & TPHG by GC/MS EPA 5035 - Quality Control** | | | | | | | | | | |
| *Batch B6D2841 - EPA 5035* | | | | | | | | | | |
| **Blank (B6D2841-BLK1) Continued** | | | | Prepared & Analyzed: 04/28/16 | | | | | | |
| Chloroethane | <0.0050 | 0.0050 | mg/kg | | | | | | | |
| Chloroform | <0.0050 | 0.0050 | mg/kg | | | | | | | |
| Chloromethane | <0.0050 | 0.0050 | mg/kg | | | | | | | |
| 2-Chlorotoluene | <0.0050 | 0.0050 | mg/kg | | | | | | | |
| 4-Chlorotoluene | <0.0050 | 0.0050 | mg/kg | | | | | | | |
| 1,2-Dibromo-3-chloropropane | <0.010 | 0.010 | mg/kg | | | | | | | |
| Dibromochloromethane | <0.0050 | 0.0050 | mg/kg | | | | | | | |
| 1,2-Dibromoethane (EDB) | <0.0050 | 0.0050 | mg/kg | | | | | | | |
| Dibromomethane | <0.0050 | 0.0050 | mg/kg | | | | | | | |
| 1,4-Dichlorobenzene | <0.0050 | 0.0050 | mg/kg | | | | | | | |
| 1,3-Dichlorobenzene | <0.0050 | 0.0050 | mg/kg | | | | | | | |
| 1,2-Dichlorobenzene | <0.0050 | 0.0050 | mg/kg | | | | | | | |
| Dichlorodifluoromethane (R12) | <0.0050 | 0.0050 | mg/kg | | | | | | | |
| 1,1-Dichloroethane | <0.0050 | 0.0050 | mg/kg | | | | | | | |
| 1,2-Dichloroethane (EDC) | <0.0050 | 0.0050 | mg/kg | | | | | | | |
| trans-1,2-Dichloroethylene | <0.0050 | 0.0050 | mg/kg | | | | | | | |
| cis-1,2-Dichloroethylene | <0.0050 | 0.0050 | mg/kg | | | | | | | |
| 1,1-Dichloroethylene | <0.0050 | 0.0050 | mg/kg | | | | | | | |
| 2,2-Dichloropropane | <0.0050 | 0.0050 | mg/kg | | | | | | | |
| 1,3-Dichloropropane | <0.0050 | 0.0050 | mg/kg | | | | | | | |
| 1,2-Dichloropropane | <0.0050 | 0.0050 | mg/kg | | | | | | | |
| trans-1,3-Dichloropropylene | <0.0050 | 0.0050 | mg/kg | | | | | | | |
| 1,1-Dichloropropylene | <0.0050 | 0.0050 | mg/kg | | | | | | | |
| cis-1,3-Dichloropropylene | <0.0050 | 0.0050 | mg/kg | | | | | | | |
| Diisopropyl ether (DIPE) | <0.0050 | 0.0050 | mg/kg | | | | | | | |
| Ethylbenzene | <0.0020 | 0.0020 | mg/kg | | | | | | | |
| Ethyl-tert-Butyl Ether (ETBE) | <0.0050 | 0.0050 | mg/kg | | | | | | | |
| Gasoline Range Organics (GRO) | <0.50 | 0.50 | mg/kg | | | | | | | |
| Hexachlorobutadiene | <0.010 | 0.010 | mg/kg | | | | | | | |
| 2-Hexanone (MBK) | <0.050 | 0.050 | mg/kg | | | | | | | |
| Isopropylbenzene | <0.0050 | 0.0050 | mg/kg | | | | | | | |

**Viorel Vasile**
Operations Manager

# LABORATORY ANALYSIS RESULTS

**Client:** Stantec (TO)
**Project No:** 2057123300
**Project Name:** Grayson Power Plant Glendale Phase II

**AA Project No:** A732172
**Date Received:** 04/26/16
**Date Reported:** 05/10/16

| Analyte | Result | Reporting Limit | Units | Spike Level | Source Result | %REC | %REC Limits | RPD | RPD Limit | Notes |
|---|---|---|---|---|---|---|---|---|---|---|
| **VOCs, OXY & TPHG by GC/MS EPA 5035 - Quality Control** | | | | | | | | | | |
| *Batch B6D2841 - EPA 5035* | | | | | | | | | | |
| **Blank (B6D2841-BLK1) Continued** | | | | Prepared & Analyzed: 04/28/16 | | | | | | |
| 4-Isopropyltoluene | <0.0050 | 0.0050 | mg/kg | | | | | | | |
| Methyl-tert-Butyl Ether (MTBE) | <0.0050 | 0.0050 | mg/kg | | | | | | | |
| Methylene Chloride | <0.050 | 0.050 | mg/kg | | | | | | | |
| 4-Methyl-2-pentanone (MIBK) | <0.050 | 0.050 | mg/kg | | | | | | | |
| Naphthalene | <0.010 | 0.010 | mg/kg | | | | | | | |
| n-Propylbenzene | <0.0050 | 0.0050 | mg/kg | | | | | | | |
| Styrene | <0.0050 | 0.0050 | mg/kg | | | | | | | |
| 1,1,1,2-Tetrachloroethane | <0.0050 | 0.0050 | mg/kg | | | | | | | |
| 1,1,2,2-Tetrachloroethane | <0.0050 | 0.0050 | mg/kg | | | | | | | |
| Tetrachloroethylene (PCE) | <0.0050 | 0.0050 | mg/kg | | | | | | | |
| Toluene | <0.0020 | 0.0020 | mg/kg | | | | | | | |
| 1,2,4-Trichlorobenzene | <0.0050 | 0.0050 | mg/kg | | | | | | | |
| 1,2,3-Trichlorobenzene | <0.0050 | 0.0050 | mg/kg | | | | | | | |
| 1,1,2-Trichloroethane | <0.0050 | 0.0050 | mg/kg | | | | | | | |
| 1,1,1-Trichloroethane | <0.0050 | 0.0050 | mg/kg | | | | | | | |
| Trichloroethylene (TCE) | <0.0050 | 0.0050 | mg/kg | | | | | | | |
| Trichlorofluoromethane (R11) | <0.0050 | 0.0050 | mg/kg | | | | | | | |
| 1,2,3-Trichloropropane | <0.0050 | 0.0050 | mg/kg | | | | | | | |
| 1,1,2-Trichloro-1,2,2-trifluoroethane (R113) | <0.0050 | 0.0050 | mg/kg | | | | | | | |
| 1,3,5-Trimethylbenzene | <0.0050 | 0.0050 | mg/kg | | | | | | | |
| 1,2,4-Trimethylbenzene | <0.0050 | 0.0050 | mg/kg | | | | | | | |
| Vinyl chloride | <0.0050 | 0.0050 | mg/kg | | | | | | | |
| o-Xylene | <0.0020 | 0.0020 | mg/kg | | | | | | | |
| m,p-Xylenes | <0.0020 | 0.0020 | mg/kg | | | | | | | |
| *Surrogate: 4-Bromofluorobenzene* | *0.100* | | *mg/kg* | *0.10* | | *100* | *70-140* | | | |
| *Surrogate: Dibromofluoromethane* | *0.107* | | *mg/kg* | *0.10* | | *107* | *70-140* | | | |
| *Surrogate: Toluene-d8* | *0.107* | | *mg/kg* | *0.10* | | *107* | *70-140* | | | |
| **LCS (B6D2841-BS1)** | | | | Prepared & Analyzed: 04/28/16 | | | | | | |
| Acetone | **0.0879** | 0.050 | mg/kg | 0.10 | | 87.9 | 70-130 | | | |
| tert-Amyl Methyl Ether (TAME) | **0.0354** | 0.0050 | mg/kg | 0.040 | | 88.4 | 70-130 | | | |

**Viorel Vasile**
Operations Manager

# LABORATORY ANALYSIS RESULTS

**Client:** Stantec (TO)
**Project No:** 2057123300
**Project Name:** Grayson Power Plant Glendale Phase II

**AA Project No:** A732172
**Date Received:** 04/26/16
**Date Reported:** 05/10/16

| Analyte | Result | Reporting Limit | Units | Spike Level | Source Result | %REC | %REC Limits | RPD | RPD Limit | Notes |
|---|---|---|---|---|---|---|---|---|---|---|
| **VOCs, OXY & TPHG by GC/MS EPA 5035 - Quality Control** | | | | | | | | | | |
| *Batch B6D2841 - EPA 5035* | | | | | | | | | | |
| **LCS (B6D2841-BS1) Continued** | | | | Prepared & Analyzed: 04/28/16 | | | | | | |
| Benzene | **0.0394** | 0.0020 | mg/kg | 0.040 | | 98.5 | 75-125 | | | |
| Bromobenzene | **0.0405** | 0.0050 | mg/kg | 0.040 | | 101 | 70-130 | | | |
| Bromochloromethane | **0.0382** | 0.0050 | mg/kg | 0.040 | | 95.5 | 70-130 | | | |
| Bromodichloromethane | **0.0378** | 0.0050 | mg/kg | 0.040 | | 94.4 | 75-125 | | | |
| Bromoform | **0.0384** | 0.0050 | mg/kg | 0.040 | | 96.0 | 75-125 | | | |
| Bromomethane | **0.0444** | 0.0050 | mg/kg | 0.040 | | 111 | 75-125 | | | |
| 2-Butanone (MEK) | **0.0789** | 0.050 | mg/kg | 0.10 | | 78.9 | 70-130 | | | |
| tert-Butyl alcohol (TBA) | **0.186** | 0.020 | mg/kg | 0.20 | | 92.8 | 70-130 | | | |
| sec-Butylbenzene | **0.0409** | 0.0050 | mg/kg | 0.040 | | 102 | 70-130 | | | |
| tert-Butylbenzene | **0.0414** | 0.0050 | mg/kg | 0.040 | | 104 | 70-130 | | | |
| n-Butylbenzene | **0.0419** | 0.0050 | mg/kg | 0.040 | | 105 | 70-130 | | | |
| Carbon Disulfide | **0.0944** | 0.0050 | mg/kg | 0.10 | | 94.4 | 70-130 | | | |
| Carbon Tetrachloride | **0.0415** | 0.0050 | mg/kg | 0.040 | | 104 | 75-125 | | | |
| Chlorobenzene | **0.0410** | 0.0050 | mg/kg | 0.040 | | 102 | 75-125 | | | |
| Chloroethane | **0.0412** | 0.0050 | mg/kg | 0.040 | | 103 | 75-125 | | | |
| Chloroform | **0.0399** | 0.0050 | mg/kg | 0.040 | | 99.6 | 75-125 | | | |
| Chloromethane | **0.0459** | 0.0050 | mg/kg | 0.040 | | 115 | 65-125 | | | |
| 2-Chlorotoluene | **0.0423** | 0.0050 | mg/kg | 0.040 | | 106 | 70-130 | | | |
| 4-Chlorotoluene | **0.0412** | 0.0050 | mg/kg | 0.040 | | 103 | 70-130 | | | |
| 1,2-Dibromo-3-chloropropane | **0.0370** | 0.010 | mg/kg | 0.040 | | 92.6 | 70-130 | | | |
| Dibromochloromethane | **0.0418** | 0.0050 | mg/kg | 0.040 | | 104 | 75-125 | | | |
| 1,2-Dibromoethane (EDB) | **0.0403** | 0.0050 | mg/kg | 0.040 | | 101 | 70-130 | | | |
| Dibromomethane | **0.0369** | 0.0050 | mg/kg | 0.040 | | 92.4 | 70-130 | | | |
| 1,4-Dichlorobenzene | **0.0399** | 0.0050 | mg/kg | 0.040 | | 99.8 | 75-125 | | | |
| 1,3-Dichlorobenzene | **0.0399** | 0.0050 | mg/kg | 0.040 | | 99.6 | 70-130 | | | |
| 1,2-Dichlorobenzene | **0.0404** | 0.0050 | mg/kg | 0.040 | | 101 | 70-130 | | | |
| Dichlorodifluoromethane (R12) | **0.0404** | 0.0050 | mg/kg | 0.040 | | 101 | 70-130 | | | |
| 1,1-Dichloroethane | **0.0408** | 0.0050 | mg/kg | 0.040 | | 102 | 70-125 | | | |
| 1,2-Dichloroethane (EDC) | **0.0378** | 0.0050 | mg/kg | 0.040 | | 94.6 | 75-125 | | | |
| trans-1,2-Dichloroethylene | **0.0414** | 0.0050 | mg/kg | 0.040 | | 103 | 75-125 | | | |
| cis-1,2-Dichloroethylene | **0.0385** | 0.0050 | mg/kg | 0.040 | | 96.2 | 75-125 | | | |

**Viorel Vasile**
Operations Manager

# LABORATORY ANALYSIS RESULTS

**Client:** Stantec (TO)
**Project No:** 2057123300
**Project Name:** Grayson Power Plant Glendale Phase II

**AA Project No:** A732172
**Date Received:** 04/26/16
**Date Reported:** 05/10/16

| Analyte | Result | Reporting Limit | Units | Spike Level | Source Result | %REC | %REC Limits | RPD | RPD Limit | Notes |
|---|---|---|---|---|---|---|---|---|---|---|
| **VOCs, OXY & TPHG by GC/MS EPA 5035 - Quality Control** | | | | | | | | | | |
| *Batch B6D2841 - EPA 5035* | | | | | | | | | | |
| **LCS (B6D2841-BS1) Continued** | | | | Prepared & Analyzed: 04/28/16 | | | | | | |
| 1,1-Dichloroethylene | **0.0399** | 0.0050 | mg/kg | 0.040 | | 99.8 | 70-130 | | | |
| 2,2-Dichloropropane | **0.0408** | 0.0050 | mg/kg | 0.040 | | 102 | 70-130 | | | |
| 1,3-Dichloropropane | **0.0397** | 0.0050 | mg/kg | 0.040 | | 99.2 | 70-130 | | | |
| 1,2-Dichloropropane | **0.0380** | 0.0050 | mg/kg | 0.040 | | 95.0 | 75-130 | | | |
| trans-1,3-Dichloropropylene | **0.0410** | 0.0050 | mg/kg | 0.040 | | 102 | 70-130 | | | |
| 1,1-Dichloropropylene | **0.0400** | 0.0050 | mg/kg | 0.040 | | 100 | 70-130 | | | |
| cis-1,3-Dichloropropylene | **0.0385** | 0.0050 | mg/kg | 0.040 | | 96.2 | 75-125 | | | |
| Diisopropyl ether (DIPE) | **0.0377** | 0.0050 | mg/kg | 0.040 | | 94.2 | 70-130 | | | |
| Ethylbenzene | **0.0424** | 0.0020 | mg/kg | 0.040 | | 106 | 75-125 | | | |
| Ethyl-tert-Butyl Ether (ETBE) | **0.0375** | 0.0050 | mg/kg | 0.040 | | 93.8 | 70-130 | | | |
| Gasoline Range Organics (GRO) | **1.05** | 0.50 | mg/kg | 1.0 | | 105 | 70-130 | | | |
| Hexachlorobutadiene | **0.0397** | 0.010 | mg/kg | 0.040 | | 99.4 | 70-130 | | | |
| 2-Hexanone (MBK) | **0.0923** | 0.050 | mg/kg | 0.10 | | 92.3 | 70-130 | | | |
| Isopropylbenzene | **0.0425** | 0.0050 | mg/kg | 0.040 | | 106 | 70-130 | | | |
| 4-Isopropyltoluene | **0.0408** | 0.0050 | mg/kg | 0.040 | | 102 | 70-130 | | | |
| Methyl-tert-Butyl Ether (MTBE) | **0.0756** | 0.0050 | mg/kg | 0.080 | | 94.5 | 75-125 | | | |
| Methylene Chloride | **0.0428** | 0.050 | mg/kg | 0.040 | | 107 | 75-130 | | | |
| 4-Methyl-2-pentanone (MIBK) | **0.0899** | 0.050 | mg/kg | 0.10 | | 89.9 | 70-130 | | | |
| Naphthalene | **0.0366** | 0.010 | mg/kg | 0.040 | | 91.4 | 70-130 | | | |
| n-Propylbenzene | **0.0442** | 0.0050 | mg/kg | 0.040 | | 110 | 70-130 | | | |
| Styrene | **0.0406** | 0.0050 | mg/kg | 0.040 | | 101 | 70-130 | | | |
| 1,1,1,2-Tetrachloroethane | **0.0410** | 0.0050 | mg/kg | 0.040 | | 103 | 70-130 | | | |
| 1,1,2,2-Tetrachloroethane | **0.0377** | 0.0050 | mg/kg | 0.040 | | 94.4 | 70-135 | | | |
| Tetrachloroethylene (PCE) | **0.0426** | 0.0050 | mg/kg | 0.040 | | 106 | 75-125 | | | |
| Toluene | **0.0411** | 0.0020 | mg/kg | 0.040 | | 103 | 75-125 | | | |
| 1,2,4-Trichlorobenzene | **0.0389** | 0.0050 | mg/kg | 0.040 | | 97.3 | 70-130 | | | |
| 1,2,3-Trichlorobenzene | **0.0371** | 0.0050 | mg/kg | 0.040 | | 92.8 | 70-130 | | | |
| 1,1,2-Trichloroethane | **0.0406** | 0.0050 | mg/kg | 0.040 | | 101 | 75-125 | | | |
| 1,1,1-Trichloroethane | **0.0406** | 0.0050 | mg/kg | 0.040 | | 102 | 75-125 | | | |
| Trichloroethylene (TCE) | **0.0394** | 0.0050 | mg/kg | 0.040 | | 98.5 | 75-125 | | | |
| Trichlorofluoromethane (R11) | **0.0487** | 0.0050 | mg/kg | 0.040 | | 122 | 70-130 | | | |

**Viorel Vasile**
Operations Manager

# LABORATORY ANALYSIS RESULTS

**Client:** Stantec (TO)
**Project No:** 2057123300
**Project Name:** Grayson Power Plant Glendale Phase II

**AA Project No:** A732172
**Date Received:** 04/26/16
**Date Reported:** 05/10/16

| Analyte | Result | Reporting Limit | Units | Spike Level | Source Result | %REC | %REC Limits | RPD | RPD Limit | Notes |
|---|---|---|---|---|---|---|---|---|---|---|
| **VOCs, OXY & TPHG by GC/MS EPA 5035 - Quality Control** | | | | | | | | | | |
| *Batch B6D2841 - EPA 5035* | | | | | | | | | | |
| **LCS (B6D2841-BS1) Continued** | | | | Prepared & Analyzed: 04/28/16 | | | | | | |
| 1,2,3-Trichloropropane | **0.0370** | 0.0050 | mg/kg | 0.040 | | 92.6 | 70-130 | | | |
| 1,1,2-Trichloro-1,2,2-trifluoroethane (R113) | **0.102** | 0.0050 | mg/kg | 0.080 | | 128 | 70-130 | | | |
| 1,3,5-Trimethylbenzene | **0.0413** | 0.0050 | mg/kg | 0.040 | | 103 | 70-130 | | | |
| 1,2,4-Trimethylbenzene | **0.0405** | 0.0050 | mg/kg | 0.040 | | 101 | 70-130 | | | |
| Vinyl chloride | **0.0439** | 0.0050 | mg/kg | 0.040 | | 110 | 75-125 | | | |
| o-Xylene | **0.0410** | 0.0020 | mg/kg | 0.040 | | 102 | 75-125 | | | |
| m,p-Xylenes | **0.0808** | 0.0020 | mg/kg | 0.080 | | 101 | 70-130 | | | |
| *Surrogate: 4-Bromofluorobenzene* | *0.102* | | *mg/kg* | *0.10* | | *102* | *70-140* | | | |
| *Surrogate: Dibromofluoromethane* | *0.0980* | | *mg/kg* | *0.10* | | *98.0* | *70-140* | | | |
| *Surrogate: Toluene-d8* | *0.103* | | *mg/kg* | *0.10* | | *103* | *70-140* | | | |
| **LCS Dup (B6D2841-BSD1)** | | | | Prepared & Analyzed: 04/28/16 | | | | | | |
| Acetone | **0.0723** | 0.050 | mg/kg | 0.10 | | 72.3 | 70-130 | 19.5 | 30 | |
| tert-Amyl Methyl Ether (TAME) | **0.0347** | 0.0050 | mg/kg | 0.040 | | 86.7 | 70-130 | 1.94 | 30 | |
| Benzene | **0.0415** | 0.0020 | mg/kg | 0.040 | | 104 | 75-125 | 5.19 | 30 | |
| Bromobenzene | **0.0398** | 0.0050 | mg/kg | 0.040 | | 99.5 | 70-130 | 1.79 | 30 | |
| Bromochloromethane | **0.0390** | 0.0050 | mg/kg | 0.040 | | 97.4 | 70-130 | 2.02 | 30 | |
| Bromodichloromethane | **0.0436** | 0.0050 | mg/kg | 0.040 | | 109 | 75-125 | 14.3 | 30 | |
| Bromoform | **0.0355** | 0.0050 | mg/kg | 0.040 | | 88.8 | 75-125 | 7.84 | 30 | |
| Bromomethane | **0.0462** | 0.0050 | mg/kg | 0.040 | | 116 | 75-125 | 4.02 | 30 | |
| 2-Butanone (MEK) | **0.0721** | 0.050 | mg/kg | 0.10 | | 72.1 | 70-130 | 9.03 | 30 | |
| tert-Butyl alcohol (TBA) | **0.191** | 0.020 | mg/kg | 0.20 | | 95.7 | 70-130 | 3.05 | 30 | |
| sec-Butylbenzene | **0.0410** | 0.0050 | mg/kg | 0.040 | | 102 | 70-130 | 0.196 | 30 | |
| tert-Butylbenzene | **0.0410** | 0.0050 | mg/kg | 0.040 | | 103 | 70-130 | 0.970 | 30 | |
| n-Butylbenzene | **0.0423** | 0.0050 | mg/kg | 0.040 | | 106 | 70-130 | 0.951 | 30 | |
| Carbon Disulfide | **0.0956** | 0.0050 | mg/kg | 0.10 | | 95.6 | 70-130 | 1.31 | 30 | |
| Carbon Tetrachloride | **0.0449** | 0.0050 | mg/kg | 0.040 | | 112 | 75-125 | 7.73 | 30 | |
| Chlorobenzene | **0.0407** | 0.0050 | mg/kg | 0.040 | | 102 | 75-125 | 0.735 | 30 | |
| Chloroethane | **0.0468** | 0.0050 | mg/kg | 0.040 | | 117 | 75-125 | 12.9 | 30 | |
| Chloroform | **0.0448** | 0.0050 | mg/kg | 0.040 | | 112 | 75-125 | 11.6 | 30 | |
| Chloromethane | **0.0478** | 0.0050 | mg/kg | 0.040 | | 120 | 65-125 | 4.06 | 30 | |

**Viorel Vasile**
Operations Manager

# LABORATORY ANALYSIS RESULTS

**Client:** Stantec (TO)
**Project No:** 2057123300
**Project Name:** Grayson Power Plant Glendale Phase II

**AA Project No:** A732172
**Date Received:** 04/26/16
**Date Reported:** 05/10/16

## VOCs, OXY & TPHG by GC/MS EPA 5035 - Quality Control

*Batch B6D2841 - EPA 5035*

**LCS Dup (B6D2841-BSD1) Continued** — Prepared & Analyzed: 04/28/16

| Analyte | Result | Reporting Limit | Units | Spike Level | Source Result | %REC | %REC Limits | RPD | RPD Limit | Notes |
|---|---|---|---|---|---|---|---|---|---|---|
| 2-Chlorotoluene | **0.0423** | 0.0050 | mg/kg | 0.040 | | 106 | 70-130 | 0.0473 | 30 | |
| 4-Chlorotoluene | **0.0437** | 0.0050 | mg/kg | 0.040 | | 109 | 70-130 | 5.93 | 30 | |
| 1,2-Dibromo-3-chloropropane | **0.0368** | 0.010 | mg/kg | 0.040 | | 92.0 | 70-130 | 0.650 | 30 | |
| Dibromochloromethane | **0.0393** | 0.0050 | mg/kg | 0.040 | | 98.2 | 75-125 | 6.17 | 30 | |
| 1,2-Dibromoethane (EDB) | **0.0370** | 0.0050 | mg/kg | 0.040 | | 92.4 | 70-130 | 8.65 | 30 | |
| Dibromomethane | **0.0397** | 0.0050 | mg/kg | 0.040 | | 99.4 | 70-130 | 7.30 | 30 | |
| 1,4-Dichlorobenzene | **0.0403** | 0.0050 | mg/kg | 0.040 | | 101 | 75-125 | 0.898 | 30 | |
| 1,3-Dichlorobenzene | **0.0396** | 0.0050 | mg/kg | 0.040 | | 99.1 | 70-130 | 0.553 | 30 | |
| 1,2-Dichlorobenzene | **0.0403** | 0.0050 | mg/kg | 0.040 | | 101 | 70-130 | 0.198 | 30 | |
| Dichlorodifluoromethane (R12) | **0.0470** | 0.0050 | mg/kg | 0.040 | | 117 | 70-130 | 15.1 | 30 | |
| 1,1-Dichloroethane | **0.0448** | 0.0050 | mg/kg | 0.040 | | 112 | 70-125 | 9.25 | 30 | |
| 1,2-Dichloroethane (EDC) | **0.0443** | 0.0050 | mg/kg | 0.040 | | 111 | 75-125 | 15.7 | 30 | |
| trans-1,2-Dichloroethylene | **0.0393** | 0.0050 | mg/kg | 0.040 | | 98.3 | 75-125 | 5.06 | 30 | |
| cis-1,2-Dichloroethylene | **0.0413** | 0.0050 | mg/kg | 0.040 | | 103 | 75-125 | 7.12 | 30 | |
| 1,1-Dichloroethylene | **0.0417** | 0.0050 | mg/kg | 0.040 | | 104 | 70-130 | 4.36 | 30 | |
| 2,2-Dichloropropane | **0.0427** | 0.0050 | mg/kg | 0.040 | | 107 | 70-130 | 4.56 | 30 | |
| 1,3-Dichloropropane | **0.0382** | 0.0050 | mg/kg | 0.040 | | 95.6 | 70-130 | 3.65 | 30 | |
| 1,2-Dichloropropane | **0.0421** | 0.0050 | mg/kg | 0.040 | | 105 | 75-130 | 10.4 | 30 | |
| trans-1,3-Dichloropropylene | **0.0405** | 0.0050 | mg/kg | 0.040 | | 101 | 70-130 | 1.28 | 30 | |
| 1,1-Dichloropropylene | **0.0421** | 0.0050 | mg/kg | 0.040 | | 105 | 70-130 | 5.11 | 30 | |
| cis-1,3-Dichloropropylene | **0.0415** | 0.0050 | mg/kg | 0.040 | | 104 | 75-125 | 7.46 | 30 | |
| Diisopropyl ether (DIPE) | **0.0418** | 0.0050 | mg/kg | 0.040 | | 105 | 70-130 | 10.5 | 30 | |
| Ethylbenzene | **0.0420** | 0.0020 | mg/kg | 0.040 | | 105 | 75-125 | 0.947 | 30 | |
| Ethyl-tert-Butyl Ether (ETBE) | **0.0392** | 0.0050 | mg/kg | 0.040 | | 97.9 | 70-130 | 4.28 | 30 | |
| Gasoline Range Organics (GRO) | **1.01** | 0.50 | mg/kg | 1.0 | | 101 | 70-130 | 4.35 | 30 | |
| Hexachlorobutadiene | **0.0412** | 0.010 | mg/kg | 0.040 | | 103 | 70-130 | 3.51 | 30 | |
| 2-Hexanone (MBK) | **0.0850** | 0.050 | mg/kg | 0.10 | | 85.0 | 70-130 | 8.30 | 30 | |
| Isopropylbenzene | **0.0420** | 0.0050 | mg/kg | 0.040 | | 105 | 70-130 | 1.23 | 30 | |
| 4-Isopropyltoluene | **0.0411** | 0.0050 | mg/kg | 0.040 | | 103 | 70-130 | 0.635 | 30 | |
| Methyl-tert-Butyl Ether (MTBE) | **0.0774** | 0.0050 | mg/kg | 0.080 | | 96.7 | 75-125 | 2.33 | 30 | |
| Methylene Chloride | **0.0414** | 0.050 | mg/kg | 0.040 | | 103 | 75-130 | 3.52 | 30 | |

**Viorel Vasile**
Operations Manager

# LABORATORY ANALYSIS RESULTS

**Client:** Stantec (TO)
**Project No:** 2057123300
**Project Name:** Grayson Power Plant Glendale Phase II

**AA Project No:** A732172
**Date Received:** 04/26/16
**Date Reported:** 05/10/16

| Analyte | Result | Reporting Limit | Units | Spike Level | Source Result | %REC | %REC Limits | RPD | RPD Limit | Notes |
|---|---|---|---|---|---|---|---|---|---|---|
| **VOCs, OXY & TPHG by GC/MS EPA 5035 - Quality Control** | | | | | | | | | | |
| *Batch B6D2841 - EPA 5035* | | | | | | | | | | |
| **LCS Dup (B6D2841-BSD1) Continued** | | | | Prepared & Analyzed: 04/28/16 | | | | | | |
| 4-Methyl-2-pentanone (MIBK) | **0.0837** | 0.050 | mg/kg | 0.10 | | 83.7 | 70-130 | 7.19 | 30 | |
| Naphthalene | **0.0370** | 0.010 | mg/kg | 0.040 | | 92.4 | 70-130 | 1.09 | 30 | |
| n-Propylbenzene | **0.0437** | 0.0050 | mg/kg | 0.040 | | 109 | 70-130 | 1.09 | 30 | |
| Styrene | **0.0395** | 0.0050 | mg/kg | 0.040 | | 98.8 | 70-130 | 2.60 | 30 | |
| 1,1,1,2-Tetrachloroethane | **0.0403** | 0.0050 | mg/kg | 0.040 | | 101 | 70-130 | 1.77 | 30 | |
| 1,1,2,2-Tetrachloroethane | **0.0355** | 0.0050 | mg/kg | 0.040 | | 88.7 | 70-135 | 6.17 | 30 | |
| Tetrachloroethylene (PCE) | **0.0395** | 0.0050 | mg/kg | 0.040 | | 98.8 | 75-125 | 7.45 | 30 | |
| Toluene | **0.0398** | 0.0020 | mg/kg | 0.040 | | 99.5 | 75-125 | 3.17 | 30 | |
| 1,2,4-Trichlorobenzene | **0.0395** | 0.0050 | mg/kg | 0.040 | | 98.6 | 70-130 | 1.38 | 30 | |
| 1,2,3-Trichlorobenzene | **0.0385** | 0.0050 | mg/kg | 0.040 | | 96.2 | 70-130 | 3.54 | 30 | |
| 1,1,2-Trichloroethane | **0.0383** | 0.0050 | mg/kg | 0.040 | | 95.8 | 75-125 | 5.73 | 30 | |
| 1,1,1-Trichloroethane | **0.0457** | 0.0050 | mg/kg | 0.040 | | 114 | 75-125 | 11.8 | 30 | |
| Trichloroethylene (TCE) | **0.0428** | 0.0050 | mg/kg | 0.040 | | 107 | 75-125 | 8.18 | 30 | |
| Trichlorofluoromethane (R11) | **0.0507** | 0.0050 | mg/kg | 0.040 | | 127 | 70-130 | 3.94 | 30 | |
| 1,2,3-Trichloropropane | **0.0351** | 0.0050 | mg/kg | 0.040 | | 87.6 | 70-130 | 5.44 | 30 | |
| 1,1,2-Trichloro-1,2,2-trifluoroethane (R113) | **0.104** | 0.0050 | mg/kg | 0.080 | | 130 | 70-130 | 1.55 | 30 | |
| 1,3,5-Trimethylbenzene | **0.0416** | 0.0050 | mg/kg | 0.040 | | 104 | 70-130 | 0.724 | 30 | |
| 1,2,4-Trimethylbenzene | **0.0403** | 0.0050 | mg/kg | 0.040 | | 101 | 70-130 | 0.544 | 30 | |
| Vinyl chloride | **0.0471** | 0.0050 | mg/kg | 0.040 | | 118 | 75-125 | 6.98 | 30 | |
| o-Xylene | **0.0403** | 0.0020 | mg/kg | 0.040 | | 101 | 75-125 | 1.82 | 30 | |
| m,p-Xylenes | **0.0800** | 0.0020 | mg/kg | 0.080 | | 100 | 70-130 | 1.05 | 30 | |
| *Surrogate: 4-Bromofluorobenzene* | *0.104* | | *mg/kg* | *0.10* | | *104* | *70-140* | | | |
| *Surrogate: Dibromofluoromethane* | *0.107* | | *mg/kg* | *0.10* | | *107* | *70-140* | | | |
| *Surrogate: Toluene-d8* | *0.103* | | *mg/kg* | *0.10* | | *103* | *70-140* | | | |
| **Carbon Chain by GC/FID - Quality Control** | | | | | | | | | | |
| *Batch B6D2848 - EPA 3550B* | | | | | | | | | | |
| **Blank (B6D2848-BLK1)** | | | | Prepared: 04/28/16 Analyzed: 04/29/16 | | | | | | |
| C6-C8 | <1.0 | 1.0 | mg/kg | | | | | | | |
| C8-C10 | <1.0 | 1.0 | mg/kg | | | | | | | |
| C10-C12 | <1.0 | 1.0 | mg/kg | | | | | | | |

**Viorel Vasile**
Operations Manager

# LABORATORY ANALYSIS RESULTS

**Client:** Stantec (TO)
**Project No:** 2057123300
**Project Name:** Grayson Power Plant Glendale Phase II

**AA Project No:** A732172
**Date Received:** 04/26/16
**Date Reported:** 05/10/16

| Analyte | Result | Reporting Limit | Units | Spike Level | Source Result | %REC | %REC Limits | RPD | RPD Limit | Notes |
|---|---|---|---|---|---|---|---|---|---|---|
| **Carbon Chain by GC/FID - Quality Control** | | | | | | | | | | |
| *Batch B6D2848 - EPA 3550B* | | | | | | | | | | |
| **Blank (B6D2848-BLK1) Continued** | | | | Prepared: 04/28/16 | Analyzed: 04/29/16 | | | | | |
| C12-C14 | <1.0 | 1.0 | mg/kg | | | | | | | |
| C14-C16 | <1.0 | 1.0 | mg/kg | | | | | | | |
| C16-C18 | <1.0 | 1.0 | mg/kg | | | | | | | |
| C18-C20 | <1.0 | 1.0 | mg/kg | | | | | | | |
| C20-C22 | <1.0 | 1.0 | mg/kg | | | | | | | |
| C22-C24 | <1.0 | 1.0 | mg/kg | | | | | | | |
| C24-C26 | <1.0 | 1.0 | mg/kg | | | | | | | |
| C26-C28 | <1.0 | 1.0 | mg/kg | | | | | | | |
| C28-C32 | <1.0 | 1.0 | mg/kg | | | | | | | |
| C32-C34 | <1.0 | 1.0 | mg/kg | | | | | | | |
| C34-C36 | <1.0 | 1.0 | mg/kg | | | | | | | |
| C36-C40 | <1.0 | 1.0 | mg/kg | | | | | | | |
| C40-C44 | <1.0 | 1.0 | mg/kg | | | | | | | |
| TPH (C6-C44) | <10 | 10 | mg/kg | | | | | | | |
| *Surrogate: o-Terphenyl* | *11.0* | | *mg/kg* | *10* | | *110* | *50-150* | | | |
| **LCS (B6D2848-BS1)** | | | | Prepared: 04/28/16 | Analyzed: 04/29/16 | | | | | |
| Diesel Range Organics as Diesel | **201** | 10 | mg/kg | 200 | | 100 | 75-125 | | | |
| *Surrogate: o-Terphenyl* | *12.8* | | *mg/kg* | *10* | | *128* | *50-150* | | | |
| **LCS Dup (B6D2848-BSD1)** | | | | Prepared: 04/28/16 | Analyzed: 04/29/16 | | | | | |
| Diesel Range Organics as Diesel | **192** | 10 | mg/kg | 200 | | 95.8 | 75-125 | 4.69 | 40 | |
| *Surrogate: o-Terphenyl* | *12.2* | | *mg/kg* | *10* | | *122* | *50-150* | | | |
| **Matrix Spike (B6D2848-MS1)** | | | **Source: 6D26016-05** | Prepared: 04/28/16 | Analyzed: 04/29/16 | | | | | |
| Diesel Range Organics as Diesel | **200** | 10 | mg/kg | 200 | | 99.8 | 70-130 | | | |
| *Surrogate: o-Terphenyl* | *11.6* | | *mg/kg* | *10* | | *116* | *50-150* | | | |
| **Matrix Spike Dup (B6D2848-MSD1)** | | | **Source: 6D26016-05** | Prepared: 04/28/16 | Analyzed: 04/29/16 | | | | | |
| Diesel Range Organics as Diesel | **187** | 10 | mg/kg | 200 | | 93.6 | 70-130 | 6.42 | 40 | |
| *Surrogate: o-Terphenyl* | *11.7* | | *mg/kg* | *10* | | *117* | *50-150* | | | |
| **Total Metals CAM 17 - Quality Control** | | | | | | | | | | |
| *Batch B6D2719 - EPA 3050B* | | | | | | | | | | |

**Viorel Vasile**
Operations Manager

# LABORATORY ANALYSIS RESULTS

**Client:** Stantec (TO)
**Project No:** 2057123300
**Project Name:** Grayson Power Plant Glendale Phase II

**AA Project No:** A732172
**Date Received:** 04/26/16
**Date Reported:** 05/10/16

| Analyte | Result | Reporting Limit | Units | Spike Level | Source Result | %REC | %REC Limits | RPD | RPD Limit | Notes |
|---|---|---|---|---|---|---|---|---|---|---|
| **Total Metals CAM 17 - Quality Control** | | | | | | | | | | |
| *Batch B6D2719 - EPA 3050B* | | | | | | | | | | |
| **Blank (B6D2719-BLK1)** | | | | Prepared: 04/27/16 Analyzed: 05/03/16 | | | | | | |
| Antimony | <10 | 10 | mg/kg | | | | | | | |
| Arsenic | <0.50 | 0.50 | mg/kg | | | | | | | |
| Barium | <10 | 10 | mg/kg | | | | | | | |
| Beryllium | <1.0 | 1.0 | mg/kg | | | | | | | |
| Cadmium | <1.0 | 1.0 | mg/kg | | | | | | | |
| Chromium | <3.0 | 3.0 | mg/kg | | | | | | | |
| Cobalt | <3.0 | 3.0 | mg/kg | | | | | | | |
| Copper | <3.0 | 3.0 | mg/kg | | | | | | | |
| Lead | <3.0 | 3.0 | mg/kg | | | | | | | |
| Molybdenum | <5.0 | 5.0 | mg/kg | | | | | | | |
| Nickel | <3.0 | 3.0 | mg/kg | | | | | | | |
| Selenium | <0.50 | 0.50 | mg/kg | | | | | | | |
| Silver | <1.0 | 1.0 | mg/kg | | | | | | | |
| Thallium | <5.0 | 5.0 | mg/kg | | | | | | | |
| Vanadium | <10 | 10 | mg/kg | | | | | | | |
| Zinc | <3.0 | 3.0 | mg/kg | | | | | | | |
| **LCS (B6D2719-BS1)** | | | | Prepared: 04/27/16 Analyzed: 05/03/16 | | | | | | |
| Antimony | **51.2** | 10 | mg/kg | 50 | | 102 | 80-120 | | | |
| Arsenic | **52.0** | 0.50 | mg/kg | 50 | | 104 | 80-120 | | | |
| Barium | **51.8** | 10 | mg/kg | 50 | | 104 | 80-120 | | | |
| Beryllium | **53.2** | 1.0 | mg/kg | 50 | | 106 | 80-120 | | | |
| Cadmium | **53.7** | 1.0 | mg/kg | 50 | | 107 | 80-120 | | | |
| Chromium | **51.9** | 3.0 | mg/kg | 50 | | 104 | 80-120 | | | |
| Cobalt | **52.2** | 3.0 | mg/kg | 50 | | 104 | 80-120 | | | |
| Copper | **52.2** | 3.0 | mg/kg | 50 | | 104 | 80-120 | | | |
| Lead | **51.6** | 3.0 | mg/kg | 50 | | 103 | 80-120 | | | |
| Molybdenum | **51.9** | 5.0 | mg/kg | 50 | | 104 | 80-120 | | | |
| Nickel | **52.5** | 3.0 | mg/kg | 50 | | 105 | 80-120 | | | |
| Selenium | **51.7** | 0.50 | mg/kg | 50 | | 103 | 80-120 | | | |
| Silver | **50.6** | 1.0 | mg/kg | 50 | | 101 | 80-120 | | | |
| Thallium | **53.4** | 5.0 | mg/kg | 50 | | 107 | 80-120 | | | |

**Viorel Vasile**
Operations Manager

# LABORATORY ANALYSIS RESULTS

**Client:** Stantec (TO)
**Project No:** 2057123300
**Project Name:** Grayson Power Plant Glendale Phase II

**AA Project No:** A732172
**Date Received:** 04/26/16
**Date Reported:** 05/10/16

| Analyte | Result | Reporting Limit | Units | Spike Level | Source Result | %REC | %REC Limits | RPD | RPD Limit | Notes |
|---|---|---|---|---|---|---|---|---|---|---|
| **Total Metals CAM 17 - Quality Control** | | | | | | | | | | |
| *Batch B6D2719 - EPA 3050B* | | | | | | | | | | |
| **LCS (B6D2719-BS1) Continued** | | | | Prepared: 04/27/16 | | Analyzed: 05/03/16 | | | | |
| Vanadium | **51.2** | 10 | mg/kg | 50 | | 102 | 80-120 | | | |
| Zinc | **57.4** | 3.0 | mg/kg | 50 | | 115 | 80-120 | | | |
| **LCS Dup (B6D2719-BSD1)** | | | | Prepared: 04/27/16 | | Analyzed: 05/03/16 | | | | |
| Antimony | **52.5** | 10 | mg/kg | 50 | | 105 | 80-120 | 2.41 | 20 | |
| Arsenic | **53.7** | 0.50 | mg/kg | 50 | | 107 | 80-120 | 3.12 | 20 | |
| Barium | **52.2** | 10 | mg/kg | 50 | | 104 | 80-120 | 0.770 | 20 | |
| Beryllium | **53.6** | 1.0 | mg/kg | 50 | | 107 | 80-120 | 0.749 | 20 | |
| Cadmium | **53.5** | 1.0 | mg/kg | 50 | | 107 | 80-120 | 0.373 | 20 | |
| Chromium | **52.4** | 3.0 | mg/kg | 50 | | 105 | 80-120 | 0.959 | 20 | |
| Cobalt | **52.8** | 3.0 | mg/kg | 50 | | 106 | 80-120 | 1.14 | 20 | |
| Copper | **52.8** | 3.0 | mg/kg | 50 | | 106 | 80-120 | 0.952 | 20 | |
| Lead | **52.1** | 3.0 | mg/kg | 50 | | 104 | 80-120 | 0.867 | 20 | |
| Molybdenum | **52.2** | 5.0 | mg/kg | 50 | | 104 | 80-120 | 0.481 | 20 | |
| Nickel | **53.0** | 3.0 | mg/kg | 50 | | 106 | 80-120 | 0.853 | 20 | |
| Selenium | **52.1** | 0.50 | mg/kg | 50 | | 104 | 80-120 | 0.771 | 20 | |
| Silver | **51.1** | 1.0 | mg/kg | 50 | | 102 | 80-120 | 1.08 | 20 | |
| Thallium | **55.4** | 5.0 | mg/kg | 50 | | 111 | 80-120 | 3.59 | 20 | |
| Vanadium | **51.7** | 10 | mg/kg | 50 | | 103 | 80-120 | 0.874 | 20 | |
| Zinc | **55.2** | 3.0 | mg/kg | 50 | | 110 | 80-120 | 4.09 | 20 | |
| **Matrix Spike (B6D2719-MS1)** | | **Source: 6D26016-07** | | Prepared: 04/27/16 | | Analyzed: 05/03/16 | | | | |
| Antimony | **22.8** | 10 | mg/kg | 50 | <10 | 45.6 | 75-125 | | | QM-07 |
| Arsenic | **53.2** | 0.50 | mg/kg | 50 | 1.75 | 103 | 75-125 | | | |
| Barium | **133** | 10 | mg/kg | 50 | 80.3 | 105 | 75-125 | | | |
| Beryllium | **51.4** | 1.0 | mg/kg | 50 | <1.0 | 103 | 75-125 | | | |
| Cadmium | **50.5** | 1.0 | mg/kg | 50 | <1.0 | 101 | 75-125 | | | |
| Chromium | **59.7** | 3.0 | mg/kg | 50 | 9.38 | 101 | 75-125 | | | |
| Cobalt | **57.2** | 3.0 | mg/kg | 50 | 7.18 | 100 | 75-125 | | | |
| Copper | **63.2** | 3.0 | mg/kg | 50 | 10.6 | 105 | 75-125 | | | |
| Lead | **53.6** | 3.0 | mg/kg | 50 | <3.0 | 107 | 75-125 | | | |
| Molybdenum | **50.2** | 5.0 | mg/kg | 50 | <5.0 | 100 | 75-125 | | | |
| Nickel | **54.0** | 3.0 | mg/kg | 50 | 6.29 | 95.5 | 75-125 | | | |

**Viorel Vasile**
Operations Manager

# LABORATORY ANALYSIS RESULTS

**Client:** Stantec (TO)
**Project No:** 2057123300
**Project Name:** Grayson Power Plant Glendale Phase II

**AA Project No:** A732172
**Date Received:** 04/26/16
**Date Reported:** 05/10/16

| Analyte | Result | Reporting Limit | Units | Spike Level | Source Result | %REC | %REC Limits | RPD | RPD Limit | Notes |
|---|---|---|---|---|---|---|---|---|---|---|
| **Total Metals CAM 17 - Quality Control** | | | | | | | | | | |
| *Batch B6D2719 - EPA 3050B* | | | | | | | | | | |
| **Matrix Spike (B6D2719-MS1) Continued Source: 6D26016-07** Prepared: 04/27/16 Analyzed: 05/03/16 | | | | | | | | | | |
| Selenium | **51.8** | 0.50 | mg/kg | 50 | <0.50 | 104 | 75-125 | | | |
| Silver | **49.7** | 1.0 | mg/kg | 50 | <1.0 | 99.5 | 75-125 | | | |
| Thallium | **42.4** | 5.0 | mg/kg | 50 | <5.0 | 84.8 | 60-140 | | | |
| Vanadium | **87.3** | 10 | mg/kg | 50 | 37.3 | 100 | 75-125 | | | |
| Zinc | **94.5** | 3.0 | mg/kg | 50 | 61.8 | 65.3 | 75-125 | | | QM-07 |
| **Matrix Spike Dup (B6D2719-MSD1) Source: 6D26016-07** Prepared: 04/27/16 Analyzed: 05/03/16 | | | | | | | | | | |
| Antimony | **23.7** | 10 | mg/kg | 50 | <10 | 47.3 | 75-125 | 3.66 | 40 | QM-07 |
| Arsenic | **55.4** | 0.50 | mg/kg | 50 | 1.75 | 107 | 75-125 | 3.96 | 40 | |
| Barium | **135** | 10 | mg/kg | 50 | 80.3 | 109 | 75-125 | 1.61 | 40 | |
| Beryllium | **52.9** | 1.0 | mg/kg | 50 | <1.0 | 106 | 75-125 | 2.97 | 40 | |
| Cadmium | **52.2** | 1.0 | mg/kg | 50 | <1.0 | 104 | 75-125 | 3.21 | 40 | |
| Chromium | **61.6** | 3.0 | mg/kg | 50 | 9.38 | 104 | 75-125 | 3.05 | 40 | |
| Cobalt | **59.8** | 3.0 | mg/kg | 50 | 7.18 | 105 | 75-125 | 4.27 | 40 | |
| Copper | **65.6** | 3.0 | mg/kg | 50 | 10.6 | 110 | 75-125 | 3.73 | 40 | |
| Lead | **54.0** | 3.0 | mg/kg | 50 | <3.0 | 108 | 75-125 | 0.837 | 40 | |
| Molybdenum | **51.6** | 5.0 | mg/kg | 50 | <5.0 | 103 | 75-125 | 2.85 | 40 | |
| Nickel | **57.2** | 3.0 | mg/kg | 50 | 6.29 | 102 | 75-125 | 5.75 | 40 | |
| Selenium | **52.7** | 0.50 | mg/kg | 50 | <0.50 | 105 | 75-125 | 1.63 | 40 | |
| Silver | **50.6** | 1.0 | mg/kg | 50 | <1.0 | 101 | 75-125 | 1.82 | 40 | |
| Thallium | **46.8** | 5.0 | mg/kg | 50 | <5.0 | 93.6 | 60-140 | 9.85 | 40 | |
| Vanadium | **91.1** | 10 | mg/kg | 50 | 37.3 | 108 | 75-125 | 4.26 | 40 | |
| Zinc | **98.8** | 3.0 | mg/kg | 50 | 61.8 | 73.8 | 75-125 | 4.40 | 40 | QM-07 |
| **Total Metals CAM 17 - Quality Control** | | | | | | | | | | |
| *Batch B6D2720 - EPA 7471A Prep* | | | | | | | | | | |
| **Blank (B6D2720-BLK1)** Prepared: 04/27/16 Analyzed: 04/28/16 | | | | | | | | | | |
| Mercury | <0.020 | 0.020 | mg/kg | | | | | | | |
| **LCS (B6D2720-BS1)** Prepared: 04/27/16 Analyzed: 04/28/16 | | | | | | | | | | |
| Mercury | **0.527** | 0.020 | mg/kg | 0.50 | | 105 | 80-120 | | | |
| **LCS Dup (B6D2720-BSD1)** Prepared: 04/27/16 Analyzed: 04/28/16 | | | | | | | | | | |
| Mercury | **0.506** | 0.020 | mg/kg | 0.50 | | 101 | 80-120 | 4.16 | 25 | |

**Viorel Vasile**
Operations Manager

# LABORATORY ANALYSIS RESULTS

**Client:** Stantec (TO)
**Project No:** 2057123300
**Project Name:** Grayson Power Plant Glendale Phase II

**AA Project No:** A732172
**Date Received:** 04/26/16
**Date Reported:** 05/10/16

| Analyte | Result | Reporting Limit | Units | Spike Level | Source Result | %REC | %REC Limits | RPD | RPD Limit | Notes |
|---|---|---|---|---|---|---|---|---|---|---|
| **Total Metals CAM 17 - Quality Control** | | | | | | | | | | |
| *Batch B6D2720 - EPA 7471A Prep* | | | | | | | | | | |
| **Matrix Spike (B6D2720-MS1)** | | | **Source: 6D26016-07** | Prepared: 04/27/16 | Analyzed: 04/28/16 | | | | | |
| Mercury | **0.534** | 0.020 | mg/kg | 0.50 | 0.0415 | 98.4 | 75-125 | | | |
| **Matrix Spike Dup (B6D2720-MSD1)** | | | **Source: 6D26016-07** | Prepared: 04/27/16 | Analyzed: 04/28/16 | | | | | |
| Mercury | **0.465** | 0.020 | mg/kg | 0.50 | 0.0415 | 84.7 | 75-125 | 13.7 | 25 | |

**Viorel Vasile**
Operations Manager

# LABORATORY ANALYSIS RESULTS

| | | | |
|---|---|---|---|
| **Client:** | Stantec (TO) | **AA Project No:** | A732172 |
| **Project No:** | 2057123300 | **Date Received:** | 04/26/16 |
| **Project Name:** | Grayson Power Plant Glendale Phase II | **Date Reported:** | 05/10/16 |

**Special Notes**

**[1] = QM-07** : The spike recovery was outside acceptance limits for the MS and/or MSD. The batch was accepted based on acceptable LCS recovery.

Gasoline Range Organics (GRO) concentration represents the C4-C12 carbon range.

**Viorel Vasile**
Operations Manager

124981

Stantec

# CHAIN OF CUSTODY FORM

25864-F Business Center Dr., Redlands, CA 92374 (909) 335-6116, Fax (909) 335-6120

A732172/6D16016

Page 1 of

Client Name/Address:
Stantec
25864-F Business Center Drive
Redlands, CA 92374

Project/PO Number:
205128300

Laboratory: American Analytics

Project Manager: Tom. Szocinski@stantec.com
Email Address: Anuja.Jawant@Stantec.com
Phone Number: 909-335-6116
Fax Number: 909-335-6120
Sampler: J. Sargent Joshua.Sargent@Stantec.com

Analysis Required

| Sample Description | Sample Matrix | Container Type | # of Cont. | Sampling Date | Sampling Time | Preservatives | CAM 17 Metals 6010B | TPH 8015 | Voc+oxygenates 8260 | Chlorides 7193 | | | | | | Special Instructions |
|---|---|---|---|---|---|---|---|---|---|---|---|---|---|---|---|---|
| SB-14-1 | Soil | Jar | 1 | 4.26.16 | 0830 | ICE | X | | | | | | | | | 6D16016-01 |
| SB-14-5 | | Terra Core | 4 | | 1108 | | | X | X | | | | | | | -02 |
| SB-14-15 | | " | 4 | | 1130 | | | X | X | X | | | | | | -03 |
| SB-15-1 | | Jar | 1 | | 0657 | | X | | | | | | | | | -04 |
| SB-15-5 | | Terra Core | 4 | | 1033 | | | X | X | | | | | | | -05 |
| SB-15-11 | | " | 4 | | 1043 | | | X | X | X | | | | | | -06 |
| SB-16-1 | | Jar | 1 | | 0757 | | X | | | | | | | | | -07 |
| SB-16-5 | | Terra Core | 4 | | 0811 | | | X | X | | | | | | | -08 |
| SB-16-11 | | " | 4 | | 1001 | | | X | X | X | | | | | | -09 |
| SB-R-1 | | Jar | 1 | | 1309 | | X | | | | | | | | | -10 |

RECEIVED Date 4/26/16 Time 1530 Date Sign

| Relinquished By: | Date/Time: | Received By: | Date/Time: |
|---|---|---|---|
| | 4.26.16 1358 | Gustavo Lopez | 4/26/16 1358 |
| Relinquished By: | Date/Time: | Received By: | Date/Time: 4/26/16 1456 |
| Relinquished By: | Date/Time: | Received in Lab By: | Date/Time: |

Turn Around Time: Same day 72 hours; 24 hour 5 days; 48 hour Normal

Sample Integrity: (Check)
Intact: X on ice X

**Note:** By relinquishing samples, client agrees to pay for the services requested on this chain of custody form and any additional analyses performed on this project. Payment for services is due within 30 days from the date of invoice. Sample(s) will be disposed of after 30 days.

9765 Eton Avenue
Chatsworth
California 91311
Tel: (818) 998-5547
Fax: (818) 998-7258

May 10, 2016

Anuya Sawant

Stantec (TO)

290 Conejo Ridge Ave. Suite #200

Thousand Oaks, CA 91361

**Re : Grayson Power Plant Glendale Phase II / 2057123300**

**A732174 / 6D27022**

Enclosed is an analytical report for the above-referenced project. The samples included in this report were received on 04/27/16 15:15 and analyzed in accordance with the attached chain-of-custody.

Unless otherwise noted, all analytical testing was accomplished in accordance with the guidelines established in our Quality Assurance Program Manual, applicable standard operating procedures, and other related documentation. The results in this analytical report are limited to the samples tested and any reproduction thereof must be made in its entirety.

If you have any questions regarding this report or require additional information please call me at American Analytics.

Sincerely,

Viorel Vasile

Operations Manager

# LABORATORY ANALYSIS RESULTS

**Client:** Stantec (TO)
**Project No:** 2057123300
**Project Name:** Grayson Power Plant Glendale Phase II

**AA Project No:** A732174
**Date Received:** 04/27/16
**Date Reported:** 05/10/16

| Sample ID | Laboratory ID | Matrix | TAT | Date Sampled | Date Received |
|---|---|---|---|---|---|
| **7199 Hexavalent Chromium by IC - Low Level** | | | | | |
| SB-12-40 | 6D27022-03 | Soil | 7 | 04/27/16 07:26 | 04/27/16 15:15 |
| SB-12-GW | 6D27022-04 | Water | 7 | 04/27/16 08:16 | 04/27/16 15:15 |
| SB-8-25 | 6D27022-07 | Soil | 7 | 04/27/16 09:25 | 04/27/16 15:15 |
| SB-6-10 | 6D27022-10 | Soil | 7 | 04/27/16 12:40 | 04/27/16 15:15 |
| SB-7-15 | 6D27022-15 | Soil | 7 | 04/27/16 13:37 | 04/27/16 15:15 |
| **8260B/5035 +OXY+TPHG** | | | | | |
| SB-12-20 | 6D27022-01 | Soil | 7 | 04/27/16 07:10 | 04/27/16 15:15 |
| SB-12-40 | 6D27022-03 | Soil | 7 | 04/27/16 07:26 | 04/27/16 15:15 |
| SB-8-20 | 6D27022-06 | Soil | 7 | 04/27/16 09:24 | 04/27/16 15:15 |
| SB-8-25 | 6D27022-07 | Soil | 7 | 04/27/16 09:25 | 04/27/16 15:15 |
| SB-6-10 | 6D27022-10 | Soil | 7 | 04/27/16 12:40 | 04/27/16 15:15 |
| SB-6-35 | 6D27022-12 | Soil | 7 | 04/27/16 12:51 | 04/27/16 15:15 |
| SB-7-10 | 6D27022-14 | Soil | 7 | 04/27/16 13:35 | 04/27/16 15:15 |
| SB-7-15 | 6D27022-15 | Soil | 7 | 04/27/16 13:37 | 04/27/16 15:15 |
| **8260B+OXY+TPHG** | | | | | |
| SB-12-GW | 6D27022-04 | Water | 7 | 04/27/16 08:16 | 04/27/16 15:15 |
| Trip Blank | 6D27022-17 | Water | 7 | 04/27/16 00:00 | 04/27/16 15:15 |

**Viorel Vasile**
Operations Manager

# LABORATORY ANALYSIS RESULTS

**Client:** Stantec (TO)
**Project No:** 2057123300
**Project Name:** Grayson Power Plant Glendale Phase II

**AA Project No:** A732174
**Date Received:** 04/27/16
**Date Reported:** 05/10/16

| Sample ID | Laboratory ID | Matrix | TAT | Date Sampled | Date Received |
|---|---|---|---|---|---|
| **CAM Metals Less Hg 6000/7000** | | | | | |
| SB-12-GW | 6D27022-04 | Water | 7 | 04/27/16 08:16 | 04/27/16 15:15 |
| SB-8-1 | 6D27022-05 | Soil | 7 | 04/27/16 08:37 | 04/27/16 15:15 |
| SB-6-1 | 6D27022-09 | Soil | 7 | 04/27/16 11:04 | 04/27/16 15:15 |
| SB-7-1 | 6D27022-13 | Soil | 7 | 04/27/16 11:34 | 04/27/16 15:15 |
| **Carbon Chain Characterization 8015M** | | | | | |
| SB-12-20 | 6D27022-01 | Soil | 7 | 04/27/16 07:10 | 04/27/16 15:15 |
| SB-12-40 | 6D27022-03 | Soil | 7 | 04/27/16 07:26 | 04/27/16 15:15 |
| SB-12-GW | 6D27022-04 | Water | 7 | 04/27/16 08:16 | 04/27/16 15:15 |
| SB-8-20 | 6D27022-06 | Soil | 7 | 04/27/16 09:24 | 04/27/16 15:15 |
| SB-8-25 | 6D27022-07 | Soil | 7 | 04/27/16 09:25 | 04/27/16 15:15 |
| SB-6-10 | 6D27022-10 | Soil | 7 | 04/27/16 12:40 | 04/27/16 15:15 |
| SB-6-35 | 6D27022-12 | Soil | 7 | 04/27/16 12:51 | 04/27/16 15:15 |
| SB-7-10 | 6D27022-14 | Soil | 7 | 04/27/16 13:35 | 04/27/16 15:15 |
| SB-7-15 | 6D27022-15 | Soil | 7 | 04/27/16 13:37 | 04/27/16 15:15 |
| **Mercury Total EPA 7470A/7471A** | | | | | |
| SB-12-GW | 6D27022-04 | Water | 7 | 04/27/16 08:16 | 04/27/16 15:15 |
| SB-8-1 | 6D27022-05 | Soil | 7 | 04/27/16 08:37 | 04/27/16 15:15 |
| SB-6-1 | 6D27022-09 | Soil | 7 | 04/27/16 11:04 | 04/27/16 15:15 |

**Viorel Vasile**
Operations Manager

# LABORATORY ANALYSIS RESULTS

**Client:** Stantec (TO)
**Project No:** 2057123300
**Project Name:** Grayson Power Plant Glendale Phase II

**AA Project No:** A732174
**Date Received:** 04/27/16
**Date Reported:** 05/10/16

| Sample ID | Laboratory ID | Matrix | TAT | Date Sampled | Date Received |
|---|---|---|---|---|---|
| SB-7-1 | 6D27022-13 | Soil | 7 | 04/27/16 11:34 | 04/27/16 15:15 |

**Viorel Vasile**
Operations Manager

# LABORATORY ANALYSIS RESULTS

**Client:** Stantec (TO)
**Project No:** 2057123300
**Project Name:** Grayson Power Plant Glendale Phase II
**Method:** Carbon Chain by GC/FID

**AA Project No:** A732174
**Date Received:** 04/27/16
**Date Reported:** 05/10/16
**Units:** mg/kg

| | | | | | |
|---|---|---|---|---|---|
| **Date Sampled:** | 04/27/16 | 04/27/16 | 04/27/16 | 04/27/16 | |
| **Date Prepared:** | 04/28/16 | 04/28/16 | 04/28/16 | 04/28/16 | |
| **Date Analyzed:** | 04/29/16 | 04/29/16 | 04/29/16 | 04/29/16 | |
| **AA ID No:** | 6D27022-01 | 6D27022-03 | 6D27022-06 | 6D27022-07 | |
| **Client ID No:** | SB-12-20 | SB-12-40 | SB-8-20 | SB-8-25 | |
| **Matrix:** | Soil | Soil | Soil | Soil | |
| **Dilution Factor:** | 1 | 1 | 1 | 100 | MRL |
| **Carbon Chain Characterization 8015M (EPA 8015M)** | | | | | |
| C6-C8 | <1.0 | <1.0 | <1.0 | <100 | 1.0 |
| C8-C10 | <1.0 | <1.0 | <1.0 | <100 | 1.0 |
| C10-C12 | <1.0 | <1.0 | <1.0 | **220** | 1.0 |
| C12-C14 | <1.0 | <1.0 | <1.0 | **680** | 1.0 |
| C14-C16 | <1.0 | <1.0 | **1.9** | **1200** | 1.0 |
| C16-C18 | <1.0 | <1.0 | **1.7** | **1200** | 1.0 |
| C18-C20 | <1.0 | <1.0 | <1.0 | **1300** | 1.0 |
| C20-C22 | <1.0 | <1.0 | <1.0 | **2200** | 1.0 |
| C22-C24 | <1.0 | <1.0 | <1.0 | **2500** | 1.0 |
| C24-C26 | <1.0 | <1.0 | <1.0 | **2600** | 1.0 |
| C26-C28 | **1.1** | **3.3** | <1.0 | **3100** | 1.0 |
| C28-C32 | <1.0 | **1.8** | **1.4** | **5400** | 1.0 |
| C32-C34 | <1.0 | <1.0 | <1.0 | **2100** | 1.0 |
| C34-C36 | <1.0 | <1.0 | <1.0 | **1500** | 1.0 |
| C36-C40 | <1.0 | <1.0 | <1.0 | **1800** | 1.0 |
| C40-C44 | <1.0 | <1.0 | <1.0 | **1000** | 1.0 |
| TPH (C6-C44) | <10 | <10 | <10 | **27000** | 10 |
| **Surrogates** | | | | | **%REC Limits** |
| o-Terphenyl | 104% | 109% | 111% | 116% | 50-150 |

**Viorel Vasile**
Operations Manager

# LABORATORY ANALYSIS RESULTS

**Client:** Stantec (TO)
**Project No:** 2057123300
**Project Name:** Grayson Power Plant Glendale Phase II
**Method:** Carbon Chain by GC/FID

**AA Project No:** A732174
**Date Received:** 04/27/16
**Date Reported:** 05/10/16
**Units:** mg/kg

| | | | | | |
|---|---|---|---|---|---|
| **Date Sampled:** | 04/27/16 | 04/27/16 | 04/27/16 | 04/27/16 | |
| **Date Prepared:** | 04/28/16 | 04/28/16 | 04/28/16 | 04/28/16 | |
| **Date Analyzed:** | 04/29/16 | 04/29/16 | 04/29/16 | 04/29/16 | |
| **AA ID No:** | 6D27022-10 | 6D27022-12 | 6D27022-14 | 6D27022-15 | |
| **Client ID No:** | SB-6-10 | SB-6-35 | SB-7-10 | SB-7-15 | |
| **Matrix:** | Soil | Soil | Soil | Soil | |
| **Dilution Factor:** | 1 | 1 | 1 | 1 | MRL |
| **Carbon Chain Characterization 8015M (EPA 8015M)** | | | | | |
| C6-C8 | <1.0 | <1.0 | <1.0 | <1.0 | 1.0 |
| C8-C10 | <1.0 | <1.0 | <1.0 | <1.0 | 1.0 |
| C10-C12 | <1.0 | **1.2** | **1.1** | <1.0 | 1.0 |
| C12-C14 | <1.0 | <1.0 | <1.0 | <1.0 | 1.0 |
| C14-C16 | <1.0 | **2.9** | **4.4** | **2.1** | 1.0 |
| C16-C18 | <1.0 | <1.0 | <1.0 | **3.8** | 1.0 |
| C18-C20 | <1.0 | <1.0 | <1.0 | **6.2** | 1.0 |
| C20-C22 | **1.2** | <1.0 | <1.0 | **13** | 1.0 |
| C22-C24 | **1.3** | <1.0 | <1.0 | **14** | 1.0 |
| C24-C26 | **2.5** | <1.0 | **1.0** | **18** | 1.0 |
| C26-C28 | **4.6** | **1.5** | <1.0 | **20** | 1.0 |
| C28-C32 | **13** | <1.0 | **1.0** | **39** | 1.0 |
| C32-C34 | **5.4** | <1.0 | <1.0 | **16** | 1.0 |
| C34-C36 | **5.8** | <1.0 | <1.0 | **14** | 1.0 |
| C36-C40 | **11** | <1.0 | <1.0 | **21** | 1.0 |
| C40-C44 | **7.2** | <1.0 | <1.0 | **12** | 1.0 |
| TPH (C6-C44) | **53** | <10 | <10 | **180** | 10 |
| **Surrogates** | | | | | **%REC Limits** |
| o-Terphenyl | 108% | 111% | 111% | 121% | 50-150 |

**Viorel Vasile**
Operations Manager

# LABORATORY ANALYSIS RESULTS

| | | | |
|---|---|---|---|
| **Client:** | Stantec (TO) | **AA Project No:** | A732174 |
| **Project No:** | 2057123300 | **Date Received:** | 04/27/16 |
| **Project Name:** | Grayson Power Plant Glendale Phase II | **Date Reported:** | 05/10/16 |
| **Method:** | Carbon Chain by GC/FID | **Units:** | mg/L |

| | | |
|---|---|---|
| **Date Sampled:** | 04/27/16 | |
| **Date Prepared:** | 04/28/16 | |
| **Date Analyzed:** | 04/28/16 | |
| **AA ID No:** | 6D27022-04 | |
| **Client ID No:** | SB-12-GW | |
| **Matrix:** | Water | |
| **Dilution Factor:** | 1 | MRL |

**Carbon Chain Characterization 8015M (EPA 8015M)**

| | | |
|---|---|---|
| C6-C8 | **0.017** | 0.010 |
| C8-C10 | <0.010 | 0.010 |
| C10-C12 | <0.010 | 0.010 |
| C12-C14 | **0.025** | 0.010 |
| C14-C16 | **0.017** | 0.010 |
| C16-C18 | **0.020** | 0.010 |
| C18-C20 | **0.025** | 0.010 |
| C20-C22 | **0.030** | 0.010 |
| C22-C24 | **0.027** | 0.010 |
| C24-C26 | **0.017** | 0.010 |
| C26-C28 | **0.026** | 0.010 |
| C28-C32 | **0.073** | 0.010 |
| C32-C34 | **0.030** | 0.010 |
| C34-C36 | **0.031** | 0.010 |
| C36-C40 | **0.055** | 0.010 |
| C40-C44 | **0.015** | 0.010 |
| TPH (C6-C44) | **0.41** | 0.10 |

| **Surrogates** | | **%REC Limits** |
|---|---|---|
| o-Terphenyl | 83% | 50-150 |

**Viorel Vasile**
Operations Manager

# LABORATORY ANALYSIS RESULTS

**Client:** Stantec (TO)
**Project No:** 2057123300
**Project Name:** Grayson Power Plant Glendale Phase II
**Method:** Cations by Ion Chromatography

**AA Project No:** A732174
**Date Received:** 04/27/16
**Date Reported:** 05/10/16

| AA I.D. No. | Client I.D. No. | Sampled | Prepared | Analyzed | Dilution | Result | Units | MRL |
|---|---|---|---|---|---|---|---|---|
| **7199 Hexavalent Chromium by IC - Low Level (EPA 7199)** | | | | | | | | |
| 6D27022-03 | SB-12-40 | 04/27/16 | 04/29/16 | 04/29/16 | 1 | <0.040 | mg/kg | 0.04 |
| 6D27022-07 | SB-8-25 | 04/27/16 | 04/29/16 | 04/29/16 | 1 | <0.040 | mg/kg | 0.04 |
| 6D27022-10 | SB-6-10 | 04/27/16 | 04/29/16 | 04/29/16 | 1 | <0.040 | mg/kg | 0.04 |
| 6D27022-15 | SB-7-15 | 04/27/16 | 04/29/16 | 04/29/16 | 1 | <0.040 | mg/kg | 0.04 |

**Viorel Vasile**
Operations Manager

# LABORATORY ANALYSIS RESULTS

**Client:** Stantec (TO)
**Project No:** 2057123300
**Project Name:** Grayson Power Plant Glendale Phase II
**Method:** Cations by Ion Chromatography

**AA Project No:** A732174
**Date Received:** 04/27/16
**Date Reported:** 05/10/16

| AA I.D. No. | Client I.D. No. | Sampled | Prepared | Analyzed | Dilution | Result | Units | MRL |
|---|---|---|---|---|---|---|---|---|
| **7199 Hexavalent Chromium by IC - Low Level (EPA 7199)** | | | | | | | | |
| 6D27022-04 | SB-12-GW | 04/27/16 | 04/27/16 | 04/27/16 | 1 | <0.30 | ug/L | 0.3 |

**Viorel Vasile**
Operations Manager

# LABORATORY ANALYSIS RESULTS

**Client:** Stantec (TO)
**Project No:** 2057123300
**Project Name:** Grayson Power Plant Glendale Phase II
**Method:** Total Metals CAM 17

**AA Project No:** A732174
**Date Received:** 04/27/16
**Date Reported:** 05/10/16
**Units:** mg/kg

| | | | | |
|---|---|---|---|---|
| **Date Sampled:** | 04/27/16 | 04/27/16 | 04/27/16 | |
| **Date Prepared:** | 05/02/16 | 05/02/16 | 05/02/16 | |
| **Date Analyzed:** | 05/02/16 | 05/02/16 | 05/02/16 | |
| **AA ID No:** | 6D27022-05 | 6D27022-09 | 6D27022-13 | |
| **Client ID No:** | SB-8-1 | SB-6-1 | SB-7-1 | |
| **Matrix:** | Soil | Soil | Soil | |
| **Dilution Factor:** | 1 | 1 | 1 | MRL |
| **Mercury Total EPA 7470A/7471A (EPA 7471A)** | | | | |
| Mercury | **0.083** | **0.31** | **0.080** | 0.020 |

**Viorel Vasile**
Operations Manager

# LABORATORY ANALYSIS RESULTS

| | | | |
|---|---|---|---|
| **Client:** | Stantec (TO) | **AA Project No:** | A732174 |
| **Project No:** | 2057123300 | **Date Received:** | 04/27/16 |
| **Project Name:** | Grayson Power Plant Glendale Phase II | **Date Reported:** | 05/10/16 |
| **Method:** | Total Metals CAM 17 | **Units:** | mg/L |

| | | |
|---|---|---|
| **Date Sampled:** | 04/27/16 | |
| **Date Prepared:** | 05/03/16 | |
| **Date Analyzed:** | 05/03/16 | |
| **AA ID No:** | 6D27022-04 | |
| **Client ID No:** | SB-12-GW | |
| **Matrix:** | Water | |
| **Dilution Factor:** | 1 | MRL |

**Mercury Total EPA 7470A/7471A (EPA 7470A)**

| | | |
|---|---|---|
| Mercury | <0.00050 | 0.00050 |

**Viorel Vasile**
Operations Manager

# LABORATORY ANALYSIS RESULTS

**Client:** Stantec (TO)
**Project No:** 2057123300
**Project Name:** Grayson Power Plant Glendale Phase II
**Method:** Total Metals CAM 17

**AA Project No:** A732174
**Date Received:** 04/27/16
**Date Reported:** 05/10/16
**Units:** mg/kg

| | | | | |
|---|---|---|---|---|
| **Date Sampled:** | 04/27/16 | 04/27/16 | 04/27/16 | |
| **Date Prepared:** | 05/02/16 | 05/02/16 | 05/02/16 | |
| **Date Analyzed:** | 05/03/16 | 05/03/16 | 05/03/16 | |
| **AA ID No:** | 6D27022-05 | 6D27022-09 | 6D27022-13 | |
| **Client ID No:** | SB-8-1 | SB-6-1 | SB-7-1 | |
| **Matrix:** | Soil | Soil | Soil | |
| **Dilution Factor:** | 1 | 1 | 1 | MRL |
| **CAM Metals Less Hg 6000/7000 (EPA 6010B/7000)** | | | | |
| Antimony | <10 | <10 | <10 | 10 |
| Arsenic | **6.3** | **4.4** | **2.5** | 0.50 |
| Barium | **130** | **110** | **140** | 10 |
| Beryllium | <1.0 | <1.0 | <1.0 | 1.0 |
| Cadmium | <1.0 | **3.8** | <1.0 | 1.0 |
| Chromium | **22** | **15** | **30** | 3.0 |
| Cobalt | **9.8** | **8.2** | **11** | 3.0 |
| Copper | **27** | **41** | **29** | 3.0 |
| Lead | **27** | **220** | **49** | 3.0 |
| Molybdenum | <5.0 | <5.0 | <5.0 | 5.0 |
| Nickel | **26** | **9.2** | **13** | 3.0 |
| Selenium | <0.50 | <0.50 | <0.50 | 0.50 |
| Silver | <1.0 | <1.0 | <1.0 | 1.0 |
| Thallium | <5.0 | <5.0 | <5.0 | 5.0 |
| Vanadium | **51** | **43** | **53** | 10 |
| Zinc | **120** | **290** | **170** | 3.0 |

**Viorel Vasile**
Operations Manager

# LABORATORY ANALYSIS RESULTS

**Client:** Stantec (TO)
**Project No:** 2057123300
**Project Name:** Grayson Power Plant Glendale Phase II
**Method:** VOCs, OXY & TPH Gasoline by GC/MS

**AA Project No:** A732174
**Date Received:** 04/27/16
**Date Reported:** 05/10/16
**Units:** ug/L

| | | | |
|---|---|---|---|
| **Date Sampled:** | 04/27/16 | 04/27/16 | |
| **Date Prepared:** | 04/29/16 | 04/29/16 | |
| **Date Analyzed:** | 04/30/16 | 04/30/16 | |
| **AA ID No:** | 6D27022-04 | 6D27022-17 | |
| **Client ID No:** | SB-12-GW | Trip Blank | |
| **Matrix:** | Water | Water | |
| **Dilution Factor:** | 1 | 1 | MRL |
| **8260B+OXY+TPHG (EPA 8260B)** | | | |
| Acetone | <10 | <10 | 10 |
| tert-Amyl Methyl Ether (TAME) | <2.0 | <2.0 | 2.0 |
| Benzene | <0.50 | <0.50 | 0.50 |
| Bromobenzene | <0.50 | <0.50 | 0.50 |
| Bromochloromethane | <0.50 | <0.50 | 0.50 |
| Bromodichloromethane | <0.50 | <0.50 | 0.50 |
| Bromoform | <0.50 | <0.50 | 0.50 |
| Bromomethane | <0.50 | <0.50 | 0.50 |
| 2-Butanone (MEK) | <10 | <10 | 10 |
| tert-Butyl alcohol (TBA) | <10 | <10 | 10 |
| sec-Butylbenzene | <0.50 | <0.50 | 0.50 |
| tert-Butylbenzene | <0.50 | <0.50 | 0.50 |
| n-Butylbenzene | <0.50 | <0.50 | 0.50 |
| Carbon Disulfide | <0.50 | <0.50 | 0.50 |
| Carbon Tetrachloride | <0.50 | <0.50 | 0.50 |
| Chlorobenzene | <0.50 | <0.50 | 0.50 |
| Chloroethane | <0.50 | <0.50 | 0.50 |
| Chloroform | **3.0** | <0.50 | 0.50 |
| Chloromethane | <0.50 | <0.50 | 0.50 |
| 2-Chlorotoluene | <0.50 | <0.50 | 0.50 |
| 4-Chlorotoluene | <0.50 | <0.50 | 0.50 |
| 1,2-Dibromo-3-chloropropane | <1.0 | <1.0 | 1.0 |
| Dibromochloromethane | <0.50 | <0.50 | 0.50 |
| 1,2-Dibromoethane (EDB) | <0.50 | <0.50 | 0.50 |
| Dibromomethane | <0.50 | <0.50 | 0.50 |
| 1,3-Dichlorobenzene | <0.50 | <0.50 | 0.50 |
| 1,2-Dichlorobenzene | <0.50 | <0.50 | 0.50 |

**Viorel Vasile**
Operations Manager

# LABORATORY ANALYSIS RESULTS

**Client:** Stantec (TO)
**Project No:** 2057123300
**Project Name:** Grayson Power Plant Glendale Phase II
**Method:** VOCs, OXY & TPH Gasoline by GC/MS

**AA Project No:** A732174
**Date Received:** 04/27/16
**Date Reported:** 05/10/16
**Units:** ug/L

| | | | |
|---|---|---|---|
| **Date Sampled:** | 04/27/16 | 04/27/16 | |
| **Date Prepared:** | 04/29/16 | 04/29/16 | |
| **Date Analyzed:** | 04/30/16 | 04/30/16 | |
| **AA ID No:** | 6D27022-04 | 6D27022-17 | |
| **Client ID No:** | SB-12-GW | Trip Blank | |
| **Matrix:** | Water | Water | |
| **Dilution Factor:** | 1 | 1 | MRL |
| **8260B+OXY+TPHG (EPA 8260B) (continued)** | | | |
| 1,4-Dichlorobenzene | <0.50 | <0.50 | 0.50 |
| Dichlorodifluoromethane (R12) | <0.50 | <0.50 | 0.50 |
| 1,1-Dichloroethane | **2.6** | <0.50 | 0.50 |
| 1,2-Dichloroethane (EDC) | <0.50 | <0.50 | 0.50 |
| 1,1-Dichloroethylene | **17** | <0.50 | 0.50 |
| trans-1,2-Dichloroethylene | <0.50 | <0.50 | 0.50 |
| cis-1,2-Dichloroethylene | **5.0** | <0.50 | 0.50 |
| 1,2-Dichloropropane | <0.50 | <0.50 | 0.50 |
| 2,2-Dichloropropane | <0.50 | <0.50 | 0.50 |
| 1,3-Dichloropropane | <0.50 | <0.50 | 0.50 |
| cis-1,3-Dichloropropylene | <0.50 | <0.50 | 0.50 |
| trans-1,3-Dichloropropylene | <0.50 | <0.50 | 0.50 |
| 1,1-Dichloropropylene | <0.50 | <0.50 | 0.50 |
| Diisopropyl ether (DIPE) | <2.0 | <2.0 | 2.0 |
| Ethylbenzene | <0.50 | <0.50 | 0.50 |
| Ethyl-tert-Butyl Ether (ETBE) | <2.0 | <2.0 | 2.0 |
| Gasoline Range Organics (GRO) | **500 [4] [5]** | <100 | 100 |
| Hexachlorobutadiene | <1.0 | <1.0 | 1.0 |
| 2-Hexanone (MBK) | <10 | <10 | 10 |
| Isopropylbenzene | <0.50 | <0.50 | 0.50 |
| 4-Isopropyltoluene | <1.0 | <1.0 | 1.0 |
| Methyl-tert-Butyl Ether (MTBE) | <2.0 | <2.0 | 2.0 |
| Methylene Chloride | <5.0 | <5.0 | 5.0 |
| 4-Methyl-2-pentanone (MIBK) | <10 | <10 | 10 |
| Naphthalene | <2.0 | <2.0 | 2.0 |
| n-Propylbenzene | <0.50 | <0.50 | 0.50 |

**Viorel Vasile**
Operations Manager

# LABORATORY ANALYSIS RESULTS

**Client:** Stantec (TO)
**Project No:** 2057123300
**Project Name:** Grayson Power Plant Glendale Phase II
**Method:** VOCs, OXY & TPH Gasoline by GC/MS

**AA Project No:** A732174
**Date Received:** 04/27/16
**Date Reported:** 05/10/16
**Units:** ug/L

| | | | |
|---|---|---|---|
| **Date Sampled:** | 04/27/16 | 04/27/16 | |
| **Date Prepared:** | 04/29/16 | 04/29/16 | |
| **Date Analyzed:** | 04/30/16 | 04/30/16 | |
| **AA ID No:** | 6D27022-04 | 6D27022-17 | |
| **Client ID No:** | SB-12-GW | Trip Blank | |
| **Matrix:** | Water | Water | |
| **Dilution Factor:** | 1 | 1 | MRL |
| **8260B+OXY+TPHG (EPA 8260B) (continued)** | | | |
| Styrene | <0.50 | <0.50 | 0.50 |
| 1,1,1,2-Tetrachloroethane | <0.50 | <0.50 | 0.50 |
| 1,1,2,2-Tetrachloroethane | <0.50 | <0.50 | 0.50 |
| Tetrachloroethylene (PCE) | **8.7** | <0.50 | 0.50 |
| Toluene | <0.50 | <0.50 | 0.50 |
| 1,2,3-Trichlorobenzene | <0.50 | <0.50 | 0.50 |
| 1,2,4-Trichlorobenzene | <0.50 | <0.50 | 0.50 |
| 1,1,1-Trichloroethane | <0.50 | <0.50 | 0.50 |
| 1,1,2-Trichloroethane | <0.50 | <0.50 | 0.50 |
| Trichloroethylene (TCE) | **320** | <0.50 | 0.50 |
| Trichlorofluoromethane (R11) | <0.50 | <0.50 | 0.50 |
| 1,2,3-Trichloropropane | <0.50 | <0.50 | 0.50 |
| 1,1,2-Trichloro-1,2,2-trifluoroethane (R113) | <0.50 | <0.50 | 0.50 |
| 1,3,5-Trimethylbenzene | <0.50 | <0.50 | 0.50 |
| 1,2,4-Trimethylbenzene | <0.50 | <0.50 | 0.50 |
| Vinyl chloride | <0.50 | <0.50 | 0.50 |
| o-Xylene | <0.50 | <0.50 | 0.50 |
| m,p-Xylenes | <1.0 | <1.0 | 1.0 |
| **Surrogates** | | | **%REC Limits** |
| 4-Bromofluorobenzene | 118% | 130% | 70-140 |
| Dibromofluoromethane | 81% | 89% | 70-140 |
| Toluene-d8 | 108% | 105% | 70-140 |

**Viorel Vasile**
Operations Manager

# LABORATORY ANALYSIS RESULTS

| | | | |
|---|---|---|---|
| **Client:** | Stantec (TO) | **AA Project No:** | A732174 |
| **Project No:** | 2057123300 | **Date Received:** | 04/27/16 |
| **Project Name:** | Grayson Power Plant Glendale Phase II | **Date Reported:** | 05/10/16 |
| **Method:** | Total Metals CAM 17 | **Units:** | mg/L |

| | | |
|---|---|---|
| **Date Sampled:** | 04/27/16 | |
| **Date Prepared:** | 05/03/16 | |
| **Date Analyzed:** | 05/04/16 | |
| **AA ID No:** | 6D27022-04 | |
| **Client ID No:** | SB-12-GW | |
| **Matrix:** | Water | |
| **Dilution Factor:** | 1 | MRL |

**CAM Metals Less Hg 6000/7000 (EPA 6010B/7000)**

| | | |
|---|---|---|
| Antimony | <0.20 | 0.20 |
| Arsenic | **0.014** | 0.0070 |
| Barium | **1.1** | 0.20 |
| Beryllium | <0.020 | 0.020 |
| Cadmium | <0.020 | 0.020 |
| Chromium | **0.68** | 0.050 |
| Cobalt | **0.19** | 0.050 |
| Copper | **0.23** | 0.050 |
| Lead | **0.088** | 0.0050 |
| Molybdenum | **0.15** | 0.050 |
| Nickel | **0.26** | 0.050 |
| Selenium | <0.0050 | 0.0050 |
| Silver | <0.020 | 0.020 |
| Thallium | <0.10 | 0.10 |
| Vanadium | **0.39** | 0.20 |
| Zinc | **0.40** | 0.050 |

**Viorel Vasile**
Operations Manager

# LABORATORY ANALYSIS RESULTS

**Client:** Stantec (TO)
**Project No:** 2057123300
**Project Name:** Grayson Power Plant Glendale Phase II
**Method:** VOCs, OXY & TPHG by GC/MS EPA 5035

**AA Project No:** A732174
**Date Received:** 04/27/16
**Date Reported:** 05/10/16
**Units:** mg/kg

| | | | | | |
|---|---|---|---|---|---|
| **Date Sampled:** | 04/27/16 | 04/27/16 | 04/27/16 | 04/27/16 | |
| **Date Prepared:** | 05/04/16 | 05/04/16 | 05/04/16 | 05/04/16 | |
| **Date Analyzed:** | 05/04/16 | 05/04/16 | 05/04/16 | 05/04/16 | |
| **AA ID No:** | 6D27022-01 | 6D27022-03 | 6D27022-06 | 6D27022-07 | |
| **Client ID No:** | SB-12-20 | SB-12-40 | SB-8-20 | SB-8-25 | |
| **Matrix:** | Soil | Soil | Soil | Soil | |
| **Dilution Factor:** | 1 | 1 | 1 | 1 | MRL |
| **8260B/5035 +OXY+TPHG (EPA 8260B/5035)** | | | | | |
| Acetone | <0.050 | <0.050 | <0.050 | <0.050 | 0.050 |
| tert-Amyl Methyl Ether (TAME) | <0.0050 | <0.0050 | <0.0050 | <0.0050 | 0.0050 |
| Benzene | <0.0020 | <0.0020 | <0.0020 | <0.0020 | 0.0020 |
| Bromobenzene | <0.0050 | <0.0050 | <0.0050 | <0.0050 | 0.0050 |
| Bromochloromethane | <0.0050 | <0.0050 | <0.0050 | <0.0050 | 0.0050 |
| Bromodichloromethane | <0.0050 | <0.0050 | <0.0050 | <0.0050 | 0.0050 |
| Bromoform | <0.0050 | <0.0050 | <0.0050 | <0.0050 | 0.0050 |
| Bromomethane | <0.0050 | <0.0050 | <0.0050 | <0.0050 | 0.0050 |
| 2-Butanone (MEK) | <0.050 | <0.050 | <0.050 | <0.050 | 0.050 |
| tert-Butyl alcohol (TBA) | <0.020 | <0.020 | <0.020 | <0.020 | 0.020 |
| sec-Butylbenzene | <0.0050 | <0.0050 | <0.0050 | <0.0050 | 0.0050 |
| tert-Butylbenzene | <0.0050 | <0.0050 | <0.0050 | <0.0050 | 0.0050 |
| n-Butylbenzene | <0.0050 | <0.0050 | <0.0050 | <0.0050 | 0.0050 |
| Carbon Disulfide | <0.0050 | <0.0050 | <0.0050 | <0.0050 | 0.0050 |
| Carbon Tetrachloride | <0.0050 | <0.0050 | <0.0050 | <0.0050 | 0.0050 |
| Chlorobenzene | <0.0050 | <0.0050 | <0.0050 | <0.0050 | 0.0050 |
| Chloroethane | <0.0050 | <0.0050 | <0.0050 | <0.0050 | 0.0050 |
| Chloroform | <0.0050 | <0.0050 | <0.0050 | <0.0050 | 0.0050 |
| Chloromethane | <0.0050 | <0.0050 | <0.0050 | <0.0050 | 0.0050 |
| 2-Chlorotoluene | <0.0050 | <0.0050 | <0.0050 | <0.0050 | 0.0050 |
| 4-Chlorotoluene | <0.0050 | <0.0050 | <0.0050 | <0.0050 | 0.0050 |
| 1,2-Dibromo-3-chloropropane | <0.010 | <0.010 | <0.010 | <0.010 | 0.010 |
| Dibromochloromethane | <0.0050 | <0.0050 | <0.0050 | <0.0050 | 0.0050 |
| 1,2-Dibromoethane (EDB) | <0.0050 | <0.0050 | <0.0050 | <0.0050 | 0.0050 |
| Dibromomethane | <0.0050 | <0.0050 | <0.0050 | <0.0050 | 0.0050 |
| 1,4-Dichlorobenzene | <0.0050 | <0.0050 | <0.0050 | <0.0050 | 0.0050 |
| 1,3-Dichlorobenzene | <0.0050 | <0.0050 | <0.0050 | <0.0050 | 0.0050 |

**Viorel Vasile**
Operations Manager

# LABORATORY ANALYSIS RESULTS

**Client:** Stantec (TO)
**Project No:** 2057123300
**Project Name:** Grayson Power Plant Glendale Phase II
**Method:** VOCs, OXY & TPHG by GC/MS EPA 5035

**AA Project No:** A732174
**Date Received:** 04/27/16
**Date Reported:** 05/10/16
**Units:** mg/kg

| | | | | | |
|---|---|---|---|---|---|
| **Date Sampled:** | 04/27/16 | 04/27/16 | 04/27/16 | 04/27/16 | |
| **Date Prepared:** | 05/04/16 | 05/04/16 | 05/04/16 | 05/04/16 | |
| **Date Analyzed:** | 05/04/16 | 05/04/16 | 05/04/16 | 05/04/16 | |
| **AA ID No:** | 6D27022-01 | 6D27022-03 | 6D27022-06 | 6D27022-07 | |
| **Client ID No:** | SB-12-20 | SB-12-40 | SB-8-20 | SB-8-25 | |
| **Matrix:** | Soil | Soil | Soil | Soil | |
| **Dilution Factor:** | 1 | 1 | 1 | 1 | MRL |
| **8260B/5035 +OXY+TPHG (EPA 8260B/5035) (continued)** | | | | | |
| 1,2-Dichlorobenzene | <0.0050 | <0.0050 | <0.0050 | <0.0050 | 0.0050 |
| Dichlorodifluoromethane (R12) | <0.0050 | <0.0050 | <0.0050 | <0.0050 | 0.0050 |
| 1,1-Dichloroethane | <0.0050 | <0.0050 | <0.0050 | <0.0050 | 0.0050 |
| 1,2-Dichloroethane (EDC) | <0.0050 | <0.0050 | <0.0050 | <0.0050 | 0.0050 |
| trans-1,2-Dichloroethylene | <0.0050 | <0.0050 | <0.0050 | <0.0050 | 0.0050 |
| cis-1,2-Dichloroethylene | <0.0050 | <0.0050 | <0.0050 | <0.0050 | 0.0050 |
| 1,1-Dichloroethylene | <0.0050 | <0.0050 | <0.0050 | <0.0050 | 0.0050 |
| 2,2-Dichloropropane | <0.0050 | <0.0050 | <0.0050 | <0.0050 | 0.0050 |
| 1,3-Dichloropropane | <0.0050 | <0.0050 | <0.0050 | <0.0050 | 0.0050 |
| 1,2-Dichloropropane | <0.0050 | <0.0050 | <0.0050 | <0.0050 | 0.0050 |
| trans-1,3-Dichloropropylene | <0.0050 | <0.0050 | <0.0050 | <0.0050 | 0.0050 |
| 1,1-Dichloropropylene | <0.0050 | <0.0050 | <0.0050 | <0.0050 | 0.0050 |
| cis-1,3-Dichloropropylene | <0.0050 | <0.0050 | <0.0050 | <0.0050 | 0.0050 |
| Diisopropyl ether (DIPE) | <0.0050 | <0.0050 | <0.0050 | <0.0050 | 0.0050 |
| Ethylbenzene | <0.0020 | <0.0020 | <0.0020 | <0.0020 | 0.0020 |
| Ethyl-tert-Butyl Ether (ETBE) | <0.0050 | <0.0050 | <0.0050 | <0.0050 | 0.0050 |
| Gasoline Range Organics (GRO) | <0.50 | <0.50 | <0.50 | **1.7** | 0.50 |
| Hexachlorobutadiene | <0.010 | <0.010 | <0.010 | <0.010 | 0.010 |
| 2-Hexanone (MBK) | <0.050 | <0.050 | <0.050 | <0.050 | 0.050 |
| Isopropylbenzene | <0.0050 | <0.0050 | <0.0050 | <0.0050 | 0.0050 |
| 4-Isopropyltoluene | <0.0050 | <0.0050 | <0.0050 | <0.0050 | 0.0050 |
| Methyl-tert-Butyl Ether (MTBE) | <0.0050 | <0.0050 | <0.0050 | <0.0050 | 0.0050 |
| Methylene Chloride | <0.050 | <0.050 | <0.050 | <0.050 | 0.050 |
| 4-Methyl-2-pentanone (MIBK) | <0.050 | <0.050 | <0.050 | <0.050 | 0.050 |
| Naphthalene | <0.010 | <0.010 | <0.010 | <0.010 | 0.010 |
| n-Propylbenzene | <0.0050 | <0.0050 | <0.0050 | <0.0050 | 0.0050 |

**Viorel Vasile**
Operations Manager

# LABORATORY ANALYSIS RESULTS

**Client:** Stantec (TO)
**Project No:** 2057123300
**Project Name:** Grayson Power Plant Glendale Phase II
**Method:** VOCs, OXY & TPHG by GC/MS EPA 5035

**AA Project No:** A732174
**Date Received:** 04/27/16
**Date Reported:** 05/10/16
**Units:** mg/kg

| | | | | | |
|---|---|---|---|---|---|
| **Date Sampled:** | 04/27/16 | 04/27/16 | 04/27/16 | 04/27/16 | |
| **Date Prepared:** | 05/04/16 | 05/04/16 | 05/04/16 | 05/04/16 | |
| **Date Analyzed:** | 05/04/16 | 05/04/16 | 05/04/16 | 05/04/16 | |
| **AA ID No:** | 6D27022-01 | 6D27022-03 | 6D27022-06 | 6D27022-07 | |
| **Client ID No:** | SB-12-20 | SB-12-40 | SB-8-20 | SB-8-25 | |
| **Matrix:** | Soil | Soil | Soil | Soil | |
| **Dilution Factor:** | 1 | 1 | 1 | 1 | MRL |
| **8260B/5035 +OXY+TPHG (EPA 8260B/5035) (continued)** | | | | | |
| Styrene | <0.0050 | <0.0050 | <0.0050 | <0.0050 | 0.0050 |
| 1,1,1,2-Tetrachloroethane | <0.0050 | <0.0050 | <0.0050 | <0.0050 | 0.0050 |
| 1,1,2,2-Tetrachloroethane | <0.0050 | <0.0050 | <0.0050 | <0.0050 | 0.0050 |
| Tetrachloroethylene (PCE) | <0.0050 | <0.0050 | <0.0050 | <0.0050 | 0.0050 |
| Toluene | <0.0020 | <0.0020 | <0.0020 | <0.0020 | 0.0020 |
| 1,2,4-Trichlorobenzene | <0.0050 | <0.0050 | <0.0050 | <0.0050 | 0.0050 |
| 1,2,3-Trichlorobenzene | <0.0050 | <0.0050 | <0.0050 | <0.0050 | 0.0050 |
| 1,1,2-Trichloroethane | <0.0050 | <0.0050 | <0.0050 | <0.0050 | 0.0050 |
| 1,1,1-Trichloroethane | <0.0050 | <0.0050 | <0.0050 | <0.0050 | 0.0050 |
| Trichloroethylene (TCE) | <0.0050 | <0.0050 | <0.0050 | <0.0050 | 0.0050 |
| Trichlorofluoromethane (R11) | <0.0050 | <0.0050 | <0.0050 | <0.0050 | 0.0050 |
| 1,2,3-Trichloropropane | <0.0050 | <0.0050 | <0.0050 | <0.0050 | 0.0050 |
| 1,1,2-Trichloro-1,2,2-trifluoroethane (R113) | <0.0050 | <0.0050 | <0.0050 | <0.0050 | 0.0050 |
| 1,3,5-Trimethylbenzene | <0.0050 | <0.0050 | <0.0050 | <0.0050 | 0.0050 |
| 1,2,4-Trimethylbenzene | <0.0050 | <0.0050 | <0.0050 | <0.0050 | 0.0050 |
| Vinyl chloride | <0.0050 | <0.0050 | <0.0050 | <0.0050 | 0.0050 |
| o-Xylene | <0.0020 | <0.0020 | <0.0020 | <0.0020 | 0.0020 |
| m,p-Xylenes | <0.0020 | <0.0020 | <0.0020 | <0.0020 | 0.0020 |
| **Surrogates** | | | | | **%REC Limits** |
| 4-Bromofluorobenzene | 113% | 120% | 111% | 106% | 70-140 |
| Dibromofluoromethane | 102% | 106% | 105% | 93% | 70-140 |
| Toluene-d8 | 101% | 104% | 104% | 113% | 70-140 |

**Viorel Vasile**
Operations Manager

# LABORATORY ANALYSIS RESULTS

**Client:** Stantec (TO)
**Project No:** 2057123300
**Project Name:** Grayson Power Plant Glendale Phase II
**Method:** VOCs, OXY & TPHG by GC/MS EPA 5035

**AA Project No:** A732174
**Date Received:** 04/27/16
**Date Reported:** 05/10/16
**Units:** mg/kg

| | | | | | |
|---|---|---|---|---|---|
| **Date Sampled:** | 04/27/16 | 04/27/16 | 04/27/16 | 04/27/16 | |
| **Date Prepared:** | 05/04/16 | 05/04/16 | 05/04/16 | 05/04/16 | |
| **Date Analyzed:** | 05/04/16 | 05/04/16 | 05/04/16 | 05/04/16 | |
| **AA ID No:** | 6D27022-10 | 6D27022-12 | 6D27022-14 | 6D27022-15 | |
| **Client ID No:** | SB-6-10 | SB-6-35 | SB-7-10 | SB-7-15 | |
| **Matrix:** | Soil | Soil | Soil | Soil | |
| **Dilution Factor:** | 1 | 1 | 1 | 1 | MRL |
| **8260B/5035 +OXY+TPHG (EPA 8260B/5035)** | | | | | |
| Acetone | <0.050 | <0.050 | <0.050 | <0.050 | 0.050 |
| tert-Amyl Methyl Ether (TAME) | <0.0050 | <0.0050 | <0.0050 | <0.0050 | 0.0050 |
| Benzene | <0.0020 | <0.0020 | <0.0020 | <0.0020 | 0.0020 |
| Bromobenzene | <0.0050 | <0.0050 | <0.0050 | <0.0050 | 0.0050 |
| Bromochloromethane | <0.0050 | <0.0050 | <0.0050 | <0.0050 | 0.0050 |
| Bromodichloromethane | <0.0050 | <0.0050 | <0.0050 | <0.0050 | 0.0050 |
| Bromoform | <0.0050 | <0.0050 | <0.0050 | <0.0050 | 0.0050 |
| Bromomethane | <0.0050 | <0.0050 | <0.0050 | <0.0050 | 0.0050 |
| 2-Butanone (MEK) | <0.050 | <0.050 | <0.050 | <0.050 | 0.050 |
| tert-Butyl alcohol (TBA) | <0.020 | <0.020 | <0.020 | <0.020 | 0.020 |
| sec-Butylbenzene | <0.0050 | <0.0050 | <0.0050 | <0.0050 | 0.0050 |
| tert-Butylbenzene | <0.0050 | <0.0050 | <0.0050 | <0.0050 | 0.0050 |
| n-Butylbenzene | <0.0050 | <0.0050 | <0.0050 | <0.0050 | 0.0050 |
| Carbon Disulfide | <0.0050 | <0.0050 | <0.0050 | <0.0050 | 0.0050 |
| Carbon Tetrachloride | <0.0050 | <0.0050 | <0.0050 | <0.0050 | 0.0050 |
| Chlorobenzene | <0.0050 | <0.0050 | <0.0050 | <0.0050 | 0.0050 |
| Chloroethane | <0.0050 | <0.0050 | <0.0050 | <0.0050 | 0.0050 |
| Chloroform | <0.0050 | <0.0050 | <0.0050 | <0.0050 | 0.0050 |
| Chloromethane | <0.0050 | <0.0050 | <0.0050 | <0.0050 | 0.0050 |
| 2-Chlorotoluene | <0.0050 | <0.0050 | <0.0050 | <0.0050 | 0.0050 |
| 4-Chlorotoluene | <0.0050 | <0.0050 | <0.0050 | <0.0050 | 0.0050 |
| 1,2-Dibromo-3-chloropropane | <0.010 | <0.010 | <0.010 | <0.010 | 0.010 |
| Dibromochloromethane | <0.0050 | <0.0050 | <0.0050 | <0.0050 | 0.0050 |
| 1,2-Dibromoethane (EDB) | <0.0050 | <0.0050 | <0.0050 | <0.0050 | 0.0050 |
| Dibromomethane | <0.0050 | <0.0050 | <0.0050 | <0.0050 | 0.0050 |
| 1,4-Dichlorobenzene | <0.0050 | <0.0050 | <0.0050 | <0.0050 | 0.0050 |
| 1,3-Dichlorobenzene | <0.0050 | <0.0050 | <0.0050 | <0.0050 | 0.0050 |

**Viorel Vasile**
Operations Manager

# LABORATORY ANALYSIS RESULTS

**Client:** Stantec (TO)
**Project No:** 2057123300
**Project Name:** Grayson Power Plant Glendale Phase II
**Method:** VOCs, OXY & TPHG by GC/MS EPA 5035

**AA Project No:** A732174
**Date Received:** 04/27/16
**Date Reported:** 05/10/16
**Units:** mg/kg

| | | | | | |
|---|---|---|---|---|---|
| **Date Sampled:** | 04/27/16 | 04/27/16 | 04/27/16 | 04/27/16 | |
| **Date Prepared:** | 05/04/16 | 05/04/16 | 05/04/16 | 05/04/16 | |
| **Date Analyzed:** | 05/04/16 | 05/04/16 | 05/04/16 | 05/04/16 | |
| **AA ID No:** | 6D27022-10 | 6D27022-12 | 6D27022-14 | 6D27022-15 | |
| **Client ID No:** | SB-6-10 | SB-6-35 | SB-7-10 | SB-7-15 | |
| **Matrix:** | Soil | Soil | Soil | Soil | |
| **Dilution Factor:** | 1 | 1 | 1 | 1 | MRL |
| **8260B/5035 +OXY+TPHG (EPA 8260B/5035) (continued)** | | | | | |
| 1,2-Dichlorobenzene | <0.0050 | <0.0050 | <0.0050 | <0.0050 | 0.0050 |
| Dichlorodifluoromethane (R12) | <0.0050 | <0.0050 | <0.0050 | <0.0050 | 0.0050 |
| 1,1-Dichloroethane | <0.0050 | <0.0050 | <0.0050 | <0.0050 | 0.0050 |
| 1,2-Dichloroethane (EDC) | <0.0050 | <0.0050 | <0.0050 | <0.0050 | 0.0050 |
| trans-1,2-Dichloroethylene | <0.0050 | <0.0050 | <0.0050 | <0.0050 | 0.0050 |
| cis-1,2-Dichloroethylene | <0.0050 | <0.0050 | <0.0050 | <0.0050 | 0.0050 |
| 1,1-Dichloroethylene | <0.0050 | <0.0050 | <0.0050 | <0.0050 | 0.0050 |
| 2,2-Dichloropropane | <0.0050 | <0.0050 | <0.0050 | <0.0050 | 0.0050 |
| 1,3-Dichloropropane | <0.0050 | <0.0050 | <0.0050 | <0.0050 | 0.0050 |
| 1,2-Dichloropropane | <0.0050 | <0.0050 | <0.0050 | <0.0050 | 0.0050 |
| trans-1,3-Dichloropropylene | <0.0050 | <0.0050 | <0.0050 | <0.0050 | 0.0050 |
| 1,1-Dichloropropylene | <0.0050 | <0.0050 | <0.0050 | <0.0050 | 0.0050 |
| cis-1,3-Dichloropropylene | <0.0050 | <0.0050 | <0.0050 | <0.0050 | 0.0050 |
| Diisopropyl ether (DIPE) | <0.0050 | <0.0050 | <0.0050 | <0.0050 | 0.0050 |
| Ethylbenzene | <0.0020 | <0.0020 | <0.0020 | <0.0020 | 0.0020 |
| Ethyl-tert-Butyl Ether (ETBE) | <0.0050 | <0.0050 | <0.0050 | <0.0050 | 0.0050 |
| Gasoline Range Organics (GRO) | <0.50 | <0.50 | <0.50 | <0.50 | 0.50 |
| Hexachlorobutadiene | <0.010 | <0.010 | <0.010 | <0.010 | 0.010 |
| 2-Hexanone (MBK) | <0.050 | <0.050 | <0.050 | <0.050 | 0.050 |
| Isopropylbenzene | <0.0050 | <0.0050 | <0.0050 | <0.0050 | 0.0050 |
| 4-Isopropyltoluene | <0.0050 | <0.0050 | <0.0050 | <0.0050 | 0.0050 |
| Methyl-tert-Butyl Ether (MTBE) | <0.0050 | <0.0050 | <0.0050 | <0.0050 | 0.0050 |
| Methylene Chloride | <0.050 | <0.050 | <0.050 | <0.050 | 0.050 |
| 4-Methyl-2-pentanone (MIBK) | <0.050 | <0.050 | <0.050 | <0.050 | 0.050 |
| Naphthalene | <0.010 | <0.010 | <0.010 | <0.010 | 0.010 |
| n-Propylbenzene | <0.0050 | <0.0050 | <0.0050 | <0.0050 | 0.0050 |

**Viorel Vasile**
Operations Manager

# LABORATORY ANALYSIS RESULTS

**Client:** Stantec (TO)
**Project No:** 2057123300
**Project Name:** Grayson Power Plant Glendale Phase II
**Method:** VOCs, OXY & TPHG by GC/MS EPA 5035

**AA Project No:** A732174
**Date Received:** 04/27/16
**Date Reported:** 05/10/16
**Units:** mg/kg

| | | | | | |
|---|---|---|---|---|---|
| **Date Sampled:** | 04/27/16 | 04/27/16 | 04/27/16 | 04/27/16 | |
| **Date Prepared:** | 05/04/16 | 05/04/16 | 05/04/16 | 05/04/16 | |
| **Date Analyzed:** | 05/04/16 | 05/04/16 | 05/04/16 | 05/04/16 | |
| **AA ID No:** | 6D27022-10 | 6D27022-12 | 6D27022-14 | 6D27022-15 | |
| **Client ID No:** | SB-6-10 | SB-6-35 | SB-7-10 | SB-7-15 | |
| **Matrix:** | Soil | Soil | Soil | Soil | |
| **Dilution Factor:** | 1 | 1 | 1 | 1 | MRL |
| **8260B/5035 +OXY+TPHG (EPA 8260B/5035) (continued)** | | | | | |
| Styrene | <0.0050 | <0.0050 | <0.0050 | <0.0050 | 0.0050 |
| 1,1,1,2-Tetrachloroethane | <0.0050 | <0.0050 | <0.0050 | <0.0050 | 0.0050 |
| 1,1,2,2-Tetrachloroethane | <0.0050 | <0.0050 | <0.0050 | <0.0050 | 0.0050 |
| Tetrachloroethylene (PCE) | <0.0050 | <0.0050 | <0.0050 | <0.0050 | 0.0050 |
| Toluene | <0.0020 | <0.0020 | <0.0020 | <0.0020 | 0.0020 |
| 1,2,4-Trichlorobenzene | <0.0050 | <0.0050 | <0.0050 | <0.0050 | 0.0050 |
| 1,2,3-Trichlorobenzene | <0.0050 | <0.0050 | <0.0050 | <0.0050 | 0.0050 |
| 1,1,2-Trichloroethane | <0.0050 | <0.0050 | <0.0050 | <0.0050 | 0.0050 |
| 1,1,1-Trichloroethane | <0.0050 | <0.0050 | <0.0050 | <0.0050 | 0.0050 |
| Trichloroethylene (TCE) | <0.0050 | <0.0050 | <0.0050 | <0.0050 | 0.0050 |
| Trichlorofluoromethane (R11) | <0.0050 | <0.0050 | <0.0050 | <0.0050 | 0.0050 |
| 1,2,3-Trichloropropane | <0.0050 | <0.0050 | <0.0050 | <0.0050 | 0.0050 |
| 1,1,2-Trichloro-1,2,2-trifluoroethane (R113) | <0.0050 | <0.0050 | <0.0050 | <0.0050 | 0.0050 |
| 1,3,5-Trimethylbenzene | <0.0050 | <0.0050 | <0.0050 | <0.0050 | 0.0050 |
| 1,2,4-Trimethylbenzene | <0.0050 | <0.0050 | <0.0050 | <0.0050 | 0.0050 |
| Vinyl chloride | <0.0050 | <0.0050 | <0.0050 | <0.0050 | 0.0050 |
| o-Xylene | <0.0020 | <0.0020 | <0.0020 | <0.0020 | 0.0020 |
| m,p-Xylenes | <0.0020 | <0.0020 | <0.0020 | <0.0020 | 0.0020 |
| **Surrogates** | | | | | **%REC Limits** |
| 4-Bromofluorobenzene | 116% | 113% | 115% | 137% | 70-140 |
| Dibromofluoromethane | 106% | 104% | 112% | 109% | 70-140 |
| Toluene-d8 | 102% | 103% | 103% | 111% | 70-140 |

**Viorel Vasile**
Operations Manager

# LABORATORY ANALYSIS RESULTS

**Client:** Stantec (TO)
**Project No:** 2057123300
**Project Name:** Grayson Power Plant Glendale Phase II

**AA Project No:** A732174
**Date Received:** 04/27/16
**Date Reported:** 05/10/16

| Analyte | Result | Reporting Limit | Units | Spike Level | Source Result | %REC | %REC Limits | RPD | RPD Limit | Notes |
|---|---|---|---|---|---|---|---|---|---|---|
| **Cations by Ion Chromatography - Quality Control** | | | | | | | | | | |
| *Batch B6D2727 - NO PREP* | | | | | | | | | | |
| **Blank (B6D2727-BLK1)** | | | | Prepared & Analyzed: 04/27/16 | | | | | | |
| Chromium (VI) | <0.30 | 0.30 | ug/L | | | | | | | |
| **LCS (B6D2727-BS1)** | | | | Prepared & Analyzed: 04/27/16 | | | | | | |
| Chromium (VI) | **2.28** | 0.30 | ug/L | 2.0 | | 114 | 80-120 | | 20 | |
| **LCS Dup (B6D2727-BSD1)** | | | | Prepared & Analyzed: 04/27/16 | | | | | | |
| Chromium (VI) | **2.22** | 0.30 | ug/L | 2.0 | | 111 | 80-120 | 2.53 | 20 | |
| **Duplicate (B6D2727-DUP1)** | | | **Source: 6D27022-04** | Prepared & Analyzed: 04/27/16 | | | | | | |
| Chromium (VI) | **<0.30** | 0.30 | ug/L | | <0.30 | | | | 30 | |
| **Matrix Spike (B6D2727-MS1)** | | | **Source: 6D27022-04** | Prepared & Analyzed: 04/27/16 | | | | | | |
| Chromium (VI) | **2.25** | 0.30 | ug/L | 2.0 | <0.30 | 112 | 70-130 | | 20 | |
| **Matrix Spike Dup (B6D2727-MSD1)** | | | **Source: 6D27022-04** | Prepared & Analyzed: 04/27/16 | | | | | | |
| Chromium (VI) | **1.94** | 0.30 | ug/L | 2.0 | <0.30 | 96.8 | 70-130 | 15.0 | 20 | |
| *Batch B6D2904 - NO PREP* | | | | | | | | | | |
| **Blank (B6D2904-BLK1)** | | | | Prepared & Analyzed: 04/29/16 | | | | | | |
| Chromium (VI) | <0.040 | 0.040 | mg/kg | | | | | | | |
| **LCS (B6D2904-BS1)** | | | | Prepared & Analyzed: 04/29/16 | | | | | | |
| Chromium (VI) | **0.186** | 0.040 | mg/kg | 0.20 | | 93.1 | 80-120 | | | |
| **LCS Dup (B6D2904-BSD1)** | | | | Prepared & Analyzed: 04/29/16 | | | | | | |
| Chromium (VI) | **0.190** | 0.040 | mg/kg | 0.20 | | 95.0 | 80-120 | 2.02 | 20 | |
| **Duplicate (B6D2904-DUP1)** | | | **Source: 6D26016-09** | Prepared & Analyzed: 04/29/16 | | | | | | |
| Chromium (VI) | **<0.040** | 0.040 | mg/kg | | | | | | 40 | |
| **Matrix Spike (B6D2904-MS1)** | | | **Source: 6D27022-07** | Prepared & Analyzed: 04/29/16 | | | | | | |
| Chromium (VI) | **0.211** | 0.040 | mg/kg | 0.20 | <0.040 | 105 | 70-130 | | | |
| **Matrix Spike Dup (B6D2904-MSD1)** | | | **Source: 6D27022-07** | Prepared & Analyzed: 04/29/16 | | | | | | |
| Chromium (VI) | **0.209** | 0.040 | mg/kg | 0.20 | <0.040 | 104 | 70-130 | 1.05 | 40 | |
| **VOCs, OXY & TPH Gasoline by GC/MS - Quality Control** | | | | | | | | | | |
| *Batch B6E0218 - EPA 5030B* | | | | | | | | | | |
| **Blank (B6E0218-BLK1)** | | | | Prepared & Analyzed: 04/29/16 | | | | | | |
| Acetone | <10 | 10 | ug/L | | | | | | | |
| tert-Amyl Methyl Ether (TAME) | <2.0 | 2.0 | ug/L | | | | | | | |

**Viorel Vasile**
Operations Manager

# LABORATORY ANALYSIS RESULTS

**Client:** Stantec (TO)
**Project No:** 2057123300
**Project Name:** Grayson Power Plant Glendale Phase II

**AA Project No:** A732174
**Date Received:** 04/27/16
**Date Reported:** 05/10/16

| Analyte | Result | Reporting Limit | Units | Spike Level | Source Result | %REC | %REC Limits | RPD | RPD Limit | Notes |
|---|---|---|---|---|---|---|---|---|---|---|
| **VOCs, OXY & TPH Gasoline by GC/MS - Quality Control** | | | | | | | | | | |
| *Batch B6E0218 - EPA 5030B* | | | | | | | | | | |
| **Blank (B6E0218-BLK1) Continued** | | | | Prepared & Analyzed: 04/29/16 | | | | | | |
| Benzene | <0.50 | 0.50 | ug/L | | | | | | | |
| Bromobenzene | <0.50 | 0.50 | ug/L | | | | | | | |
| Bromochloromethane | <0.50 | 0.50 | ug/L | | | | | | | |
| Bromodichloromethane | <0.50 | 0.50 | ug/L | | | | | | | |
| Bromoform | <0.50 | 0.50 | ug/L | | | | | | | |
| Bromomethane | <0.50 | 0.50 | ug/L | | | | | | | |
| 2-Butanone (MEK) | <10 | 10 | ug/L | | | | | | | |
| tert-Butyl alcohol (TBA) | <10 | 10 | ug/L | | | | | | | |
| sec-Butylbenzene | <0.50 | 0.50 | ug/L | | | | | | | |
| tert-Butylbenzene | <0.50 | 0.50 | ug/L | | | | | | | |
| n-Butylbenzene | <0.50 | 0.50 | ug/L | | | | | | | |
| Carbon Disulfide | <0.50 | 0.50 | ug/L | | | | | | | |
| Carbon Tetrachloride | <0.50 | 0.50 | ug/L | | | | | | | |
| Chlorobenzene | <0.50 | 0.50 | ug/L | | | | | | | |
| Chloroethane | <0.50 | 0.50 | ug/L | | | | | | | |
| Chloroform | <0.50 | 0.50 | ug/L | | | | | | | |
| Chloromethane | <0.50 | 0.50 | ug/L | | | | | | | |
| 2-Chlorotoluene | <0.50 | 0.50 | ug/L | | | | | | | |
| 4-Chlorotoluene | <0.50 | 0.50 | ug/L | | | | | | | |
| 1,2-Dibromo-3-chloropropane | <1.0 | 1.0 | ug/L | | | | | | | |
| Dibromochloromethane | <0.50 | 0.50 | ug/L | | | | | | | |
| 1,2-Dibromoethane (EDB) | <0.50 | 0.50 | ug/L | | | | | | | |
| Dibromomethane | <0.50 | 0.50 | ug/L | | | | | | | |
| 1,3-Dichlorobenzene | <0.50 | 0.50 | ug/L | | | | | | | |
| 1,2-Dichlorobenzene | <0.50 | 0.50 | ug/L | | | | | | | |
| 1,4-Dichlorobenzene | <0.50 | 0.50 | ug/L | | | | | | | |
| Dichlorodifluoromethane (R12) | <0.50 | 0.50 | ug/L | | | | | | | |
| 1,1-Dichloroethane | <0.50 | 0.50 | ug/L | | | | | | | |
| 1,2-Dichloroethane (EDC) | <0.50 | 0.50 | ug/L | | | | | | | |
| 1,1-Dichloroethylene | <0.50 | 0.50 | ug/L | | | | | | | |
| trans-1,2-Dichloroethylene | <0.50 | 0.50 | ug/L | | | | | | | |

**Viorel Vasile**
Operations Manager

# LABORATORY ANALYSIS RESULTS

**Client:** Stantec (TO)
**Project No:** 2057123300
**Project Name:** Grayson Power Plant Glendale Phase II

**AA Project No:** A732174
**Date Received:** 04/27/16
**Date Reported:** 05/10/16

| Analyte | Result | Reporting Limit | Units | Spike Level | Source Result | %REC | %REC Limits | RPD | RPD Limit | Notes |
|---|---|---|---|---|---|---|---|---|---|---|
| **VOCs, OXY & TPH Gasoline by GC/MS - Quality Control** | | | | | | | | | | |
| *Batch B6E0218 - EPA 5030B* | | | | | | | | | | |
| **Blank (B6E0218-BLK1) Continued** | | | | Prepared & Analyzed: 04/29/16 | | | | | | |
| cis-1,2-Dichloroethylene | <0.50 | 0.50 | ug/L | | | | | | | |
| 1,2-Dichloropropane | <0.50 | 0.50 | ug/L | | | | | | | |
| 2,2-Dichloropropane | <0.50 | 0.50 | ug/L | | | | | | | |
| 1,3-Dichloropropane | <0.50 | 0.50 | ug/L | | | | | | | |
| cis-1,3-Dichloropropylene | <0.50 | 0.50 | ug/L | | | | | | | |
| trans-1,3-Dichloropropylene | <0.50 | 0.50 | ug/L | | | | | | | |
| 1,1-Dichloropropylene | <0.50 | 0.50 | ug/L | | | | | | | |
| Diisopropyl ether (DIPE) | <2.0 | 2.0 | ug/L | | | | | | | |
| Ethylbenzene | <0.50 | 0.50 | ug/L | | | | | | | |
| Ethyl-tert-Butyl Ether (ETBE) | <2.0 | 2.0 | ug/L | | | | | | | |
| Gasoline Range Organics (GRO) | <100 | 100 | ug/L | | | | | | | |
| Hexachlorobutadiene | <1.0 | 1.0 | ug/L | | | | | | | |
| 2-Hexanone (MBK) | <10 | 10 | ug/L | | | | | | | |
| Isopropylbenzene | <0.50 | 0.50 | ug/L | | | | | | | |
| 4-Isopropyltoluene | <1.0 | 1.0 | ug/L | | | | | | | |
| Methyl-tert-Butyl Ether (MTBE) | <2.0 | 2.0 | ug/L | | | | | | | |
| Methylene Chloride | <5.0 | 5.0 | ug/L | | | | | | | |
| 4-Methyl-2-pentanone (MIBK) | <10 | 10 | ug/L | | | | | | | |
| Naphthalene | <2.0 | 2.0 | ug/L | | | | | | | |
| n-Propylbenzene | <0.50 | 0.50 | ug/L | | | | | | | |
| Styrene | <0.50 | 0.50 | ug/L | | | | | | | |
| 1,1,1,2-Tetrachloroethane | <0.50 | 0.50 | ug/L | | | | | | | |
| 1,1,2,2-Tetrachloroethane | <0.50 | 0.50 | ug/L | | | | | | | |
| Tetrachloroethylene (PCE) | <0.50 | 0.50 | ug/L | | | | | | | |
| Toluene | <0.50 | 0.50 | ug/L | | | | | | | |
| 1,2,3-Trichlorobenzene | <0.50 | 0.50 | ug/L | | | | | | | |
| 1,2,4-Trichlorobenzene | <0.50 | 0.50 | ug/L | | | | | | | |
| 1,1,1-Trichloroethane | <0.50 | 0.50 | ug/L | | | | | | | |
| 1,1,2-Trichloroethane | <0.50 | 0.50 | ug/L | | | | | | | |
| Trichloroethylene (TCE) | <0.50 | 0.50 | ug/L | | | | | | | |
| Trichlorofluoromethane (R11) | <0.50 | 0.50 | ug/L | | | | | | | |

**Viorel Vasile**
Operations Manager

# LABORATORY ANALYSIS RESULTS

**Client:** Stantec (TO)
**Project No:** 2057123300
**Project Name:** Grayson Power Plant Glendale Phase II

**AA Project No:** A732174
**Date Received:** 04/27/16
**Date Reported:** 05/10/16

| Analyte | Result | Reporting Limit | Units | Spike Level | Source Result | %REC | %REC Limits | RPD | RPD Limit | Notes |
|---|---|---|---|---|---|---|---|---|---|---|
| **VOCs, OXY & TPH Gasoline by GC/MS - Quality Control** | | | | | | | | | | |
| *Batch B6E0218 - EPA 5030B* | | | | | | | | | | |
| **Blank (B6E0218-BLK1) Continued** | | | | Prepared & Analyzed: 04/29/16 | | | | | | |
| 1,2,3-Trichloropropane | <0.50 | 0.50 | ug/L | | | | | | | |
| 1,1,2-Trichloro-1,2,2-trifluoroethane (R113) | <0.50 | 0.50 | ug/L | | | | | | | |
| 1,3,5-Trimethylbenzene | <0.50 | 0.50 | ug/L | | | | | | | |
| 1,2,4-Trimethylbenzene | <0.50 | 0.50 | ug/L | | | | | | | |
| Vinyl chloride | <0.50 | 0.50 | ug/L | | | | | | | |
| o-Xylene | <0.50 | 0.50 | ug/L | | | | | | | |
| m,p-Xylenes | <1.0 | 1.0 | ug/L | | | | | | | |
| *Surrogate: 4-Bromofluorobenzene* | *64.2* | | *ug/L* | *50* | | *128* | *70-140* | | | |
| *Surrogate: Dibromofluoromethane* | *41.2* | | *ug/L* | *50* | | *82.4* | *70-140* | | | |
| *Surrogate: Toluene-d8* | *50.7* | | *ug/L* | *50* | | *101* | *70-140* | | | |
| **LCS (B6E0218-BS1)** | | | | Prepared & Analyzed: 04/29/16 | | | | | | |
| Acetone | **55.6** | 10 | ug/L | 50 | | 111 | 70-130 | | | |
| tert-Amyl Methyl Ether (TAME) | **25.0** | 2.0 | ug/L | 20 | | 125 | 70-130 | | | |
| Benzene | **19.8** | 0.50 | ug/L | 20 | | 99.1 | 75-125 | | | |
| Bromobenzene | **21.9** | 0.50 | ug/L | 20 | | 110 | 70-130 | | | |
| Bromochloromethane | **17.8** | 0.50 | ug/L | 20 | | 89.0 | 70-130 | | | |
| Bromodichloromethane | **20.8** | 0.50 | ug/L | 20 | | 104 | 75-125 | | | |
| Bromoform | **21.3** | 0.50 | ug/L | 20 | | 106 | 75-125 | | | |
| Bromomethane | **22.0** | 0.50 | ug/L | 20 | | 110 | 75-125 | | | |
| 2-Butanone (MEK) | **47.1** | 10 | ug/L | 50 | | 94.2 | 70-130 | | | |
| tert-Butyl alcohol (TBA) | **122** | 10 | ug/L | 100 | | 122 | 70-130 | | | |
| sec-Butylbenzene | **20.5** | 0.50 | ug/L | 20 | | 102 | 70-130 | | | |
| tert-Butylbenzene | **21.4** | 0.50 | ug/L | 20 | | 107 | 70-130 | | | |
| n-Butylbenzene | **19.7** | 0.50 | ug/L | 20 | | 98.6 | 70-130 | | | |
| Carbon Disulfide | **39.7** | 0.50 | ug/L | 50 | | 79.3 | 70-130 | | | |
| Carbon Tetrachloride | **21.3** | 0.50 | ug/L | 20 | | 106 | 75-125 | | | |
| Chlorobenzene | **18.7** | 0.50 | ug/L | 20 | | 93.4 | 75-125 | | | |
| Chloroethane | **16.4** | 0.50 | ug/L | 20 | | 81.8 | 75-125 | | | |
| Chloroform | **19.7** | 0.50 | ug/L | 20 | | 98.3 | 75-125 | | | |
| Chloromethane | **17.3** | 0.50 | ug/L | 20 | | 86.3 | 65-125 | | | |

**Viorel Vasile**
Operations Manager

# LABORATORY ANALYSIS RESULTS

**Client:** Stantec (TO)
**Project No:** 2057123300
**Project Name:** Grayson Power Plant Glendale Phase II

**AA Project No:** A732174
**Date Received:** 04/27/16
**Date Reported:** 05/10/16

| Analyte | Result | Reporting Limit | Units | Spike Level | Source Result | %REC | %REC Limits | RPD | RPD Limit | Notes |
|---|---|---|---|---|---|---|---|---|---|---|
| **VOCs, OXY & TPH Gasoline by GC/MS - Quality Control** | | | | | | | | | | |
| *Batch B6E0218 - EPA 5030B* | | | | | | | | | | |
| **LCS (B6E0218-BS1) Continued** | | | | Prepared & Analyzed: 04/29/16 | | | | | | |
| 2-Chlorotoluene | **20.3** | 0.50 | ug/L | 20 | | 101 | 70-130 | | | |
| 4-Chlorotoluene | **21.0** | 0.50 | ug/L | 20 | | 105 | 70-130 | | | |
| 1,2-Dibromo-3-chloropropane | **23.7** | 1.0 | ug/L | 20 | | 119 | 70-130 | | | |
| Dibromochloromethane | **22.3** | 0.50 | ug/L | 20 | | 111 | 75-125 | | | |
| 1,2-Dibromoethane (EDB) | **19.3** | 0.50 | ug/L | 20 | | 96.4 | 70-130 | | | |
| Dibromomethane | **18.2** | 0.50 | ug/L | 20 | | 90.8 | 70-130 | | | |
| 1,3-Dichlorobenzene | **19.1** | 0.50 | ug/L | 20 | | 95.3 | 70-130 | | | |
| 1,2-Dichlorobenzene | **18.6** | 0.50 | ug/L | 20 | | 92.8 | 70-130 | | | |
| 1,4-Dichlorobenzene | **19.7** | 0.50 | ug/L | 20 | | 98.3 | 75-125 | | | |
| Dichlorodifluoromethane (R12) | **18.6** | 0.50 | ug/L | 20 | | 93.0 | 70-130 | | | |
| 1,1-Dichloroethane | **17.3** | 0.50 | ug/L | 20 | | 86.7 | 70-125 | | | |
| 1,2-Dichloroethane (EDC) | **18.7** | 0.50 | ug/L | 20 | | 93.7 | 75-125 | | | |
| 1,1-Dichloroethylene | **18.4** | 0.50 | ug/L | 20 | | 91.8 | 70-130 | | | |
| trans-1,2-Dichloroethylene | **16.0** | 0.50 | ug/L | 20 | | 80.1 | 75-125 | | | |
| cis-1,2-Dichloroethylene | **16.2** | 0.50 | ug/L | 20 | | 80.8 | 75-125 | | | |
| 1,2-Dichloropropane | **20.6** | 0.50 | ug/L | 20 | | 103 | 75-130 | | | |
| 2,2-Dichloropropane | **17.5** | 0.50 | ug/L | 20 | | 87.3 | 70-130 | | | |
| 1,3-Dichloropropane | **21.6** | 0.50 | ug/L | 20 | | 108 | 70-130 | | | |
| cis-1,3-Dichloropropylene | **19.7** | 0.50 | ug/L | 20 | | 98.4 | 75-125 | | | |
| trans-1,3-Dichloropropylene | **18.2** | 0.50 | ug/L | 20 | | 90.8 | 70-130 | | | |
| 1,1-Dichloropropylene | **19.2** | 0.50 | ug/L | 20 | | 96.1 | 70-130 | | | |
| Diisopropyl ether (DIPE) | **21.6** | 2.0 | ug/L | 20 | | 108 | 70-130 | | | |
| Ethylbenzene | **19.6** | 0.50 | ug/L | 20 | | 98.2 | 75-125 | | | |
| Ethyl-tert-Butyl Ether (ETBE) | **23.2** | 2.0 | ug/L | 20 | | 116 | 70-130 | | | |
| Gasoline Range Organics (GRO) | **519** | 100 | ug/L | 500 | | 104 | 70-130 | | | |
| Hexachlorobutadiene | **21.0** | 1.0 | ug/L | 20 | | 105 | 70-130 | | | |
| 2-Hexanone (MBK) | **61.2** | 10 | ug/L | 50 | | 122 | 70-130 | | | |
| Isopropylbenzene | **22.3** | 0.50 | ug/L | 20 | | 111 | 70-130 | | | |
| 4-Isopropyltoluene | **20.6** | 1.0 | ug/L | 20 | | 103 | 70-130 | | | |
| Methyl-tert-Butyl Ether (MTBE) | **35.2** | 2.0 | ug/L | 40 | | 88.0 | 75-125 | | | |
| Methylene Chloride | **28.3** | 5.0 | ug/L | 20 | | 142 | 75-130 | | | *** |

**Viorel Vasile**
Operations Manager

# LABORATORY ANALYSIS RESULTS

**Client:** Stantec (TO)
**Project No:** 2057123300
**Project Name:** Grayson Power Plant Glendale Phase II

**AA Project No:** A732174
**Date Received:** 04/27/16
**Date Reported:** 05/10/16

| Analyte | Result | Reporting Limit | Units | Spike Level | Source Result | %REC | %REC Limits | RPD | RPD Limit | Notes |
|---|---|---|---|---|---|---|---|---|---|---|
| **VOCs, OXY & TPH Gasoline by GC/MS - Quality Control** | | | | | | | | | | |
| *Batch B6E0218 - EPA 5030B* | | | | | | | | | | |
| **LCS (B6E0218-BS1) Continued** | | | | Prepared & Analyzed: 04/29/16 | | | | | | |
| 4-Methyl-2-pentanone (MIBK) | **55.8** | 10 | ug/L | 50 | | 112 | 70-130 | | | |
| Naphthalene | **18.8** | 2.0 | ug/L | 20 | | 94.1 | 70-130 | | | |
| n-Propylbenzene | **21.0** | 0.50 | ug/L | 20 | | 105 | 70-130 | | | |
| Styrene | **18.1** | 0.50 | ug/L | 20 | | 90.4 | 70-130 | | | |
| 1,1,1,2-Tetrachloroethane | **21.2** | 0.50 | ug/L | 20 | | 106 | 70-130 | | | |
| 1,1,2,2-Tetrachloroethane | **21.6** | 0.50 | ug/L | 20 | | 108 | 70-135 | | | |
| Tetrachloroethylene (PCE) | **21.2** | 0.50 | ug/L | 20 | | 106 | 75-125 | | | |
| Toluene | **19.8** | 0.50 | ug/L | 20 | | 98.8 | 75-125 | | | |
| 1,2,3-Trichlorobenzene | **20.2** | 0.50 | ug/L | 20 | | 101 | 70-130 | | | |
| 1,2,4-Trichlorobenzene | **19.4** | 0.50 | ug/L | 20 | | 97.1 | 70-130 | | | |
| 1,1,1-Trichloroethane | **20.1** | 0.50 | ug/L | 20 | | 100 | 75-125 | | | |
| 1,1,2-Trichloroethane | **22.8** | 0.50 | ug/L | 20 | | 114 | 75-125 | | | |
| Trichloroethylene (TCE) | **19.9** | 0.50 | ug/L | 20 | | 99.6 | 75-125 | | | |
| Trichlorofluoromethane (R11) | **16.6** | 0.50 | ug/L | 20 | | 83.1 | 70-130 | | | |
| 1,2,3-Trichloropropane | **19.2** | 0.50 | ug/L | 20 | | 96.0 | 70-130 | | | |
| 1,1,2-Trichloro-1,2,2-trifluoroethane (R113) | **35.6** | 0.50 | ug/L | 40 | | 89.0 | 70-130 | | | |
| 1,3,5-Trimethylbenzene | **21.4** | 0.50 | ug/L | 20 | | 107 | 70-130 | | | |
| 1,2,4-Trimethylbenzene | **19.5** | 0.50 | ug/L | 20 | | 97.6 | 70-130 | | | |
| Vinyl chloride | **19.4** | 0.50 | ug/L | 20 | | 97.0 | 75-125 | | | |
| o-Xylene | **17.9** | 0.50 | ug/L | 20 | | 89.6 | 75-125 | | | |
| m,p-Xylenes | **37.2** | 1.0 | ug/L | 40 | | 93.1 | 70-130 | | | |
| *Surrogate: 4-Bromofluorobenzene* | *56.9* | | *ug/L* | *50* | | *114* | *70-140* | | | |
| *Surrogate: Dibromofluoromethane* | *43.2* | | *ug/L* | *50* | | *86.4* | *70-140* | | | |
| *Surrogate: Toluene-d8* | *53.2* | | *ug/L* | *50* | | *106* | *70-140* | | | |
| **LCS Dup (B6E0218-BSD1)** | | | | Prepared: 04/29/16 Analyzed: 04/30/16 | | | | | | |
| Acetone | **48.0** | 10 | ug/L | 50 | | 95.9 | 70-130 | 14.8 | 30 | |
| tert-Amyl Methyl Ether (TAME) | **24.3** | 2.0 | ug/L | 20 | | 121 | 70-130 | 3.08 | 30 | |
| Benzene | **19.5** | 0.50 | ug/L | 20 | | 97.4 | 75-125 | 1.68 | 30 | |
| Bromobenzene | **22.3** | 0.50 | ug/L | 20 | | 112 | 70-130 | 1.81 | 30 | |
| Bromochloromethane | **18.0** | 0.50 | ug/L | 20 | | 90.0 | 70-130 | 1.17 | 30 | |

**Viorel Vasile**
Operations Manager

# LABORATORY ANALYSIS RESULTS

**Client:** Stantec (TO)
**Project No:** 2057123300
**Project Name:** Grayson Power Plant Glendale Phase II

**AA Project No:** A732174
**Date Received:** 04/27/16
**Date Reported:** 05/10/16

| Analyte | Result | Reporting Limit | Units | Spike Level | Source Result | %REC | %REC Limits | RPD | RPD Limit | Notes |
|---|---|---|---|---|---|---|---|---|---|---|
| **VOCs, OXY & TPH Gasoline by GC/MS - Quality Control** | | | | | | | | | | |
| *Batch B6E0218 - EPA 5030B* | | | | | | | | | | |
| **LCS Dup (B6E0218-BSD1) Continued** | | | | Prepared: 04/29/16 Analyzed: 04/30/16 | | | | | | |
| Bromodichloromethane | **21.2** | 0.50 | ug/L | 20 | | 106 | 75-125 | 1.57 | 30 | |
| Bromoform | **21.5** | 0.50 | ug/L | 20 | | 108 | 75-125 | 1.12 | 30 | |
| Bromomethane | **24.2** | 0.50 | ug/L | 20 | | 121 | 75-125 | 9.62 | 30 | |
| 2-Butanone (MEK) | **45.5** | 10 | ug/L | 50 | | 91.0 | 70-130 | 3.50 | 30 | |
| tert-Butyl alcohol (TBA) | **115** | 10 | ug/L | 100 | | 115 | 70-130 | 6.13 | 30 | |
| sec-Butylbenzene | **21.6** | 0.50 | ug/L | 20 | | 108 | 70-130 | 5.04 | 30 | |
| tert-Butylbenzene | **22.1** | 0.50 | ug/L | 20 | | 110 | 70-130 | 3.45 | 30 | |
| n-Butylbenzene | **21.4** | 0.50 | ug/L | 20 | | 107 | 70-130 | 8.31 | 30 | |
| Carbon Disulfide | **34.4** | 0.50 | ug/L | 50 | | 68.7 | 70-130 | 14.3 | 30 | ** |
| Carbon Tetrachloride | **21.3** | 0.50 | ug/L | 20 | | 106 | 75-125 | 0.141 | 30 | |
| Chlorobenzene | **19.8** | 0.50 | ug/L | 20 | | 98.9 | 75-125 | 5.72 | 30 | |
| Chloroethane | **16.2** | 0.50 | ug/L | 20 | | 80.9 | 75-125 | 1.11 | 30 | |
| Chloroform | **16.8** | 0.50 | ug/L | 20 | | 83.8 | 75-125 | 15.9 | 30 | |
| Chloromethane | **19.1** | 0.50 | ug/L | 20 | | 95.6 | 65-125 | 10.2 | 30 | |
| 2-Chlorotoluene | **21.4** | 0.50 | ug/L | 20 | | 107 | 70-130 | 5.19 | 30 | |
| 4-Chlorotoluene | **22.9** | 0.50 | ug/L | 20 | | 114 | 70-130 | 8.42 | 30 | |
| 1,2-Dibromo-3-chloropropane | **19.2** | 1.0 | ug/L | 20 | | 95.9 | 70-130 | 21.2 | 30 | |
| Dibromochloromethane | **22.7** | 0.50 | ug/L | 20 | | 113 | 75-125 | 1.82 | 30 | |
| 1,2-Dibromoethane (EDB) | **19.2** | 0.50 | ug/L | 20 | | 95.8 | 70-130 | 0.572 | 30 | |
| Dibromomethane | **18.5** | 0.50 | ug/L | 20 | | 92.6 | 70-130 | 1.96 | 30 | |
| 1,3-Dichlorobenzene | **17.4** | 0.50 | ug/L | 20 | | 87.0 | 70-130 | 9.05 | 30 | |
| 1,2-Dichlorobenzene | **19.6** | 0.50 | ug/L | 20 | | 98.2 | 70-130 | 5.55 | 30 | |
| 1,4-Dichlorobenzene | **20.9** | 0.50 | ug/L | 20 | | 104 | 75-125 | 6.07 | 30 | |
| Dichlorodifluoromethane (R12) | **19.5** | 0.50 | ug/L | 20 | | 97.3 | 70-130 | 4.52 | 30 | |
| 1,1-Dichloroethane | **17.8** | 0.50 | ug/L | 20 | | 88.8 | 70-125 | 2.39 | 30 | |
| 1,2-Dichloroethane (EDC) | **19.5** | 0.50 | ug/L | 20 | | 97.5 | 75-125 | 3.97 | 30 | |
| 1,1-Dichloroethylene | **18.1** | 0.50 | ug/L | 20 | | 90.4 | 70-130 | 1.54 | 30 | |
| trans-1,2-Dichloroethylene | **16.1** | 0.50 | ug/L | 20 | | 80.3 | 75-125 | 0.249 | 30 | |
| cis-1,2-Dichloroethylene | **16.5** | 0.50 | ug/L | 20 | | 82.4 | 75-125 | 1.90 | 30 | |
| 1,2-Dichloropropane | **20.4** | 0.50 | ug/L | 20 | | 102 | 75-130 | 0.928 | 30 | |
| 2,2-Dichloropropane | **16.9** | 0.50 | ug/L | 20 | | 84.6 | 70-130 | 3.08 | 30 | |

**Viorel Vasile**
Operations Manager

# LABORATORY ANALYSIS RESULTS

**Client:** Stantec (TO)
**Project No:** 2057123300
**Project Name:** Grayson Power Plant Glendale Phase II

**AA Project No:** A732174
**Date Received:** 04/27/16
**Date Reported:** 05/10/16

| Analyte | Result | Reporting Limit | Units | Spike Level | Source Result | %REC | %REC Limits | RPD | RPD Limit | Notes |
|---|---|---|---|---|---|---|---|---|---|---|
| **VOCs, OXY & TPH Gasoline by GC/MS - Quality Control** | | | | | | | | | | |
| *Batch B6E0218 - EPA 5030B* | | | | | | | | | | |
| **LCS Dup (B6E0218-BSD1) Continued** | | | | Prepared: 04/29/16 Analyzed: 04/30/16 | | | | | | |
| 1,3-Dichloropropane | **22.5** | 0.50 | ug/L | 20 | | 112 | 70-130 | 4.00 | 30 | |
| cis-1,3-Dichloropropylene | **19.2** | 0.50 | ug/L | 20 | | 96.0 | 75-125 | 2.52 | 30 | |
| trans-1,3-Dichloropropylene | **17.4** | 0.50 | ug/L | 20 | | 87.0 | 70-130 | 4.28 | 30 | |
| 1,1-Dichloropropylene | **18.7** | 0.50 | ug/L | 20 | | 93.5 | 70-130 | 2.74 | 30 | |
| Diisopropyl ether (DIPE) | **21.2** | 2.0 | ug/L | 20 | | 106 | 70-130 | 1.97 | 30 | |
| Ethylbenzene | **21.1** | 0.50 | ug/L | 20 | | 106 | 75-125 | 7.31 | 30 | |
| Ethyl-tert-Butyl Ether (ETBE) | **22.6** | 2.0 | ug/L | 20 | | 113 | 70-130 | 2.53 | 30 | |
| Gasoline Range Organics (GRO) | **587** | 100 | ug/L | 500 | | 117 | 70-130 | 12.3 | 30 | |
| Hexachlorobutadiene | **22.6** | 1.0 | ug/L | 20 | | 113 | 70-130 | 7.25 | 30 | |
| 2-Hexanone (MBK) | **51.6** | 10 | ug/L | 50 | | 103 | 70-130 | 17.0 | 30 | |
| Isopropylbenzene | **22.7** | 0.50 | ug/L | 20 | | 114 | 70-130 | 2.00 | 30 | |
| 4-Isopropyltoluene | **21.8** | 1.0 | ug/L | 20 | | 109 | 70-130 | 5.52 | 30 | |
| Methyl-tert-Butyl Ether (MTBE) | **32.5** | 2.0 | ug/L | 40 | | 81.3 | 75-125 | 8.00 | 30 | |
| Methylene Chloride | **20.1** | 5.0 | ug/L | 20 | | 100 | 75-130 | 34.1 | 30 | |
| 4-Methyl-2-pentanone (MIBK) | **54.6** | 10 | ug/L | 50 | | 109 | 70-130 | 2.07 | 30 | |
| Naphthalene | **18.9** | 2.0 | ug/L | 20 | | 94.5 | 70-130 | 0.424 | 30 | |
| n-Propylbenzene | **21.8** | 0.50 | ug/L | 20 | | 109 | 70-130 | 3.60 | 30 | |
| Styrene | **21.2** | 0.50 | ug/L | 20 | | 106 | 70-130 | 16.0 | 30 | |
| 1,1,1,2-Tetrachloroethane | **22.6** | 0.50 | ug/L | 20 | | 113 | 70-130 | 6.63 | 30 | |
| 1,1,2,2-Tetrachloroethane | **21.9** | 0.50 | ug/L | 20 | | 110 | 70-135 | 1.43 | 30 | |
| Tetrachloroethylene (PCE) | **21.8** | 0.50 | ug/L | 20 | | 109 | 75-125 | 2.84 | 30 | |
| Toluene | **20.5** | 0.50 | ug/L | 20 | | 102 | 75-125 | 3.53 | 30 | |
| 1,2,3-Trichlorobenzene | **21.2** | 0.50 | ug/L | 20 | | 106 | 70-130 | 4.45 | 30 | |
| 1,2,4-Trichlorobenzene | **20.2** | 0.50 | ug/L | 20 | | 101 | 70-130 | 4.09 | 30 | |
| 1,1,1-Trichloroethane | **19.7** | 0.50 | ug/L | 20 | | 98.5 | 75-125 | 1.91 | 30 | |
| 1,1,2-Trichloroethane | **22.7** | 0.50 | ug/L | 20 | | 113 | 75-125 | 0.659 | 30 | |
| Trichloroethylene (TCE) | **19.7** | 0.50 | ug/L | 20 | | 98.7 | 75-125 | 0.908 | 30 | |
| Trichlorofluoromethane (R11) | **17.9** | 0.50 | ug/L | 20 | | 89.5 | 70-130 | 7.42 | 30 | |
| 1,2,3-Trichloropropane | **19.6** | 0.50 | ug/L | 20 | | 97.9 | 70-130 | 1.96 | 30 | |
| 1,1,2-Trichloro-1,2,2-trifluoroethane (R113) | **36.6** | 0.50 | ug/L | 40 | | 91.6 | 70-130 | 2.80 | 30 | |
| 1,3,5-Trimethylbenzene | **22.5** | 0.50 | ug/L | 20 | | 113 | 70-130 | 5.14 | 30 | |

**Viorel Vasile**
Operations Manager

# LABORATORY ANALYSIS RESULTS

**Client:** Stantec (TO)
**Project No:** 2057123300
**Project Name:** Grayson Power Plant Glendale Phase II

**AA Project No:** A732174
**Date Received:** 04/27/16
**Date Reported:** 05/10/16

| Analyte | Result | Reporting Limit | Units | Spike Level | Source Result | %REC | %REC Limits | RPD | RPD Limit | Notes |
|---|---|---|---|---|---|---|---|---|---|---|
| **VOCs, OXY & TPH Gasoline by GC/MS - Quality Control** | | | | | | | | | | |
| *Batch B6E0218 - EPA 5030B* | | | | | | | | | | |
| **LCS Dup (B6E0218-BSD1) Continued** | | | | Prepared: 04/29/16 Analyzed: 04/30/16 | | | | | | |
| 1,2,4-Trimethylbenzene | **20.7** | 0.50 | ug/L | 20 | | 103 | 70-130 | 5.77 | 30 | |
| Vinyl chloride | **20.9** | 0.50 | ug/L | 20 | | 104 | 75-125 | 7.40 | 30 | |
| o-Xylene | **19.4** | 0.50 | ug/L | 20 | | 96.9 | 75-125 | 7.83 | 30 | |
| m,p-Xylenes | **39.8** | 1.0 | ug/L | 40 | | 99.6 | 70-130 | 6.75 | 30 | |
| *Surrogate: 4-Bromofluorobenzene* | *55.5* | | *ug/L* | *50* | | *111* | *70-140* | | | |
| *Surrogate: Dibromofluoromethane* | *43.7* | | *ug/L* | *50* | | *87.4* | *70-140* | | | |
| *Surrogate: Toluene-d8* | *53.0* | | *ug/L* | *50* | | *106* | *70-140* | | | |
| **VOCs, OXY & TPHG by GC/MS EPA 5035 - Quality Control** | | | | | | | | | | |
| *Batch B6E0422 - EPA 5035* | | | | | | | | | | |
| **Blank (B6E0422-BLK1)** | | | | Prepared & Analyzed: 05/04/16 | | | | | | |
| Acetone | <0.050 | 0.050 | mg/kg | | | | | | | |
| tert-Amyl Methyl Ether (TAME) | <0.0050 | 0.0050 | mg/kg | | | | | | | |
| Benzene | <0.0020 | 0.0020 | mg/kg | | | | | | | |
| Bromobenzene | <0.0050 | 0.0050 | mg/kg | | | | | | | |
| Bromochloromethane | <0.0050 | 0.0050 | mg/kg | | | | | | | |
| Bromodichloromethane | <0.0050 | 0.0050 | mg/kg | | | | | | | |
| Bromoform | <0.0050 | 0.0050 | mg/kg | | | | | | | |
| Bromomethane | <0.0050 | 0.0050 | mg/kg | | | | | | | |
| 2-Butanone (MEK) | <0.050 | 0.050 | mg/kg | | | | | | | |
| tert-Butyl alcohol (TBA) | <0.020 | 0.020 | mg/kg | | | | | | | |
| sec-Butylbenzene | <0.0050 | 0.0050 | mg/kg | | | | | | | |
| tert-Butylbenzene | <0.0050 | 0.0050 | mg/kg | | | | | | | |
| n-Butylbenzene | <0.0050 | 0.0050 | mg/kg | | | | | | | |
| Carbon Disulfide | <0.0050 | 0.0050 | mg/kg | | | | | | | |
| Carbon Tetrachloride | <0.0050 | 0.0050 | mg/kg | | | | | | | |
| Chlorobenzene | <0.0050 | 0.0050 | mg/kg | | | | | | | |
| Chloroethane | <0.0050 | 0.0050 | mg/kg | | | | | | | |
| Chloroform | <0.0050 | 0.0050 | mg/kg | | | | | | | |
| Chloromethane | <0.0050 | 0.0050 | mg/kg | | | | | | | |
| 2-Chlorotoluene | <0.0050 | 0.0050 | mg/kg | | | | | | | |
| 4-Chlorotoluene | <0.0050 | 0.0050 | mg/kg | | | | | | | |

**Viorel Vasile**
Operations Manager

# LABORATORY ANALYSIS RESULTS

**Client:** Stantec (TO)
**Project No:** 2057123300
**Project Name:** Grayson Power Plant Glendale Phase II

**AA Project No:** A732174
**Date Received:** 04/27/16
**Date Reported:** 05/10/16

| Analyte | Result | Reporting Limit | Units | Spike Level | Source Result | %REC | %REC Limits | RPD | RPD Limit | Notes |
|---|---|---|---|---|---|---|---|---|---|---|
| **VOCs, OXY & TPHG by GC/MS EPA 5035 - Quality Control** | | | | | | | | | | |
| *Batch B6E0422 - EPA 5035* | | | | | | | | | | |
| **Blank (B6E0422-BLK1) Continued** | | | | Prepared & Analyzed: 05/04/16 | | | | | | |
| 1,2-Dibromo-3-chloropropane | <0.010 | 0.010 | mg/kg | | | | | | | |
| Dibromochloromethane | <0.0050 | 0.0050 | mg/kg | | | | | | | |
| 1,2-Dibromoethane (EDB) | <0.0050 | 0.0050 | mg/kg | | | | | | | |
| Dibromomethane | <0.0050 | 0.0050 | mg/kg | | | | | | | |
| 1,4-Dichlorobenzene | <0.0050 | 0.0050 | mg/kg | | | | | | | |
| 1,3-Dichlorobenzene | <0.0050 | 0.0050 | mg/kg | | | | | | | |
| 1,2-Dichlorobenzene | <0.0050 | 0.0050 | mg/kg | | | | | | | |
| Dichlorodifluoromethane (R12) | <0.0050 | 0.0050 | mg/kg | | | | | | | |
| 1,1-Dichloroethane | <0.0050 | 0.0050 | mg/kg | | | | | | | |
| 1,2-Dichloroethane (EDC) | <0.0050 | 0.0050 | mg/kg | | | | | | | |
| trans-1,2-Dichloroethylene | <0.0050 | 0.0050 | mg/kg | | | | | | | |
| cis-1,2-Dichloroethylene | <0.0050 | 0.0050 | mg/kg | | | | | | | |
| 1,1-Dichloroethylene | <0.0050 | 0.0050 | mg/kg | | | | | | | |
| 2,2-Dichloropropane | <0.0050 | 0.0050 | mg/kg | | | | | | | |
| 1,3-Dichloropropane | <0.0050 | 0.0050 | mg/kg | | | | | | | |
| 1,2-Dichloropropane | <0.0050 | 0.0050 | mg/kg | | | | | | | |
| trans-1,3-Dichloropropylene | <0.0050 | 0.0050 | mg/kg | | | | | | | |
| 1,1-Dichloropropylene | <0.0050 | 0.0050 | mg/kg | | | | | | | |
| cis-1,3-Dichloropropylene | <0.0050 | 0.0050 | mg/kg | | | | | | | |
| Diisopropyl ether (DIPE) | <0.0050 | 0.0050 | mg/kg | | | | | | | |
| Ethylbenzene | <0.0020 | 0.0020 | mg/kg | | | | | | | |
| Ethyl-tert-Butyl Ether (ETBE) | <0.0050 | 0.0050 | mg/kg | | | | | | | |
| Gasoline Range Organics (GRO) | <0.50 | 0.50 | mg/kg | | | | | | | |
| Hexachlorobutadiene | <0.010 | 0.010 | mg/kg | | | | | | | |
| 2-Hexanone (MBK) | <0.050 | 0.050 | mg/kg | | | | | | | |
| Isopropylbenzene | <0.0050 | 0.0050 | mg/kg | | | | | | | |
| 4-Isopropyltoluene | <0.0050 | 0.0050 | mg/kg | | | | | | | |
| Methyl-tert-Butyl Ether (MTBE) | <0.0050 | 0.0050 | mg/kg | | | | | | | |
| Methylene Chloride | <0.050 | 0.050 | mg/kg | | | | | | | |
| 4-Methyl-2-pentanone (MIBK) | <0.050 | 0.050 | mg/kg | | | | | | | |
| Naphthalene | <0.010 | 0.010 | mg/kg | | | | | | | |

**Viorel Vasile**
Operations Manager

# LABORATORY ANALYSIS RESULTS

**Client:** Stantec (TO)
**Project No:** 2057123300
**Project Name:** Grayson Power Plant Glendale Phase II

**AA Project No:** A732174
**Date Received:** 04/27/16
**Date Reported:** 05/10/16

| Analyte | Result | Reporting Limit | Units | Spike Level | Source Result | %REC | %REC Limits | RPD | RPD Limit | Notes |
|---|---|---|---|---|---|---|---|---|---|---|
| **VOCs, OXY & TPHG by GC/MS EPA 5035 - Quality Control** | | | | | | | | | | |
| *Batch B6E0422 - EPA 5035* | | | | | | | | | | |
| **Blank (B6E0422-BLK1) Continued** | | | | Prepared & Analyzed: 05/04/16 | | | | | | |
| n-Propylbenzene | <0.0050 | 0.0050 | mg/kg | | | | | | | |
| Styrene | <0.0050 | 0.0050 | mg/kg | | | | | | | |
| 1,1,1,2-Tetrachloroethane | <0.0050 | 0.0050 | mg/kg | | | | | | | |
| 1,1,2,2-Tetrachloroethane | <0.0050 | 0.0050 | mg/kg | | | | | | | |
| Tetrachloroethylene (PCE) | <0.0050 | 0.0050 | mg/kg | | | | | | | |
| Toluene | <0.0020 | 0.0020 | mg/kg | | | | | | | |
| 1,2,4-Trichlorobenzene | <0.0050 | 0.0050 | mg/kg | | | | | | | |
| 1,2,3-Trichlorobenzene | <0.0050 | 0.0050 | mg/kg | | | | | | | |
| 1,1,2-Trichloroethane | <0.0050 | 0.0050 | mg/kg | | | | | | | |
| 1,1,1-Trichloroethane | <0.0050 | 0.0050 | mg/kg | | | | | | | |
| Trichloroethylene (TCE) | <0.0050 | 0.0050 | mg/kg | | | | | | | |
| Trichlorofluoromethane (R11) | <0.0050 | 0.0050 | mg/kg | | | | | | | |
| 1,2,3-Trichloropropane | <0.0050 | 0.0050 | mg/kg | | | | | | | |
| 1,1,2-Trichloro-1,2,2-trifluoroethane (R113) | <0.0050 | 0.0050 | mg/kg | | | | | | | |
| 1,3,5-Trimethylbenzene | <0.0050 | 0.0050 | mg/kg | | | | | | | |
| 1,2,4-Trimethylbenzene | <0.0050 | 0.0050 | mg/kg | | | | | | | |
| Vinyl chloride | <0.0050 | 0.0050 | mg/kg | | | | | | | |
| o-Xylene | <0.0020 | 0.0020 | mg/kg | | | | | | | |
| m,p-Xylenes | <0.0020 | 0.0020 | mg/kg | | | | | | | |
| *Surrogate: 4-Bromofluorobenzene* | *0.108* | | *mg/kg* | *0.10* | | *108* | *70-140* | | | |
| *Surrogate: Dibromofluoromethane* | *0.0962* | | *mg/kg* | *0.10* | | *96.2* | *70-140* | | | |
| *Surrogate: Toluene-d8* | *0.103* | | *mg/kg* | *0.10* | | *103* | *70-140* | | | |
| **LCS (B6E0422-BS1)** | | | | Prepared & Analyzed: 05/04/16 | | | | | | |
| Acetone | **0.0863** | 0.050 | mg/kg | 0.10 | | 86.3 | 70-130 | | | |
| tert-Amyl Methyl Ether (TAME) | **0.0354** | 0.0050 | mg/kg | 0.040 | | 88.4 | 70-130 | | | |
| Benzene | **0.0376** | 0.0020 | mg/kg | 0.040 | | 94.0 | 75-125 | | | |
| Bromobenzene | **0.0386** | 0.0050 | mg/kg | 0.040 | | 96.6 | 70-130 | | | |
| Bromochloromethane | **0.0387** | 0.0050 | mg/kg | 0.040 | | 96.6 | 70-130 | | | |
| Bromodichloromethane | **0.0352** | 0.0050 | mg/kg | 0.040 | | 88.1 | 75-125 | | | |
| Bromoform | **0.0318** | 0.0050 | mg/kg | 0.040 | | 79.5 | 75-125 | | | |

**Viorel Vasile**
Operations Manager

# LABORATORY ANALYSIS RESULTS

**Client:** Stantec (TO)
**Project No:** 2057123300
**Project Name:** Grayson Power Plant Glendale Phase II

**AA Project No:** A732174
**Date Received:** 04/27/16
**Date Reported:** 05/10/16

## VOCs, OXY & TPHG by GC/MS EPA 5035 - Quality Control

*Batch B6E0422 - EPA 5035*

**LCS (B6E0422-BS1) Continued** — Prepared & Analyzed: 05/04/16

| Analyte | Result | Reporting Limit | Units | Spike Level | Source Result | %REC | %REC Limits | RPD | RPD Limit | Notes |
|---|---|---|---|---|---|---|---|---|---|---|
| Bromomethane | **0.0490** | 0.0050 | mg/kg | 0.040 | | 122 | 75-125 | | | |
| 2-Butanone (MEK) | **0.0918** | 0.050 | mg/kg | 0.10 | | 91.8 | 70-130 | | | |
| tert-Butyl alcohol (TBA) | **0.184** | 0.020 | mg/kg | 0.20 | | 91.8 | 70-130 | | | |
| sec-Butylbenzene | **0.0425** | 0.0050 | mg/kg | 0.040 | | 106 | 70-130 | | | |
| tert-Butylbenzene | **0.0476** | 0.0050 | mg/kg | 0.040 | | 119 | 70-130 | | | |
| n-Butylbenzene | **0.0447** | 0.0050 | mg/kg | 0.040 | | 112 | 70-130 | | | |
| Carbon Disulfide | **0.107** | 0.0050 | mg/kg | 0.10 | | 107 | 70-130 | | | |
| Carbon Tetrachloride | **0.0382** | 0.0050 | mg/kg | 0.040 | | 95.5 | 75-125 | | | |
| Chlorobenzene | **0.0428** | 0.0050 | mg/kg | 0.040 | | 107 | 75-125 | | | |
| Chloroethane | **0.0391** | 0.0050 | mg/kg | 0.040 | | 97.8 | 75-125 | | | |
| Chloroform | **0.0375** | 0.0050 | mg/kg | 0.040 | | 93.8 | 75-125 | | | |
| Chloromethane | **0.0355** | 0.0050 | mg/kg | 0.040 | | 88.8 | 65-125 | | | |
| 2-Chlorotoluene | **0.0415** | 0.0050 | mg/kg | 0.040 | | 104 | 70-130 | | | |
| 4-Chlorotoluene | **0.0420** | 0.0050 | mg/kg | 0.040 | | 105 | 70-130 | | | |
| 1,2-Dibromo-3-chloropropane | **0.0322** | 0.010 | mg/kg | 0.040 | | 80.5 | 70-130 | | | |
| Dibromochloromethane | **0.0377** | 0.0050 | mg/kg | 0.040 | | 94.2 | 75-125 | | | |
| 1,2-Dibromoethane (EDB) | **0.0376** | 0.0050 | mg/kg | 0.040 | | 93.9 | 70-130 | | | |
| Dibromomethane | **0.0342** | 0.0050 | mg/kg | 0.040 | | 85.4 | 70-130 | | | |
| 1,4-Dichlorobenzene | **0.0399** | 0.0050 | mg/kg | 0.040 | | 99.8 | 75-125 | | | |
| 1,3-Dichlorobenzene | **0.0394** | 0.0050 | mg/kg | 0.040 | | 98.4 | 70-130 | | | |
| 1,2-Dichlorobenzene | **0.0395** | 0.0050 | mg/kg | 0.040 | | 98.8 | 70-130 | | | |
| Dichlorodifluoromethane (R12) | **0.0492** | 0.0050 | mg/kg | 0.040 | | 123 | 70-130 | | | |
| 1,1-Dichloroethane | **0.0431** | 0.0050 | mg/kg | 0.040 | | 108 | 70-125 | | | |
| 1,2-Dichloroethane (EDC) | **0.0350** | 0.0050 | mg/kg | 0.040 | | 87.6 | 75-125 | | | |
| trans-1,2-Dichloroethylene | **0.0426** | 0.0050 | mg/kg | 0.040 | | 107 | 75-125 | | | |
| cis-1,2-Dichloroethylene | **0.0393** | 0.0050 | mg/kg | 0.040 | | 98.2 | 75-125 | | | |
| 1,1-Dichloroethylene | **0.0451** | 0.0050 | mg/kg | 0.040 | | 113 | 70-130 | | | |
| 2,2-Dichloropropane | **0.0381** | 0.0050 | mg/kg | 0.040 | | 95.4 | 70-130 | | | |
| 1,3-Dichloropropane | **0.0409** | 0.0050 | mg/kg | 0.040 | | 102 | 70-130 | | | |
| 1,2-Dichloropropane | **0.0363** | 0.0050 | mg/kg | 0.040 | | 90.7 | 75-130 | | | |
| trans-1,3-Dichloropropylene | **0.0366** | 0.0050 | mg/kg | 0.040 | | 91.4 | 70-130 | | | |

**Viorel Vasile**
Operations Manager

# LABORATORY ANALYSIS RESULTS

**Client:** Stantec (TO)
**Project No:** 2057123300
**Project Name:** Grayson Power Plant Glendale Phase II

**AA Project No:** A732174
**Date Received:** 04/27/16
**Date Reported:** 05/10/16

## VOCs, OXY & TPHG by GC/MS EPA 5035 - Quality Control

*Batch B6E0422 - EPA 5035*

**LCS (B6E0422-BS1) Continued** — Prepared & Analyzed: 05/04/16

| Analyte | Result | Reporting Limit | Units | Spike Level | Source Result | %REC | %REC Limits | RPD | RPD Limit | Notes |
|---|---|---|---|---|---|---|---|---|---|---|
| 1,1-Dichloropropylene | **0.0358** | 0.0050 | mg/kg | 0.040 | | 89.6 | 70-130 | | | |
| cis-1,3-Dichloropropylene | **0.0352** | 0.0050 | mg/kg | 0.040 | | 88.0 | 75-125 | | | |
| Diisopropyl ether (DIPE) | **0.0439** | 0.0050 | mg/kg | 0.040 | | 110 | 70-130 | | | |
| Ethylbenzene | **0.0418** | 0.0020 | mg/kg | 0.040 | | 105 | 75-125 | | | |
| Ethyl-tert-Butyl Ether (ETBE) | **0.0403** | 0.0050 | mg/kg | 0.040 | | 101 | 70-130 | | | |
| Gasoline Range Organics (GRO) | **0.908** | 0.50 | mg/kg | 1.0 | | 90.8 | 70-130 | | | |
| Hexachlorobutadiene | **0.0391** | 0.010 | mg/kg | 0.040 | | 97.8 | 70-130 | | | |
| 2-Hexanone (MBK) | **0.0855** | 0.050 | mg/kg | 0.10 | | 85.5 | 70-130 | | | |
| Isopropylbenzene | **0.0429** | 0.0050 | mg/kg | 0.040 | | 107 | 70-130 | | | |
| 4-Isopropyltoluene | **0.0437** | 0.0050 | mg/kg | 0.040 | | 109 | 70-130 | | | |
| Methyl-tert-Butyl Ether (MTBE) | **0.0695** | 0.0050 | mg/kg | 0.080 | | 86.8 | 75-125 | | | |
| Methylene Chloride | **0.0551** | 0.050 | mg/kg | 0.040 | | 138 | 75-130 | | | **a |
| 4-Methyl-2-pentanone (MIBK) | **0.0916** | 0.050 | mg/kg | 0.10 | | 91.6 | 70-130 | | | |
| Naphthalene | **0.0341** | 0.010 | mg/kg | 0.040 | | 85.2 | 70-130 | | | |
| n-Propylbenzene | **0.0409** | 0.0050 | mg/kg | 0.040 | | 102 | 70-130 | | | |
| Styrene | **0.0430** | 0.0050 | mg/kg | 0.040 | | 108 | 70-130 | | | |
| 1,1,1,2-Tetrachloroethane | **0.0415** | 0.0050 | mg/kg | 0.040 | | 104 | 70-130 | | | |
| 1,1,2,2-Tetrachloroethane | **0.0381** | 0.0050 | mg/kg | 0.040 | | 95.2 | 70-135 | | | |
| Tetrachloroethylene (PCE) | **0.0393** | 0.0050 | mg/kg | 0.040 | | 98.2 | 75-125 | | | |
| Toluene | **0.0418** | 0.0020 | mg/kg | 0.040 | | 104 | 75-125 | | | |
| 1,2,4-Trichlorobenzene | **0.0405** | 0.0050 | mg/kg | 0.040 | | 101 | 70-130 | | | |
| 1,2,3-Trichlorobenzene | **0.0386** | 0.0050 | mg/kg | 0.040 | | 96.5 | 70-130 | | | |
| 1,1,2-Trichloroethane | **0.0404** | 0.0050 | mg/kg | 0.040 | | 101 | 75-125 | | | |
| 1,1,1-Trichloroethane | **0.0376** | 0.0050 | mg/kg | 0.040 | | 93.9 | 75-125 | | | |
| Trichloroethylene (TCE) | **0.0368** | 0.0050 | mg/kg | 0.040 | | 92.0 | 75-125 | | | |
| Trichlorofluoromethane (R11) | **0.0403** | 0.0050 | mg/kg | 0.040 | | 101 | 70-130 | | | |
| 1,2,3-Trichloropropane | **0.0378** | 0.0050 | mg/kg | 0.040 | | 94.5 | 70-130 | | | |
| 1,1,2-Trichloro-1,2,2-trifluoroethane (R113) | **0.0919** | 0.0050 | mg/kg | 0.080 | | 115 | 70-130 | | | |
| 1,3,5-Trimethylbenzene | **0.0444** | 0.0050 | mg/kg | 0.040 | | 111 | 70-130 | | | |
| 1,2,4-Trimethylbenzene | **0.0443** | 0.0050 | mg/kg | 0.040 | | 111 | 70-130 | | | |
| Vinyl chloride | **0.0468** | 0.0050 | mg/kg | 0.040 | | 117 | 75-125 | | | |

**Viorel Vasile**
Operations Manager

# LABORATORY ANALYSIS RESULTS

**Client:** Stantec (TO)
**Project No:** 2057123300
**Project Name:** Grayson Power Plant Glendale Phase II

**AA Project No:** A732174
**Date Received:** 04/27/16
**Date Reported:** 05/10/16

| Analyte | Result | Reporting Limit | Units | Spike Level | Source Result | %REC | %REC Limits | RPD | RPD Limit | Notes |
|---|---|---|---|---|---|---|---|---|---|---|
| **VOCs, OXY & TPHG by GC/MS EPA 5035 - Quality Control** | | | | | | | | | | |
| *Batch B6E0422 - EPA 5035* | | | | | | | | | | |
| **LCS (B6E0422-BS1) Continued** | | | | Prepared & Analyzed: 05/04/16 | | | | | | |
| o-Xylene | **0.0433** | 0.0020 | mg/kg | 0.040 | | 108 | 75-125 | | | |
| m,p-Xylenes | **0.0761** | 0.0020 | mg/kg | 0.080 | | 95.1 | 70-130 | | | |
| *Surrogate: 4-Bromofluorobenzene* | *0.0980* | | *mg/kg* | *0.10* | | *98.0* | *70-140* | | | |
| *Surrogate: Dibromofluoromethane* | *0.0910* | | *mg/kg* | *0.10* | | *91.0* | *70-140* | | | |
| *Surrogate: Toluene-d8* | *0.102* | | *mg/kg* | *0.10* | | *102* | *70-140* | | | |
| **Carbon Chain by GC/FID - Quality Control** | | | | | | | | | | |
| *Batch B6D2836 - EPA 3510C* | | | | | | | | | | |
| **Blank (B6D2836-BLK1)** | | | | Prepared & Analyzed: 04/28/16 | | | | | | |
| C6-C8 | <0.010 | 0.010 | mg/L | | | | | | | |
| C8-C10 | <0.010 | 0.010 | mg/L | | | | | | | |
| C10-C12 | <0.010 | 0.010 | mg/L | | | | | | | |
| C12-C14 | <0.010 | 0.010 | mg/L | | | | | | | |
| C14-C16 | <0.010 | 0.010 | mg/L | | | | | | | |
| C16-C18 | <0.010 | 0.010 | mg/L | | | | | | | |
| C18-C20 | <0.010 | 0.010 | mg/L | | | | | | | |
| C20-C22 | <0.010 | 0.010 | mg/L | | | | | | | |
| C22-C24 | <0.010 | 0.010 | mg/L | | | | | | | |
| C24-C26 | <0.010 | 0.010 | mg/L | | | | | | | |
| C26-C28 | <0.010 | 0.010 | mg/L | | | | | | | |
| C28-C32 | <0.010 | 0.010 | mg/L | | | | | | | |
| C32-C34 | <0.010 | 0.010 | mg/L | | | | | | | |
| C34-C36 | <0.010 | 0.010 | mg/L | | | | | | | |
| C36-C40 | <0.010 | 0.010 | mg/L | | | | | | | |
| C40-C44 | <0.010 | 0.010 | mg/L | | | | | | | |
| TPH (C6-C44) | <0.10 | 0.10 | mg/L | | | | | | | |
| *Surrogate: o-Terphenyl* | *0.0468* | | *mg/L* | *0.040* | | *117* | *50-150* | | | |
| **LCS (B6D2836-BS1)** | | | | Prepared & Analyzed: 04/28/16 | | | | | | |
| Diesel Range Organics as Diesel | **0.699** | 0.10 | mg/L | 0.80 | | 87.4 | 75-125 | | | |
| *Surrogate: o-Terphenyl* | *0.0507* | | *mg/L* | *0.040* | | *127* | *50-150* | | | |
| **LCS Dup (B6D2836-BSD1)** | | | | Prepared & Analyzed: 04/28/16 | | | | | | |

**Viorel Vasile**
Operations Manager

# LABORATORY ANALYSIS RESULTS

**Client:** Stantec (TO)
**Project No:** 2057123300
**Project Name:** Grayson Power Plant Glendale Phase II

**AA Project No:** A732174
**Date Received:** 04/27/16
**Date Reported:** 05/10/16

| Analyte | Result | Reporting Limit | Units | Spike Level | Source Result | %REC | %REC Limits | RPD | RPD Limit | Notes |
|---|---|---|---|---|---|---|---|---|---|---|
| **Carbon Chain by GC/FID - Quality Control** | | | | | | | | | | |
| *Batch B6D2836 - EPA 3510C* | | | | | | | | | | |
| **LCS Dup (B6D2836-BSD1) Continued** | | | | Prepared & Analyzed: 04/28/16 | | | | | | |
| Diesel Range Organics as Diesel | **0.671** | 0.10 | mg/L | 0.80 | | 83.8 | 75-125 | 4.20 | 30 | |
| *Surrogate: o-Terphenyl* | *0.0531* | | *mg/L* | *0.040* | | *133* | *50-150* | | | |
| *Batch B6D2848 - EPA 3550B* | | | | | | | | | | |
| **Blank (B6D2848-BLK1)** | | | | Prepared: 04/28/16 Analyzed: 04/29/16 | | | | | | |
| C6-C8 | <1.0 | 1.0 | mg/kg | | | | | | | |
| C8-C10 | <1.0 | 1.0 | mg/kg | | | | | | | |
| C10-C12 | <1.0 | 1.0 | mg/kg | | | | | | | |
| C12-C14 | <1.0 | 1.0 | mg/kg | | | | | | | |
| C14-C16 | <1.0 | 1.0 | mg/kg | | | | | | | |
| C16-C18 | <1.0 | 1.0 | mg/kg | | | | | | | |
| C18-C20 | <1.0 | 1.0 | mg/kg | | | | | | | |
| C20-C22 | <1.0 | 1.0 | mg/kg | | | | | | | |
| C22-C24 | <1.0 | 1.0 | mg/kg | | | | | | | |
| C24-C26 | <1.0 | 1.0 | mg/kg | | | | | | | |
| C26-C28 | <1.0 | 1.0 | mg/kg | | | | | | | |
| C28-C32 | <1.0 | 1.0 | mg/kg | | | | | | | |
| C32-C34 | <1.0 | 1.0 | mg/kg | | | | | | | |
| C34-C36 | <1.0 | 1.0 | mg/kg | | | | | | | |
| C36-C40 | <1.0 | 1.0 | mg/kg | | | | | | | |
| C40-C44 | <1.0 | 1.0 | mg/kg | | | | | | | |
| TPH (C6-C44) | <10 | 10 | mg/kg | | | | | | | |
| *Surrogate: o-Terphenyl* | *11.0* | | *mg/kg* | *10* | | *110* | *50-150* | | | |
| **LCS (B6D2848-BS1)** | | | | Prepared: 04/28/16 Analyzed: 04/29/16 | | | | | | |
| Diesel Range Organics as Diesel | **201** | 10 | mg/kg | 200 | | 100 | 75-125 | | | |
| *Surrogate: o-Terphenyl* | *12.8* | | *mg/kg* | *10* | | *128* | *50-150* | | | |
| **LCS Dup (B6D2848-BSD1)** | | | | Prepared: 04/28/16 Analyzed: 04/29/16 | | | | | | |
| Diesel Range Organics as Diesel | **192** | 10 | mg/kg | 200 | | 95.8 | 75-125 | 4.69 | 40 | |
| *Surrogate: o-Terphenyl* | *12.2* | | *mg/kg* | *10* | | *122* | *50-150* | | | |
| **Matrix Spike (B6D2848-MS1)** | | | **Source: 6D26016-05** | Prepared: 04/28/16 Analyzed: 04/29/16 | | | | | | |

**Viorel Vasile**
Operations Manager

# LABORATORY ANALYSIS RESULTS

**Client:** Stantec (TO)
**Project No:** 2057123300
**Project Name:** Grayson Power Plant Glendale Phase II

**AA Project No:** A732174
**Date Received:** 04/27/16
**Date Reported:** 05/10/16

| Analyte | Result | Reporting Limit | Units | Spike Level | Source Result | %REC | %REC Limits | RPD | RPD Limit | Notes |
|---|---|---|---|---|---|---|---|---|---|---|
| **Carbon Chain by GC/FID - Quality Control** | | | | | | | | | | |
| *Batch B6D2848 - EPA 3550B* | | | | | | | | | | |
| **Matrix Spike (B6D2848-MS1) Continued Source: 6D26016-05** Prepared: 04/28/16 Analyzed: 04/29/16 | | | | | | | | | | |
| Diesel Range Organics as Diesel | **200** | 10 | mg/kg | 200 | | 99.8 | 70-130 | | | |
| *Surrogate: o-Terphenyl* | *11.6* | | *mg/kg* | *10* | | *116* | *50-150* | | | |
| **Matrix Spike Dup (B6D2848-MSD1) Source: 6D26016-05** Prepared: 04/28/16 Analyzed: 04/29/16 | | | | | | | | | | |
| Diesel Range Organics as Diesel | **187** | 10 | mg/kg | 200 | | 93.6 | 70-130 | 6.42 | 40 | |
| *Surrogate: o-Terphenyl* | *11.7* | | *mg/kg* | *10* | | *117* | *50-150* | | | |
| **Total Metals CAM 17 - Quality Control** | | | | | | | | | | |
| *Batch B6E0220 - EPA 3050B* | | | | | | | | | | |
| **Blank (B6E0220-BLK1)** Prepared: 05/02/16 Analyzed: 05/03/16 | | | | | | | | | | |
| Antimony | <10 | 10 | mg/kg | | | | | | | |
| Arsenic | <0.50 | 0.50 | mg/kg | | | | | | | |
| Barium | <10 | 10 | mg/kg | | | | | | | |
| Beryllium | <1.0 | 1.0 | mg/kg | | | | | | | |
| Cadmium | <1.0 | 1.0 | mg/kg | | | | | | | |
| Chromium | <3.0 | 3.0 | mg/kg | | | | | | | |
| Cobalt | <3.0 | 3.0 | mg/kg | | | | | | | |
| Copper | <3.0 | 3.0 | mg/kg | | | | | | | |
| Lead | <3.0 | 3.0 | mg/kg | | | | | | | |
| Molybdenum | <5.0 | 5.0 | mg/kg | | | | | | | |
| Nickel | <3.0 | 3.0 | mg/kg | | | | | | | |
| Selenium | <0.50 | 0.50 | mg/kg | | | | | | | |
| Silver | <1.0 | 1.0 | mg/kg | | | | | | | |
| Thallium | <5.0 | 5.0 | mg/kg | | | | | | | |
| Vanadium | <10 | 10 | mg/kg | | | | | | | |
| Zinc | <3.0 | 3.0 | mg/kg | | | | | | | |
| **LCS (B6E0220-BS1)** Prepared: 05/02/16 Analyzed: 05/03/16 | | | | | | | | | | |
| Antimony | **48.9** | 10 | mg/kg | 50 | | 97.9 | 80-120 | | | |
| Arsenic | **48.8** | 0.50 | mg/kg | 50 | | 97.6 | 80-120 | | | |
| Barium | **52.1** | 10 | mg/kg | 50 | | 104 | 80-120 | | | |
| Beryllium | **50.6** | 1.0 | mg/kg | 50 | | 101 | 80-120 | | | |
| Cadmium | **50.9** | 1.0 | mg/kg | 50 | | 102 | 80-120 | | | |

**Viorel Vasile**
Operations Manager

# LABORATORY ANALYSIS RESULTS

**Client:** Stantec (TO)
**Project No:** 2057123300
**Project Name:** Grayson Power Plant Glendale Phase II

**AA Project No:** A732174
**Date Received:** 04/27/16
**Date Reported:** 05/10/16

| Analyte | Result | Reporting Limit | Units | Spike Level | Source Result | %REC | %REC Limits | RPD | RPD Limit | Notes |
|---|---|---|---|---|---|---|---|---|---|---|
| **Total Metals CAM 17 - Quality Control** | | | | | | | | | | |
| *Batch B6E0220 - EPA 3050B* | | | | | | | | | | |
| **LCS (B6E0220-BS1) Continued** | | | | Prepared: 05/02/16 Analyzed: 05/03/16 | | | | | | |
| Chromium | **50.6** | 3.0 | mg/kg | 50 | | 101 | 80-120 | | | |
| Cobalt | **50.8** | 3.0 | mg/kg | 50 | | 102 | 80-120 | | | |
| Copper | **50.6** | 3.0 | mg/kg | 50 | | 101 | 80-120 | | | |
| Lead | **50.2** | 3.0 | mg/kg | 50 | | 100 | 80-120 | | | |
| Molybdenum | **50.2** | 5.0 | mg/kg | 50 | | 100 | 80-120 | | | |
| Nickel | **51.0** | 3.0 | mg/kg | 50 | | 102 | 80-120 | | | |
| Selenium | **51.4** | 0.50 | mg/kg | 50 | | 103 | 80-120 | | | |
| Silver | **50.6** | 1.0 | mg/kg | 50 | | 101 | 80-120 | | | |
| Thallium | **47.0** | 5.0 | mg/kg | 50 | | 94.0 | 80-120 | | | |
| Vanadium | **50.0** | 10 | mg/kg | 50 | | 100 | 80-120 | | | |
| Zinc | **51.3** | 3.0 | mg/kg | 50 | | 103 | 80-120 | | | |
| **LCS Dup (B6E0220-BSD1)** | | | | Prepared: 05/02/16 Analyzed: 05/03/16 | | | | | | |
| Antimony | **49.5** | 10 | mg/kg | 50 | | 99.1 | 80-120 | 1.24 | 20 | |
| Arsenic | **49.7** | 0.50 | mg/kg | 50 | | 99.4 | 80-120 | 1.83 | 20 | |
| Barium | **51.8** | 10 | mg/kg | 50 | | 104 | 80-120 | 0.674 | 20 | |
| Beryllium | **50.7** | 1.0 | mg/kg | 50 | | 101 | 80-120 | 0.296 | 20 | |
| Cadmium | **50.8** | 1.0 | mg/kg | 50 | | 102 | 80-120 | 0.197 | 20 | |
| Chromium | **50.6** | 3.0 | mg/kg | 50 | | 101 | 80-120 | 0.00 | 20 | |
| Cobalt | **50.6** | 3.0 | mg/kg | 50 | | 101 | 80-120 | 0.493 | 20 | |
| Copper | **50.8** | 3.0 | mg/kg | 50 | | 102 | 80-120 | 0.197 | 20 | |
| Lead | **51.1** | 3.0 | mg/kg | 50 | | 102 | 80-120 | 1.88 | 20 | |
| Molybdenum | **50.4** | 5.0 | mg/kg | 50 | | 101 | 80-120 | 0.497 | 20 | |
| Nickel | **50.5** | 3.0 | mg/kg | 50 | | 101 | 80-120 | 0.887 | 20 | |
| Selenium | **51.2** | 0.50 | mg/kg | 50 | | 102 | 80-120 | 0.390 | 20 | |
| Silver | **50.2** | 1.0 | mg/kg | 50 | | 100 | 80-120 | 0.793 | 20 | |
| Thallium | **49.0** | 5.0 | mg/kg | 50 | | 97.9 | 80-120 | 4.08 | 20 | |
| Vanadium | **49.7** | 10 | mg/kg | 50 | | 99.5 | 80-120 | 0.541 | 20 | |
| Zinc | **51.2** | 3.0 | mg/kg | 50 | | 102 | 80-120 | 0.0975 | 20 | |
| **Duplicate (B6E0220-DUP1)** | | **Source: 6D27022-13** | | Prepared: 05/02/16 Analyzed: 05/03/16 | | | | | | |
| Antimony | **<10** | 10 | mg/kg | | <10 | | | | 40 | |
| Arsenic | **2.80** | 0.50 | mg/kg | | 2.50 | | | 11.1 | 40 | |

**Viorel Vasile**
Operations Manager

# LABORATORY ANALYSIS RESULTS

**Client:** Stantec (TO)
**Project No:** 2057123300
**Project Name:** Grayson Power Plant Glendale Phase II

**AA Project No:** A732174
**Date Received:** 04/27/16
**Date Reported:** 05/10/16

| Analyte | Result | Reporting Limit | Units | Spike Level | Source Result | %REC | %REC Limits | RPD | RPD Limit | Notes |
|---|---|---|---|---|---|---|---|---|---|---|
| **Total Metals CAM 17 - Quality Control** | | | | | | | | | | |
| *Batch B6E0220 - EPA 3050B* | | | | | | | | | | |
| **Duplicate (B6E0220-DUP1) Continued** | | **Source: 6D27022-13** Prepared: 05/02/16 Analyzed: 05/03/16 | | | | | | | | |
| Barium | **117** | 10 | mg/kg | | 137 | | | 15.9 | 40 | |
| Beryllium | **<1.0** | 1.0 | mg/kg | | <1.0 | | | | 40 | |
| Cadmium | **<1.0** | 1.0 | mg/kg | | <1.0 | | | | 40 | |
| Chromium | **28.1** | 3.0 | mg/kg | | 29.9 | | | 6.08 | 40 | |
| Cobalt | **8.59** | 3.0 | mg/kg | | 10.7 | | | 21.6 | 40 | |
| Copper | **24.7** | 3.0 | mg/kg | | 28.9 | | | 15.5 | 40 | |
| Lead | **32.2** | 3.0 | mg/kg | | 49.0 | | | 41.5 | 40 | |
| Molybdenum | **<5.0** | 5.0 | mg/kg | | <5.0 | | | | 40 | |
| Nickel | **11.3** | 3.0 | mg/kg | | 12.8 | | | 12.7 | 40 | |
| Selenium | **<0.50** | 0.50 | mg/kg | | <0.50 | | | | 40 | |
| Silver | **<1.0** | 1.0 | mg/kg | | <1.0 | | | | 40 | |
| Thallium | **<5.0** | 5.0 | mg/kg | | <5.0 | | | | 40 | |
| Vanadium | **43.3** | 10 | mg/kg | | 52.6 | | | 19.3 | 40 | |
| Zinc | **124** | 3.0 | mg/kg | | 167 | | | 29.2 | 40 | |
| **Matrix Spike (B6E0220-MS1)** | | **Source: 6D29007-01** Prepared: 05/02/16 Analyzed: 05/03/16 | | | | | | | | |
| Antimony | **15.0** | 10 | mg/kg | 50 | | 30.0 | 75-125 | | | QM-07 |
| Arsenic | **50.8** | 0.50 | mg/kg | 50 | 3.65 | 94.3 | 75-125 | | | |
| Barium | **183** | 10 | mg/kg | 50 | 144 | 78.8 | 75-125 | | | |
| Beryllium | **49.5** | 1.0 | mg/kg | 50 | | 99.0 | 75-125 | | | |
| Cadmium | **49.4** | 1.0 | mg/kg | 50 | | 98.8 | 75-125 | | | |
| Chromium | **62.9** | 3.0 | mg/kg | 50 | 16.4 | 93.1 | 75-125 | | | |
| Cobalt | **59.6** | 3.0 | mg/kg | 50 | 12.6 | 93.9 | 75-125 | | | |
| Copper | **62.6** | 3.0 | mg/kg | 50 | 18.5 | 88.2 | 75-125 | | | |
| Lead | **55.7** | 3.0 | mg/kg | 50 | 7.10 | 97.2 | 75-125 | | | |
| Molybdenum | **47.8** | 5.0 | mg/kg | 50 | | 95.5 | 75-125 | | | |
| Nickel | **57.8** | 3.0 | mg/kg | 50 | 11.6 | 92.4 | 75-125 | | | |
| Selenium | **46.7** | 0.50 | mg/kg | 50 | | 93.5 | 75-125 | | | |
| Silver | **47.0** | 1.0 | mg/kg | 50 | | 94.1 | 75-125 | | | |
| Thallium | **37.9** | 5.0 | mg/kg | 50 | | 75.8 | 60-140 | | | |
| Vanadium | **99.5** | 10 | mg/kg | 50 | 58.4 | 82.3 | 75-125 | | | |
| Zinc | **130** | 3.0 | mg/kg | 50 | 90.6 | 79.2 | 75-125 | | | |

**Viorel Vasile**
Operations Manager

# LABORATORY ANALYSIS RESULTS

**Client:** Stantec (TO)
**Project No:** 2057123300
**Project Name:** Grayson Power Plant Glendale Phase II

**AA Project No:** A732174
**Date Received:** 04/27/16
**Date Reported:** 05/10/16

| Analyte | Result | Reporting Limit | Units | Spike Level | Source Result | %REC | %REC Limits | RPD | RPD Limit | Notes |
|---|---|---|---|---|---|---|---|---|---|---|
| **Total Metals CAM 17 - Quality Control** | | | | | | | | | | |
| *Batch B6E0220 - EPA 3050B* | | | | | | | | | | |
| **Matrix Spike Dup (B6E0220-MSD1)** | | | **Source: 6D29007-01** Prepared: 05/02/16 Analyzed: 05/03/16 | | | | | | | |
| Antimony | **14.9** | 10 | mg/kg | 50 | | 29.7 | 75-125 | 0.871 | 40 | QM-07 |
| Arsenic | **52.0** | 0.50 | mg/kg | 50 | 3.65 | 96.8 | 75-125 | 2.43 | 40 | |
| Barium | **184** | 10 | mg/kg | 50 | 144 | 80.3 | 75-125 | 0.409 | 40 | |
| Beryllium | **50.0** | 1.0 | mg/kg | 50 | | 100 | 75-125 | 1.16 | 40 | |
| Cadmium | **49.8** | 1.0 | mg/kg | 50 | | 99.5 | 75-125 | 0.696 | 40 | |
| Chromium | **63.9** | 3.0 | mg/kg | 50 | 16.4 | 95.1 | 75-125 | 1.58 | 40 | |
| Cobalt | **60.4** | 3.0 | mg/kg | 50 | 12.6 | 95.5 | 75-125 | 1.33 | 40 | |
| Copper | **63.8** | 3.0 | mg/kg | 50 | 18.5 | 90.8 | 75-125 | 2.06 | 40 | |
| Lead | **57.2** | 3.0 | mg/kg | 50 | 7.10 | 100 | 75-125 | 2.57 | 40 | |
| Molybdenum | **49.0** | 5.0 | mg/kg | 50 | | 98.0 | 75-125 | 2.51 | 40 | |
| Nickel | **57.6** | 3.0 | mg/kg | 50 | 11.6 | 92.1 | 75-125 | 0.260 | 40 | |
| Selenium | **48.0** | 0.50 | mg/kg | 50 | | 96.0 | 75-125 | 2.66 | 40 | |
| Silver | **47.6** | 1.0 | mg/kg | 50 | | 95.3 | 75-125 | 1.24 | 40 | |
| Thallium | **39.0** | 5.0 | mg/kg | 50 | | 78.0 | 60-140 | 2.87 | 40 | |
| Vanadium | **103** | 10 | mg/kg | 50 | 58.4 | 90.1 | 75-125 | 3.84 | 40 | |
| Zinc | **136** | 3.0 | mg/kg | 50 | 90.6 | 90.4 | 75-125 | 4.21 | 40 | |
| *Batch B6E0323 - EPA 3010A* | | | | | | | | | | |
| **Blank (B6E0323-BLK1)** | | | | Prepared: 05/03/16 Analyzed: 05/04/16 | | | | | | |
| Antimony | <0.20 | 0.20 | mg/L | | | | | | | |
| Arsenic | <0.0070 | 0.0070 | mg/L | | | | | | | |
| Barium | <0.20 | 0.20 | mg/L | | | | | | | |
| Beryllium | <0.020 | 0.020 | mg/L | | | | | | | |
| Cadmium | <0.020 | 0.020 | mg/L | | | | | | | |
| Chromium | <0.050 | 0.050 | mg/L | | | | | | | |
| Cobalt | <0.050 | 0.050 | mg/L | | | | | | | |
| Copper | <0.050 | 0.050 | mg/L | | | | | | | |
| Lead | <0.0050 | 0.0050 | mg/L | | | | | | | |
| Molybdenum | <0.050 | 0.050 | mg/L | | | | | | | |
| Nickel | <0.050 | 0.050 | mg/L | | | | | | | |
| Selenium | <0.0050 | 0.0050 | mg/L | | | | | | | |
| Silver | <0.020 | 0.020 | mg/L | | | | | | | |

**Viorel Vasile**
Operations Manager

# LABORATORY ANALYSIS RESULTS

**Client:** Stantec (TO)
**Project No:** 2057123300
**Project Name:** Grayson Power Plant Glendale Phase II

**AA Project No:** A732174
**Date Received:** 04/27/16
**Date Reported:** 05/10/16

| Analyte | Result | Reporting Limit | Units | Spike Level | Source Result | %REC | %REC Limits | RPD | RPD Limit | Notes |
|---|---|---|---|---|---|---|---|---|---|---|
| **Total Metals CAM 17 - Quality Control** | | | | | | | | | | |
| *Batch B6E0323 - EPA 3010A* | | | | | | | | | | |
| **Blank (B6E0323-BLK1) Continued** | | | | Prepared: 05/03/16 Analyzed: 05/04/16 | | | | | | |
| Thallium | <0.10 | 0.10 | mg/L | | | | | | | |
| Vanadium | <0.20 | 0.20 | mg/L | | | | | | | |
| Zinc | <0.050 | 0.050 | mg/L | | | | | | | |
| **LCS (B6E0323-BS1)** | | | | Prepared: 05/03/16 Analyzed: 05/04/16 | | | | | | |
| Antimony | **0.180** | 0.20 | mg/L | 0.20 | | 90.1 | 80-120 | | | |
| Arsenic | **0.190** | 0.0070 | mg/L | 0.20 | | 95.0 | 80-120 | | | |
| Barium | **0.179** | 0.20 | mg/L | 0.20 | | 89.4 | 80-120 | | | |
| Beryllium | **0.203** | 0.020 | mg/L | 0.20 | | 102 | 80-120 | | | |
| Cadmium | **0.203** | 0.020 | mg/L | 0.20 | | 101 | 80-120 | | | |
| Chromium | **0.194** | 0.050 | mg/L | 0.20 | | 97.2 | 80-120 | | | |
| Cobalt | **0.195** | 0.050 | mg/L | 0.20 | | 97.4 | 80-120 | | | |
| Copper | **0.175** | 0.050 | mg/L | 0.20 | | 87.6 | 80-120 | | | |
| Lead | **0.196** | 0.0050 | mg/L | 0.20 | | 97.9 | 80-120 | | | |
| Molybdenum | **0.190** | 0.050 | mg/L | 0.20 | | 95.0 | 80-120 | | | |
| Nickel | **0.195** | 0.050 | mg/L | 0.20 | | 97.7 | 80-120 | | | |
| Selenium | **0.190** | 0.0050 | mg/L | 0.20 | | 94.8 | 80-120 | | | |
| Silver | **0.174** | 0.020 | mg/L | 0.20 | | 87.2 | 80-120 | | | |
| Thallium | **0.196** | 0.10 | mg/L | 0.20 | | 97.8 | 80-120 | | | |
| Vanadium | **0.186** | 0.20 | mg/L | 0.20 | | 93.2 | 80-120 | | | |
| Zinc | **0.211** | 0.050 | mg/L | 0.20 | | 106 | 80-120 | | | |
| **LCS Dup (B6E0323-BSD1)** | | | | Prepared: 05/03/16 Analyzed: 05/04/16 | | | | | | |
| Antimony | **0.182** | 0.20 | mg/L | 0.20 | | 91.0 | 80-120 | 1.05 | 20 | |
| Arsenic | **0.186** | 0.0070 | mg/L | 0.20 | | 93.0 | 80-120 | 2.02 | 20 | |
| Barium | **0.172** | 0.20 | mg/L | 0.20 | | 86.1 | 80-120 | 3.76 | 20 | |
| Beryllium | **0.206** | 0.020 | mg/L | 0.20 | | 103 | 80-120 | 1.27 | 20 | |
| Cadmium | **0.204** | 0.020 | mg/L | 0.20 | | 102 | 80-120 | 0.492 | 20 | |
| Chromium | **0.194** | 0.050 | mg/L | 0.20 | | 97.0 | 80-120 | 0.258 | 20 | |
| Cobalt | **0.194** | 0.050 | mg/L | 0.20 | | 96.8 | 80-120 | 0.618 | 20 | |
| Copper | **0.177** | 0.050 | mg/L | 0.20 | | 88.4 | 80-120 | 0.852 | 20 | |
| Lead | **0.194** | 0.0050 | mg/L | 0.20 | | 96.8 | 80-120 | 1.08 | 20 | |
| Molybdenum | **0.190** | 0.050 | mg/L | 0.20 | | 95.1 | 80-120 | 0.0526 | 20 | |

**Viorel Vasile**
Operations Manager

# LABORATORY ANALYSIS RESULTS

**Client:** Stantec (TO)
**Project No:** 2057123300
**Project Name:** Grayson Power Plant Glendale Phase II

**AA Project No:** A732174
**Date Received:** 04/27/16
**Date Reported:** 05/10/16

| Analyte | Result | Reporting Limit | Units | Spike Level | Source Result | %REC | %REC Limits | RPD | RPD Limit | Notes |
|---|---|---|---|---|---|---|---|---|---|---|
| **Total Metals CAM 17 - Quality Control** | | | | | | | | | | |
| *Batch B6E0323 - EPA 3010A* | | | | | | | | | | |
| **LCS Dup (B6E0323-BSD1) Continued** | | | | Prepared: 05/03/16 | | Analyzed: 05/04/16 | | | | |
| Nickel | **0.195** | 0.050 | mg/L | 0.20 | | 97.6 | 80-120 | 0.0512 | 20 | |
| Selenium | **0.196** | 0.0050 | mg/L | 0.20 | | 98.0 | 80-120 | 3.27 | 20 | |
| Silver | **0.176** | 0.020 | mg/L | 0.20 | | 88.2 | 80-120 | 1.14 | 20 | |
| Thallium | **0.195** | 0.10 | mg/L | 0.20 | | 97.5 | 80-120 | 0.358 | 20 | |
| Vanadium | **0.187** | 0.20 | mg/L | 0.20 | | 93.4 | 80-120 | 0.214 | 20 | |
| Zinc | **0.212** | 0.050 | mg/L | 0.20 | | 106 | 80-120 | 0.189 | 20 | |
| **Duplicate (B6E0323-DUP1)** | | | **Source: 6D28026-06** | Prepared: 05/03/16 | | Analyzed: 05/04/16 | | | | |
| Antimony | **<0.20** | 0.20 | mg/L | | | | | | 30 | |
| Arsenic | **<0.0070** | 0.0070 | mg/L | | | | | | 30 | |
| Barium | **0.471** | 0.20 | mg/L | | 0.466 | | | 1.05 | 30 | |
| Beryllium | **<0.020** | 0.020 | mg/L | | | | | | 30 | |
| Cadmium | **<0.020** | 0.020 | mg/L | | | | | | 30 | |
| Chromium | **1.06** | 0.050 | mg/L | | 1.09 | | | 2.80 | 30 | |
| Cobalt | **0.135** | 0.050 | mg/L | | 0.140 | | | 3.72 | 30 | |
| Copper | **0.113** | 0.050 | mg/L | | 0.117 | | | 2.87 | 30 | |
| Lead | **<0.0050** | 0.0050 | mg/L | | | | | | 30 | |
| Molybdenum | **0.325** | 0.050 | mg/L | | | | | | 30 | |
| Nickel | **0.103** | 0.050 | mg/L | | 0.106 | | | 2.78 | 30 | |
| Selenium | **<0.0050** | 0.0050 | mg/L | | | | | | 30 | |
| Silver | **<0.020** | 0.020 | mg/L | | | | | | 30 | |
| Thallium | **<0.10** | 0.10 | mg/L | | | | | | 30 | |
| Vanadium | **0.218** | 0.20 | mg/L | | 0.224 | | | 2.81 | 30 | |
| Zinc | **0.122** | 0.050 | mg/L | | 0.125 | | | 2.34 | 30 | |
| **Matrix Spike (B6E0323-MS1)** | | | **Source: 6D28026-16** | Prepared: 05/03/16 | | Analyzed: 05/04/16 | | | | |
| Antimony | **0.187** | 0.20 | mg/L | 0.20 | | 93.6 | 75-125 | | | |
| Arsenic | **0.195** | 0.0070 | mg/L | 0.20 | 0.00700 | 93.8 | 75-125 | | | |
| Barium | **1.12** | 0.20 | mg/L | 0.20 | 1.07 | 26.5 | 75-125 | | | QM-07 |
| Beryllium | **0.192** | 0.020 | mg/L | 0.20 | | 96.2 | 75-125 | | | |
| Cadmium | **0.186** | 0.020 | mg/L | 0.20 | | 93.1 | 75-125 | | | |
| Chromium | **0.731** | 0.050 | mg/L | 0.20 | 0.619 | 55.9 | 75-125 | | | QM-07 |
| Cobalt | **0.298** | 0.050 | mg/L | 0.20 | 0.134 | 81.8 | 75-125 | | | |

**Viorel Vasile**
Operations Manager

# LABORATORY ANALYSIS RESULTS

**Client:** Stantec (TO)
**Project No:** 2057123300
**Project Name:** Grayson Power Plant Glendale Phase II

**AA Project No:** A732174
**Date Received:** 04/27/16
**Date Reported:** 05/10/16

| Analyte | Result | Reporting Limit | Units | Spike Level | Source Result | %REC | %REC Limits | RPD | RPD Limit | Notes |
|---|---|---|---|---|---|---|---|---|---|---|
| **Total Metals CAM 17 - Quality Control** | | | | | | | | | | |
| *Batch B6E0323 - EPA 3010A* | | | | | | | | | | |
| **Matrix Spike (B6E0323-MS1) Continued Source: 6D28026-16** Prepared: 05/03/16 Analyzed: 05/04/16 | | | | | | | | | | |
| Copper | **0.274** | 0.050 | mg/L | 0.20 | 0.109 | 82.8 | 75-125 | | | |
| Lead | **0.188** | 0.0050 | mg/L | 0.20 | | 94.2 | 75-125 | | | |
| Molybdenum | **0.311** | 0.050 | mg/L | 0.20 | | 156 | 75-125 | | | QM-07 |
| Nickel | **0.244** | 0.050 | mg/L | 0.20 | 0.0810 | 81.6 | 75-125 | | | |
| Selenium | **0.203** | 0.0050 | mg/L | 0.20 | | 102 | 75-125 | | | |
| Silver | **0.177** | 0.020 | mg/L | 0.20 | | 88.6 | 75-125 | | | |
| Thallium | **0.209** | 0.10 | mg/L | 0.20 | | 105 | 75-125 | | | |
| Vanadium | **0.349** | 0.20 | mg/L | 0.20 | | 174 | 75-125 | | | QM-07 |
| Zinc | **0.329** | 0.050 | mg/L | 0.20 | 0.168 | 80.6 | 75-125 | | | |
| **Matrix Spike Dup (B6E0323-MSD1) Source: 6D28026-16** Prepared: 05/03/16 Analyzed: 05/04/16 | | | | | | | | | | |
| Antimony | **0.181** | 0.20 | mg/L | 0.20 | | 90.6 | 75-125 | 3.31 | 20 | |
| Arsenic | **0.195** | 0.0070 | mg/L | 0.20 | 0.00700 | 94.0 | 75-125 | 0.205 | 20 | |
| Barium | **1.18** | 0.20 | mg/L | 0.20 | 1.07 | 52.0 | 75-125 | 4.43 | 20 | QM-07 |
| Beryllium | **0.189** | 0.020 | mg/L | 0.20 | | 94.4 | 75-125 | 1.89 | 20 | |
| Cadmium | **0.183** | 0.020 | mg/L | 0.20 | | 91.4 | 75-125 | 1.90 | 20 | |
| Chromium | **0.753** | 0.050 | mg/L | 0.20 | 0.619 | 67.2 | 75-125 | 3.05 | 20 | QM-07 |
| Cobalt | **0.300** | 0.050 | mg/L | 0.20 | 0.134 | 82.6 | 75-125 | 0.603 | 20 | |
| Copper | **0.276** | 0.050 | mg/L | 0.20 | 0.109 | 83.6 | 75-125 | 0.581 | 20 | |
| Lead | **0.186** | 0.0050 | mg/L | 0.20 | | 92.8 | 75-125 | 1.44 | 20 | |
| Molybdenum | **0.316** | 0.050 | mg/L | 0.20 | | 158 | 75-125 | 1.40 | 20 | QM-07 |
| Nickel | **0.249** | 0.050 | mg/L | 0.20 | 0.0810 | 84.2 | 75-125 | 2.11 | 20 | |
| Selenium | **0.198** | 0.0050 | mg/L | 0.20 | | 99.2 | 75-125 | 2.34 | 20 | |
| Silver | **0.180** | 0.020 | mg/L | 0.20 | | 90.1 | 75-125 | 1.68 | 20 | |
| Thallium | **0.228** | 0.10 | mg/L | 0.20 | | 114 | 75-125 | 8.69 | 20 | |
| Vanadium | **0.352** | 0.20 | mg/L | 0.20 | | 176 | 75-125 | 0.800 | 20 | QM-07 |
| Zinc | **0.324** | 0.050 | mg/L | 0.20 | 0.168 | 77.8 | 75-125 | 1.65 | 20 | |
| **Total Metals CAM 17 - Quality Control** | | | | | | | | | | |
| *Batch B6E0221 - EPA 7471A Prep* | | | | | | | | | | |
| **Blank (B6E0221-BLK1)** Prepared & Analyzed: 05/02/16 | | | | | | | | | | |
| Mercury | <0.020 | 0.020 | mg/kg | | | | | | | |
| **LCS (B6E0221-BS1)** Prepared & Analyzed: 05/02/16 | | | | | | | | | | |

**Viorel Vasile**
Operations Manager

# LABORATORY ANALYSIS RESULTS

**Client:** Stantec (TO)
**Project No:** 2057123300
**Project Name:** Grayson Power Plant Glendale Phase II

**AA Project No:** A732174
**Date Received:** 04/27/16
**Date Reported:** 05/10/16

| Analyte | Result | Reporting Limit | Units | Spike Level | Source Result | %REC | %REC Limits | RPD | RPD Limit | Notes |
|---|---|---|---|---|---|---|---|---|---|---|
| **Total Metals CAM 17 - Quality Control** | | | | | | | | | | |
| *Batch B6E0221 - EPA 7471A Prep* | | | | | | | | | | |
| **LCS (B6E0221-BS1) Continued** | | | | Prepared & Analyzed: 05/02/16 | | | | | | |
| Mercury | **0.541** | 0.020 | mg/kg | 0.50 | | 108 | 80-120 | | | |
| **LCS Dup (B6E0221-BSD1)** | | | | Prepared & Analyzed: 05/02/16 | | | | | | |
| Mercury | **0.540** | 0.020 | mg/kg | 0.50 | | 108 | 80-120 | 0.278 | 25 | |
| **Matrix Spike (B6E0221-MS1)** | | | **Source: 6D29007-01** | Prepared & Analyzed: 05/02/16 | | | | | | |
| Mercury | **0.609** | 0.020 | mg/kg | 0.50 | 0.0865 | 104 | 75-125 | | | |
| **Matrix Spike Dup (B6E0221-MSD1)** | | | **Source: 6D29007-01** | Prepared & Analyzed: 05/02/16 | | | | | | |
| Mercury | **0.633** | 0.020 | mg/kg | 0.50 | 0.0865 | 109 | 75-125 | 3.86 | 25 | |
| *Batch B6E0328 - EPA 7470A Prep* | | | | | | | | | | |
| **Blank (B6E0328-BLK1)** | | | | Prepared & Analyzed: 05/03/16 | | | | | | |
| Mercury | <0.00050 | 0.00050 | mg/L | | | | | | | |
| **LCS (B6E0328-BS1)** | | | | Prepared & Analyzed: 05/03/16 | | | | | | |
| Mercury | **0.0104** | 0.00050 | mg/L | 0.010 | | 104 | 80-120 | | | |
| **LCS Dup (B6E0328-BSD1)** | | | | Prepared & Analyzed: 05/03/16 | | | | | | |
| Mercury | **0.0105** | 0.00050 | mg/L | 0.010 | | 105 | 80-120 | 1.00 | 20 | |
| **Duplicate (B6E0328-DUP1)** | | | **Source: 6D27022-04** | Prepared & Analyzed: 05/03/16 | | | | | | |
| Mercury | **<0.00050** | 0.00050 | mg/L | | 0.00050 | | | | 25 | |
| **Matrix Spike (B6E0328-MS1)** | | | **Source: 6D28026-16** | Prepared & Analyzed: 05/03/16 | | | | | | |
| Mercury | **0.0104** | 0.00050 | mg/L | 0.010 | | 104 | 75-125 | | | |
| **Matrix Spike Dup (B6E0328-MSD1)** | | | **Source: 6D28026-16** | Prepared & Analyzed: 05/03/16 | | | | | | |
| Mercury | **0.0105** | 0.00050 | mg/L | 0.010 | | 105 | 75-125 | 1.15 | 20 | |

**Viorel Vasile**
Operations Manager

# LABORATORY ANALYSIS RESULTS

| | | | |
|---|---|---|---|
| **Client:** | Stantec (TO) | **AA Project No:** | A732174 |
| **Project No:** | 2057123300 | **Date Received:** | 04/27/16 |
| **Project Name:** | Grayson Power Plant Glendale Phase II | **Date Reported:** | 05/10/16 |

**Special Notes**

**[1] = **** : Exceeds lower control limit

**[2] = ***** : Exceeds upper control limit

**[3] = **a** : Exceeds upper control limit

**[4] = AA-C1** : The reported concentration is mainly from the contribution of chlorinated compounds present in the sample

**[5] = D-35** : Sample does not display a fuel pattern. Sample contains several discrete peaks.

**[6] = QM-07** : The spike recovery was outside acceptance limits for the MS and/or MSD. The batch was accepted based on acceptable LCS recovery.

Gasoline Range Organics (GRO) concentration represents the C4-C12 carbon range.

**Viorel Vasile**
Operations Manager

129962

Stantec

# CHAIN OF CUSTODY FORM

25864-F Business Center Dr., Redlands, CA 92374 (909) 335-6116, Fax (909) 335-6120

A732174/GD27022



Client Name/Address:
Stantec
25864-F Business Center Drive
Redlands, CA 92374

Project/PO Number: 2057123700

Project Manager: Carl Hasse
Email Address: Carl.Hasse@Stantec.com

Phone Number: 909-335-6116

Fax Number: 909-335-6120

Sampler: J. Sargent Joshua.Sargent@Stantec.com

Laboratory: American Analytics

Analysis Requested

PRIORITY
Rush Date 4/27/16 Time Hrs
SH
Assign

| Sample Description | Sample Matrix | Container Type | # of Cont. | Sampling Date | Sampling Time | Preservatives | TPH (Gasoline Range) 8015 | VOC's by Method 8260 | Arsenic (As) 7194 | Cadmium Method 6010 | Field | | | Lab Sample No. | Special Instructions |
|---|---|---|---|---|---|---|---|---|---|---|---|---|---|---|---|
| SB-12-20 | Soil | Terra Core | 4 | 4/27/16 | 0710 | ICE | X | X | | | | | | -01 | PID: 0.0 |
| SB-12-30 | " | " | 4 | | 0714 | | | | | | X | | | -02 | PID: 1.7 |
| SB-12-40 | " | Varies | 4 | | 0726 | | X | X | X | | | | | -03 | PID: 6.2 |
| SB-12-GW | GW | Varies | 7 | | 0516 | | X | X | X | X | | | | -04 | — |
| SB 8-1 | S | | 1 | | 0857 | | | | | X | | | | -05 | PID: 0.3 |
| SB-8-20 | S | | 4 | | 0924 | | X | X | | | | | | -06 | PID: 0.5 |
| SB-8-25 | S | | 4 | | 0925 | | X | X | X | | | | | -07 | PID: 1.36 |
| SB 8-40 | S | | 4 | | 0944 | | | | | | X | | | -08 | PID: 10.8 |
| SB 6-1 | S | | 1 | | 1104 | | | | | X | | | | -09 | PID: 25.02 |
| SB-6-10 | S | | 4 | | 1240 | | X | X | X | | | | | -10 | PID: 18.5 |
| SB-6-15 | S | | 4 | | 1242 | | X | X | | | X | | | -11 | PID: 1.4 |
| SB-6-35 | S | | 4 | | 1251 | | X | X | | | X | | | -12 | PID: 2.5 |

| Relinquished By: | Date/Time: | Received By: | Date/Time: |
|---|---|---|---|
| | | | 4-27-16 17:26 |
| Relinquished By: | Date/Time: 4.27.16 1420 | Received By: | Date/Time: 4/27/16 1515 |
| Relinquished By: | Date/Time: | Received in Lab By: | Date/Time: |

TAT Required Time: Same day / 24 hour / 48 hour / 72 hours / 5 days / normal

Sample Integrity: (Check)
intact X on ice X

**Note:** By relinquishing samples, client agrees to pay for the services requested on this chain of custody form and any additional analyses performed on this project. Payment for services is due within 30 days from the date of invoice. Sample(s) will be disposed of after 30 days.

123494

Stantec

# CHAIN OF CUSTODY FORM

25864-F Business Center Dr., Redlands, CA 92374 (909) 335-6116 fax (909) 335-6120

A732174/6027022



Client Name/Address:
Stantec
25864-F Business Center Drive
Redlands, CA 92374

Project/PO Number: 205712330 0

Laboratory: Harrison Laboratories

Project Manager: Carl Hosse
Email Address: Carl.Hosse@stantec.com

Phone Number: 909 335 6116

Fax Number: 909-335-6120

Sampler: J. Sargent Joshua.Sargent@Stantec.com

Analysis Required

PRIORITY
Rush Date 4/27/16 Time 16:00 Sign
Hrs
SH ✓

| Sample Description | Sample Matrix | Container Type | # of Cont. | Sampling Date | Sampling Time | Preservatives | TPH Bons | Vac adjustment | Cam 17 metals | Lead | C (N) TPH | HOLD | | | Special Instructions |
|---|---|---|---|---|---|---|---|---|---|---|---|---|---|---|---|
| SB-7-1 | S | Varis | 1 | 4.27.16 | 1134 | Varies | | | X | | | | | -13 | PID: 0.1 |
| SB 7 - 10 | S | | 4 | | 1335 | | X | X | | | | | | -14 | PID: 0.4 |
| SB 7 - 15 | S | | 4 | | 1337 | | X | X | | X | | | | -15 | PID: 2.3 |
| SB-7 - 35 | S | | 4 | | 1350 | | | | | | X | | | -16 | PID: 0.2 |
| TRIP BLANK | W | VOA | 2 | NA | NA | | | X | | | | | | -17 | ~~PID~~ |

| Relinquished By: | Date/Time: | Received By: | Date/Time: |
|---|---|---|---|
| | 4.27.16 1420 | | 4-27-16 - 1728 |
| Relinquished By: | Date/Time: | Received By: | Date/Time: 4/27/16 1815 |
| Relinquished By: | Date/Time: | Received in Lab By: | Date/Time: |

TAT Hours Time: Same day / 72 hours; 24 hour / 5 days; 48 hour / normal

Sample Integrity: (Check) intact X on ice X

**Note:** By relinquishing samples, client agrees to pay for the services requested on this chain of custody form and any additional analyses performed on this project. Payment for services is due within 30 days from the date of invoice. Sample(s) will be disposed of after 30 days.

9765 Eton Avenue
Chatsworth
California 91311
Tel: (818) 998-5547
Fax: (818) 998-7258

May 12, 2016

Anuya Sawant

Stantec (TO)

290 Conejo Ridge Ave. Suite #200

Thousand Oaks, CA 91361

**Re : Grayson Power Plant Glendale Phase II / 2057123300**

**A732176 / 6D28026**

Enclosed is an analytical report for the above-referenced project. The samples included in this report were received on 04/28/16 15:28 and analyzed in accordance with the attached chain-of-custody.

Unless otherwise noted, all analytical testing was accomplished in accordance with the guidelines established in our Quality Assurance Program Manual, applicable standard operating procedures, and other related documentation. The results in this analytical report are limited to the samples tested and any reproduction thereof must be made in its entirety.

If you have any questions regarding this report or require additional information please call me at American Analytics.

Sincerely,

Viorel Vasile

Operations Manager

# LABORATORY ANALYSIS RESULTS

**Client:** Stantec (TO)
**Project No:** 2057123300
**Project Name:** Grayson Power Plant Glendale Phase II

**AA Project No:** A732176
**Date Received:** 04/28/16
**Date Reported:** 05/12/16

| Sample ID | Laboratory ID | Matrix | TAT | Date Sampled | Date Received |
|---|---|---|---|---|---|
| **7199 Hexavalent Chromium by IC - Low Level** | | | | | |
| SB-3-35 | 6D28026-04 | Soil | 7 | 04/28/16 07:09 | 04/28/16 15:28 |
| SB-3-GW | 6D28026-06 | Water | 7 | 04/28/16 07:43 | 04/28/16 15:28 |
| SB-5-20 | 6D28026-09 | Soil | 7 | 04/28/16 08:48 | 04/28/16 15:28 |
| SB-5-GW | 6D28026-11 | Water | 7 | 04/28/16 11:10 | 04/28/16 15:28 |
| SB-9-10 | 6D28026-14 | Soil | 7 | 04/28/16 11:50 | 04/28/16 15:28 |
| SB-9-GW | 6D28026-16 | Water | 7 | 04/28/16 12:44 | 04/28/16 15:28 |
| SB-11-5 | 6D28026-18 | Soil | 7 | 04/28/16 13:33 | 04/28/16 15:28 |
| **8260B/5035 +OXY+TPHG** | | | | | |
| SB-3-35 | 6D28026-04 | Soil | 7 | 04/28/16 07:09 | 04/28/16 15:28 |
| SB-3-40 | 6D28026-05 | Soil | 7 | 04/28/16 07:12 | 04/28/16 15:28 |
| SB-5-20 | 6D28026-09 | Soil | 7 | 04/28/16 08:48 | 04/28/16 15:28 |
| SB-5-30 | 6D28026-10 | Soil | 7 | 04/28/16 08:57 | 04/28/16 15:28 |
| SB-9-5 | 6D28026-13 | Soil | 7 | 04/28/16 11:45 | 04/28/16 15:28 |
| SB-9-10 | 6D28026-14 | Soil | 7 | 04/28/16 11:50 | 04/28/16 15:28 |
| SB-11-5 | 6D28026-18 | Soil | 7 | 04/28/16 13:33 | 04/28/16 15:28 |
| SB-11-35 | 6D28026-20 | Soil | 7 | 04/28/16 14:00 | 04/28/16 15:28 |
| **8260B+OXY+TPHG** | | | | | |
| Trip Blank | 6D28026-01 | Water | 7 | 04/28/16 00:00 | 04/28/16 15:28 |

**Viorel Vasile**
Operations Manager

# LABORATORY ANALYSIS RESULTS

**Client:** Stantec (TO)
**Project No:** 2057123300
**Project Name:** Grayson Power Plant Glendale Phase II

**AA Project No:** A732176
**Date Received:** 04/28/16
**Date Reported:** 05/12/16

| Sample ID | Laboratory ID | Matrix | TAT | Date Sampled | Date Received |
|---|---|---|---|---|---|
| SB-3-GW | 6D28026-06 | Water | 7 | 04/28/16 07:43 | 04/28/16 15:28 |
| SB-5-GW | 6D28026-11 | Water | 7 | 04/28/16 11:10 | 04/28/16 15:28 |
| SB-9-GW | 6D28026-16 | Water | 7 | 04/28/16 12:44 | 04/28/16 15:28 |
| **CAM Metals Less Hg 6000/7000** | | | | | |
| SB-3-1 | 6D28026-02 | Soil | 7 | 04/28/16 06:43 | 04/28/16 15:28 |
| SB-3-GW | 6D28026-06 | Water | 7 | 04/28/16 07:43 | 04/28/16 15:28 |
| SB-5-1 | 6D28026-07 | Soil | 7 | 04/28/16 08:26 | 04/28/16 15:28 |
| SB-5-GW | 6D28026-11 | Water | 7 | 04/28/16 11:10 | 04/28/16 15:28 |
| SB-9-1 | 6D28026-12 | Soil | 7 | 04/28/16 11:31 | 04/28/16 15:28 |
| SB-9-GW | 6D28026-16 | Water | 7 | 04/28/16 12:44 | 04/28/16 15:28 |
| SB-11-1 | 6D28026-17 | Soil | 7 | 04/28/16 13:25 | 04/28/16 15:28 |
| **Carbon Chain Characterization 8015M** | | | | | |
| SB-3-35 | 6D28026-04 | Soil | 7 | 04/28/16 07:09 | 04/28/16 15:28 |
| SB-3-40 | 6D28026-05 | Soil | 7 | 04/28/16 07:12 | 04/28/16 15:28 |
| SB-3-GW | 6D28026-06 | Water | 7 | 04/28/16 07:43 | 04/28/16 15:28 |
| SB-5-20 | 6D28026-09 | Soil | 7 | 04/28/16 08:48 | 04/28/16 15:28 |
| SB-5-30 | 6D28026-10 | Soil | 7 | 04/28/16 08:57 | 04/28/16 15:28 |
| SB-5-GW | 6D28026-11 | Water | 7 | 04/28/16 11:10 | 04/28/16 15:28 |
| SB-9-5 | 6D28026-13 | Soil | 7 | 04/28/16 11:45 | 04/28/16 15:28 |

**Viorel Vasile**
Operations Manager

# LABORATORY ANALYSIS RESULTS

**Client:** Stantec (TO)
**Project No:** 2057123300
**Project Name:** Grayson Power Plant Glendale Phase II

**AA Project No:** A732176
**Date Received:** 04/28/16
**Date Reported:** 05/12/16

| Sample ID | Laboratory ID | Matrix | TAT | Date Sampled | Date Received |
|---|---|---|---|---|---|
| SB-9-10 | 6D28026-14 | Soil | 7 | 04/28/16 11:50 | 04/28/16 15:28 |
| SB-9-GW | 6D28026-16 | Water | 7 | 04/28/16 12:44 | 04/28/16 15:28 |
| SB-11-5 | 6D28026-18 | Soil | 7 | 04/28/16 13:33 | 04/28/16 15:28 |
| SB-11-35 | 6D28026-20 | Soil | 7 | 04/28/16 14:00 | 04/28/16 15:28 |
| **Mercury Total EPA 7470A/7471A** | | | | | |
| SB-3-1 | 6D28026-02 | Soil | 7 | 04/28/16 06:43 | 04/28/16 15:28 |
| SB-3-GW | 6D28026-06 | Water | 7 | 04/28/16 07:43 | 04/28/16 15:28 |
| SB-5-1 | 6D28026-07 | Soil | 7 | 04/28/16 08:26 | 04/28/16 15:28 |
| SB-5-GW | 6D28026-11 | Water | 7 | 04/28/16 11:10 | 04/28/16 15:28 |
| SB-9-1 | 6D28026-12 | Soil | 7 | 04/28/16 11:31 | 04/28/16 15:28 |
| SB-9-GW | 6D28026-16 | Water | 7 | 04/28/16 12:44 | 04/28/16 15:28 |
| SB-11-1 | 6D28026-17 | Soil | 7 | 04/28/16 13:25 | 04/28/16 15:28 |

**Viorel Vasile**
Operations Manager

# LABORATORY ANALYSIS RESULTS

**Client:** Stantec (TO)
**Project No:** 2057123300
**Project Name:** Grayson Power Plant Glendale Phase II
**Method:** Carbon Chain by GC/FID

**AA Project No:** A732176
**Date Received:** 04/28/16
**Date Reported:** 05/12/16
**Units:** mg/kg

| | | | | | |
|---|---|---|---|---|---|
| **Date Sampled:** | 04/28/16 | 04/28/16 | 04/28/16 | 04/28/16 | |
| **Date Prepared:** | 05/03/16 | 05/03/16 | 05/03/16 | 05/03/16 | |
| **Date Analyzed:** | 05/03/16 | 05/03/16 | 05/03/16 | 05/03/16 | |
| **AA ID No:** | 6D28026-04 | 6D28026-05 | 6D28026-09 | 6D28026-10 | |
| **Client ID No:** | SB-3-35 | SB-3-40 | SB-5-20 | SB-5-30 | |
| **Matrix:** | Soil | Soil | Soil | Soil | |
| **Dilution Factor:** | 1 | 1 | 1 | 1 | MRL |
| **Carbon Chain Characterization 8015M (EPA 8015M)** | | | | | |
| C6-C8 | <1.0 | <1.0 | <1.0 | <1.0 | 1.0 |
| C8-C10 | <1.0 | <1.0 | <1.0 | <1.0 | 1.0 |
| C10-C12 | <1.0 | <1.0 | <1.0 | <1.0 | 1.0 |
| C12-C14 | <1.0 | <1.0 | <1.0 | <1.0 | 1.0 |
| C14-C16 | **3.2** | **2.1** | **2.6** | <1.0 | 1.0 |
| C16-C18 | <1.0 | <1.0 | <1.0 | <1.0 | 1.0 |
| C18-C20 | <1.0 | <1.0 | <1.0 | <1.0 | 1.0 |
| C20-C22 | <1.0 | <1.0 | <1.0 | <1.0 | 1.0 |
| C22-C24 | <1.0 | <1.0 | <1.0 | <1.0 | 1.0 |
| C24-C26 | <1.0 | <1.0 | <1.0 | <1.0 | 1.0 |
| C26-C28 | <1.0 | <1.0 | **1.1** | <1.0 | 1.0 |
| C28-C32 | <1.0 | <1.0 | **2.7** | <1.0 | 1.0 |
| C32-C34 | <1.0 | <1.0 | **1.1** | <1.0 | 1.0 |
| C34-C36 | <1.0 | <1.0 | <1.0 | <1.0 | 1.0 |
| C36-C40 | <1.0 | <1.0 | **1.4** | <1.0 | 1.0 |
| C40-C44 | <1.0 | <1.0 | <1.0 | <1.0 | 1.0 |
| TPH (C6-C44) | <10 | <10 | **10** | <10 | 10 |
| **Surrogates** | | | | | **%REC Limits** |
| o-Terphenyl | 110% | 110% | 115% | 114% | 50-150 |

**Viorel Vasile**
Operations Manager

# LABORATORY ANALYSIS RESULTS

**Client:** Stantec (TO)
**Project No:** 2057123300
**Project Name:** Grayson Power Plant Glendale Phase II
**Method:** Carbon Chain by GC/FID

**AA Project No:** A732176
**Date Received:** 04/28/16
**Date Reported:** 05/12/16
**Units:** mg/kg

| | | | | | |
|---|---|---|---|---|---|
| **Date Sampled:** | 04/28/16 | 04/28/16 | 04/28/16 | 04/28/16 | |
| **Date Prepared:** | 05/03/16 | 05/03/16 | 05/03/16 | 05/03/16 | |
| **Date Analyzed:** | 05/03/16 | 05/03/16 | 05/03/16 | 05/03/16 | |
| **AA ID No:** | 6D28026-13 | 6D28026-14 | 6D28026-18 | 6D28026-20 | |
| **Client ID No:** | SB-9-5 | SB-9-10 | SB-11-5 | SB-11-35 | |
| **Matrix:** | Soil | Soil | Soil | Soil | |
| **Dilution Factor:** | 1 | 1 | 1 | 1 | MRL |
| **Carbon Chain Characterization 8015M (EPA 8015M)** | | | | | |
| C6-C8 | <1.0 | <1.0 | <1.0 | <1.0 | 1.0 |
| C8-C10 | <1.0 | <1.0 | <1.0 | <1.0 | 1.0 |
| C10-C12 | **1.4** | <1.0 | <1.0 | <1.0 | 1.0 |
| C12-C14 | <1.0 | <1.0 | <1.0 | **1.2** | 1.0 |
| C14-C16 | <1.0 | <1.0 | <1.0 | **2.1** | 1.0 |
| C16-C18 | <1.0 | <1.0 | <1.0 | <1.0 | 1.0 |
| C18-C20 | <1.0 | <1.0 | <1.0 | <1.0 | 1.0 |
| C20-C22 | <1.0 | <1.0 | <1.0 | <1.0 | 1.0 |
| C22-C24 | <1.0 | <1.0 | <1.0 | <1.0 | 1.0 |
| C24-C26 | **1.0** | <1.0 | <1.0 | <1.0 | 1.0 |
| C26-C28 | **2.3** | <1.0 | **1.2** | **2.3** | 1.0 |
| C28-C32 | **5.0** | **1.2** | **3.3** | **1.2** | 1.0 |
| C32-C34 | **3.1** | <1.0 | **1.5** | <1.0 | 1.0 |
| C34-C36 | **2.1** | <1.0 | **1.0** | <1.0 | 1.0 |
| C36-C40 | **5.4** | <1.0 | **2.9** | <1.0 | 1.0 |
| C40-C44 | <1.0 | <1.0 | <1.0 | <1.0 | 1.0 |
| TPH (C6-C44) | **20** | <10 | <10 | <10 | 10 |
| **Surrogates** | | | | | **%REC Limits** |
| o-Terphenyl | 115% | 113% | 116% | 120% | 50-150 |

**Viorel Vasile**
Operations Manager

# LABORATORY ANALYSIS RESULTS

**Client:** Stantec (TO)
**Project No:** 2057123300
**Project Name:** Grayson Power Plant Glendale Phase II
**Method:** Carbon Chain by GC/FID

**AA Project No:** A732176
**Date Received:** 04/28/16
**Date Reported:** 05/12/16
**Units:** mg/L

| | | | | |
|---|---|---|---|---|
| **Date Sampled:** | 04/28/16 | 04/28/16 | 04/28/16 | |
| **Date Prepared:** | 05/03/16 | 05/03/16 | 05/03/16 | |
| **Date Analyzed:** | 05/03/16 | 05/03/16 | 05/03/16 | |
| **AA ID No:** | 6D28026-06 | 6D28026-11 | 6D28026-16 | |
| **Client ID No:** | SB-3-GW | SB-5-GW | SB-9-GW | |
| **Matrix:** | Water | Water | Water | |
| **Dilution Factor:** | 1 | 1 | 1 | MRL |
| **Carbon Chain Characterization 8015M (EPA 8015M)** | | | | |
| C6-C8 | **0.010** | **0.030** | **0.023** | 0.010 |
| C8-C10 | <0.010 | <0.010 | <0.010 | 0.010 |
| C10-C12 | <0.010 | **0.012** | <0.010 | 0.010 |
| C12-C14 | **0.015** | **0.026** | **0.015** | 0.010 |
| C14-C16 | <0.010 | **0.013** | <0.010 | 0.010 |
| C16-C18 | <0.010 | **0.015** | <0.010 | 0.010 |
| C18-C20 | <0.010 | **0.016** | <0.010 | 0.010 |
| C20-C22 | <0.010 | **0.027** | <0.010 | 0.010 |
| C22-C24 | <0.010 | **0.010** | <0.010 | 0.010 |
| C24-C26 | <0.010 | <0.010 | <0.010 | 0.010 |
| C26-C28 | <0.010 | <0.010 | <0.010 | 0.010 |
| C28-C32 | <0.010 | **0.013** | <0.010 | 0.010 |
| C32-C34 | <0.010 | <0.010 | <0.010 | 0.010 |
| C34-C36 | <0.010 | <0.010 | <0.010 | 0.010 |
| C36-C40 | <0.010 | <0.010 | <0.010 | 0.010 |
| C40-C44 | <0.010 | <0.010 | <0.010 | 0.010 |
| TPH (C6-C44) | <0.10 | **0.15** | <0.10 | 0.10 |
| **Surrogates** | | | | **%REC Limits** |
| o-Terphenyl | 102% | 89% | 109% | 50-150 |

**Viorel Vasile**
Operations Manager

# LABORATORY ANALYSIS RESULTS

**Client:** Stantec (TO)
**Project No:** 2057123300
**Project Name:** Grayson Power Plant Glendale Phase II
**Method:** Cations by Ion Chromatography

**AA Project No:** A732176
**Date Received:** 04/28/16
**Date Reported:** 05/12/16

| AA I.D. No. | Client I.D. No. | Sampled | Prepared | Analyzed | Dilution | Result | Units | MRL |
|---|---|---|---|---|---|---|---|---|
| **7199 Hexavalent Chromium by IC - Low Level (EPA 7199)** | | | | | | | | |
| 6D28026-04 | SB-3-35 | 04/28/16 | 05/05/16 | 05/05/16 | 1 | <0.040 | mg/kg | 0.04 |
| 6D28026-09 | SB-5-20 | 04/28/16 | 05/05/16 | 05/05/16 | 1 | <0.040 | mg/kg | 0.04 |
| 6D28026-14 | SB-9-10 | 04/28/16 | 05/05/16 | 05/05/16 | 1 | <0.040 | mg/kg | 0.04 |
| 6D28026-18 | SB-11-5 | 04/28/16 | 05/05/16 | 05/05/16 | 1 | <0.040 | mg/kg | 0.04 |

**Viorel Vasile**
Operations Manager

# LABORATORY ANALYSIS RESULTS

**Client:** Stantec (TO)
**Project No:** 2057123300
**Project Name:** Grayson Power Plant Glendale Phase II
**Method:** Cations by Ion Chromatography

**AA Project No:** A732176
**Date Received:** 04/28/16
**Date Reported:** 05/12/16

| AA I.D. No. | Client I.D. No. | Sampled | Prepared | Analyzed | Dilution | Result | Units | MRL |
|---|---|---|---|---|---|---|---|---|
| **7199 Hexavalent Chromium by IC - Low Level (EPA 7199)** | | | | | | | | |
| 6D28026-06 | SB-3-GW | 04/28/16 | 04/28/16 | 04/28/16 | 1 | <0.30 | ug/L | 0.3 |
| 6D28026-11 | SB-5-GW | 04/28/16 | 04/28/16 | 04/28/16 | 1 | <0.30 | ug/L | 0.3 |
| 6D28026-16 | SB-9-GW | 04/28/16 | 04/28/16 | 04/28/16 | 1 | <0.30 | ug/L | 0.3 |

**Viorel Vasile**
Operations Manager

# LABORATORY ANALYSIS RESULTS

**Client:** Stantec (TO)
**Project No:** 2057123300
**Project Name:** Grayson Power Plant Glendale Phase II
**Method:** Total Metals CAM 17

**AA Project No:** A732176
**Date Received:** 04/28/16
**Date Reported:** 05/12/16
**Units:** mg/kg

| | | | | | |
|---|---|---|---|---|---|
| **Date Sampled:** | 04/28/16 | 04/28/16 | 04/28/16 | 04/28/16 | |
| **Date Prepared:** | 05/02/16 | 05/02/16 | 05/02/16 | 05/02/16 | |
| **Date Analyzed:** | 05/02/16 | 05/02/16 | 05/02/16 | 05/02/16 | |
| **AA ID No:** | 6D28026-02 | 6D28026-07 | 6D28026-12 | 6D28026-17 | |
| **Client ID No:** | SB-3-1 | SB-5-1 | SB-9-1 | SB-11-1 | |
| **Matrix:** | Soil | Soil | Soil | Soil | |
| **Dilution Factor:** | 1 | 1 | 1 | 1 | MRL |
| **Mercury Total EPA 7470A/7471A (EPA 7471A)** | | | | | |
| Mercury | **0.021** | **0.083** | **0.063** | **0.088** | 0.020 |

**Viorel Vasile**
Operations Manager

# LABORATORY ANALYSIS RESULTS

**Client:** Stantec (TO)
**Project No:** 2057123300
**Project Name:** Grayson Power Plant Glendale Phase II
**Method:** Total Metals CAM 17

**AA Project No:** A732176
**Date Received:** 04/28/16
**Date Reported:** 05/12/16
**Units:** mg/L

| | | | | |
|---|---|---|---|---|
| **Date Sampled:** | 04/28/16 | 04/28/16 | 04/28/16 | |
| **Date Prepared:** | 05/03/16 | 05/03/16 | 05/03/16 | |
| **Date Analyzed:** | 05/03/16 | 05/03/16 | 05/03/16 | |
| **AA ID No:** | 6D28026-06 | 6D28026-11 | 6D28026-16 | |
| **Client ID No:** | SB-3-GW | SB-5-GW | SB-9-GW | |
| **Matrix:** | Water | Water | Water | |
| **Dilution Factor:** | 1 | 1 | 1 | MRL |
| **Mercury Total EPA 7470A/7471A (EPA 7470A)** | | | | |
| Mercury | <0.00050 | <0.00050 | <0.00050 | 0.00050 |

**Viorel Vasile**
Operations Manager

# LABORATORY ANALYSIS RESULTS

**Client:** Stantec (TO)
**Project No:** 2057123300
**Project Name:** Grayson Power Plant Glendale Phase II
**Method:** Total Metals CAM 17

**AA Project No:** A732176
**Date Received:** 04/28/16
**Date Reported:** 05/12/16
**Units:** mg/kg

| | | | | | |
|---|---|---|---|---|---|
| **Date Sampled:** | 04/28/16 | 04/28/16 | 04/28/16 | 04/28/16 | |
| **Date Prepared:** | 05/02/16 | 05/02/16 | 05/02/16 | 05/02/16 | |
| **Date Analyzed:** | 05/03/16 | 05/03/16 | 05/03/16 | 05/03/16 | |
| **AA ID No:** | 6D28026-02 | 6D28026-07 | 6D28026-12 | 6D28026-17 | |
| **Client ID No:** | SB-3-1 | SB-5-1 | SB-9-1 | SB-11-1 | |
| **Matrix:** | Soil | Soil | Soil | Soil | |
| **Dilution Factor:** | 1 | 1 | 1 | 1 | MRL |
| **CAM Metals Less Hg 6000/7000 (EPA 6010B/7000)** | | | | | |
| Antimony | <10 | <10 | <10 | <10 | 10 |
| Arsenic | **11** | **2.3** | **1.8** | **3.0** | 0.50 |
| Barium | **190** | **130** | **97** | **110** | 10 |
| Beryllium | <1.0 | <1.0 | <1.0 | <1.0 | 1.0 |
| Cadmium | <1.0 | <1.0 | <1.0 | <1.0 | 1.0 |
| Chromium | **25** | **13** | **11** | **13** | 3.0 |
| Cobalt | **15** | **9.8** | **7.8** | **10** | 3.0 |
| Copper | **36** | **16** | **13** | **17** | 3.0 |
| Lead | **9.8** | **9.2** | **7.5** | **11** | 3.0 |
| Molybdenum | <5.0 | <5.0 | <5.0 | <5.0 | 5.0 |
| Nickel | **20** | **8.6** | **7.6** | **9.9** | 3.0 |
| Selenium | <0.50 | <0.50 | <0.50 | <0.50 | 0.50 |
| Silver | <1.0 | <1.0 | <1.0 | <1.0 | 1.0 |
| Thallium | <5.0 | <5.0 | <5.0 | <5.0 | 5.0 |
| Vanadium | **69** | **48** | **38** | **49** | 10 |
| Zinc | **94** | **83** | **56** | **76** | 3.0 |

**Viorel Vasile**
Operations Manager

# LABORATORY ANALYSIS RESULTS

**Client:** Stantec (TO)
**Project No:** 2057123300
**Project Name:** Grayson Power Plant Glendale Phase II
**Method:** VOCs, OXY & TPH Gasoline by GC/MS

**AA Project No:** A732176
**Date Received:** 04/28/16
**Date Reported:** 05/12/16
**Units:** ug/L

| | | | | | |
|---|---|---|---|---|---|
| **Date Sampled:** | 04/28/16 | 04/28/16 | 04/28/16 | 04/28/16 | |
| **Date Prepared:** | 05/10/16 | 05/10/16 | 05/10/16 | 05/10/16 | |
| **Date Analyzed:** | 05/10/16 | 05/10/16 | 05/10/16 | 05/10/16 | |
| **AA ID No:** | 6D28026-01 | 6D28026-06 | 6D28026-11 | 6D28026-16 | |
| **Client ID No:** | Trip Blank | SB-3-GW | SB-5-GW | SB-9-GW | |
| **Matrix:** | Water | Water | Water | Water | |
| **Dilution Factor:** | 1 | 1 | 1 | 1 | MRL |
| **8260B+OXY+TPHG (EPA 8260B)** | | | | | |
| Acetone | <10 | <10 | <10 | <10 | 10 |
| tert-Amyl Methyl Ether (TAME) | <2.0 | <2.0 | <2.0 | <2.0 | 2.0 |
| Benzene | <0.50 | <0.50 | <0.50 | <0.50 | 0.50 |
| Bromobenzene | <0.50 | <0.50 | <0.50 | <0.50 | 0.50 |
| Bromochloromethane | <0.50 | <0.50 | <0.50 | <0.50 | 0.50 |
| Bromodichloromethane | <0.50 | <0.50 | <0.50 | <0.50 | 0.50 |
| Bromoform | <0.50 | <0.50 | <0.50 | <0.50 | 0.50 |
| Bromomethane | <0.50 | <0.50 | <0.50 | <0.50 | 0.50 |
| 2-Butanone (MEK) | <10 | <10 | <10 | <10 | 10 |
| tert-Butyl alcohol (TBA) | <10 | <10 | <10 | <10 | 10 |
| sec-Butylbenzene | <0.50 | <0.50 | <0.50 | <0.50 | 0.50 |
| tert-Butylbenzene | <0.50 | <0.50 | <0.50 | <0.50 | 0.50 |
| n-Butylbenzene | <0.50 | <0.50 | <0.50 | <0.50 | 0.50 |
| Carbon Disulfide | <0.50 | <0.50 | <0.50 | <0.50 | 0.50 |
| Carbon Tetrachloride | <0.50 | <0.50 | <0.50 | <0.50 | 0.50 |
| Chlorobenzene | <0.50 | <0.50 | <0.50 | <0.50 | 0.50 |
| Chloroethane | <0.50 | <0.50 | <0.50 | <0.50 | 0.50 |
| Chloroform | <0.50 | **2.0** | **1.3** | **2.7** | 0.50 |
| Chloromethane | <0.50 | <0.50 | <0.50 | <0.50 | 0.50 |
| 2-Chlorotoluene | <0.50 | <0.50 | <0.50 | <0.50 | 0.50 |
| 4-Chlorotoluene | <0.50 | <0.50 | <0.50 | <0.50 | 0.50 |
| 1,2-Dibromo-3-chloropropane | <1.0 | <1.0 | <1.0 | <1.0 | 1.0 |
| Dibromochloromethane | <0.50 | <0.50 | <0.50 | <0.50 | 0.50 |
| 1,2-Dibromoethane (EDB) | <0.50 | <0.50 | <0.50 | <0.50 | 0.50 |
| Dibromomethane | <0.50 | <0.50 | <0.50 | <0.50 | 0.50 |
| 1,3-Dichlorobenzene | <0.50 | <0.50 | <0.50 | <0.50 | 0.50 |
| 1,2-Dichlorobenzene | <0.50 | <0.50 | <0.50 | <0.50 | 0.50 |

**Viorel Vasile**
Operations Manager

# LABORATORY ANALYSIS RESULTS

**Client:** Stantec (TO)
**Project No:** 2057123300
**Project Name:** Grayson Power Plant Glendale Phase II
**Method:** VOCs, OXY & TPH Gasoline by GC/MS

**AA Project No:** A732176
**Date Received:** 04/28/16
**Date Reported:** 05/12/16
**Units:** ug/L

| | | | | | |
|---|---|---|---|---|---|
| **Date Sampled:** | 04/28/16 | 04/28/16 | 04/28/16 | 04/28/16 | |
| **Date Prepared:** | 05/10/16 | 05/10/16 | 05/10/16 | 05/10/16 | |
| **Date Analyzed:** | 05/10/16 | 05/10/16 | 05/10/16 | 05/10/16 | |
| **AA ID No:** | 6D28026-01 | 6D28026-06 | 6D28026-11 | 6D28026-16 | |
| **Client ID No:** | Trip Blank | SB-3-GW | SB-5-GW | SB-9-GW | |
| **Matrix:** | Water | Water | Water | Water | |
| **Dilution Factor:** | 1 | 1 | 1 | 1 | MRL |
| **8260B+OXY+TPHG (EPA 8260B) (continued)** | | | | | |
| 1,4-Dichlorobenzene | <0.50 | <0.50 | <0.50 | <0.50 | 0.50 |
| Dichlorodifluoromethane (R12) | <0.50 | <0.50 | <0.50 | <0.50 | 0.50 |
| 1,1-Dichloroethane | <0.50 | **1.7** | **1.1** | **3.1** | 0.50 |
| 1,2-Dichloroethane (EDC) | <0.50 | <0.50 | <0.50 | <0.50 | 0.50 |
| 1,1-Dichloroethylene | <0.50 | **12** | **6.5** | **16** | 0.50 |
| trans-1,2-Dichloroethylene | <0.50 | <0.50 | <0.50 | <0.50 | 0.50 |
| cis-1,2-Dichloroethylene | <0.50 | **3.7** | **3.4** | **8.0** | 0.50 |
| 1,2-Dichloropropane | <0.50 | <0.50 | <0.50 | <0.50 | 0.50 |
| 2,2-Dichloropropane | <0.50 | <0.50 | <0.50 | <0.50 | 0.50 |
| 1,3-Dichloropropane | <0.50 | <0.50 | <0.50 | <0.50 | 0.50 |
| cis-1,3-Dichloropropylene | <0.50 | <0.50 | <0.50 | <0.50 | 0.50 |
| trans-1,3-Dichloropropylene | <0.50 | <0.50 | <0.50 | <0.50 | 0.50 |
| 1,1-Dichloropropylene | <0.50 | <0.50 | <0.50 | <0.50 | 0.50 |
| Diisopropyl ether (DIPE) | <2.0 | <2.0 | <2.0 | <2.0 | 2.0 |
| Ethylbenzene | <0.50 | <0.50 | <0.50 | <0.50 | 0.50 |
| Ethyl-tert-Butyl Ether (ETBE) | <2.0 | <2.0 | <2.0 | <2.0 | 2.0 |
| Gasoline Range Organics (GRO) | <100 | **240 [1] [2]** | **170 [1] [2]** | **380 [1] [2]** | 100 |
| Hexachlorobutadiene | <1.0 | <1.0 | <1.0 | <1.0 | 1.0 |
| 2-Hexanone (MBK) | <10 | <10 | <10 | <10 | 10 |
| Isopropylbenzene | <0.50 | <0.50 | <0.50 | <0.50 | 0.50 |
| 4-Isopropyltoluene | <1.0 | <1.0 | <1.0 | <1.0 | 1.0 |
| Methyl-tert-Butyl Ether (MTBE) | <2.0 | <2.0 | <2.0 | <2.0 | 2.0 |
| Methylene Chloride | <5.0 | <5.0 | <5.0 | <5.0 | 5.0 |
| 4-Methyl-2-pentanone (MIBK) | <10 | <10 | <10 | <10 | 10 |
| Naphthalene | <2.0 | <2.0 | <2.0 | <2.0 | 2.0 |
| n-Propylbenzene | <0.50 | <0.50 | <0.50 | <0.50 | 0.50 |

**Viorel Vasile**
Operations Manager

# LABORATORY ANALYSIS RESULTS

**Client:** Stantec (TO)
**Project No:** 2057123300
**Project Name:** Grayson Power Plant Glendale Phase II
**Method:** VOCs, OXY & TPH Gasoline by GC/MS

**AA Project No:** A732176
**Date Received:** 04/28/16
**Date Reported:** 05/12/16
**Units:** ug/L

| | | | | | |
|---|---|---|---|---|---|
| **Date Sampled:** | 04/28/16 | 04/28/16 | 04/28/16 | 04/28/16 | |
| **Date Prepared:** | 05/10/16 | 05/10/16 | 05/10/16 | 05/10/16 | |
| **Date Analyzed:** | 05/10/16 | 05/10/16 | 05/10/16 | 05/10/16 | |
| **AA ID No:** | 6D28026-01 | 6D28026-06 | 6D28026-11 | 6D28026-16 | |
| **Client ID No:** | Trip Blank | SB-3-GW | SB-5-GW | SB-9-GW | |
| **Matrix:** | Water | Water | Water | Water | |
| **Dilution Factor:** | 1 | 1 | 1 | 1 | MRL |
| **8260B+OXY+TPHG (EPA 8260B) (continued)** | | | | | |
| Styrene | <0.50 | <0.50 | <0.50 | <0.50 | 0.50 |
| 1,1,1,2-Tetrachloroethane | <0.50 | <0.50 | <0.50 | <0.50 | 0.50 |
| 1,1,2,2-Tetrachloroethane | <0.50 | <0.50 | <0.50 | <0.50 | 0.50 |
| Tetrachloroethylene (PCE) | <0.50 | **12** | **13** | **16** | 0.50 |
| Toluene | <0.50 | <0.50 | <0.50 | <0.50 | 0.50 |
| 1,2,3-Trichlorobenzene | <0.50 | <0.50 | <0.50 | <0.50 | 0.50 |
| 1,2,4-Trichlorobenzene | <0.50 | <0.50 | <0.50 | <0.50 | 0.50 |
| 1,1,1-Trichloroethane | <0.50 | <0.50 | <0.50 | <0.50 | 0.50 |
| 1,1,2-Trichloroethane | <0.50 | <0.50 | <0.50 | <0.50 | 0.50 |
| Trichloroethylene (TCE) | <0.50 | **140** | **100** | **230** | 0.50 |
| Trichlorofluoromethane (R11) | <0.50 | <0.50 | <0.50 | <0.50 | 0.50 |
| 1,2,3-Trichloropropane | <0.50 | <0.50 | <0.50 | <0.50 | 0.50 |
| 1,1,2-Trichloro-1,2,2-trifluoroethane (R113) | <0.50 | <0.50 | <0.50 | <0.50 | 0.50 |
| 1,3,5-Trimethylbenzene | <0.50 | <0.50 | <0.50 | <0.50 | 0.50 |
| 1,2,4-Trimethylbenzene | <0.50 | <0.50 | <0.50 | <0.50 | 0.50 |
| Vinyl chloride | <0.50 | <0.50 | <0.50 | <0.50 | 0.50 |
| o-Xylene | <0.50 | <0.50 | <0.50 | <0.50 | 0.50 |
| m,p-Xylenes | <1.0 | <1.0 | <1.0 | <1.0 | 1.0 |
| **Surrogates** | | | | | **%REC Limits** |
| 4-Bromofluorobenzene | 126% | 132% | 126% | 128% | 70-140 |
| Dibromofluoromethane | 82% | 88% | 82% | 84% | 70-140 |
| Toluene-d8 | 106% | 106% | 104% | 104% | 70-140 |

**Viorel Vasile**
Operations Manager

# LABORATORY ANALYSIS RESULTS

**Client:** Stantec (TO)
**Project No:** 2057123300
**Project Name:** Grayson Power Plant Glendale Phase II
**Method:** Total Metals CAM 17

**AA Project No:** A732176
**Date Received:** 04/28/16
**Date Reported:** 05/12/16
**Units:** mg/L

| | | | | |
|---|---|---|---|---|
| **Date Sampled:** | 04/28/16 | 04/28/16 | 04/28/16 | |
| **Date Prepared:** | 05/03/16 | 05/03/16 | 05/03/16 | |
| **Date Analyzed:** | 05/04/16 | 05/04/16 | 05/04/16 | |
| **AA ID No:** | 6D28026-06 | 6D28026-11 | 6D28026-16 | |
| **Client ID No:** | SB-3-GW | SB-5-GW | SB-9-GW | |
| **Matrix:** | Water | Water | Water | |
| **Dilution Factor:** | 1 | 1 | 1 | MRL |
| **CAM Metals Less Hg 6000/7000 (EPA 6010B/7000)** | | | | |
| Antimony | <0.20 | <0.20 | <0.20 | 0.20 |
| Arsenic | <0.0070 | **0.011** | **0.0070** | 0.0070 |
| Barium | **0.47** | **0.62** | **1.1** | 0.20 |
| Beryllium | <0.020 | <0.020 | <0.020 | 0.020 |
| Cadmium | <0.020 | <0.020 | <0.020 | 0.020 |
| Chromium | **1.1** | **0.58** | **0.62** | 0.050 |
| Cobalt | **0.14** | **0.23** | **0.13** | 0.050 |
| Copper | **0.12** | **0.39** | **0.11** | 0.050 |
| Lead | <0.0050 | <0.0050 | <0.0050 | 0.0050 |
| Molybdenum | <0.050 | <0.050 | <0.050 | 0.050 |
| Nickel | **0.11** | **0.22** | **0.081** | 0.050 |
| Selenium | <0.0050 | <0.0050 | <0.0050 | 0.0050 |
| Silver | <0.020 | <0.020 | <0.020 | 0.020 |
| Thallium | <0.10 | <0.10 | <0.10 | 0.10 |
| Vanadium | **0.22** | **0.76** | <0.20 | 0.20 |
| Zinc | **0.13** | **0.90** | **0.17** | 0.050 |

**Viorel Vasile**
Operations Manager

# LABORATORY ANALYSIS RESULTS

**Client:** Stantec (TO)
**Project No:** 2057123300
**Project Name:** Grayson Power Plant Glendale Phase II
**Method:** VOCs, OXY & TPHG by GC/MS EPA 5035

**AA Project No:** A732176
**Date Received:** 04/28/16
**Date Reported:** 05/12/16
**Units:** mg/kg

| | | | | | |
|---|---|---|---|---|---|
| **Date Sampled:** | 04/28/16 | 04/28/16 | 04/28/16 | 04/28/16 | |
| **Date Prepared:** | 05/04/16 | 05/05/16 | 05/05/16 | 05/05/16 | |
| **Date Analyzed:** | 05/05/16 | 05/05/16 | 05/05/16 | 05/05/16 | |
| **AA ID No:** | 6D28026-04 | 6D28026-05 | 6D28026-09 | 6D28026-10 | |
| **Client ID No:** | SB-3-35 | SB-3-40 | SB-5-20 | SB-5-30 | |
| **Matrix:** | Soil | Soil | Soil | Soil | |
| **Dilution Factor:** | 1 | 1 | 1 | 1 | MRL |
| **8260B/5035 +OXY+TPHG (EPA 8260B/5035)** | | | | | |
| Acetone | <0.050 | <0.050 | <0.050 | <0.050 | 0.050 |
| tert-Amyl Methyl Ether (TAME) | <0.0050 | <0.0050 | <0.0050 | <0.0050 | 0.0050 |
| Benzene | <0.0020 | <0.0020 | <0.0020 | <0.0020 | 0.0020 |
| Bromobenzene | <0.0050 | <0.0050 | <0.0050 | <0.0050 | 0.0050 |
| Bromochloromethane | <0.0050 | <0.0050 | <0.0050 | <0.0050 | 0.0050 |
| Bromodichloromethane | <0.0050 | <0.0050 | <0.0050 | <0.0050 | 0.0050 |
| Bromoform | <0.0050 | <0.0050 | <0.0050 | <0.0050 | 0.0050 |
| Bromomethane | <0.0050 | <0.0050 | <0.0050 | <0.0050 | 0.0050 |
| 2-Butanone (MEK) | <0.050 | <0.050 | <0.050 | <0.050 | 0.050 |
| tert-Butyl alcohol (TBA) | <0.020 | <0.020 | <0.020 | <0.020 | 0.020 |
| sec-Butylbenzene | <0.0050 | <0.0050 | <0.0050 | <0.0050 | 0.0050 |
| tert-Butylbenzene | <0.0050 | <0.0050 | <0.0050 | <0.0050 | 0.0050 |
| n-Butylbenzene | <0.0050 | <0.0050 | <0.0050 | <0.0050 | 0.0050 |
| Carbon Disulfide | <0.0050 | <0.0050 | <0.0050 | <0.0050 | 0.0050 |
| Carbon Tetrachloride | <0.0050 | <0.0050 | <0.0050 | <0.0050 | 0.0050 |
| Chlorobenzene | <0.0050 | <0.0050 | <0.0050 | <0.0050 | 0.0050 |
| Chloroethane | <0.0050 | <0.0050 | <0.0050 | <0.0050 | 0.0050 |
| Chloroform | <0.0050 | <0.0050 | <0.0050 | <0.0050 | 0.0050 |
| Chloromethane | <0.0050 | <0.0050 | <0.0050 | <0.0050 | 0.0050 |
| 2-Chlorotoluene | <0.0050 | <0.0050 | <0.0050 | <0.0050 | 0.0050 |
| 4-Chlorotoluene | <0.0050 | <0.0050 | <0.0050 | <0.0050 | 0.0050 |
| 1,2-Dibromo-3-chloropropane | <0.010 | <0.010 | <0.010 | <0.010 | 0.010 |
| Dibromochloromethane | <0.0050 | <0.0050 | <0.0050 | <0.0050 | 0.0050 |
| 1,2-Dibromoethane (EDB) | <0.0050 | <0.0050 | <0.0050 | <0.0050 | 0.0050 |
| Dibromomethane | <0.0050 | <0.0050 | <0.0050 | <0.0050 | 0.0050 |
| 1,4-Dichlorobenzene | <0.0050 | <0.0050 | <0.0050 | <0.0050 | 0.0050 |
| 1,3-Dichlorobenzene | <0.0050 | <0.0050 | <0.0050 | <0.0050 | 0.0050 |

**Viorel Vasile**
Operations Manager

# LABORATORY ANALYSIS RESULTS

**Client:** Stantec (TO)
**Project No:** 2057123300
**Project Name:** Grayson Power Plant Glendale Phase II
**Method:** VOCs, OXY & TPHG by GC/MS EPA 5035

**AA Project No:** A732176
**Date Received:** 04/28/16
**Date Reported:** 05/12/16
**Units:** mg/kg

| | | | | | |
|---|---|---|---|---|---|
| **Date Sampled:** | 04/28/16 | 04/28/16 | 04/28/16 | 04/28/16 | |
| **Date Prepared:** | 05/04/16 | 05/05/16 | 05/05/16 | 05/05/16 | |
| **Date Analyzed:** | 05/05/16 | 05/05/16 | 05/05/16 | 05/05/16 | |
| **AA ID No:** | 6D28026-04 | 6D28026-05 | 6D28026-09 | 6D28026-10 | |
| **Client ID No:** | SB-3-35 | SB-3-40 | SB-5-20 | SB-5-30 | |
| **Matrix:** | Soil | Soil | Soil | Soil | |
| **Dilution Factor:** | 1 | 1 | 1 | 1 | MRL |
| **8260B/5035 +OXY+TPHG (EPA 8260B/5035) (continued)** | | | | | |
| 1,2-Dichlorobenzene | <0.0050 | <0.0050 | <0.0050 | <0.0050 | 0.0050 |
| Dichlorodifluoromethane (R12) | <0.0050 | <0.0050 | <0.0050 | <0.0050 | 0.0050 |
| 1,1-Dichloroethane | <0.0050 | <0.0050 | <0.0050 | <0.0050 | 0.0050 |
| 1,2-Dichloroethane (EDC) | <0.0050 | <0.0050 | <0.0050 | <0.0050 | 0.0050 |
| trans-1,2-Dichloroethylene | <0.0050 | <0.0050 | <0.0050 | <0.0050 | 0.0050 |
| cis-1,2-Dichloroethylene | <0.0050 | <0.0050 | <0.0050 | <0.0050 | 0.0050 |
| 1,1-Dichloroethylene | <0.0050 | <0.0050 | <0.0050 | <0.0050 | 0.0050 |
| 2,2-Dichloropropane | <0.0050 | <0.0050 | <0.0050 | <0.0050 | 0.0050 |
| 1,3-Dichloropropane | <0.0050 | <0.0050 | <0.0050 | <0.0050 | 0.0050 |
| 1,2-Dichloropropane | <0.0050 | <0.0050 | <0.0050 | <0.0050 | 0.0050 |
| trans-1,3-Dichloropropylene | <0.0050 | <0.0050 | <0.0050 | <0.0050 | 0.0050 |
| 1,1-Dichloropropylene | <0.0050 | <0.0050 | <0.0050 | <0.0050 | 0.0050 |
| cis-1,3-Dichloropropylene | <0.0050 | <0.0050 | <0.0050 | <0.0050 | 0.0050 |
| Diisopropyl ether (DIPE) | <0.0050 | <0.0050 | <0.0050 | <0.0050 | 0.0050 |
| Ethylbenzene | <0.0020 | <0.0020 | <0.0020 | <0.0020 | 0.0020 |
| Ethyl-tert-Butyl Ether (ETBE) | <0.0050 | <0.0050 | <0.0050 | <0.0050 | 0.0050 |
| Gasoline Range Organics (GRO) | <0.50 | <0.50 | <0.50 | <0.50 | 0.50 |
| Hexachlorobutadiene | <0.010 | <0.010 | <0.010 | <0.010 | 0.010 |
| 2-Hexanone (MBK) | <0.050 | <0.050 | <0.050 | <0.050 | 0.050 |
| Isopropylbenzene | <0.0050 | <0.0050 | <0.0050 | <0.0050 | 0.0050 |
| 4-Isopropyltoluene | <0.0050 | <0.0050 | <0.0050 | <0.0050 | 0.0050 |
| Methyl-tert-Butyl Ether (MTBE) | <0.0050 | <0.0050 | <0.0050 | <0.0050 | 0.0050 |
| Methylene Chloride | <0.050 | <0.050 | <0.050 | <0.050 | 0.050 |
| 4-Methyl-2-pentanone (MIBK) | <0.050 | <0.050 | <0.050 | <0.050 | 0.050 |
| Naphthalene | <0.010 | <0.010 | <0.010 | <0.010 | 0.010 |
| n-Propylbenzene | <0.0050 | <0.0050 | <0.0050 | <0.0050 | 0.0050 |

**Viorel Vasile**
Operations Manager

# LABORATORY ANALYSIS RESULTS

**Client:** Stantec (TO)
**Project No:** 2057123300
**Project Name:** Grayson Power Plant Glendale Phase II
**Method:** VOCs, OXY & TPHG by GC/MS EPA 5035

**AA Project No:** A732176
**Date Received:** 04/28/16
**Date Reported:** 05/12/16
**Units:** mg/kg

| | | | | | |
|---|---|---|---|---|---|
| **Date Sampled:** | 04/28/16 | 04/28/16 | 04/28/16 | 04/28/16 | |
| **Date Prepared:** | 05/04/16 | 05/05/16 | 05/05/16 | 05/05/16 | |
| **Date Analyzed:** | 05/05/16 | 05/05/16 | 05/05/16 | 05/05/16 | |
| **AA ID No:** | 6D28026-04 | 6D28026-05 | 6D28026-09 | 6D28026-10 | |
| **Client ID No:** | SB-3-35 | SB-3-40 | SB-5-20 | SB-5-30 | |
| **Matrix:** | Soil | Soil | Soil | Soil | |
| **Dilution Factor:** | 1 | 1 | 1 | 1 | MRL |
| **8260B/5035 +OXY+TPHG (EPA 8260B/5035) (continued)** | | | | | |
| Styrene | <0.0050 | <0.0050 | <0.0050 | <0.0050 | 0.0050 |
| 1,1,1,2-Tetrachloroethane | <0.0050 | <0.0050 | <0.0050 | <0.0050 | 0.0050 |
| 1,1,2,2-Tetrachloroethane | <0.0050 | <0.0050 | <0.0050 | <0.0050 | 0.0050 |
| Tetrachloroethylene (PCE) | <0.0050 | <0.0050 | <0.0050 | <0.0050 | 0.0050 |
| Toluene | <0.0020 | <0.0020 | <0.0020 | <0.0020 | 0.0020 |
| 1,2,4-Trichlorobenzene | <0.0050 | <0.0050 | <0.0050 | <0.0050 | 0.0050 |
| 1,2,3-Trichlorobenzene | <0.0050 | <0.0050 | <0.0050 | <0.0050 | 0.0050 |
| 1,1,2-Trichloroethane | <0.0050 | <0.0050 | <0.0050 | <0.0050 | 0.0050 |
| 1,1,1-Trichloroethane | <0.0050 | <0.0050 | <0.0050 | <0.0050 | 0.0050 |
| Trichloroethylene (TCE) | <0.0050 | <0.0050 | <0.0050 | <0.0050 | 0.0050 |
| Trichlorofluoromethane (R11) | <0.0050 | <0.0050 | <0.0050 | <0.0050 | 0.0050 |
| 1,2,3-Trichloropropane | <0.0050 | <0.0050 | <0.0050 | <0.0050 | 0.0050 |
| 1,1,2-Trichloro-1,2,2-trifluoroethane (R113) | <0.0050 | <0.0050 | <0.0050 | <0.0050 | 0.0050 |
| 1,3,5-Trimethylbenzene | <0.0050 | <0.0050 | <0.0050 | <0.0050 | 0.0050 |
| 1,2,4-Trimethylbenzene | <0.0050 | <0.0050 | <0.0050 | <0.0050 | 0.0050 |
| Vinyl chloride | <0.0050 | <0.0050 | <0.0050 | <0.0050 | 0.0050 |
| o-Xylene | <0.0020 | <0.0020 | <0.0020 | <0.0020 | 0.0020 |
| m,p-Xylenes | <0.0020 | **0.0024** | <0.0020 | <0.0020 | 0.0020 |
| **Surrogates** | | | | | **%REC Limits** |
| 4-Bromofluorobenzene | 108% | 107% | 105% | 102% | 70-140 |
| Dibromofluoromethane | 112% | 117% | 110% | 110% | 70-140 |
| Toluene-d8 | 112% | 104% | 104% | 103% | 70-140 |

**Viorel Vasile**
Operations Manager

# LABORATORY ANALYSIS RESULTS

**Client:** Stantec (TO)
**Project No:** 2057123300
**Project Name:** Grayson Power Plant Glendale Phase II
**Method:** VOCs, OXY & TPHG by GC/MS EPA 5035

**AA Project No:** A732176
**Date Received:** 04/28/16
**Date Reported:** 05/12/16
**Units:** mg/kg

| | | | | | |
|---|---|---|---|---|---|
| **Date Sampled:** | 04/28/16 | 04/28/16 | 04/28/16 | 04/28/16 | |
| **Date Prepared:** | 05/05/16 | 05/05/16 | 05/05/16 | 05/05/16 | |
| **Date Analyzed:** | 05/05/16 | 05/05/16 | 05/05/16 | 05/05/16 | |
| **AA ID No:** | 6D28026-13 | 6D28026-14 | 6D28026-18 | 6D28026-20 | |
| **Client ID No:** | SB-9-5 | SB-9-10 | SB-11-5 | SB-11-35 | |
| **Matrix:** | Soil | Soil | Soil | Soil | |
| **Dilution Factor:** | 1 | 1 | 1 | 1 | MRL |
| **8260B/5035 +OXY+TPHG (EPA 8260B/5035)** | | | | | |
| Acetone | <0.050 | <0.050 | <0.050 | <0.050 | 0.050 |
| tert-Amyl Methyl Ether (TAME) | <0.0050 | <0.0050 | <0.0050 | <0.0050 | 0.0050 |
| Benzene | **0.0040** | **0.0098** | <0.0020 | <0.0020 | 0.0020 |
| Bromobenzene | <0.0050 | <0.0050 | <0.0050 | <0.0050 | 0.0050 |
| Bromochloromethane | <0.0050 | <0.0050 | <0.0050 | <0.0050 | 0.0050 |
| Bromodichloromethane | <0.0050 | <0.0050 | <0.0050 | <0.0050 | 0.0050 |
| Bromoform | <0.0050 | <0.0050 | <0.0050 | <0.0050 | 0.0050 |
| Bromomethane | <0.0050 | <0.0050 | <0.0050 | <0.0050 | 0.0050 |
| 2-Butanone (MEK) | <0.050 | <0.050 | <0.050 | <0.050 | 0.050 |
| tert-Butyl alcohol (TBA) | <0.020 | <0.020 | <0.020 | <0.020 | 0.020 |
| sec-Butylbenzene | <0.0050 | <0.0050 | <0.0050 | <0.0050 | 0.0050 |
| tert-Butylbenzene | <0.0050 | <0.0050 | <0.0050 | <0.0050 | 0.0050 |
| n-Butylbenzene | <0.0050 | <0.0050 | <0.0050 | <0.0050 | 0.0050 |
| Carbon Disulfide | <0.0050 | <0.0050 | <0.0050 | <0.0050 | 0.0050 |
| Carbon Tetrachloride | <0.0050 | <0.0050 | <0.0050 | <0.0050 | 0.0050 |
| Chlorobenzene | <0.0050 | <0.0050 | <0.0050 | <0.0050 | 0.0050 |
| Chloroethane | <0.0050 | <0.0050 | <0.0050 | <0.0050 | 0.0050 |
| Chloroform | <0.0050 | <0.0050 | <0.0050 | <0.0050 | 0.0050 |
| Chloromethane | <0.0050 | <0.0050 | <0.0050 | <0.0050 | 0.0050 |
| 2-Chlorotoluene | <0.0050 | <0.0050 | <0.0050 | <0.0050 | 0.0050 |
| 4-Chlorotoluene | <0.0050 | <0.0050 | <0.0050 | <0.0050 | 0.0050 |
| 1,2-Dibromo-3-chloropropane | <0.010 | <0.010 | <0.010 | <0.010 | 0.010 |
| Dibromochloromethane | <0.0050 | <0.0050 | <0.0050 | <0.0050 | 0.0050 |
| 1,2-Dibromoethane (EDB) | <0.0050 | <0.0050 | <0.0050 | <0.0050 | 0.0050 |
| Dibromomethane | <0.0050 | <0.0050 | <0.0050 | <0.0050 | 0.0050 |
| 1,4-Dichlorobenzene | <0.0050 | <0.0050 | <0.0050 | <0.0050 | 0.0050 |
| 1,3-Dichlorobenzene | <0.0050 | <0.0050 | <0.0050 | <0.0050 | 0.0050 |

**Viorel Vasile**
Operations Manager

# LABORATORY ANALYSIS RESULTS

**Client:** Stantec (TO)
**Project No:** 2057123300
**Project Name:** Grayson Power Plant Glendale Phase II
**Method:** VOCs, OXY & TPHG by GC/MS EPA 5035

**AA Project No:** A732176
**Date Received:** 04/28/16
**Date Reported:** 05/12/16
**Units:** mg/kg

| | | | | | |
|---|---|---|---|---|---|
| **Date Sampled:** | 04/28/16 | 04/28/16 | 04/28/16 | 04/28/16 | |
| **Date Prepared:** | 05/05/16 | 05/05/16 | 05/05/16 | 05/05/16 | |
| **Date Analyzed:** | 05/05/16 | 05/05/16 | 05/05/16 | 05/05/16 | |
| **AA ID No:** | 6D28026-13 | 6D28026-14 | 6D28026-18 | 6D28026-20 | |
| **Client ID No:** | SB-9-5 | SB-9-10 | SB-11-5 | SB-11-35 | |
| **Matrix:** | Soil | Soil | Soil | Soil | |
| **Dilution Factor:** | 1 | 1 | 1 | 1 | MRL |
| **8260B/5035 +OXY+TPHG (EPA 8260B/5035) (continued)** | | | | | |
| 1,2-Dichlorobenzene | <0.0050 | <0.0050 | <0.0050 | <0.0050 | 0.0050 |
| Dichlorodifluoromethane (R12) | <0.0050 | <0.0050 | <0.0050 | <0.0050 | 0.0050 |
| 1,1-Dichloroethane | <0.0050 | <0.0050 | <0.0050 | <0.0050 | 0.0050 |
| 1,2-Dichloroethane (EDC) | <0.0050 | <0.0050 | <0.0050 | <0.0050 | 0.0050 |
| trans-1,2-Dichloroethylene | <0.0050 | <0.0050 | <0.0050 | <0.0050 | 0.0050 |
| cis-1,2-Dichloroethylene | <0.0050 | <0.0050 | <0.0050 | <0.0050 | 0.0050 |
| 1,1-Dichloroethylene | <0.0050 | <0.0050 | <0.0050 | <0.0050 | 0.0050 |
| 2,2-Dichloropropane | <0.0050 | <0.0050 | <0.0050 | <0.0050 | 0.0050 |
| 1,3-Dichloropropane | <0.0050 | <0.0050 | <0.0050 | <0.0050 | 0.0050 |
| 1,2-Dichloropropane | <0.0050 | <0.0050 | <0.0050 | <0.0050 | 0.0050 |
| trans-1,3-Dichloropropylene | <0.0050 | <0.0050 | <0.0050 | <0.0050 | 0.0050 |
| 1,1-Dichloropropylene | <0.0050 | <0.0050 | <0.0050 | <0.0050 | 0.0050 |
| cis-1,3-Dichloropropylene | <0.0050 | <0.0050 | <0.0050 | <0.0050 | 0.0050 |
| Diisopropyl ether (DIPE) | <0.0050 | <0.0050 | <0.0050 | <0.0050 | 0.0050 |
| Ethylbenzene | <0.0020 | <0.0020 | <0.0020 | <0.0020 | 0.0020 |
| Ethyl-tert-Butyl Ether (ETBE) | <0.0050 | <0.0050 | <0.0050 | <0.0050 | 0.0050 |
| Gasoline Range Organics (GRO) | <0.50 | <0.50 | <0.50 | <0.50 | 0.50 |
| Hexachlorobutadiene | <0.010 | <0.010 | <0.010 | <0.010 | 0.010 |
| 2-Hexanone (MBK) | <0.050 | <0.050 | <0.050 | <0.050 | 0.050 |
| Isopropylbenzene | <0.0050 | <0.0050 | <0.0050 | <0.0050 | 0.0050 |
| 4-Isopropyltoluene | <0.0050 | <0.0050 | <0.0050 | <0.0050 | 0.0050 |
| Methyl-tert-Butyl Ether (MTBE) | <0.0050 | <0.0050 | <0.0050 | <0.0050 | 0.0050 |
| Methylene Chloride | <0.050 | <0.050 | <0.050 | <0.050 | 0.050 |
| 4-Methyl-2-pentanone (MIBK) | <0.050 | <0.050 | <0.050 | <0.050 | 0.050 |
| Naphthalene | <0.010 | <0.010 | <0.010 | <0.010 | 0.010 |
| n-Propylbenzene | <0.0050 | <0.0050 | <0.0050 | <0.0050 | 0.0050 |

**Viorel Vasile**
Operations Manager

# LABORATORY ANALYSIS RESULTS

**Client:** Stantec (TO)
**Project No:** 2057123300
**Project Name:** Grayson Power Plant Glendale Phase II
**Method:** VOCs, OXY & TPHG by GC/MS EPA 5035

**AA Project No:** A732176
**Date Received:** 04/28/16
**Date Reported:** 05/12/16
**Units:** mg/kg

| | | | | | |
|---|---|---|---|---|---|
| **Date Sampled:** | 04/28/16 | 04/28/16 | 04/28/16 | 04/28/16 | |
| **Date Prepared:** | 05/05/16 | 05/05/16 | 05/05/16 | 05/05/16 | |
| **Date Analyzed:** | 05/05/16 | 05/05/16 | 05/05/16 | 05/05/16 | |
| **AA ID No:** | 6D28026-13 | 6D28026-14 | 6D28026-18 | 6D28026-20 | |
| **Client ID No:** | SB-9-5 | SB-9-10 | SB-11-5 | SB-11-35 | |
| **Matrix:** | Soil | Soil | Soil | Soil | |
| **Dilution Factor:** | 1 | 1 | 1 | 1 | MRL |
| **8260B/5035 +OXY+TPHG (EPA 8260B/5035) (continued)** | | | | | |
| Styrene | <0.0050 | <0.0050 | <0.0050 | <0.0050 | 0.0050 |
| 1,1,1,2-Tetrachloroethane | <0.0050 | <0.0050 | <0.0050 | <0.0050 | 0.0050 |
| 1,1,2,2-Tetrachloroethane | <0.0050 | <0.0050 | <0.0050 | <0.0050 | 0.0050 |
| Tetrachloroethylene (PCE) | <0.0050 | <0.0050 | <0.0050 | <0.0050 | 0.0050 |
| Toluene | **0.0021** | **0.0067** | <0.0020 | <0.0020 | 0.0020 |
| 1,2,4-Trichlorobenzene | <0.0050 | <0.0050 | <0.0050 | <0.0050 | 0.0050 |
| 1,2,3-Trichlorobenzene | <0.0050 | <0.0050 | <0.0050 | <0.0050 | 0.0050 |
| 1,1,2-Trichloroethane | <0.0050 | <0.0050 | <0.0050 | <0.0050 | 0.0050 |
| 1,1,1-Trichloroethane | <0.0050 | <0.0050 | <0.0050 | <0.0050 | 0.0050 |
| Trichloroethylene (TCE) | **0.0064** | **0.0052** | <0.0050 | <0.0050 | 0.0050 |
| Trichlorofluoromethane (R11) | <0.0050 | <0.0050 | <0.0050 | <0.0050 | 0.0050 |
| 1,2,3-Trichloropropane | <0.0050 | <0.0050 | <0.0050 | <0.0050 | 0.0050 |
| 1,1,2-Trichloro-1,2,2-trifluoroethane (R113) | <0.0050 | <0.0050 | <0.0050 | <0.0050 | 0.0050 |
| 1,3,5-Trimethylbenzene | <0.0050 | <0.0050 | <0.0050 | <0.0050 | 0.0050 |
| 1,2,4-Trimethylbenzene | <0.0050 | <0.0050 | <0.0050 | <0.0050 | 0.0050 |
| Vinyl chloride | <0.0050 | <0.0050 | <0.0050 | <0.0050 | 0.0050 |
| o-Xylene | <0.0020 | <0.0020 | <0.0020 | <0.0020 | 0.0020 |
| m,p-Xylenes | <0.0020 | **0.0030** | <0.0020 | <0.0020 | 0.0020 |
| **Surrogates** | | | | | **%REC Limits** |
| 4-Bromofluorobenzene | 117% | 119% | 107% | 108% | 70-140 |
| Dibromofluoromethane | 115% | 116% | 117% | 115% | 70-140 |
| Toluene-d8 | 114% | 114% | 101% | 105% | 70-140 |

**Viorel Vasile**
Operations Manager

# LABORATORY ANALYSIS RESULTS

**Client:** Stantec (TO)
**Project No:** 2057123300
**Project Name:** Grayson Power Plant Glendale Phase II

**AA Project No:** A732176
**Date Received:** 04/28/16
**Date Reported:** 05/12/16

| Analyte | Result | Reporting Limit | Units | Spike Level | Source Result | %REC | %REC Limits | RPD | RPD Limit | Notes |
|---|---|---|---|---|---|---|---|---|---|---|
| **Cations by Ion Chromatography - Quality Control** | | | | | | | | | | |
| *Batch B6D2849 - NO PREP* | | | | | | | | | | |
| **Blank (B6D2849-BLK1)** | | | | Prepared: 04/28/16 Analyzed: 05/06/16 | | | | | | |
| Chromium (VI) | <0.30 | 0.30 | ug/L | | | | | | | |
| **LCS (B6D2849-BS1)** | | | | Prepared & Analyzed: 04/28/16 | | | | | | |
| Chromium (VI) | **2.22** | 0.30 | ug/L | 2.0 | | 111 | 80-120 | | 20 | |
| **LCS Dup (B6D2849-BSD1)** | | | | Prepared & Analyzed: 04/28/16 | | | | | | |
| Chromium (VI) | **2.36** | 0.30 | ug/L | 2.0 | | 118 | 80-120 | 6.24 | 20 | |
| **Duplicate (B6D2849-DUP1)** | | **Source: 6D28026-11** | | Prepared & Analyzed: 04/28/16 | | | | | | |
| Chromium (VI) | **<0.30** | 0.30 | ug/L | | <0.30 | | | | 30 | |
| **Matrix Spike (B6D2849-MS1)** | | **Source: 6D28026-06** | | Prepared & Analyzed: 04/28/16 | | | | | | |
| Chromium (VI) | **1.80** | 0.30 | ug/L | 2.0 | <0.30 | 90.2 | 70-130 | | 20 | |
| **Matrix Spike Dup (B6D2849-MSD1)** | | **Source: 6D28026-06** | | Prepared & Analyzed: 04/28/16 | | | | | | |
| Chromium (VI) | **1.92** | 0.30 | ug/L | 2.0 | <0.30 | 95.8 | 70-130 | 6.07 | 20 | |
| *Batch B6E0428 - NO PREP* | | | | | | | | | | |
| **Blank (B6E0428-BLK1)** | | | | Prepared & Analyzed: 05/05/16 | | | | | | |
| Chromium (VI) | <0.040 | 0.040 | mg/kg | | | | | | | |
| **LCS (B6E0428-BS1)** | | | | Prepared & Analyzed: 05/05/16 | | | | | | |
| Chromium (VI) | **0.227** | 0.040 | mg/kg | 0.20 | | 113 | 80-120 | | | |
| **LCS Dup (B6E0428-BSD1)** | | | | Prepared & Analyzed: 05/05/16 | | | | | | |
| Chromium (VI) | **0.220** | 0.040 | mg/kg | 0.20 | | 110 | 80-120 | 2.95 | 20 | |
| **Duplicate (B6E0428-DUP1)** | | **Source: 6D28026-18** | | Prepared & Analyzed: 05/05/16 | | | | | | |
| Chromium (VI) | **<0.040** | 0.040 | mg/kg | | <0.040 | | | | 40 | |
| **Matrix Spike (B6E0428-MS1)** | | **Source: 6D29007-06** | | Prepared & Analyzed: 05/05/16 | | | | | | |
| Chromium (VI) | **0.228** | 0.040 | mg/kg | 0.20 | | 114 | 70-130 | | | |
| **Matrix Spike Dup (B6E0428-MSD1)** | | **Source: 6D29007-06** | | Prepared & Analyzed: 05/05/16 | | | | | | |
| Chromium (VI) | **0.225** | 0.040 | mg/kg | 0.20 | | 113 | 70-130 | 1.10 | 40 | |
| **VOCs, OXY & TPH Gasoline by GC/MS - Quality Control** | | | | | | | | | | |
| *Batch B6E1022 - EPA 5030B* | | | | | | | | | | |
| **Blank (B6E1022-BLK1)** | | | | Prepared & Analyzed: 05/10/16 | | | | | | |
| Acetone | <10 | 10 | ug/L | | | | | | | |
| tert-Amyl Methyl Ether (TAME) | <2.0 | 2.0 | ug/L | | | | | | | |

**Viorel Vasile**
Operations Manager

# LABORATORY ANALYSIS RESULTS

**Client:** Stantec (TO)
**Project No:** 2057123300
**Project Name:** Grayson Power Plant Glendale Phase II

**AA Project No:** A732176
**Date Received:** 04/28/16
**Date Reported:** 05/12/16

| Analyte | Result | Reporting Limit | Units | Spike Level | Source Result | %REC | %REC Limits | RPD | RPD Limit | Notes |
|---|---|---|---|---|---|---|---|---|---|---|
| **VOCs, OXY & TPH Gasoline by GC/MS - Quality Control** | | | | | | | | | | |
| *Batch B6E1022 - EPA 5030B* | | | | | | | | | | |
| **Blank (B6E1022-BLK1) Continued** | | | | Prepared & Analyzed: 05/10/16 | | | | | | |
| Benzene | <0.50 | 0.50 | ug/L | | | | | | | |
| Bromobenzene | <0.50 | 0.50 | ug/L | | | | | | | |
| Bromochloromethane | <0.50 | 0.50 | ug/L | | | | | | | |
| Bromodichloromethane | <0.50 | 0.50 | ug/L | | | | | | | |
| Bromoform | <0.50 | 0.50 | ug/L | | | | | | | |
| Bromomethane | <0.50 | 0.50 | ug/L | | | | | | | |
| 2-Butanone (MEK) | <10 | 10 | ug/L | | | | | | | |
| tert-Butyl alcohol (TBA) | <10 | 10 | ug/L | | | | | | | |
| sec-Butylbenzene | <0.50 | 0.50 | ug/L | | | | | | | |
| tert-Butylbenzene | <0.50 | 0.50 | ug/L | | | | | | | |
| n-Butylbenzene | <0.50 | 0.50 | ug/L | | | | | | | |
| Carbon Disulfide | <0.50 | 0.50 | ug/L | | | | | | | |
| Carbon Tetrachloride | <0.50 | 0.50 | ug/L | | | | | | | |
| Chlorobenzene | <0.50 | 0.50 | ug/L | | | | | | | |
| Chloroethane | <0.50 | 0.50 | ug/L | | | | | | | |
| Chloroform | <0.50 | 0.50 | ug/L | | | | | | | |
| Chloromethane | <0.50 | 0.50 | ug/L | | | | | | | |
| 2-Chlorotoluene | <0.50 | 0.50 | ug/L | | | | | | | |
| 4-Chlorotoluene | <0.50 | 0.50 | ug/L | | | | | | | |
| 1,2-Dibromo-3-chloropropane | <1.0 | 1.0 | ug/L | | | | | | | |
| Dibromochloromethane | <0.50 | 0.50 | ug/L | | | | | | | |
| 1,2-Dibromoethane (EDB) | <0.50 | 0.50 | ug/L | | | | | | | |
| Dibromomethane | <0.50 | 0.50 | ug/L | | | | | | | |
| 1,3-Dichlorobenzene | <0.50 | 0.50 | ug/L | | | | | | | |
| 1,2-Dichlorobenzene | <0.50 | 0.50 | ug/L | | | | | | | |
| 1,4-Dichlorobenzene | <0.50 | 0.50 | ug/L | | | | | | | |
| Dichlorodifluoromethane (R12) | <0.50 | 0.50 | ug/L | | | | | | | |
| 1,1-Dichloroethane | <0.50 | 0.50 | ug/L | | | | | | | |
| 1,2-Dichloroethane (EDC) | <0.50 | 0.50 | ug/L | | | | | | | |
| 1,1-Dichloroethylene | <0.50 | 0.50 | ug/L | | | | | | | |
| trans-1,2-Dichloroethylene | <0.50 | 0.50 | ug/L | | | | | | | |

**Viorel Vasile**
Operations Manager

# LABORATORY ANALYSIS RESULTS

**Client:** Stantec (TO)
**Project No:** 2057123300
**Project Name:** Grayson Power Plant Glendale Phase II

**AA Project No:** A732176
**Date Received:** 04/28/16
**Date Reported:** 05/12/16

| Analyte | Result | Reporting Limit | Units | Spike Level | Source Result | %REC | %REC Limits | RPD | RPD Limit | Notes |
|---|---|---|---|---|---|---|---|---|---|---|
| **VOCs, OXY & TPH Gasoline by GC/MS - Quality Control** | | | | | | | | | | |
| *Batch B6E1022 - EPA 5030B* | | | | | | | | | | |
| **Blank (B6E1022-BLK1) Continued** | | | | Prepared & Analyzed: 05/10/16 | | | | | | |
| cis-1,2-Dichloroethylene | <0.50 | 0.50 | ug/L | | | | | | | |
| 1,2-Dichloropropane | <0.50 | 0.50 | ug/L | | | | | | | |
| 2,2-Dichloropropane | <0.50 | 0.50 | ug/L | | | | | | | |
| 1,3-Dichloropropane | <0.50 | 0.50 | ug/L | | | | | | | |
| cis-1,3-Dichloropropylene | <0.50 | 0.50 | ug/L | | | | | | | |
| trans-1,3-Dichloropropylene | <0.50 | 0.50 | ug/L | | | | | | | |
| 1,1-Dichloropropylene | <0.50 | 0.50 | ug/L | | | | | | | |
| Diisopropyl ether (DIPE) | <2.0 | 2.0 | ug/L | | | | | | | |
| Ethylbenzene | <0.50 | 0.50 | ug/L | | | | | | | |
| Ethyl-tert-Butyl Ether (ETBE) | <2.0 | 2.0 | ug/L | | | | | | | |
| Gasoline Range Organics (GRO) | <100 | 100 | ug/L | | | | | | | |
| Hexachlorobutadiene | <1.0 | 1.0 | ug/L | | | | | | | |
| 2-Hexanone (MBK) | <10 | 10 | ug/L | | | | | | | |
| Isopropylbenzene | <0.50 | 0.50 | ug/L | | | | | | | |
| 4-Isopropyltoluene | <1.0 | 1.0 | ug/L | | | | | | | |
| Methyl-tert-Butyl Ether (MTBE) | <2.0 | 2.0 | ug/L | | | | | | | |
| Methylene Chloride | <5.0 | 5.0 | ug/L | | | | | | | |
| 4-Methyl-2-pentanone (MIBK) | <10 | 10 | ug/L | | | | | | | |
| Naphthalene | <2.0 | 2.0 | ug/L | | | | | | | |
| n-Propylbenzene | <0.50 | 0.50 | ug/L | | | | | | | |
| Styrene | <0.50 | 0.50 | ug/L | | | | | | | |
| 1,1,1,2-Tetrachloroethane | <0.50 | 0.50 | ug/L | | | | | | | |
| 1,1,2,2-Tetrachloroethane | <0.50 | 0.50 | ug/L | | | | | | | |
| Tetrachloroethylene (PCE) | <0.50 | 0.50 | ug/L | | | | | | | |
| Toluene | <0.50 | 0.50 | ug/L | | | | | | | |
| 1,2,3-Trichlorobenzene | <0.50 | 0.50 | ug/L | | | | | | | |
| 1,2,4-Trichlorobenzene | <0.50 | 0.50 | ug/L | | | | | | | |
| 1,1,1-Trichloroethane | <0.50 | 0.50 | ug/L | | | | | | | |
| 1,1,2-Trichloroethane | <0.50 | 0.50 | ug/L | | | | | | | |
| Trichloroethylene (TCE) | <0.50 | 0.50 | ug/L | | | | | | | |
| Trichlorofluoromethane (R11) | <0.50 | 0.50 | ug/L | | | | | | | |

**Viorel Vasile**
Operations Manager

# LABORATORY ANALYSIS RESULTS

**Client:** Stantec (TO)
**Project No:** 2057123300
**Project Name:** Grayson Power Plant Glendale Phase II

**AA Project No:** A732176
**Date Received:** 04/28/16
**Date Reported:** 05/12/16

| Analyte | Result | Reporting Limit | Units | Spike Level | Source Result | %REC | %REC Limits | RPD | RPD Limit | Notes |
|---|---|---|---|---|---|---|---|---|---|---|
| **VOCs, OXY & TPH Gasoline by GC/MS - Quality Control** | | | | | | | | | | |
| *Batch B6E1022 - EPA 5030B* | | | | | | | | | | |
| **Blank (B6E1022-BLK1) Continued** | | | | Prepared & Analyzed: 05/10/16 | | | | | | |
| 1,2,3-Trichloropropane | <0.50 | 0.50 | ug/L | | | | | | | |
| 1,1,2-Trichloro-1,2,2-trifluoroethane (R113) | <0.50 | 0.50 | ug/L | | | | | | | |
| 1,3,5-Trimethylbenzene | <0.50 | 0.50 | ug/L | | | | | | | |
| 1,2,4-Trimethylbenzene | <0.50 | 0.50 | ug/L | | | | | | | |
| Vinyl chloride | <0.50 | 0.50 | ug/L | | | | | | | |
| o-Xylene | <0.50 | 0.50 | ug/L | | | | | | | |
| m,p-Xylenes | <1.0 | 1.0 | ug/L | | | | | | | |
| *Surrogate: 4-Bromofluorobenzene* | *62.6* | | *ug/L* | *50* | | *125* | *70-140* | | | |
| *Surrogate: Dibromofluoromethane* | *42.5* | | *ug/L* | *50* | | *84.9* | *70-140* | | | |
| *Surrogate: Toluene-d8* | *53.3* | | *ug/L* | *50* | | *107* | *70-140* | | | |
| **LCS (B6E1022-BS1)** | | | | Prepared: 05/10/16 Analyzed: 05/11/16 | | | | | | |
| Acetone | **53.3** | 10 | ug/L | 50 | | 107 | 70-130 | | | |
| tert-Amyl Methyl Ether (TAME) | **21.5** | 2.0 | ug/L | 20 | | 108 | 70-130 | | | |
| Benzene | **21.6** | 0.50 | ug/L | 20 | | 108 | 75-125 | | | |
| Bromobenzene | **24.6** | 0.50 | ug/L | 20 | | 123 | 70-130 | | | |
| Bromochloromethane | **19.3** | 0.50 | ug/L | 20 | | 96.5 | 70-130 | | | |
| Bromodichloromethane | **22.6** | 0.50 | ug/L | 20 | | 113 | 75-125 | | | |
| Bromoform | **18.8** | 0.50 | ug/L | 20 | | 93.8 | 75-125 | | | |
| Bromomethane | **21.5** | 0.50 | ug/L | 20 | | 107 | 75-125 | | | |
| 2-Butanone (MEK) | **52.1** | 10 | ug/L | 50 | | 104 | 70-130 | | | |
| tert-Butyl alcohol (TBA) | **112** | 10 | ug/L | 100 | | 112 | 70-130 | | | |
| sec-Butylbenzene | **23.6** | 0.50 | ug/L | 20 | | 118 | 70-130 | | | |
| tert-Butylbenzene | **22.4** | 0.50 | ug/L | 20 | | 112 | 70-130 | | | |
| n-Butylbenzene | **21.1** | 0.50 | ug/L | 20 | | 105 | 70-130 | | | |
| Carbon Disulfide | **38.8** | 0.50 | ug/L | 50 | | 77.6 | 70-130 | | | |
| Carbon Tetrachloride | **24.6** | 0.50 | ug/L | 20 | | 123 | 75-125 | | | |
| Chlorobenzene | **18.8** | 0.50 | ug/L | 20 | | 93.8 | 75-125 | | | |
| Chloroethane | **17.3** | 0.50 | ug/L | 20 | | 86.6 | 75-125 | | | |
| Chloroform | **18.4** | 0.50 | ug/L | 20 | | 92.0 | 75-125 | | | |
| Chloromethane | **20.1** | 0.50 | ug/L | 20 | | 101 | 65-125 | | | |

**Viorel Vasile**
Operations Manager

# LABORATORY ANALYSIS RESULTS

**Client:** Stantec (TO)
**Project No:** 2057123300
**Project Name:** Grayson Power Plant Glendale Phase II

**AA Project No:** A732176
**Date Received:** 04/28/16
**Date Reported:** 05/12/16

## VOCs, OXY & TPH Gasoline by GC/MS - Quality Control

*Batch B6E1022 - EPA 5030B*

**LCS (B6E1022-BS1) Continued** Prepared: 05/10/16 Analyzed: 05/11/16

| Analyte | Result | Reporting Limit | Units | Spike Level | Source Result | %REC | %REC Limits | RPD | RPD Limit | Notes |
|---|---|---|---|---|---|---|---|---|---|---|
| 2-Chlorotoluene | **23.7** | 0.50 | ug/L | 20 | | 118 | 70-130 | | | |
| 4-Chlorotoluene | **21.3** | 0.50 | ug/L | 20 | | 106 | 70-130 | | | |
| 1,2-Dibromo-3-chloropropane | **19.2** | 1.0 | ug/L | 20 | | 95.9 | 70-130 | | | |
| Dibromochloromethane | **20.3** | 0.50 | ug/L | 20 | | 101 | 75-125 | | | |
| 1,2-Dibromoethane (EDB) | **18.9** | 0.50 | ug/L | 20 | | 94.4 | 70-130 | | | |
| Dibromomethane | **19.5** | 0.50 | ug/L | 20 | | 97.4 | 70-130 | | | |
| 1,3-Dichlorobenzene | **16.7** | 0.50 | ug/L | 20 | | 83.6 | 70-130 | | | |
| 1,2-Dichlorobenzene | **17.7** | 0.50 | ug/L | 20 | | 88.7 | 70-130 | | | |
| 1,4-Dichlorobenzene | **17.5** | 0.50 | ug/L | 20 | | 87.4 | 75-125 | | | |
| Dichlorodifluoromethane (R12) | **18.7** | 0.50 | ug/L | 20 | | 93.4 | 70-130 | | | |
| 1,1-Dichloroethane | **16.7** | 0.50 | ug/L | 20 | | 83.6 | 70-125 | | | |
| 1,2-Dichloroethane (EDC) | **20.7** | 0.50 | ug/L | 20 | | 104 | 75-125 | | | |
| 1,1-Dichloroethylene | **16.6** | 0.50 | ug/L | 20 | | 82.8 | 70-130 | | | |
| trans-1,2-Dichloroethylene | **17.9** | 0.50 | ug/L | 20 | | 89.7 | 75-125 | | | |
| cis-1,2-Dichloroethylene | **18.5** | 0.50 | ug/L | 20 | | 92.7 | 75-125 | | | |
| 1,2-Dichloropropane | **21.4** | 0.50 | ug/L | 20 | | 107 | 75-130 | | | |
| 2,2-Dichloropropane | **21.2** | 0.50 | ug/L | 20 | | 106 | 70-130 | | | |
| 1,3-Dichloropropane | **19.9** | 0.50 | ug/L | 20 | | 99.4 | 70-130 | | | |
| cis-1,3-Dichloropropylene | **18.3** | 0.50 | ug/L | 20 | | 91.5 | 75-125 | | | |
| trans-1,3-Dichloropropylene | **16.3** | 0.50 | ug/L | 20 | | 81.4 | 70-130 | | | |
| 1,1-Dichloropropylene | **21.1** | 0.50 | ug/L | 20 | | 106 | 70-130 | | | |
| Diisopropyl ether (DIPE) | **20.4** | 2.0 | ug/L | 20 | | 102 | 70-130 | | | |
| Ethylbenzene | **20.2** | 0.50 | ug/L | 20 | | 101 | 75-125 | | | |
| Ethyl-tert-Butyl Ether (ETBE) | **21.2** | 2.0 | ug/L | 20 | | 106 | 70-130 | | | |
| Gasoline Range Organics (GRO) | **592** | 100 | ug/L | 500 | | 118 | 70-130 | | | |
| Hexachlorobutadiene | **20.6** | 1.0 | ug/L | 20 | | 103 | 70-130 | | | |
| 2-Hexanone (MBK) | **57.1** | 10 | ug/L | 50 | | 114 | 70-130 | | | |
| Isopropylbenzene | **24.3** | 0.50 | ug/L | 20 | | 121 | 70-130 | | | |
| 4-Isopropyltoluene | **22.4** | 1.0 | ug/L | 20 | | 112 | 70-130 | | | |
| Methyl-tert-Butyl Ether (MTBE) | **33.6** | 2.0 | ug/L | 40 | | 84.1 | 75-125 | | | |
| Methylene Chloride | **19.9** | 5.0 | ug/L | 20 | | 99.6 | 75-130 | | | |

**Viorel Vasile**
Operations Manager

# LABORATORY ANALYSIS RESULTS

**Client:** Stantec (TO)
**Project No:** 2057123300
**Project Name:** Grayson Power Plant Glendale Phase II

**AA Project No:** A732176
**Date Received:** 04/28/16
**Date Reported:** 05/12/16

| Analyte | Result | Reporting Limit | Units | Spike Level | Source Result | %REC | %REC Limits | RPD | RPD Limit | Notes |
|---|---|---|---|---|---|---|---|---|---|---|
| **VOCs, OXY & TPH Gasoline by GC/MS - Quality Control** | | | | | | | | | | |
| *Batch B6E1022 - EPA 5030B* | | | | | | | | | | |
| **LCS (B6E1022-BS1) Continued** | | | | Prepared: 05/10/16 Analyzed: 05/11/16 | | | | | | |
| 4-Methyl-2-pentanone (MIBK) | **48.8** | 10 | ug/L | 50 | | 97.6 | 70-130 | | | |
| Naphthalene | **17.6** | 2.0 | ug/L | 20 | | 88.2 | 70-130 | | | |
| n-Propylbenzene | **23.4** | 0.50 | ug/L | 20 | | 117 | 70-130 | | | |
| Styrene | **18.0** | 0.50 | ug/L | 20 | | 90.1 | 70-130 | | | |
| 1,1,1,2-Tetrachloroethane | **20.4** | 0.50 | ug/L | 20 | | 102 | 70-130 | | | |
| 1,1,2,2-Tetrachloroethane | **16.2** | 0.50 | ug/L | 20 | | 80.9 | 70-135 | | | |
| Tetrachloroethylene (PCE) | **21.2** | 0.50 | ug/L | 20 | | 106 | 75-125 | | | |
| Toluene | **20.2** | 0.50 | ug/L | 20 | | 101 | 75-125 | | | |
| 1,2,3-Trichlorobenzene | **17.9** | 0.50 | ug/L | 20 | | 89.6 | 70-130 | | | |
| 1,2,4-Trichlorobenzene | **17.7** | 0.50 | ug/L | 20 | | 88.3 | 70-130 | | | |
| 1,1,1-Trichloroethane | **24.1** | 0.50 | ug/L | 20 | | 120 | 75-125 | | | |
| 1,1,2-Trichloroethane | **19.9** | 0.50 | ug/L | 20 | | 99.6 | 75-125 | | | |
| Trichloroethylene (TCE) | **22.6** | 0.50 | ug/L | 20 | | 113 | 75-125 | | | |
| Trichlorofluoromethane (R11) | **17.6** | 0.50 | ug/L | 20 | | 88.0 | 70-130 | | | |
| 1,2,3-Trichloropropane | **17.1** | 0.50 | ug/L | 20 | | 85.6 | 70-130 | | | |
| 1,1,2-Trichloro-1,2,2-trifluoroethane (R113) | **40.7** | 0.50 | ug/L | 40 | | 102 | 70-130 | | | |
| 1,3,5-Trimethylbenzene | **23.9** | 0.50 | ug/L | 20 | | 120 | 70-130 | | | |
| 1,2,4-Trimethylbenzene | **21.4** | 0.50 | ug/L | 20 | | 107 | 70-130 | | | |
| Vinyl chloride | **21.3** | 0.50 | ug/L | 20 | | 106 | 75-125 | | | |
| o-Xylene | **17.8** | 0.50 | ug/L | 20 | | 88.8 | 75-125 | | | |
| m,p-Xylenes | **37.3** | 1.0 | ug/L | 40 | | 93.2 | 70-130 | | | |
| *Surrogate: 4-Bromofluorobenzene* | *63.8* | | *ug/L* | *50* | | *128* | *70-140* | | | |
| *Surrogate: Dibromofluoromethane* | *45.3* | | *ug/L* | *50* | | *90.7* | *70-140* | | | |
| *Surrogate: Toluene-d8* | *51.9* | | *ug/L* | *50* | | *104* | *70-140* | | | |
| **Matrix Spike (B6E1022-MS1)** | | | | **Source: 6D29003-01** Prepared & Analyzed: 05/10/16 | | | | | | |
| Acetone | **50.0** | 10 | ug/L | 50 | | 100 | 70-130 | | | |
| tert-Amyl Methyl Ether (TAME) | **24.6** | 2.0 | ug/L | 20 | | 123 | 70-130 | | | |
| Benzene | **19.3** | 0.50 | ug/L | 20 | | 96.3 | 70-130 | | | |
| Bromobenzene | **21.8** | 0.50 | ug/L | 20 | | 109 | 70-130 | | | |
| Bromochloromethane | **19.6** | 0.50 | ug/L | 20 | | 98.2 | 70-130 | | | |

**Viorel Vasile**
Operations Manager

# LABORATORY ANALYSIS RESULTS

**Client:** Stantec (TO)
**Project No:** 2057123300
**Project Name:** Grayson Power Plant Glendale Phase II

**AA Project No:** A732176
**Date Received:** 04/28/16
**Date Reported:** 05/12/16

| Analyte | Result | Reporting Limit | Units | Spike Level | Source Result | %REC | %REC Limits | RPD | RPD Limit | Notes |
|---|---|---|---|---|---|---|---|---|---|---|
| **VOCs, OXY & TPH Gasoline by GC/MS - Quality Control** | | | | | | | | | | |
| *Batch B6E1022 - EPA 5030B* | | | | | | | | | | |
| **Matrix Spike (B6E1022-MS1) Continued Source: 6D29003-01** Prepared & Analyzed: 05/10/16 | | | | | | | | | | |
| Bromodichloromethane | **20.2** | 0.50 | ug/L | 20 | | 101 | 70-130 | | | |
| Bromoform | **23.4** | 0.50 | ug/L | 20 | | 117 | 70-130 | | | |
| Bromomethane | **21.1** | 0.50 | ug/L | 20 | | 106 | 70-130 | | | |
| 2-Butanone (MEK) | **56.5** | 10 | ug/L | 50 | | 113 | 70-130 | | | |
| tert-Butyl alcohol (TBA) | **120** | 10 | ug/L | 100 | | 120 | 70-130 | | | |
| sec-Butylbenzene | **19.7** | 0.50 | ug/L | 20 | | 98.4 | 70-130 | | | |
| tert-Butylbenzene | **20.2** | 0.50 | ug/L | 20 | | 101 | 70-130 | | | |
| n-Butylbenzene | **19.5** | 0.50 | ug/L | 20 | | 97.6 | 70-130 | | | |
| Carbon Disulfide | **36.8** | 0.50 | ug/L | 50 | | 73.6 | 70-130 | | | |
| Carbon Tetrachloride | **19.6** | 0.50 | ug/L | 20 | | 98.0 | 70-130 | | | |
| Chlorobenzene | **19.3** | 0.50 | ug/L | 20 | | 96.6 | 70-130 | | | |
| Chloroethane | **17.2** | 0.50 | ug/L | 20 | | 85.8 | 70-130 | | | |
| Chloroform | **20.4** | 0.50 | ug/L | 20 | | 102 | 70-130 | | | |
| Chloromethane | **17.9** | 0.50 | ug/L | 20 | | 89.6 | 70-130 | | | |
| 2-Chlorotoluene | **19.4** | 0.50 | ug/L | 20 | | 96.8 | 70-130 | | | |
| 4-Chlorotoluene | **19.7** | 0.50 | ug/L | 20 | | 98.7 | 70-130 | | | |
| 1,2-Dibromo-3-chloropropane | **22.8** | 1.0 | ug/L | 20 | | 114 | 70-130 | | | |
| Dibromochloromethane | **23.6** | 0.50 | ug/L | 20 | | 118 | 70-130 | | | |
| 1,2-Dibromoethane (EDB) | **22.6** | 0.50 | ug/L | 20 | | 113 | 70-130 | | | |
| Dibromomethane | **20.2** | 0.50 | ug/L | 20 | | 101 | 70-130 | | | |
| 1,3-Dichlorobenzene | **18.9** | 0.50 | ug/L | 20 | | 94.7 | 70-130 | | | |
| 1,2-Dichlorobenzene | **19.4** | 0.50 | ug/L | 20 | | 97.0 | 70-130 | | | |
| 1,4-Dichlorobenzene | **20.3** | 0.50 | ug/L | 20 | | 102 | 70-130 | | | |
| Dichlorodifluoromethane (R12) | **17.6** | 0.50 | ug/L | 20 | | 88.2 | 70-130 | | | |
| 1,1-Dichloroethane | **18.5** | 0.50 | ug/L | 20 | | 92.7 | 70-130 | | | |
| 1,2-Dichloroethane (EDC) | **20.4** | 0.50 | ug/L | 20 | | 102 | 70-130 | | | |
| 1,1-Dichloroethylene | **17.2** | 0.50 | ug/L | 20 | | 86.0 | 70-130 | | | |
| trans-1,2-Dichloroethylene | **16.2** | 0.50 | ug/L | 20 | | 81.1 | 70-130 | | | |
| cis-1,2-Dichloroethylene | **17.0** | 0.50 | ug/L | 20 | | 84.8 | 70-130 | | | |
| 1,2-Dichloropropane | **20.8** | 0.50 | ug/L | 20 | | 104 | 70-130 | | | |
| 2,2-Dichloropropane | **18.3** | 0.50 | ug/L | 20 | | 91.4 | 70-130 | | | |

**Viorel Vasile**
Operations Manager

# LABORATORY ANALYSIS RESULTS

**Client:** Stantec (TO)
**Project No:** 2057123300
**Project Name:** Grayson Power Plant Glendale Phase II

**AA Project No:** A732176
**Date Received:** 04/28/16
**Date Reported:** 05/12/16

| Analyte | Result | Reporting Limit | Units | Spike Level | Source Result | %REC | %REC Limits | RPD | RPD Limit | Notes |
|---|---|---|---|---|---|---|---|---|---|---|
| **VOCs, OXY & TPH Gasoline by GC/MS - Quality Control** | | | | | | | | | | |
| *Batch B6E1022 - EPA 5030B* | | | | | | | | | | |
| **Matrix Spike (B6E1022-MS1) Continued Source: 6D29003-01** Prepared & Analyzed: 05/10/16 | | | | | | | | | | |
| 1,3-Dichloropropane | **24.2** | 0.50 | ug/L | 20 | | 121 | 70-130 | | | |
| cis-1,3-Dichloropropylene | **10.4** | 0.50 | ug/L | 20 | | 51.8 | 70-130 | | | QM-01 |
| trans-1,3-Dichloropropylene | **7.04** | 0.50 | ug/L | 20 | | 35.2 | 70-130 | | | QM-01 |
| 1,1-Dichloropropylene | **18.4** | 0.50 | ug/L | 20 | | 92.0 | 70-130 | | | |
| Diisopropyl ether (DIPE) | **22.9** | 2.0 | ug/L | 20 | | 115 | 70-130 | | | |
| Ethylbenzene | **20.3** | 0.50 | ug/L | 20 | | 101 | 70-130 | | | |
| Ethyl-tert-Butyl Ether (ETBE) | **25.1** | 2.0 | ug/L | 20 | | 125 | 70-130 | | | |
| Gasoline Range Organics (GRO) | **579** | 100 | ug/L | 500 | | 116 | 70-130 | | | |
| Hexachlorobutadiene | **20.9** | 1.0 | ug/L | 20 | | 105 | 70-130 | | | |
| 2-Hexanone (MBK) | **60.5** | 10 | ug/L | 50 | | 121 | 70-130 | | | |
| Isopropylbenzene | **20.9** | 0.50 | ug/L | 20 | | 104 | 70-130 | | | |
| 4-Isopropyltoluene | **20.1** | 1.0 | ug/L | 20 | | 101 | 70-130 | | | |
| Methyl-tert-Butyl Ether (MTBE) | **38.0** | 2.0 | ug/L | 40 | | 95.0 | 70-130 | | | |
| Methylene Chloride | **18.0** | 5.0 | ug/L | 20 | | 90.1 | 0-200 | | | |
| 4-Methyl-2-pentanone (MIBK) | **58.0** | 10 | ug/L | 50 | | 116 | 70-130 | | | |
| Naphthalene | **23.4** | 2.0 | ug/L | 20 | 0.980 | 112 | 70-130 | | | |
| n-Propylbenzene | **20.0** | 0.50 | ug/L | 20 | | 100 | 70-130 | | | |
| Styrene | **19.3** | 0.50 | ug/L | 20 | | 96.4 | 70-130 | | | |
| 1,1,1,2-Tetrachloroethane | **22.4** | 0.50 | ug/L | 20 | | 112 | 70-130 | | | |
| 1,1,2,2-Tetrachloroethane | **25.1** | 0.50 | ug/L | 20 | | 125 | 70-130 | | | |
| Tetrachloroethylene (PCE) | **21.4** | 0.50 | ug/L | 20 | | 107 | 70-130 | | | |
| Toluene | **19.9** | 0.50 | ug/L | 20 | | 99.4 | 70-130 | | | |
| 1,2,3-Trichlorobenzene | **21.8** | 0.50 | ug/L | 20 | | 109 | 70-130 | | | |
| 1,2,4-Trichlorobenzene | **20.5** | 0.50 | ug/L | 20 | | 103 | 70-130 | | | |
| 1,1,1-Trichloroethane | **19.0** | 0.50 | ug/L | 20 | | 95.2 | 70-130 | | | |
| 1,1,2-Trichloroethane | **24.3** | 0.50 | ug/L | 20 | | 122 | 70-130 | | | |
| Trichloroethylene (TCE) | **19.8** | 0.50 | ug/L | 20 | | 99.2 | 70-130 | | | |
| Trichlorofluoromethane (R11) | **16.4** | 0.50 | ug/L | 20 | | 82.2 | 70-130 | | | |
| 1,2,3-Trichloropropane | **24.4** | 0.50 | ug/L | 20 | | 122 | 70-130 | | | |
| 1,1,2-Trichloro-1,2,2-trifluoroethane (R113) | **33.0** | 0.50 | ug/L | 40 | | 82.6 | 70-130 | | | |
| 1,3,5-Trimethylbenzene | **20.9** | 0.50 | ug/L | 20 | | 104 | 70-130 | | | |

**Viorel Vasile**
Operations Manager

# LABORATORY ANALYSIS RESULTS

**Client:** Stantec (TO)
**Project No:** 2057123300
**Project Name:** Grayson Power Plant Glendale Phase II

**AA Project No:** A732176
**Date Received:** 04/28/16
**Date Reported:** 05/12/16

| Analyte | Result | Reporting Limit | Units | Spike Level | Source Result | %REC | %REC Limits | RPD | RPD Limit | Notes |
|---|---|---|---|---|---|---|---|---|---|---|
| **VOCs, OXY & TPH Gasoline by GC/MS - Quality Control** | | | | | | | | | | |
| *Batch B6E1022 - EPA 5030B* | | | | | | | | | | |
| **Matrix Spike (B6E1022-MS1) Continued Source: 6D29003-01** Prepared & Analyzed: 05/10/16 | | | | | | | | | | |
| 1,2,4-Trimethylbenzene | **19.6** | 0.50 | ug/L | 20 | 0.360 | 96.2 | 70-130 | | | |
| Vinyl chloride | **18.9** | 0.50 | ug/L | 20 | | 94.6 | 70-130 | | | |
| o-Xylene | **18.9** | 0.50 | ug/L | 20 | | 94.6 | 70-130 | | | |
| m,p-Xylenes | **38.5** | 1.0 | ug/L | 40 | | 96.4 | 70-130 | | | |
| *Surrogate: 4-Bromofluorobenzene* | *53.8* | | *ug/L* | *50* | | *108* | *70-140* | | | |
| *Surrogate: Dibromofluoromethane* | *44.5* | | *ug/L* | *50* | | *88.9* | *70-140* | | | |
| *Surrogate: Toluene-d8* | *51.5* | | *ug/L* | *50* | | *103* | *70-140* | | | |
| **Matrix Spike Dup (B6E1022-MSD1) Source: 6D29003-01** Prepared & Analyzed: 05/10/16 | | | | | | | | | | |
| Acetone | **52.0** | 10 | ug/L | 50 | | 104 | 70-130 | 4.02 | 30 | |
| tert-Amyl Methyl Ether (TAME) | **24.7** | 2.0 | ug/L | 20 | | 124 | 70-130 | 0.406 | 30 | |
| Benzene | **18.6** | 0.50 | ug/L | 20 | | 93.0 | 70-130 | 3.43 | 30 | |
| Bromobenzene | **21.6** | 0.50 | ug/L | 20 | | 108 | 70-130 | 0.738 | 30 | |
| Bromochloromethane | **18.0** | 0.50 | ug/L | 20 | | 89.8 | 70-130 | 9.04 | 30 | |
| Bromodichloromethane | **19.6** | 0.50 | ug/L | 20 | | 97.9 | 70-130 | 3.27 | 30 | |
| Bromoform | **23.0** | 0.50 | ug/L | 20 | | 115 | 70-130 | 1.64 | 30 | |
| Bromomethane | **20.3** | 0.50 | ug/L | 20 | | 101 | 70-130 | 4.01 | 30 | |
| 2-Butanone (MEK) | **57.7** | 10 | ug/L | 50 | | 115 | 70-130 | 2.05 | 30 | |
| tert-Butyl alcohol (TBA) | **119** | 10 | ug/L | 100 | | 119 | 70-130 | 0.509 | 30 | |
| sec-Butylbenzene | **19.5** | 0.50 | ug/L | 20 | | 97.7 | 70-130 | 0.765 | 30 | |
| tert-Butylbenzene | **20.3** | 0.50 | ug/L | 20 | | 101 | 70-130 | 0.198 | 30 | |
| n-Butylbenzene | **19.6** | 0.50 | ug/L | 20 | | 97.8 | 70-130 | 0.154 | 30 | |
| Carbon Disulfide | **37.5** | 0.50 | ug/L | 50 | | 75.1 | 70-130 | 1.94 | 30 | |
| Carbon Tetrachloride | **19.1** | 0.50 | ug/L | 20 | | 95.7 | 70-130 | 2.37 | 30 | |
| Chlorobenzene | **18.7** | 0.50 | ug/L | 20 | | 93.7 | 70-130 | 3.05 | 30 | |
| Chloroethane | **16.9** | 0.50 | ug/L | 20 | | 84.6 | 70-130 | 1.35 | 30 | |
| Chloroform | **18.9** | 0.50 | ug/L | 20 | | 94.6 | 70-130 | 7.72 | 30 | |
| Chloromethane | **17.4** | 0.50 | ug/L | 20 | | 86.8 | 70-130 | 3.12 | 30 | |
| 2-Chlorotoluene | **19.5** | 0.50 | ug/L | 20 | | 97.6 | 70-130 | 0.823 | 30 | |
| 4-Chlorotoluene | **20.6** | 0.50 | ug/L | 20 | | 103 | 70-130 | 4.46 | 30 | |
| 1,2-Dibromo-3-chloropropane | **21.9** | 1.0 | ug/L | 20 | | 109 | 70-130 | 4.25 | 30 | |
| Dibromochloromethane | **23.3** | 0.50 | ug/L | 20 | | 116 | 70-130 | 1.24 | 30 | |

**Viorel Vasile**
Operations Manager

# LABORATORY ANALYSIS RESULTS

**Client:** Stantec (TO)
**Project No:** 2057123300
**Project Name:** Grayson Power Plant Glendale Phase II

**AA Project No:** A732176
**Date Received:** 04/28/16
**Date Reported:** 05/12/16

## VOCs, OXY & TPH Gasoline by GC/MS - Quality Control

*Batch B6E1022 - EPA 5030B*

**Matrix Spike Dup (B6E1022-MSD1)** **Source: 6D29003-01** Prepared & Analyzed: 05/10/16
**Continued**

| Analyte | Result | Reporting Limit | Units | Spike Level | Source Result | %REC | %REC Limits | RPD | RPD Limit | Notes |
|---|---|---|---|---|---|---|---|---|---|---|
| 1,2-Dibromoethane (EDB) | **23.0** | 0.50 | ug/L | 20 | | 115 | 70-130 | 1.49 | 30 | |
| Dibromomethane | **19.1** | 0.50 | ug/L | 20 | | 95.3 | 70-130 | 5.86 | 30 | |
| 1,3-Dichlorobenzene | **19.4** | 0.50 | ug/L | 20 | | 97.2 | 70-130 | 2.55 | 30 | |
| 1,2-Dichlorobenzene | **19.5** | 0.50 | ug/L | 20 | | 97.3 | 70-130 | 0.360 | 30 | |
| 1,4-Dichlorobenzene | **20.6** | 0.50 | ug/L | 20 | | 103 | 70-130 | 1.32 | 30 | |
| Dichlorodifluoromethane (R12) | **16.1** | 0.50 | ug/L | 20 | | 80.6 | 70-130 | 9.00 | 30 | |
| 1,1-Dichloroethane | **17.2** | 0.50 | ug/L | 20 | | 85.8 | 70-130 | 7.73 | 30 | |
| 1,2-Dichloroethane (EDC) | **19.0** | 0.50 | ug/L | 20 | | 94.8 | 70-130 | 7.46 | 30 | |
| 1,1-Dichloroethylene | **16.9** | 0.50 | ug/L | 20 | | 84.5 | 70-130 | 1.76 | 30 | |
| trans-1,2-Dichloroethylene | **16.1** | 0.50 | ug/L | 20 | | 80.5 | 70-130 | 0.743 | 30 | |
| cis-1,2-Dichloroethylene | **17.0** | 0.50 | ug/L | 20 | | 85.2 | 70-130 | 0.412 | 30 | |
| 1,2-Dichloropropane | **20.0** | 0.50 | ug/L | 20 | | 100 | 70-130 | 3.77 | 30 | |
| 2,2-Dichloropropane | **17.5** | 0.50 | ug/L | 20 | | 87.4 | 70-130 | 4.53 | 30 | |
| 1,3-Dichloropropane | **23.5** | 0.50 | ug/L | 20 | | 118 | 70-130 | 2.98 | 30 | |
| cis-1,3-Dichloropropylene | **10.6** | 0.50 | ug/L | 20 | | 53.0 | 70-130 | 2.38 | 30 | QM-01 |
| trans-1,3-Dichloropropylene | **7.03** | 0.50 | ug/L | 20 | | 35.2 | 70-130 | 0.142 | 30 | QM-01 |
| 1,1-Dichloropropylene | **17.5** | 0.50 | ug/L | 20 | | 87.5 | 70-130 | 5.07 | 30 | |
| Diisopropyl ether (DIPE) | **22.2** | 2.0 | ug/L | 20 | | 111 | 70-130 | 3.05 | 30 | |
| Ethylbenzene | **19.7** | 0.50 | ug/L | 20 | | 98.3 | 70-130 | 3.06 | 30 | |
| Ethyl-tert-Butyl Ether (ETBE) | **24.3** | 2.0 | ug/L | 20 | | 122 | 70-130 | 3.08 | 30 | |
| Gasoline Range Organics (GRO) | **504** | 100 | ug/L | 500 | | 101 | 70-130 | 13.9 | 30 | |
| Hexachlorobutadiene | **21.4** | 1.0 | ug/L | 20 | | 107 | 70-130 | 2.22 | 30 | |
| 2-Hexanone (MBK) | **58.8** | 10 | ug/L | 50 | | 118 | 70-130 | 2.82 | 30 | |
| Isopropylbenzene | **21.2** | 0.50 | ug/L | 20 | | 106 | 70-130 | 1.28 | 30 | |
| 4-Isopropyltoluene | **20.1** | 1.0 | ug/L | 20 | | 101 | 70-130 | 0.0993 | 30 | |
| Methyl-tert-Butyl Ether (MTBE) | **36.6** | 2.0 | ug/L | 40 | | 91.6 | 70-130 | 3.70 | 30 | |
| Methylene Chloride | **17.1** | 5.0 | ug/L | 20 | | 85.3 | 0-200 | 5.47 | 200 | |
| 4-Methyl-2-pentanone (MIBK) | **57.4** | 10 | ug/L | 50 | | 115 | 70-130 | 1.11 | 30 | |
| Naphthalene | **23.1** | 2.0 | ug/L | 20 | 0.980 | 111 | 70-130 | 0.989 | 30 | |
| n-Propylbenzene | **19.9** | 0.50 | ug/L | 20 | | 99.4 | 70-130 | 0.902 | 30 | |
| Styrene | **18.4** | 0.50 | ug/L | 20 | | 92.2 | 70-130 | 4.51 | 30 | |

**Viorel Vasile**
Operations Manager

# LABORATORY ANALYSIS RESULTS

**Client:** Stantec (TO)
**Project No:** 2057123300
**Project Name:** Grayson Power Plant Glendale Phase II

**AA Project No:** A732176
**Date Received:** 04/28/16
**Date Reported:** 05/12/16

| Analyte | Result | Reporting Limit | Units | Spike Level | Source Result | %REC | %REC Limits | RPD | RPD Limit | Notes |
|---|---|---|---|---|---|---|---|---|---|---|
| **VOCs, OXY & TPH Gasoline by GC/MS - Quality Control** | | | | | | | | | | |
| *Batch B6E1022 - EPA 5030B* | | | | | | | | | | |
| **Matrix Spike Dup (B6E1022-MSD1) Continued** | | | | **Source: 6D29003-01** Prepared & Analyzed: 05/10/16 | | | | | | |
| 1,1,1,2-Tetrachloroethane | **22.1** | 0.50 | ug/L | 20 | | 110 | 70-130 | 1.30 | 30 | |
| 1,1,2,2-Tetrachloroethane | **24.0** | 0.50 | ug/L | 20 | | 120 | 70-130 | 4.11 | 30 | |
| Tetrachloroethylene (PCE) | **20.5** | 0.50 | ug/L | 20 | | 103 | 70-130 | 4.06 | 30 | |
| Toluene | **19.4** | 0.50 | ug/L | 20 | | 97.2 | 70-130 | 2.19 | 30 | |
| 1,2,3-Trichlorobenzene | **23.6** | 0.50 | ug/L | 20 | | 118 | 70-130 | 8.06 | 30 | |
| 1,2,4-Trichlorobenzene | **21.0** | 0.50 | ug/L | 20 | | 105 | 70-130 | 2.07 | 30 | |
| 1,1,1-Trichloroethane | **18.3** | 0.50 | ug/L | 20 | | 91.4 | 70-130 | 4.07 | 30 | |
| 1,1,2-Trichloroethane | **23.5** | 0.50 | ug/L | 20 | | 117 | 70-130 | 3.52 | 30 | |
| Trichloroethylene (TCE) | **18.6** | 0.50 | ug/L | 20 | | 92.9 | 70-130 | 6.51 | 30 | |
| Trichlorofluoromethane (R11) | **16.1** | 0.50 | ug/L | 20 | | 80.3 | 70-130 | 2.40 | 30 | |
| 1,2,3-Trichloropropane | **23.4** | 0.50 | ug/L | 20 | | 117 | 70-130 | 4.26 | 30 | |
| 1,1,2-Trichloro-1,2,2-trifluoroethane (R113) | **33.1** | 0.50 | ug/L | 40 | | 82.8 | 70-130 | 0.181 | 30 | |
| 1,3,5-Trimethylbenzene | **20.9** | 0.50 | ug/L | 20 | | 104 | 70-130 | 0.144 | 30 | |
| 1,2,4-Trimethylbenzene | **19.7** | 0.50 | ug/L | 20 | 0.360 | 96.6 | 70-130 | 0.305 | 30 | |
| Vinyl chloride | **17.3** | 0.50 | ug/L | 20 | | 86.3 | 70-130 | 9.23 | 30 | |
| o-Xylene | **18.1** | 0.50 | ug/L | 20 | | 90.6 | 70-130 | 4.32 | 30 | |
| m,p-Xylenes | **37.0** | 1.0 | ug/L | 40 | | 92.6 | 70-130 | 4.02 | 30 | |
| *Surrogate: 4-Bromofluorobenzene* | *55.1* | | *ug/L* | *50* | | *110* | *70-140* | | | |
| *Surrogate: Dibromofluoromethane* | *43.1* | | *ug/L* | *50* | | *86.2* | *70-140* | | | |
| *Surrogate: Toluene-d8* | *52.0* | | *ug/L* | *50* | | *104* | *70-140* | | | |
| **VOCs, OXY & TPHG by GC/MS EPA 5035 - Quality Control** | | | | | | | | | | |
| *Batch B6E0423 - EPA 5035* | | | | | | | | | | |
| **Blank (B6E0423-BLK1)** | | | | Prepared & Analyzed: 05/04/16 | | | | | | |
| Acetone | <0.050 | 0.050 | mg/kg | | | | | | | |
| tert-Amyl Methyl Ether (TAME) | <0.0050 | 0.0050 | mg/kg | | | | | | | |
| Benzene | <0.0020 | 0.0020 | mg/kg | | | | | | | |
| Bromobenzene | <0.0050 | 0.0050 | mg/kg | | | | | | | |
| Bromochloromethane | <0.0050 | 0.0050 | mg/kg | | | | | | | |
| Bromodichloromethane | <0.0050 | 0.0050 | mg/kg | | | | | | | |

**Viorel Vasile**
Operations Manager

# LABORATORY ANALYSIS RESULTS

**Client:** Stantec (TO)
**Project No:** 2057123300
**Project Name:** Grayson Power Plant Glendale Phase II

**AA Project No:** A732176
**Date Received:** 04/28/16
**Date Reported:** 05/12/16

| Analyte | Result | Reporting Limit | Units | Spike Level | Source Result | %REC | %REC Limits | RPD | RPD Limit | Notes |
|---|---|---|---|---|---|---|---|---|---|---|
| **VOCs, OXY & TPHG by GC/MS EPA 5035 - Quality Control** | | | | | | | | | | |
| *Batch B6E0423 - EPA 5035* | | | | | | | | | | |
| **Blank (B6E0423-BLK1) Continued** | | | | Prepared & Analyzed: 05/04/16 | | | | | | |
| Bromoform | <0.0050 | 0.0050 | mg/kg | | | | | | | |
| Bromomethane | <0.0050 | 0.0050 | mg/kg | | | | | | | |
| 2-Butanone (MEK) | <0.050 | 0.050 | mg/kg | | | | | | | |
| tert-Butyl alcohol (TBA) | <0.020 | 0.020 | mg/kg | | | | | | | |
| sec-Butylbenzene | <0.0050 | 0.0050 | mg/kg | | | | | | | |
| tert-Butylbenzene | <0.0050 | 0.0050 | mg/kg | | | | | | | |
| n-Butylbenzene | <0.0050 | 0.0050 | mg/kg | | | | | | | |
| Carbon Disulfide | <0.0050 | 0.0050 | mg/kg | | | | | | | |
| Carbon Tetrachloride | <0.0050 | 0.0050 | mg/kg | | | | | | | |
| Chlorobenzene | <0.0050 | 0.0050 | mg/kg | | | | | | | |
| Chloroethane | <0.0050 | 0.0050 | mg/kg | | | | | | | |
| Chloroform | <0.0050 | 0.0050 | mg/kg | | | | | | | |
| Chloromethane | <0.0050 | 0.0050 | mg/kg | | | | | | | |
| 2-Chlorotoluene | <0.0050 | 0.0050 | mg/kg | | | | | | | |
| 4-Chlorotoluene | <0.0050 | 0.0050 | mg/kg | | | | | | | |
| 1,2-Dibromo-3-chloropropane | <0.010 | 0.010 | mg/kg | | | | | | | |
| Dibromochloromethane | <0.0050 | 0.0050 | mg/kg | | | | | | | |
| 1,2-Dibromoethane (EDB) | <0.0050 | 0.0050 | mg/kg | | | | | | | |
| Dibromomethane | <0.0050 | 0.0050 | mg/kg | | | | | | | |
| 1,4-Dichlorobenzene | <0.0050 | 0.0050 | mg/kg | | | | | | | |
| 1,3-Dichlorobenzene | <0.0050 | 0.0050 | mg/kg | | | | | | | |
| 1,2-Dichlorobenzene | <0.0050 | 0.0050 | mg/kg | | | | | | | |
| Dichlorodifluoromethane (R12) | <0.0050 | 0.0050 | mg/kg | | | | | | | |
| 1,1-Dichloroethane | <0.0050 | 0.0050 | mg/kg | | | | | | | |
| 1,2-Dichloroethane (EDC) | <0.0050 | 0.0050 | mg/kg | | | | | | | |
| trans-1,2-Dichloroethylene | <0.0050 | 0.0050 | mg/kg | | | | | | | |
| cis-1,2-Dichloroethylene | <0.0050 | 0.0050 | mg/kg | | | | | | | |
| 1,1-Dichloroethylene | <0.0050 | 0.0050 | mg/kg | | | | | | | |
| 2,2-Dichloropropane | <0.0050 | 0.0050 | mg/kg | | | | | | | |
| 1,3-Dichloropropane | <0.0050 | 0.0050 | mg/kg | | | | | | | |
| 1,2-Dichloropropane | <0.0050 | 0.0050 | mg/kg | | | | | | | |

**Viorel Vasile**
Operations Manager

# LABORATORY ANALYSIS RESULTS

**Client:** Stantec (TO)
**Project No:** 2057123300
**Project Name:** Grayson Power Plant Glendale Phase II

**AA Project No:** A732176
**Date Received:** 04/28/16
**Date Reported:** 05/12/16

| Analyte | Result | Reporting Limit | Units | Spike Level | Source Result | %REC | %REC Limits | RPD | RPD Limit | Notes |
|---|---|---|---|---|---|---|---|---|---|---|
| **VOCs, OXY & TPHG by GC/MS EPA 5035 - Quality Control** | | | | | | | | | | |
| *Batch B6E0423 - EPA 5035* | | | | | | | | | | |
| **Blank (B6E0423-BLK1) Continued** | | | | Prepared & Analyzed: 05/04/16 | | | | | | |
| trans-1,3-Dichloropropylene | <0.0050 | 0.0050 | mg/kg | | | | | | | |
| 1,1-Dichloropropylene | <0.0050 | 0.0050 | mg/kg | | | | | | | |
| cis-1,3-Dichloropropylene | <0.0050 | 0.0050 | mg/kg | | | | | | | |
| Diisopropyl ether (DIPE) | <0.0050 | 0.0050 | mg/kg | | | | | | | |
| Ethylbenzene | <0.0020 | 0.0020 | mg/kg | | | | | | | |
| Ethyl-tert-Butyl Ether (ETBE) | <0.0050 | 0.0050 | mg/kg | | | | | | | |
| Gasoline Range Organics (GRO) | <0.50 | 0.50 | mg/kg | | | | | | | |
| Hexachlorobutadiene | <0.010 | 0.010 | mg/kg | | | | | | | |
| 2-Hexanone (MBK) | <0.050 | 0.050 | mg/kg | | | | | | | |
| Isopropylbenzene | <0.0050 | 0.0050 | mg/kg | | | | | | | |
| 4-Isopropyltoluene | <0.0050 | 0.0050 | mg/kg | | | | | | | |
| Methyl-tert-Butyl Ether (MTBE) | <0.0050 | 0.0050 | mg/kg | | | | | | | |
| Methylene Chloride | <0.050 | 0.050 | mg/kg | | | | | | | |
| 4-Methyl-2-pentanone (MIBK) | <0.050 | 0.050 | mg/kg | | | | | | | |
| Naphthalene | <0.010 | 0.010 | mg/kg | | | | | | | |
| n-Propylbenzene | <0.0050 | 0.0050 | mg/kg | | | | | | | |
| Styrene | <0.0050 | 0.0050 | mg/kg | | | | | | | |
| 1,1,1,2-Tetrachloroethane | <0.0050 | 0.0050 | mg/kg | | | | | | | |
| 1,1,2,2-Tetrachloroethane | <0.0050 | 0.0050 | mg/kg | | | | | | | |
| Tetrachloroethylene (PCE) | <0.0050 | 0.0050 | mg/kg | | | | | | | |
| Toluene | <0.0020 | 0.0020 | mg/kg | | | | | | | |
| 1,2,4-Trichlorobenzene | <0.0050 | 0.0050 | mg/kg | | | | | | | |
| 1,2,3-Trichlorobenzene | <0.0050 | 0.0050 | mg/kg | | | | | | | |
| 1,1,2-Trichloroethane | <0.0050 | 0.0050 | mg/kg | | | | | | | |
| 1,1,1-Trichloroethane | <0.0050 | 0.0050 | mg/kg | | | | | | | |
| Trichloroethylene (TCE) | <0.0050 | 0.0050 | mg/kg | | | | | | | |
| Trichlorofluoromethane (R11) | <0.0050 | 0.0050 | mg/kg | | | | | | | |
| 1,2,3-Trichloropropane | <0.0050 | 0.0050 | mg/kg | | | | | | | |
| 1,1,2-Trichloro-1,2,2-trifluoroethane (R113) | <0.0050 | 0.0050 | mg/kg | | | | | | | |
| 1,3,5-Trimethylbenzene | <0.0050 | 0.0050 | mg/kg | | | | | | | |
| 1,2,4-Trimethylbenzene | <0.0050 | 0.0050 | mg/kg | | | | | | | |

**Viorel Vasile**
Operations Manager

# LABORATORY ANALYSIS RESULTS

**Client:** Stantec (TO)
**Project No:** 2057123300
**Project Name:** Grayson Power Plant Glendale Phase II

**AA Project No:** A732176
**Date Received:** 04/28/16
**Date Reported:** 05/12/16

| Analyte | Result | Reporting Limit | Units | Spike Level | Source Result | %REC | %REC Limits | RPD | RPD Limit | Notes |
|---|---|---|---|---|---|---|---|---|---|---|
| **VOCs, OXY & TPHG by GC/MS EPA 5035 - Quality Control** | | | | | | | | | | |
| *Batch B6E0423 - EPA 5035* | | | | | | | | | | |
| **Blank (B6E0423-BLK1) Continued** | | | | Prepared & Analyzed: 05/04/16 | | | | | | |
| Vinyl chloride | <0.0050 | 0.0050 | mg/kg | | | | | | | |
| o-Xylene | <0.0020 | 0.0020 | mg/kg | | | | | | | |
| m,p-Xylenes | <0.0020 | 0.0020 | mg/kg | | | | | | | |
| *Surrogate: 4-Bromofluorobenzene* | *0.100* | | *mg/kg* | *0.10* | | *100* | *70-140* | | | |
| *Surrogate: Dibromofluoromethane* | *0.106* | | *mg/kg* | *0.10* | | *106* | *70-140* | | | |
| *Surrogate: Toluene-d8* | *0.103* | | *mg/kg* | *0.10* | | *103* | *70-140* | | | |
| **LCS (B6E0423-BS1)** | | | | Prepared & Analyzed: 05/04/16 | | | | | | |
| Acetone | **0.0855** | 0.050 | mg/kg | 0.10 | | 85.5 | 70-130 | | | |
| tert-Amyl Methyl Ether (TAME) | **0.0361** | 0.0050 | mg/kg | 0.040 | | 90.2 | 70-130 | | | |
| Benzene | **0.0396** | 0.0020 | mg/kg | 0.040 | | 99.0 | 75-125 | | | |
| Bromobenzene | **0.0402** | 0.0050 | mg/kg | 0.040 | | 101 | 70-130 | | | |
| Bromochloromethane | **0.0372** | 0.0050 | mg/kg | 0.040 | | 93.1 | 70-130 | | | |
| Bromodichloromethane | **0.0382** | 0.0050 | mg/kg | 0.040 | | 95.5 | 75-125 | | | |
| Bromoform | **0.0363** | 0.0050 | mg/kg | 0.040 | | 90.8 | 75-125 | | | |
| Bromomethane | **0.0427** | 0.0050 | mg/kg | 0.040 | | 107 | 75-125 | | | |
| 2-Butanone (MEK) | **0.0941** | 0.050 | mg/kg | 0.10 | | 94.1 | 70-130 | | | |
| tert-Butyl alcohol (TBA) | **0.180** | 0.020 | mg/kg | 0.20 | | 90.1 | 70-130 | | | |
| sec-Butylbenzene | **0.0420** | 0.0050 | mg/kg | 0.040 | | 105 | 70-130 | | | |
| tert-Butylbenzene | **0.0421** | 0.0050 | mg/kg | 0.040 | | 105 | 70-130 | | | |
| n-Butylbenzene | **0.0439** | 0.0050 | mg/kg | 0.040 | | 110 | 70-130 | | | |
| Carbon Disulfide | **0.0952** | 0.0050 | mg/kg | 0.10 | | 95.2 | 70-130 | | | |
| Carbon Tetrachloride | **0.0406** | 0.0050 | mg/kg | 0.040 | | 102 | 75-125 | | | |
| Chlorobenzene | **0.0410** | 0.0050 | mg/kg | 0.040 | | 103 | 75-125 | | | |
| Chloroethane | **0.0404** | 0.0050 | mg/kg | 0.040 | | 101 | 75-125 | | | |
| Chloroform | **0.0398** | 0.0050 | mg/kg | 0.040 | | 99.5 | 75-125 | | | |
| Chloromethane | **0.0459** | 0.0050 | mg/kg | 0.040 | | 115 | 65-125 | | | |
| 2-Chlorotoluene | **0.0434** | 0.0050 | mg/kg | 0.040 | | 109 | 70-130 | | | |
| 4-Chlorotoluene | **0.0417** | 0.0050 | mg/kg | 0.040 | | 104 | 70-130 | | | |
| 1,2-Dibromo-3-chloropropane | **0.0320** | 0.010 | mg/kg | 0.040 | | 80.0 | 70-130 | | | |
| Dibromochloromethane | **0.0395** | 0.0050 | mg/kg | 0.040 | | 98.7 | 75-125 | | | |
| 1,2-Dibromoethane (EDB) | **0.0392** | 0.0050 | mg/kg | 0.040 | | 97.9 | 70-130 | | | |

**Viorel Vasile**
Operations Manager

# LABORATORY ANALYSIS RESULTS

**Client:** Stantec (TO)
**Project No:** 2057123300
**Project Name:** Grayson Power Plant Glendale Phase II

**AA Project No:** A732176
**Date Received:** 04/28/16
**Date Reported:** 05/12/16

## VOCs, OXY & TPHG by GC/MS EPA 5035 - Quality Control

*Batch B6E0423 - EPA 5035*

**LCS (B6E0423-BS1) Continued** — Prepared & Analyzed: 05/04/16

| Analyte | Result | Reporting Limit | Units | Spike Level | Source Result | %REC | %REC Limits | RPD | RPD Limit | Notes |
|---|---|---|---|---|---|---|---|---|---|---|
| Dibromomethane | **0.0361** | 0.0050 | mg/kg | 0.040 | | 90.2 | 70-130 | | | |
| 1,4-Dichlorobenzene | **0.0410** | 0.0050 | mg/kg | 0.040 | | 103 | 75-125 | | | |
| 1,3-Dichlorobenzene | **0.0409** | 0.0050 | mg/kg | 0.040 | | 102 | 70-130 | | | |
| 1,2-Dichlorobenzene | **0.0408** | 0.0050 | mg/kg | 0.040 | | 102 | 70-130 | | | |
| Dichlorodifluoromethane (R12) | **0.0384** | 0.0050 | mg/kg | 0.040 | | 96.0 | 70-130 | | | |
| 1,1-Dichloroethane | **0.0408** | 0.0050 | mg/kg | 0.040 | | 102 | 70-125 | | | |
| 1,2-Dichloroethane (EDC) | **0.0367** | 0.0050 | mg/kg | 0.040 | | 91.8 | 75-125 | | | |
| trans-1,2-Dichloroethylene | **0.0401** | 0.0050 | mg/kg | 0.040 | | 100 | 75-125 | | | |
| cis-1,2-Dichloroethylene | **0.0382** | 0.0050 | mg/kg | 0.040 | | 95.4 | 75-125 | | | |
| 1,1-Dichloroethylene | **0.0368** | 0.0050 | mg/kg | 0.040 | | 91.9 | 70-130 | | | |
| 2,2-Dichloropropane | **0.0398** | 0.0050 | mg/kg | 0.040 | | 99.6 | 70-130 | | | |
| 1,3-Dichloropropane | **0.0389** | 0.0050 | mg/kg | 0.040 | | 97.2 | 70-130 | | | |
| 1,2-Dichloropropane | **0.0389** | 0.0050 | mg/kg | 0.040 | | 97.2 | 75-130 | | | |
| trans-1,3-Dichloropropylene | **0.0399** | 0.0050 | mg/kg | 0.040 | | 99.8 | 70-130 | | | |
| 1,1-Dichloropropylene | **0.0398** | 0.0050 | mg/kg | 0.040 | | 99.6 | 70-130 | | | |
| cis-1,3-Dichloropropylene | **0.0382** | 0.0050 | mg/kg | 0.040 | | 95.4 | 75-125 | | | |
| Diisopropyl ether (DIPE) | **0.0366** | 0.0050 | mg/kg | 0.040 | | 91.5 | 70-130 | | | |
| Ethylbenzene | **0.0431** | 0.0020 | mg/kg | 0.040 | | 108 | 75-125 | | | |
| Ethyl-tert-Butyl Ether (ETBE) | **0.0376** | 0.0050 | mg/kg | 0.040 | | 94.0 | 70-130 | | | |
| Gasoline Range Organics (GRO) | **1.08** | 0.50 | mg/kg | 1.0 | | 108 | 70-130 | | | |
| Hexachlorobutadiene | **0.0419** | 0.010 | mg/kg | 0.040 | | 105 | 70-130 | | | |
| 2-Hexanone (MBK) | **0.103** | 0.050 | mg/kg | 0.10 | | 103 | 70-130 | | | |
| Isopropylbenzene | **0.0421** | 0.0050 | mg/kg | 0.040 | | 105 | 70-130 | | | |
| 4-Isopropyltoluene | **0.0424** | 0.0050 | mg/kg | 0.040 | | 106 | 70-130 | | | |
| Methyl-tert-Butyl Ether (MTBE) | **0.0721** | 0.0050 | mg/kg | 0.080 | | 90.1 | 75-125 | | | |
| Methylene Chloride | **0.0352** | 0.050 | mg/kg | 0.040 | | 88.0 | 75-130 | | | |
| 4-Methyl-2-pentanone (MIBK) | **0.0802** | 0.050 | mg/kg | 0.10 | | 80.2 | 70-130 | | | |
| Naphthalene | **0.0368** | 0.010 | mg/kg | 0.040 | | 92.0 | 70-130 | | | |
| n-Propylbenzene | **0.0431** | 0.0050 | mg/kg | 0.040 | | 108 | 70-130 | | | |
| Styrene | **0.0411** | 0.0050 | mg/kg | 0.040 | | 103 | 70-130 | | | |
| 1,1,1,2-Tetrachloroethane | **0.0405** | 0.0050 | mg/kg | 0.040 | | 101 | 70-130 | | | |

**Viorel Vasile**
Operations Manager

# LABORATORY ANALYSIS RESULTS

**Client:** Stantec (TO)
**Project No:** 2057123300
**Project Name:** Grayson Power Plant Glendale Phase II

**AA Project No:** A732176
**Date Received:** 04/28/16
**Date Reported:** 05/12/16

| Analyte | Result | Reporting Limit | Units | Spike Level | Source Result | %REC | %REC Limits | RPD | RPD Limit | Notes |
|---|---|---|---|---|---|---|---|---|---|---|
| **VOCs, OXY & TPHG by GC/MS EPA 5035 - Quality Control** | | | | | | | | | | |
| *Batch B6E0423 - EPA 5035* | | | | | | | | | | |
| **LCS (B6E0423-BS1) Continued** | | | | Prepared & Analyzed: 05/04/16 | | | | | | |
| 1,1,2,2-Tetrachloroethane | **0.0360** | 0.0050 | mg/kg | 0.040 | | 90.0 | 70-135 | | | |
| Tetrachloroethylene (PCE) | **0.0438** | 0.0050 | mg/kg | 0.040 | | 110 | 75-125 | | | |
| Toluene | **0.0414** | 0.0020 | mg/kg | 0.040 | | 104 | 75-125 | | | |
| 1,2,4-Trichlorobenzene | **0.0401** | 0.0050 | mg/kg | 0.040 | | 100 | 70-130 | | | |
| 1,2,3-Trichlorobenzene | **0.0387** | 0.0050 | mg/kg | 0.040 | | 96.8 | 70-130 | | | |
| 1,1,2-Trichloroethane | **0.0397** | 0.0050 | mg/kg | 0.040 | | 99.2 | 75-125 | | | |
| 1,1,1-Trichloroethane | **0.0408** | 0.0050 | mg/kg | 0.040 | | 102 | 75-125 | | | |
| Trichloroethylene (TCE) | **0.0404** | 0.0050 | mg/kg | 0.040 | | 101 | 75-125 | | | |
| Trichlorofluoromethane (R11) | **0.0477** | 0.0050 | mg/kg | 0.040 | | 119 | 70-130 | | | |
| 1,2,3-Trichloropropane | **0.0364** | 0.0050 | mg/kg | 0.040 | | 91.1 | 70-130 | | | |
| 1,1,2-Trichloro-1,2,2-trifluoroethane (R113) | **0.0993** | 0.0050 | mg/kg | 0.080 | | 124 | 70-130 | | | |
| 1,3,5-Trimethylbenzene | **0.0410** | 0.0050 | mg/kg | 0.040 | | 102 | 70-130 | | | |
| 1,2,4-Trimethylbenzene | **0.0403** | 0.0050 | mg/kg | 0.040 | | 101 | 70-130 | | | |
| Vinyl chloride | **0.0395** | 0.0050 | mg/kg | 0.040 | | 98.8 | 75-125 | | | |
| o-Xylene | **0.0406** | 0.0020 | mg/kg | 0.040 | | 102 | 75-125 | | | |
| m,p-Xylenes | **0.0821** | 0.0020 | mg/kg | 0.080 | | 103 | 70-130 | | | |
| *Surrogate: 4-Bromofluorobenzene* | *0.0992* | | *mg/kg* | *0.10* | | *99.2* | *70-140* | | | |
| *Surrogate: Dibromofluoromethane* | *0.0955* | | *mg/kg* | *0.10* | | *95.5* | *70-140* | | | |
| *Surrogate: Toluene-d8* | *0.103* | | *mg/kg* | *0.10* | | *103* | *70-140* | | | |
| **LCS Dup (B6E0423-BSD1)** | | | | Prepared: 05/04/16 Analyzed: 05/05/16 | | | | | | |
| Acetone | **0.0700** | 0.050 | mg/kg | 0.10 | | 70.0 | 70-130 | 19.9 | 30 | |
| tert-Amyl Methyl Ether (TAME) | **0.0363** | 0.0050 | mg/kg | 0.040 | | 90.8 | 70-130 | 0.552 | 30 | |
| Benzene | **0.0394** | 0.0020 | mg/kg | 0.040 | | 98.4 | 75-125 | 0.557 | 30 | |
| Bromobenzene | **0.0406** | 0.0050 | mg/kg | 0.040 | | 102 | 70-130 | 0.940 | 30 | |
| Bromochloromethane | **0.0402** | 0.0050 | mg/kg | 0.040 | | 100 | 70-130 | 7.70 | 30 | |
| Bromodichloromethane | **0.0381** | 0.0050 | mg/kg | 0.040 | | 95.2 | 75-125 | 0.367 | 30 | |
| Bromoform | **0.0369** | 0.0050 | mg/kg | 0.040 | | 92.2 | 75-125 | 1.58 | 30 | |
| Bromomethane | **0.0353** | 0.0050 | mg/kg | 0.040 | | 88.2 | 75-125 | 19.1 | 30 | |
| 2-Butanone (MEK) | **0.0741** | 0.050 | mg/kg | 0.10 | | 74.1 | 70-130 | 23.8 | 30 | |
| tert-Butyl alcohol (TBA) | **0.183** | 0.020 | mg/kg | 0.20 | | 91.6 | 70-130 | 1.72 | 30 | |

**Viorel Vasile**
Operations Manager

# LABORATORY ANALYSIS RESULTS

**Client:** Stantec (TO)
**Project No:** 2057123300
**Project Name:** Grayson Power Plant Glendale Phase II

**AA Project No:** A732176
**Date Received:** 04/28/16
**Date Reported:** 05/12/16

## VOCs, OXY & TPHG by GC/MS EPA 5035 - Quality Control

*Batch B6E0423 - EPA 5035*

**LCS Dup (B6E0423-BSD1) Continued** Prepared: 05/04/16 Analyzed: 05/05/16

| Analyte | Result | Reporting Limit | Units | Spike Level | Source Result | %REC | %REC Limits | RPD | RPD Limit | Notes |
|---|---|---|---|---|---|---|---|---|---|---|
| sec-Butylbenzene | **0.0395** | 0.0050 | mg/kg | 0.040 | | 98.8 | 70-130 | 6.08 | 30 | |
| tert-Butylbenzene | **0.0404** | 0.0050 | mg/kg | 0.040 | | 101 | 70-130 | 3.97 | 30 | |
| n-Butylbenzene | **0.0388** | 0.0050 | mg/kg | 0.040 | | 97.1 | 70-130 | 12.3 | 30 | |
| Carbon Disulfide | **0.0937** | 0.0050 | mg/kg | 0.10 | | 93.7 | 70-130 | 1.59 | 30 | |
| Carbon Tetrachloride | **0.0382** | 0.0050 | mg/kg | 0.040 | | 95.4 | 75-125 | 6.20 | 30 | |
| Chlorobenzene | **0.0392** | 0.0050 | mg/kg | 0.040 | | 98.1 | 75-125 | 4.48 | 30 | |
| Chloroethane | **0.0414** | 0.0050 | mg/kg | 0.040 | | 104 | 75-125 | 2.39 | 30 | |
| Chloroform | **0.0400** | 0.0050 | mg/kg | 0.040 | | 100 | 75-125 | 0.551 | 30 | |
| Chloromethane | **0.0404** | 0.0050 | mg/kg | 0.040 | | 101 | 65-125 | 12.6 | 30 | |
| 2-Chlorotoluene | **0.0395** | 0.0050 | mg/kg | 0.040 | | 98.8 | 70-130 | 9.35 | 30 | |
| 4-Chlorotoluene | **0.0406** | 0.0050 | mg/kg | 0.040 | | 102 | 70-130 | 2.48 | 30 | |
| 1,2-Dibromo-3-chloropropane | **0.0365** | 0.010 | mg/kg | 0.040 | | 91.3 | 70-130 | 13.3 | 30 | |
| Dibromochloromethane | **0.0389** | 0.0050 | mg/kg | 0.040 | | 97.2 | 75-125 | 1.58 | 30 | |
| 1,2-Dibromoethane (EDB) | **0.0384** | 0.0050 | mg/kg | 0.040 | | 96.1 | 70-130 | 1.86 | 30 | |
| Dibromomethane | **0.0383** | 0.0050 | mg/kg | 0.040 | | 95.8 | 70-130 | 5.97 | 30 | |
| 1,4-Dichlorobenzene | **0.0389** | 0.0050 | mg/kg | 0.040 | | 97.2 | 75-125 | 5.31 | 30 | |
| 1,3-Dichlorobenzene | **0.0388** | 0.0050 | mg/kg | 0.040 | | 97.1 | 70-130 | 5.17 | 30 | |
| 1,2-Dichlorobenzene | **0.0404** | 0.0050 | mg/kg | 0.040 | | 101 | 70-130 | 0.985 | 30 | |
| Dichlorodifluoromethane (R12) | **0.0380** | 0.0050 | mg/kg | 0.040 | | 94.9 | 70-130 | 1.10 | 30 | |
| 1,1-Dichloroethane | **0.0407** | 0.0050 | mg/kg | 0.040 | | 102 | 70-125 | 0.295 | 30 | |
| 1,2-Dichloroethane (EDC) | **0.0365** | 0.0050 | mg/kg | 0.040 | | 91.3 | 75-125 | 0.492 | 30 | |
| trans-1,2-Dichloroethylene | **0.0401** | 0.0050 | mg/kg | 0.040 | | 100 | 75-125 | 0.0499 | 30 | |
| cis-1,2-Dichloroethylene | **0.0398** | 0.0050 | mg/kg | 0.040 | | 99.6 | 75-125 | 4.26 | 30 | |
| 1,1-Dichloroethylene | **0.0378** | 0.0050 | mg/kg | 0.040 | | 94.4 | 70-130 | 2.68 | 30 | |
| 2,2-Dichloropropane | **0.0337** | 0.0050 | mg/kg | 0.040 | | 84.3 | 70-130 | 16.6 | 30 | |
| 1,3-Dichloropropane | **0.0384** | 0.0050 | mg/kg | 0.040 | | 96.0 | 70-130 | 1.24 | 30 | |
| 1,2-Dichloropropane | **0.0392** | 0.0050 | mg/kg | 0.040 | | 98.0 | 75-130 | 0.820 | 30 | |
| trans-1,3-Dichloropropylene | **0.0365** | 0.0050 | mg/kg | 0.040 | | 91.2 | 70-130 | 9.06 | 30 | |
| 1,1-Dichloropropylene | **0.0364** | 0.0050 | mg/kg | 0.040 | | 91.0 | 70-130 | 8.97 | 30 | |
| cis-1,3-Dichloropropylene | **0.0375** | 0.0050 | mg/kg | 0.040 | | 93.8 | 75-125 | 1.74 | 30 | |
| Diisopropyl ether (DIPE) | **0.0388** | 0.0050 | mg/kg | 0.040 | | 96.9 | 70-130 | 5.73 | 30 | |

**Viorel Vasile**
Operations Manager

# LABORATORY ANALYSIS RESULTS

**Client:** Stantec (TO)
**Project No:** 2057123300
**Project Name:** Grayson Power Plant Glendale Phase II

**AA Project No:** A732176
**Date Received:** 04/28/16
**Date Reported:** 05/12/16

## VOCs, OXY & TPHG by GC/MS EPA 5035 - Quality Control

*Batch B6E0423 - EPA 5035*

**LCS Dup (B6E0423-BSD1) Continued** Prepared: 05/04/16 Analyzed: 05/05/16

| Analyte | Result | Reporting Limit | Units | Spike Level | Source Result | %REC | %REC Limits | RPD | RPD Limit | Notes |
|---|---|---|---|---|---|---|---|---|---|---|
| Ethylbenzene | **0.0392** | 0.0020 | mg/kg | 0.040 | | 98.0 | 75-125 | 9.44 | 30 | |
| Ethyl-tert-Butyl Ether (ETBE) | **0.0381** | 0.0050 | mg/kg | 0.040 | | 95.2 | 70-130 | 1.22 | 30 | |
| Gasoline Range Organics (GRO) | **1.06** | 0.50 | mg/kg | 1.0 | | 106 | 70-130 | 2.02 | 30 | |
| Hexachlorobutadiene | **0.0378** | 0.010 | mg/kg | 0.040 | | 94.5 | 70-130 | 10.3 | 30 | |
| 2-Hexanone (MBK) | **0.0880** | 0.050 | mg/kg | 0.10 | | 88.0 | 70-130 | 16.0 | 30 | |
| Isopropylbenzene | **0.0404** | 0.0050 | mg/kg | 0.040 | | 101 | 70-130 | 4.17 | 30 | |
| 4-Isopropyltoluene | **0.0391** | 0.0050 | mg/kg | 0.040 | | 97.8 | 70-130 | 8.00 | 30 | |
| Methyl-tert-Butyl Ether (MTBE) | **0.0762** | 0.0050 | mg/kg | 0.080 | | 95.2 | 75-125 | 5.48 | 30 | |
| Methylene Chloride | **0.0393** | 0.050 | mg/kg | 0.040 | | 98.4 | 75-130 | 11.1 | 30 | |
| 4-Methyl-2-pentanone (MIBK) | **0.0906** | 0.050 | mg/kg | 0.10 | | 90.6 | 70-130 | 12.2 | 30 | |
| Naphthalene | **0.0370** | 0.010 | mg/kg | 0.040 | | 92.6 | 70-130 | 0.650 | 30 | |
| n-Propylbenzene | **0.0416** | 0.0050 | mg/kg | 0.040 | | 104 | 70-130 | 3.73 | 30 | |
| Styrene | **0.0362** | 0.0050 | mg/kg | 0.040 | | 90.6 | 70-130 | 12.5 | 30 | |
| 1,1,1,2-Tetrachloroethane | **0.0387** | 0.0050 | mg/kg | 0.040 | | 96.7 | 70-130 | 4.70 | 30 | |
| 1,1,2,2-Tetrachloroethane | **0.0361** | 0.0050 | mg/kg | 0.040 | | 90.4 | 70-135 | 0.388 | 30 | |
| Tetrachloroethylene (PCE) | **0.0390** | 0.0050 | mg/kg | 0.040 | | 97.4 | 75-125 | 11.7 | 30 | |
| Toluene | **0.0383** | 0.0020 | mg/kg | 0.040 | | 95.8 | 75-125 | 7.72 | 30 | |
| 1,2,4-Trichlorobenzene | **0.0365** | 0.0050 | mg/kg | 0.040 | | 91.2 | 70-130 | 9.50 | 30 | |
| 1,2,3-Trichlorobenzene | **0.0368** | 0.0050 | mg/kg | 0.040 | | 92.0 | 70-130 | 5.08 | 30 | |
| 1,1,2-Trichloroethane | **0.0392** | 0.0050 | mg/kg | 0.040 | | 98.1 | 75-125 | 1.12 | 30 | |
| 1,1,1-Trichloroethane | **0.0381** | 0.0050 | mg/kg | 0.040 | | 95.2 | 75-125 | 6.80 | 30 | |
| Trichloroethylene (TCE) | **0.0388** | 0.0050 | mg/kg | 0.040 | | 97.0 | 75-125 | 4.09 | 30 | |
| Trichlorofluoromethane (R11) | **0.0457** | 0.0050 | mg/kg | 0.040 | | 114 | 70-130 | 4.32 | 30 | |
| 1,2,3-Trichloropropane | **0.0347** | 0.0050 | mg/kg | 0.040 | | 86.8 | 70-130 | 4.89 | 30 | |
| 1,1,2-Trichloro-1,2,2-trifluoroethane (R113) | **0.0932** | 0.0050 | mg/kg | 0.080 | | 116 | 70-130 | 6.34 | 30 | |
| 1,3,5-Trimethylbenzene | **0.0399** | 0.0050 | mg/kg | 0.040 | | 99.8 | 70-130 | 2.72 | 30 | |
| 1,2,4-Trimethylbenzene | **0.0394** | 0.0050 | mg/kg | 0.040 | | 98.4 | 70-130 | 2.31 | 30 | |
| Vinyl chloride | **0.0399** | 0.0050 | mg/kg | 0.040 | | 99.7 | 75-125 | 0.856 | 30 | |
| o-Xylene | **0.0387** | 0.0020 | mg/kg | 0.040 | | 96.6 | 75-125 | 4.99 | 30 | |
| m,p-Xylenes | **0.0762** | 0.0020 | mg/kg | 0.080 | | 95.2 | 70-130 | 7.51 | 30 | |

**Viorel Vasile**
Operations Manager

# LABORATORY ANALYSIS RESULTS

**Client:** Stantec (TO)
**Project No:** 2057123300
**Project Name:** Grayson Power Plant Glendale Phase II

**AA Project No:** A732176
**Date Received:** 04/28/16
**Date Reported:** 05/12/16

| Analyte | Result | Reporting Limit | Units | Spike Level | Source Result | %REC | %REC Limits | RPD | RPD Limit | Notes |
|---|---|---|---|---|---|---|---|---|---|---|
| **VOCs, OXY & TPHG by GC/MS EPA 5035 - Quality Control** | | | | | | | | | | |
| *Batch B6E0423 - EPA 5035* | | | | | | | | | | |
| **LCS Dup (B6E0423-BSD1) Continued** | | | | Prepared: 05/04/16 Analyzed: 05/05/16 | | | | | | |
| *Surrogate: 4-Bromofluorobenzene* | *0.101* | | *mg/kg* | *0.10* | | *101* | *70-140* | | | |
| *Surrogate: Dibromofluoromethane* | *0.103* | | *mg/kg* | *0.10* | | *103* | *70-140* | | | |
| *Surrogate: Toluene-d8* | *0.101* | | *mg/kg* | *0.10* | | *101* | *70-140* | | | |
| *Batch B6E0522 - EPA 5035* | | | | | | | | | | |
| **Blank (B6E0522-BLK1)** | | | | Prepared & Analyzed: 05/05/16 | | | | | | |
| Acetone | <0.050 | 0.050 | mg/kg | | | | | | | |
| tert-Amyl Methyl Ether (TAME) | <0.0050 | 0.0050 | mg/kg | | | | | | | |
| Benzene | <0.0020 | 0.0020 | mg/kg | | | | | | | |
| Bromobenzene | <0.0050 | 0.0050 | mg/kg | | | | | | | |
| Bromochloromethane | <0.0050 | 0.0050 | mg/kg | | | | | | | |
| Bromodichloromethane | <0.0050 | 0.0050 | mg/kg | | | | | | | |
| Bromoform | <0.0050 | 0.0050 | mg/kg | | | | | | | |
| Bromomethane | <0.0050 | 0.0050 | mg/kg | | | | | | | |
| 2-Butanone (MEK) | <0.050 | 0.050 | mg/kg | | | | | | | |
| tert-Butyl alcohol (TBA) | <0.020 | 0.020 | mg/kg | | | | | | | |
| sec-Butylbenzene | <0.0050 | 0.0050 | mg/kg | | | | | | | |
| tert-Butylbenzene | <0.0050 | 0.0050 | mg/kg | | | | | | | |
| n-Butylbenzene | <0.0050 | 0.0050 | mg/kg | | | | | | | |
| Carbon Disulfide | <0.0050 | 0.0050 | mg/kg | | | | | | | |
| Carbon Tetrachloride | <0.0050 | 0.0050 | mg/kg | | | | | | | |
| Chlorobenzene | <0.0050 | 0.0050 | mg/kg | | | | | | | |
| Chloroethane | <0.0050 | 0.0050 | mg/kg | | | | | | | |
| Chloroform | <0.0050 | 0.0050 | mg/kg | | | | | | | |
| Chloromethane | <0.0050 | 0.0050 | mg/kg | | | | | | | |
| 2-Chlorotoluene | <0.0050 | 0.0050 | mg/kg | | | | | | | |
| 4-Chlorotoluene | <0.0050 | 0.0050 | mg/kg | | | | | | | |
| 1,2-Dibromo-3-chloropropane | <0.010 | 0.010 | mg/kg | | | | | | | |
| Dibromochloromethane | <0.0050 | 0.0050 | mg/kg | | | | | | | |
| 1,2-Dibromoethane (EDB) | <0.0050 | 0.0050 | mg/kg | | | | | | | |
| Dibromomethane | <0.0050 | 0.0050 | mg/kg | | | | | | | |
| 1,4-Dichlorobenzene | <0.0050 | 0.0050 | mg/kg | | | | | | | |

**Viorel Vasile**
Operations Manager

# LABORATORY ANALYSIS RESULTS

**Client:** Stantec (TO)
**Project No:** 2057123300
**Project Name:** Grayson Power Plant Glendale Phase II

**AA Project No:** A732176
**Date Received:** 04/28/16
**Date Reported:** 05/12/16

| Analyte | Result | Reporting Limit | Units | Spike Level | Source Result | %REC | %REC Limits | RPD | RPD Limit | Notes |
|---|---|---|---|---|---|---|---|---|---|---|
| **VOCs, OXY & TPHG by GC/MS EPA 5035 - Quality Control** | | | | | | | | | | |
| *Batch B6E0522 - EPA 5035* | | | | | | | | | | |
| **Blank (B6E0522-BLK1) Continued** | | | | Prepared & Analyzed: 05/05/16 | | | | | | |
| 1,3-Dichlorobenzene | <0.0050 | 0.0050 | mg/kg | | | | | | | |
| 1,2-Dichlorobenzene | <0.0050 | 0.0050 | mg/kg | | | | | | | |
| Dichlorodifluoromethane (R12) | <0.0050 | 0.0050 | mg/kg | | | | | | | |
| 1,1-Dichloroethane | <0.0050 | 0.0050 | mg/kg | | | | | | | |
| 1,2-Dichloroethane (EDC) | <0.0050 | 0.0050 | mg/kg | | | | | | | |
| trans-1,2-Dichloroethylene | <0.0050 | 0.0050 | mg/kg | | | | | | | |
| cis-1,2-Dichloroethylene | <0.0050 | 0.0050 | mg/kg | | | | | | | |
| 1,1-Dichloroethylene | <0.0050 | 0.0050 | mg/kg | | | | | | | |
| 2,2-Dichloropropane | <0.0050 | 0.0050 | mg/kg | | | | | | | |
| 1,3-Dichloropropane | <0.0050 | 0.0050 | mg/kg | | | | | | | |
| 1,2-Dichloropropane | <0.0050 | 0.0050 | mg/kg | | | | | | | |
| trans-1,3-Dichloropropylene | <0.0050 | 0.0050 | mg/kg | | | | | | | |
| 1,1-Dichloropropylene | <0.0050 | 0.0050 | mg/kg | | | | | | | |
| cis-1,3-Dichloropropylene | <0.0050 | 0.0050 | mg/kg | | | | | | | |
| Diisopropyl ether (DIPE) | <0.0050 | 0.0050 | mg/kg | | | | | | | |
| Ethylbenzene | <0.0020 | 0.0020 | mg/kg | | | | | | | |
| Ethyl-tert-Butyl Ether (ETBE) | <0.0050 | 0.0050 | mg/kg | | | | | | | |
| Gasoline Range Organics (GRO) | <0.50 | 0.50 | mg/kg | | | | | | | |
| Hexachlorobutadiene | <0.010 | 0.010 | mg/kg | | | | | | | |
| 2-Hexanone (MBK) | <0.050 | 0.050 | mg/kg | | | | | | | |
| Isopropylbenzene | <0.0050 | 0.0050 | mg/kg | | | | | | | |
| 4-Isopropyltoluene | <0.0050 | 0.0050 | mg/kg | | | | | | | |
| Methyl-tert-Butyl Ether (MTBE) | <0.0050 | 0.0050 | mg/kg | | | | | | | |
| Methylene Chloride | <0.050 | 0.050 | mg/kg | | | | | | | |
| 4-Methyl-2-pentanone (MIBK) | <0.050 | 0.050 | mg/kg | | | | | | | |
| Naphthalene | <0.010 | 0.010 | mg/kg | | | | | | | |
| n-Propylbenzene | <0.0050 | 0.0050 | mg/kg | | | | | | | |
| Styrene | <0.0050 | 0.0050 | mg/kg | | | | | | | |
| 1,1,1,2-Tetrachloroethane | <0.0050 | 0.0050 | mg/kg | | | | | | | |
| 1,1,2,2-Tetrachloroethane | <0.0050 | 0.0050 | mg/kg | | | | | | | |
| Tetrachloroethylene (PCE) | <0.0050 | 0.0050 | mg/kg | | | | | | | |

**Viorel Vasile**
Operations Manager

# LABORATORY ANALYSIS RESULTS

**Client:** Stantec (TO)
**Project No:** 2057123300
**Project Name:** Grayson Power Plant Glendale Phase II

**AA Project No:** A732176
**Date Received:** 04/28/16
**Date Reported:** 05/12/16

| Analyte | Result | Reporting Limit | Units | Spike Level | Source Result | %REC | %REC Limits | RPD | RPD Limit | Notes |
|---|---|---|---|---|---|---|---|---|---|---|
| **VOCs, OXY & TPHG by GC/MS EPA 5035 - Quality Control** | | | | | | | | | | |
| *Batch B6E0522 - EPA 5035* | | | | | | | | | | |
| **Blank (B6E0522-BLK1) Continued** | | | | Prepared & Analyzed: 05/05/16 | | | | | | |
| Toluene | <0.0020 | 0.0020 | mg/kg | | | | | | | |
| 1,2,4-Trichlorobenzene | <0.0050 | 0.0050 | mg/kg | | | | | | | |
| 1,2,3-Trichlorobenzene | <0.0050 | 0.0050 | mg/kg | | | | | | | |
| 1,1,2-Trichloroethane | <0.0050 | 0.0050 | mg/kg | | | | | | | |
| 1,1,1-Trichloroethane | <0.0050 | 0.0050 | mg/kg | | | | | | | |
| Trichloroethylene (TCE) | <0.0050 | 0.0050 | mg/kg | | | | | | | |
| Trichlorofluoromethane (R11) | <0.0050 | 0.0050 | mg/kg | | | | | | | |
| 1,2,3-Trichloropropane | <0.0050 | 0.0050 | mg/kg | | | | | | | |
| 1,1,2-Trichloro-1,2,2-trifluoroethane (R113) | <0.0050 | 0.0050 | mg/kg | | | | | | | |
| 1,3,5-Trimethylbenzene | <0.0050 | 0.0050 | mg/kg | | | | | | | |
| 1,2,4-Trimethylbenzene | <0.0050 | 0.0050 | mg/kg | | | | | | | |
| Vinyl chloride | <0.0050 | 0.0050 | mg/kg | | | | | | | |
| o-Xylene | <0.0020 | 0.0020 | mg/kg | | | | | | | |
| m,p-Xylenes | <0.0020 | 0.0020 | mg/kg | | | | | | | |
| *Surrogate: 4-Bromofluorobenzene* | *0.101* | | *mg/kg* | *0.10* | | *101* | *70-140* | | | |
| *Surrogate: Dibromofluoromethane* | *0.105* | | *mg/kg* | *0.10* | | *105* | *70-140* | | | |
| *Surrogate: Toluene-d8* | *0.105* | | *mg/kg* | *0.10* | | *105* | *70-140* | | | |
| **LCS (B6E0522-BS1)** | | | | Prepared & Analyzed: 05/05/16 | | | | | | |
| Acetone | **0.0858** | 0.050 | mg/kg | 0.10 | | 85.8 | 70-130 | | | |
| tert-Amyl Methyl Ether (TAME) | **0.0363** | 0.0050 | mg/kg | 0.040 | | 90.7 | 70-130 | | | |
| Benzene | **0.0401** | 0.0020 | mg/kg | 0.040 | | 100 | 75-125 | | | |
| Bromobenzene | **0.0412** | 0.0050 | mg/kg | 0.040 | | 103 | 70-130 | | | |
| Bromochloromethane | **0.0379** | 0.0050 | mg/kg | 0.040 | | 94.8 | 70-130 | | | |
| Bromodichloromethane | **0.0396** | 0.0050 | mg/kg | 0.040 | | 98.9 | 75-125 | | | |
| Bromoform | **0.0369** | 0.0050 | mg/kg | 0.040 | | 92.2 | 75-125 | | | |
| Bromomethane | **0.0394** | 0.0050 | mg/kg | 0.040 | | 98.4 | 75-125 | | | |
| 2-Butanone (MEK) | **0.0858** | 0.050 | mg/kg | 0.10 | | 85.8 | 70-130 | | | |
| tert-Butyl alcohol (TBA) | **0.180** | 0.020 | mg/kg | 0.20 | | 90.2 | 70-130 | | | |
| sec-Butylbenzene | **0.0434** | 0.0050 | mg/kg | 0.040 | | 108 | 70-130 | | | |
| tert-Butylbenzene | **0.0433** | 0.0050 | mg/kg | 0.040 | | 108 | 70-130 | | | |

**Viorel Vasile**
Operations Manager

# LABORATORY ANALYSIS RESULTS

**Client:** Stantec (TO)
**Project No:** 2057123300
**Project Name:** Grayson Power Plant Glendale Phase II

**AA Project No:** A732176
**Date Received:** 04/28/16
**Date Reported:** 05/12/16

## VOCs, OXY & TPHG by GC/MS EPA 5035 - Quality Control

*Batch B6E0522 - EPA 5035*

**LCS (B6E0522-BS1) Continued** — Prepared & Analyzed: 05/05/16

| Analyte | Result | Reporting Limit | Units | Spike Level | Source Result | %REC | %REC Limits | RPD | RPD Limit | Notes |
|---|---|---|---|---|---|---|---|---|---|---|
| n-Butylbenzene | **0.0451** | 0.0050 | mg/kg | 0.040 | | 113 | 70-130 | | | |
| Carbon Disulfide | **0.0979** | 0.0050 | mg/kg | 0.10 | | 97.9 | 70-130 | | | |
| Carbon Tetrachloride | **0.0424** | 0.0050 | mg/kg | 0.040 | | 106 | 75-125 | | | |
| Chlorobenzene | **0.0411** | 0.0050 | mg/kg | 0.040 | | 103 | 75-125 | | | |
| Chloroethane | **0.0451** | 0.0050 | mg/kg | 0.040 | | 113 | 75-125 | | | |
| Chloroform | **0.0408** | 0.0050 | mg/kg | 0.040 | | 102 | 75-125 | | | |
| Chloromethane | **0.0479** | 0.0050 | mg/kg | 0.040 | | 120 | 65-125 | | | |
| 2-Chlorotoluene | **0.0430** | 0.0050 | mg/kg | 0.040 | | 107 | 70-130 | | | |
| 4-Chlorotoluene | **0.0454** | 0.0050 | mg/kg | 0.040 | | 113 | 70-130 | | | |
| 1,2-Dibromo-3-chloropropane | **0.0338** | 0.010 | mg/kg | 0.040 | | 84.5 | 70-130 | | | |
| Dibromochloromethane | **0.0388** | 0.0050 | mg/kg | 0.040 | | 97.1 | 75-125 | | | |
| 1,2-Dibromoethane (EDB) | **0.0375** | 0.0050 | mg/kg | 0.040 | | 93.8 | 70-130 | | | |
| Dibromomethane | **0.0378** | 0.0050 | mg/kg | 0.040 | | 94.5 | 70-130 | | | |
| 1,4-Dichlorobenzene | **0.0413** | 0.0050 | mg/kg | 0.040 | | 103 | 75-125 | | | |
| 1,3-Dichlorobenzene | **0.0412** | 0.0050 | mg/kg | 0.040 | | 103 | 70-130 | | | |
| 1,2-Dichlorobenzene | **0.0412** | 0.0050 | mg/kg | 0.040 | | 103 | 70-130 | | | |
| Dichlorodifluoromethane (R12) | **0.0425** | 0.0050 | mg/kg | 0.040 | | 106 | 70-130 | | | |
| 1,1-Dichloroethane | **0.0421** | 0.0050 | mg/kg | 0.040 | | 105 | 70-125 | | | |
| 1,2-Dichloroethane (EDC) | **0.0388** | 0.0050 | mg/kg | 0.040 | | 97.0 | 75-125 | | | |
| trans-1,2-Dichloroethylene | **0.0401** | 0.0050 | mg/kg | 0.040 | | 100 | 75-125 | | | |
| cis-1,2-Dichloroethylene | **0.0386** | 0.0050 | mg/kg | 0.040 | | 96.6 | 75-125 | | | |
| 1,1-Dichloroethylene | **0.0391** | 0.0050 | mg/kg | 0.040 | | 97.8 | 70-130 | | | |
| 2,2-Dichloropropane | **0.0410** | 0.0050 | mg/kg | 0.040 | | 103 | 70-130 | | | |
| 1,3-Dichloropropane | **0.0386** | 0.0050 | mg/kg | 0.040 | | 96.6 | 70-130 | | | |
| 1,2-Dichloropropane | **0.0405** | 0.0050 | mg/kg | 0.040 | | 101 | 75-130 | | | |
| trans-1,3-Dichloropropylene | **0.0401** | 0.0050 | mg/kg | 0.040 | | 100 | 70-130 | | | |
| 1,1-Dichloropropylene | **0.0404** | 0.0050 | mg/kg | 0.040 | | 101 | 70-130 | | | |
| cis-1,3-Dichloropropylene | **0.0394** | 0.0050 | mg/kg | 0.040 | | 98.6 | 75-125 | | | |
| Diisopropyl ether (DIPE) | **0.0387** | 0.0050 | mg/kg | 0.040 | | 96.6 | 70-130 | | | |
| Ethylbenzene | **0.0426** | 0.0020 | mg/kg | 0.040 | | 107 | 75-125 | | | |
| Ethyl-tert-Butyl Ether (ETBE) | **0.0384** | 0.0050 | mg/kg | 0.040 | | 96.1 | 70-130 | | | |

**Viorel Vasile**
Operations Manager

# LABORATORY ANALYSIS RESULTS

**Client:** Stantec (TO)
**Project No:** 2057123300
**Project Name:** Grayson Power Plant Glendale Phase II

**AA Project No:** A732176
**Date Received:** 04/28/16
**Date Reported:** 05/12/16

## VOCs, OXY & TPHG by GC/MS EPA 5035 - Quality Control

*Batch B6E0522 - EPA 5035*

**LCS (B6E0522-BS1) Continued** — Prepared & Analyzed: 05/05/16

| Analyte | Result | Reporting Limit | Units | Spike Level | Source Result | %REC | %REC Limits | RPD | RPD Limit | Notes |
|---|---|---|---|---|---|---|---|---|---|---|
| Gasoline Range Organics (GRO) | **1.09** | 0.50 | mg/kg | 1.0 | | 109 | 70-130 | | | |
| Hexachlorobutadiene | **0.0433** | 0.010 | mg/kg | 0.040 | | 108 | 70-130 | | | |
| 2-Hexanone (MBK) | **0.0966** | 0.050 | mg/kg | 0.10 | | 96.6 | 70-130 | | | |
| Isopropylbenzene | **0.0438** | 0.0050 | mg/kg | 0.040 | | 110 | 70-130 | | | |
| 4-Isopropyltoluene | **0.0432** | 0.0050 | mg/kg | 0.040 | | 108 | 70-130 | | | |
| Methyl-tert-Butyl Ether (MTBE) | **0.0743** | 0.0050 | mg/kg | 0.080 | | 92.8 | 75-125 | | | |
| Methylene Chloride | **0.0402** | 0.050 | mg/kg | 0.040 | | 101 | 75-130 | | | |
| 4-Methyl-2-pentanone (MIBK) | **0.0887** | 0.050 | mg/kg | 0.10 | | 88.7 | 70-130 | | | |
| Naphthalene | **0.0377** | 0.010 | mg/kg | 0.040 | | 94.2 | 70-130 | | | |
| n-Propylbenzene | **0.0459** | 0.0050 | mg/kg | 0.040 | | 115 | 70-130 | | | |
| Styrene | **0.0405** | 0.0050 | mg/kg | 0.040 | | 101 | 70-130 | | | |
| 1,1,1,2-Tetrachloroethane | **0.0403** | 0.0050 | mg/kg | 0.040 | | 101 | 70-130 | | | |
| 1,1,2,2-Tetrachloroethane | **0.0367** | 0.0050 | mg/kg | 0.040 | | 91.7 | 70-135 | | | |
| Tetrachloroethylene (PCE) | **0.0423** | 0.0050 | mg/kg | 0.040 | | 106 | 75-125 | | | |
| Toluene | **0.0403** | 0.0020 | mg/kg | 0.040 | | 101 | 75-125 | | | |
| 1,2,4-Trichlorobenzene | **0.0411** | 0.0050 | mg/kg | 0.040 | | 103 | 70-130 | | | |
| 1,2,3-Trichlorobenzene | **0.0393** | 0.0050 | mg/kg | 0.040 | | 98.2 | 70-130 | | | |
| 1,1,2-Trichloroethane | **0.0389** | 0.0050 | mg/kg | 0.040 | | 97.4 | 75-125 | | | |
| 1,1,1-Trichloroethane | **0.0414** | 0.0050 | mg/kg | 0.040 | | 104 | 75-125 | | | |
| Trichloroethylene (TCE) | **0.0413** | 0.0050 | mg/kg | 0.040 | | 103 | 75-125 | | | |
| Trichlorofluoromethane (R11) | **0.0490** | 0.0050 | mg/kg | 0.040 | | 122 | 70-130 | | | |
| 1,2,3-Trichloropropane | **0.0368** | 0.0050 | mg/kg | 0.040 | | 92.0 | 70-130 | | | |
| 1,1,2-Trichloro-1,2,2-trifluoroethane (R113) | **0.0998** | 0.0050 | mg/kg | 0.080 | | 125 | 70-130 | | | |
| 1,3,5-Trimethylbenzene | **0.0427** | 0.0050 | mg/kg | 0.040 | | 107 | 70-130 | | | |
| 1,2,4-Trimethylbenzene | **0.0422** | 0.0050 | mg/kg | 0.040 | | 106 | 70-130 | | | |
| Vinyl chloride | **0.0453** | 0.0050 | mg/kg | 0.040 | | 113 | 75-125 | | | |
| o-Xylene | **0.0409** | 0.0020 | mg/kg | 0.040 | | 102 | 75-125 | | | |
| m,p-Xylenes | **0.0821** | 0.0020 | mg/kg | 0.080 | | 103 | 70-130 | | | |
| *Surrogate: 4-Bromofluorobenzene* | *0.103* | | *mg/kg* | *0.10* | | *103* | *70-140* | | | |
| *Surrogate: Dibromofluoromethane* | *0.0978* | | *mg/kg* | *0.10* | | *97.8* | *70-140* | | | |

**Viorel Vasile**
Operations Manager

# LABORATORY ANALYSIS RESULTS

**Client:** Stantec (TO)
**Project No:** 2057123300
**Project Name:** Grayson Power Plant Glendale Phase II

**AA Project No:** A732176
**Date Received:** 04/28/16
**Date Reported:** 05/12/16

| Analyte | Result | Reporting Limit | Units | Spike Level | Source Result | %REC | %REC Limits | RPD | RPD Limit | Notes |
|---|---|---|---|---|---|---|---|---|---|---|
| **VOCs, OXY & TPHG by GC/MS EPA 5035 - Quality Control** | | | | | | | | | | |
| *Batch B6E0522 - EPA 5035* | | | | | | | | | | |
| **LCS (B6E0522-BS1) Continued** | | | | Prepared & Analyzed: 05/05/16 | | | | | | |
| *Surrogate: Toluene-d8* | *0.102* | | *mg/kg* | *0.10* | | *102* | *70-140* | | | |
| **LCS Dup (B6E0522-BSD1)** | | | | Prepared & Analyzed: 05/05/16 | | | | | | |
| Acetone | **0.0788** | 0.050 | mg/kg | 0.10 | | 78.8 | 70-130 | 8.48 | 30 | |
| tert-Amyl Methyl Ether (TAME) | **0.0377** | 0.0050 | mg/kg | 0.040 | | 94.2 | 70-130 | 3.84 | 30 | |
| Benzene | **0.0424** | 0.0020 | mg/kg | 0.040 | | 106 | 75-125 | 5.52 | 30 | |
| Bromobenzene | **0.0397** | 0.0050 | mg/kg | 0.040 | | 99.2 | 70-130 | 3.91 | 30 | |
| Bromochloromethane | **0.0396** | 0.0050 | mg/kg | 0.040 | | 99.0 | 70-130 | 4.34 | 30 | |
| Bromodichloromethane | **0.0438** | 0.0050 | mg/kg | 0.040 | | 110 | 75-125 | 10.2 | 30 | |
| Bromoform | **0.0382** | 0.0050 | mg/kg | 0.040 | | 95.4 | 75-125 | 3.41 | 30 | |
| Bromomethane | **0.0429** | 0.0050 | mg/kg | 0.040 | | 107 | 75-125 | 8.61 | 30 | |
| 2-Butanone (MEK) | **0.0918** | 0.050 | mg/kg | 0.10 | | 91.8 | 70-130 | 6.71 | 30 | |
| tert-Butyl alcohol (TBA) | **0.200** | 0.020 | mg/kg | 0.20 | | 100 | 70-130 | 10.4 | 30 | |
| sec-Butylbenzene | **0.0408** | 0.0050 | mg/kg | 0.040 | | 102 | 70-130 | 6.13 | 30 | |
| tert-Butylbenzene | **0.0414** | 0.0050 | mg/kg | 0.040 | | 104 | 70-130 | 4.44 | 30 | |
| n-Butylbenzene | **0.0419** | 0.0050 | mg/kg | 0.040 | | 105 | 70-130 | 7.36 | 30 | |
| Carbon Disulfide | **0.0953** | 0.0050 | mg/kg | 0.10 | | 95.3 | 70-130 | 2.69 | 30 | |
| Carbon Tetrachloride | **0.0436** | 0.0050 | mg/kg | 0.040 | | 109 | 75-125 | 2.70 | 30 | |
| Chlorobenzene | **0.0401** | 0.0050 | mg/kg | 0.040 | | 100 | 75-125 | 2.36 | 30 | |
| Chloroethane | **0.0447** | 0.0050 | mg/kg | 0.040 | | 112 | 75-125 | 0.936 | 30 | |
| Chloroform | **0.0450** | 0.0050 | mg/kg | 0.040 | | 112 | 75-125 | 9.60 | 30 | |
| Chloromethane | **0.0495** | 0.0050 | mg/kg | 0.040 | | 124 | 65-125 | 3.28 | 30 | |
| 2-Chlorotoluene | **0.0413** | 0.0050 | mg/kg | 0.040 | | 103 | 70-130 | 3.89 | 30 | |
| 4-Chlorotoluene | **0.0430** | 0.0050 | mg/kg | 0.040 | | 108 | 70-130 | 5.39 | 30 | |
| 1,2-Dibromo-3-chloropropane | **0.0357** | 0.010 | mg/kg | 0.040 | | 89.4 | 70-130 | 5.58 | 30 | |
| Dibromochloromethane | **0.0397** | 0.0050 | mg/kg | 0.040 | | 99.3 | 75-125 | 2.19 | 30 | |
| 1,2-Dibromoethane (EDB) | **0.0393** | 0.0050 | mg/kg | 0.040 | | 98.2 | 70-130 | 4.58 | 30 | |
| Dibromomethane | **0.0409** | 0.0050 | mg/kg | 0.040 | | 102 | 70-130 | 7.93 | 30 | |
| 1,4-Dichlorobenzene | **0.0394** | 0.0050 | mg/kg | 0.040 | | 98.4 | 75-125 | 4.71 | 30 | |
| 1,3-Dichlorobenzene | **0.0386** | 0.0050 | mg/kg | 0.040 | | 96.5 | 70-130 | 6.47 | 30 | |
| 1,2-Dichlorobenzene | **0.0398** | 0.0050 | mg/kg | 0.040 | | 99.4 | 70-130 | 3.56 | 30 | |
| Dichlorodifluoromethane (R12) | **0.0390** | 0.0050 | mg/kg | 0.040 | | 97.6 | 70-130 | 8.49 | 30 | |

**Viorel Vasile**
Operations Manager

# LABORATORY ANALYSIS RESULTS

**Client:** Stantec (TO)
**Project No:** 2057123300
**Project Name:** Grayson Power Plant Glendale Phase II

**AA Project No:** A732176
**Date Received:** 04/28/16
**Date Reported:** 05/12/16

## VOCs, OXY & TPHG by GC/MS EPA 5035 - Quality Control

*Batch B6E0522 - EPA 5035*

**LCS Dup (B6E0522-BSD1) Continued** — Prepared & Analyzed: 05/05/16

| Analyte | Result | Reporting Limit | Units | Spike Level | Source Result | %REC | %REC Limits | RPD | RPD Limit | Notes |
|---|---|---|---|---|---|---|---|---|---|---|
| 1,1-Dichloroethane | **0.0445** | 0.0050 | mg/kg | 0.040 | | 111 | 70-125 | 5.64 | 30 | |
| 1,2-Dichloroethane (EDC) | **0.0457** | 0.0050 | mg/kg | 0.040 | | 114 | 75-125 | 16.3 | 30 | |
| trans-1,2-Dichloroethylene | **0.0401** | 0.0050 | mg/kg | 0.040 | | 100 | 75-125 | 0.0997 | 30 | |
| cis-1,2-Dichloroethylene | **0.0410** | 0.0050 | mg/kg | 0.040 | | 102 | 75-125 | 5.93 | 30 | |
| 1,1-Dichloroethylene | **0.0408** | 0.0050 | mg/kg | 0.040 | | 102 | 70-130 | 4.20 | 30 | |
| 2,2-Dichloropropane | **0.0428** | 0.0050 | mg/kg | 0.040 | | 107 | 70-130 | 4.25 | 30 | |
| 1,3-Dichloropropane | **0.0407** | 0.0050 | mg/kg | 0.040 | | 102 | 70-130 | 5.19 | 30 | |
| 1,2-Dichloropropane | **0.0447** | 0.0050 | mg/kg | 0.040 | | 112 | 75-130 | 9.95 | 30 | |
| trans-1,3-Dichloropropylene | **0.0417** | 0.0050 | mg/kg | 0.040 | | 104 | 70-130 | 3.81 | 30 | |
| 1,1-Dichloropropylene | **0.0425** | 0.0050 | mg/kg | 0.040 | | 106 | 70-130 | 5.12 | 30 | |
| cis-1,3-Dichloropropylene | **0.0429** | 0.0050 | mg/kg | 0.040 | | 107 | 75-125 | 8.45 | 30 | |
| Diisopropyl ether (DIPE) | **0.0434** | 0.0050 | mg/kg | 0.040 | | 109 | 70-130 | 11.6 | 30 | |
| Ethylbenzene | **0.0416** | 0.0020 | mg/kg | 0.040 | | 104 | 75-125 | 2.33 | 30 | |
| Ethyl-tert-Butyl Ether (ETBE) | **0.0418** | 0.0050 | mg/kg | 0.040 | | 104 | 70-130 | 8.37 | 30 | |
| Gasoline Range Organics (GRO) | **1.11** | 0.50 | mg/kg | 1.0 | | 111 | 70-130 | 1.88 | 30 | |
| Hexachlorobutadiene | **0.0394** | 0.010 | mg/kg | 0.040 | | 98.6 | 70-130 | 9.29 | 30 | |
| 2-Hexanone (MBK) | **0.104** | 0.050 | mg/kg | 0.10 | | 104 | 70-130 | 7.00 | 30 | |
| Isopropylbenzene | **0.0416** | 0.0050 | mg/kg | 0.040 | | 104 | 70-130 | 5.15 | 30 | |
| 4-Isopropyltoluene | **0.0407** | 0.0050 | mg/kg | 0.040 | | 102 | 70-130 | 6.10 | 30 | |
| Methyl-tert-Butyl Ether (MTBE) | **0.0825** | 0.0050 | mg/kg | 0.080 | | 103 | 75-125 | 10.6 | 30 | |
| Methylene Chloride | **0.0388** | 0.050 | mg/kg | 0.040 | | 97.0 | 75-130 | 3.65 | 30 | |
| 4-Methyl-2-pentanone (MIBK) | **0.0930** | 0.050 | mg/kg | 0.10 | | 93.0 | 70-130 | 4.73 | 30 | |
| Naphthalene | **0.0384** | 0.010 | mg/kg | 0.040 | | 96.1 | 70-130 | 1.94 | 30 | |
| n-Propylbenzene | **0.0437** | 0.0050 | mg/kg | 0.040 | | 109 | 70-130 | 5.00 | 30 | |
| Styrene | **0.0412** | 0.0050 | mg/kg | 0.040 | | 103 | 70-130 | 1.67 | 30 | |
| 1,1,1,2-Tetrachloroethane | **0.0399** | 0.0050 | mg/kg | 0.040 | | 99.6 | 70-130 | 1.05 | 30 | |
| 1,1,2,2-Tetrachloroethane | **0.0378** | 0.0050 | mg/kg | 0.040 | | 94.6 | 70-135 | 3.06 | 30 | |
| Tetrachloroethylene (PCE) | **0.0395** | 0.0050 | mg/kg | 0.040 | | 98.8 | 75-125 | 6.75 | 30 | |
| Toluene | **0.0389** | 0.0020 | mg/kg | 0.040 | | 97.3 | 75-125 | 3.58 | 30 | |
| 1,2,4-Trichlorobenzene | **0.0391** | 0.0050 | mg/kg | 0.040 | | 97.6 | 70-130 | 4.99 | 30 | |
| 1,2,3-Trichlorobenzene | **0.0377** | 0.0050 | mg/kg | 0.040 | | 94.4 | 70-130 | 3.95 | 30 | |

**Viorel Vasile**
Operations Manager

# LABORATORY ANALYSIS RESULTS

**Client:** Stantec (TO)
**Project No:** 2057123300
**Project Name:** Grayson Power Plant Glendale Phase II

**AA Project No:** A732176
**Date Received:** 04/28/16
**Date Reported:** 05/12/16

| Analyte | Result | Reporting Limit | Units | Spike Level | Source Result | %REC | %REC Limits | RPD | RPD Limit | Notes |
|---|---|---|---|---|---|---|---|---|---|---|
| **VOCs, OXY & TPHG by GC/MS EPA 5035 - Quality Control** | | | | | | | | | | |
| *Batch B6E0522 - EPA 5035* | | | | | | | | | | |
| **LCS Dup (B6E0522-BSD1) Continued** | | | | Prepared & Analyzed: 05/05/16 | | | | | | |
| 1,1,2-Trichloroethane | **0.0408** | 0.0050 | mg/kg | 0.040 | | 102 | 75-125 | 4.71 | 30 | |
| 1,1,1-Trichloroethane | **0.0441** | 0.0050 | mg/kg | 0.040 | | 110 | 75-125 | 6.32 | 30 | |
| Trichloroethylene (TCE) | **0.0428** | 0.0050 | mg/kg | 0.040 | | 107 | 75-125 | 3.38 | 30 | |
| Trichlorofluoromethane (R11) | **0.0499** | 0.0050 | mg/kg | 0.040 | | 125 | 70-130 | 1.74 | 30 | |
| 1,2,3-Trichloropropane | **0.0391** | 0.0050 | mg/kg | 0.040 | | 97.7 | 70-130 | 5.96 | 30 | |
| 1,1,2-Trichloro-1,2,2-trifluoroethane (R113) | **0.102** | 0.0050 | mg/kg | 0.080 | | 127 | 70-130 | 1.98 | 30 | |
| 1,3,5-Trimethylbenzene | **0.0413** | 0.0050 | mg/kg | 0.040 | | 103 | 70-130 | 3.33 | 30 | |
| 1,2,4-Trimethylbenzene | **0.0408** | 0.0050 | mg/kg | 0.040 | | 102 | 70-130 | 3.47 | 30 | |
| Vinyl chloride | **0.0469** | 0.0050 | mg/kg | 0.040 | | 117 | 75-125 | 3.43 | 30 | |
| o-Xylene | **0.0409** | 0.0020 | mg/kg | 0.040 | | 102 | 75-125 | 0.0978 | 30 | |
| m,p-Xylenes | **0.0803** | 0.0020 | mg/kg | 0.080 | | 100 | 70-130 | 2.14 | 30 | |
| *Surrogate: 4-Bromofluorobenzene* | *0.105* | | *mg/kg* | *0.10* | | *105* | *70-140* | | | |
| *Surrogate: Dibromofluoromethane* | *0.107* | | *mg/kg* | *0.10* | | *107* | *70-140* | | | |
| *Surrogate: Toluene-d8* | *0.102* | | *mg/kg* | *0.10* | | *102* | *70-140* | | | |
| **Carbon Chain by GC/FID - Quality Control** | | | | | | | | | | |
| *Batch B6E0322 - EPA 3510C* | | | | | | | | | | |
| **Blank (B6E0322-BLK1)** | | | | Prepared & Analyzed: 05/03/16 | | | | | | |
| C6-C8 | <0.010 | 0.010 | mg/L | | | | | | | |
| C8-C10 | <0.010 | 0.010 | mg/L | | | | | | | |
| C10-C12 | <0.010 | 0.010 | mg/L | | | | | | | |
| C12-C14 | <0.010 | 0.010 | mg/L | | | | | | | |
| C14-C16 | <0.010 | 0.010 | mg/L | | | | | | | |
| C16-C18 | <0.010 | 0.010 | mg/L | | | | | | | |
| C18-C20 | <0.010 | 0.010 | mg/L | | | | | | | |
| C20-C22 | <0.010 | 0.010 | mg/L | | | | | | | |
| C22-C24 | <0.010 | 0.010 | mg/L | | | | | | | |
| C24-C26 | <0.010 | 0.010 | mg/L | | | | | | | |
| C26-C28 | <0.010 | 0.010 | mg/L | | | | | | | |
| C28-C32 | <0.010 | 0.010 | mg/L | | | | | | | |
| C32-C34 | <0.010 | 0.010 | mg/L | | | | | | | |

**Viorel Vasile**
Operations Manager

# LABORATORY ANALYSIS RESULTS

**Client:** Stantec (TO)
**Project No:** 2057123300
**Project Name:** Grayson Power Plant Glendale Phase II

**AA Project No:** A732176
**Date Received:** 04/28/16
**Date Reported:** 05/12/16

| Analyte | Result | Reporting Limit | Units | Spike Level | Source Result | %REC | %REC Limits | RPD | RPD Limit | Notes |
|---|---|---|---|---|---|---|---|---|---|---|
| **Carbon Chain by GC/FID - Quality Control** | | | | | | | | | | |
| *Batch B6E0322 - EPA 3510C* | | | | | | | | | | |
| **Blank (B6E0322-BLK1) Continued** | | | | Prepared & Analyzed: 05/03/16 | | | | | | |
| C34-C36 | <0.010 | 0.010 | mg/L | | | | | | | |
| C36-C40 | <0.010 | 0.010 | mg/L | | | | | | | |
| C40-C44 | <0.010 | 0.010 | mg/L | | | | | | | |
| TPH (C6-C44) | <0.10 | 0.10 | mg/L | | | | | | | |
| *Surrogate: o-Terphenyl* | *0.0499* | | *mg/L* | *0.040* | | *125* | *50-150* | | | |
| **LCS (B6E0322-BS1)** | | | | Prepared & Analyzed: 05/03/16 | | | | | | |
| Diesel Range Organics as Diesel | **0.802** | 0.10 | mg/L | 0.80 | | 100 | 75-125 | | | |
| *Surrogate: o-Terphenyl* | *0.0494* | | *mg/L* | *0.040* | | *124* | *50-150* | | | |
| **LCS Dup (B6E0322-BSD1)** | | | | Prepared & Analyzed: 05/03/16 | | | | | | |
| Diesel Range Organics as Diesel | **0.756** | 0.10 | mg/L | 0.80 | | 94.5 | 75-125 | 5.98 | 30 | |
| *Surrogate: o-Terphenyl* | *0.0501* | | *mg/L* | *0.040* | | *125* | *50-150* | | | |
| *Batch B6E0340 - EPA 3550B* | | | | | | | | | | |
| **Blank (B6E0340-BLK1)** | | | | Prepared & Analyzed: 05/03/16 | | | | | | |
| C6-C8 | <1.0 | 1.0 | mg/kg | | | | | | | |
| C8-C10 | <1.0 | 1.0 | mg/kg | | | | | | | |
| C10-C12 | <1.0 | 1.0 | mg/kg | | | | | | | |
| C12-C14 | <1.0 | 1.0 | mg/kg | | | | | | | |
| C14-C16 | <1.0 | 1.0 | mg/kg | | | | | | | |
| C16-C18 | <1.0 | 1.0 | mg/kg | | | | | | | |
| C18-C20 | <1.0 | 1.0 | mg/kg | | | | | | | |
| C20-C22 | <1.0 | 1.0 | mg/kg | | | | | | | |
| C22-C24 | <1.0 | 1.0 | mg/kg | | | | | | | |
| C24-C26 | <1.0 | 1.0 | mg/kg | | | | | | | |
| C26-C28 | <1.0 | 1.0 | mg/kg | | | | | | | |
| C28-C32 | <1.0 | 1.0 | mg/kg | | | | | | | |
| C32-C34 | <1.0 | 1.0 | mg/kg | | | | | | | |
| C34-C36 | <1.0 | 1.0 | mg/kg | | | | | | | |
| C36-C40 | <1.0 | 1.0 | mg/kg | | | | | | | |
| C40-C44 | <1.0 | 1.0 | mg/kg | | | | | | | |
| TPH (C6-C44) | <10 | 10 | mg/kg | | | | | | | |

**Viorel Vasile**
Operations Manager

# LABORATORY ANALYSIS RESULTS

**Client:** Stantec (TO)
**Project No:** 2057123300
**Project Name:** Grayson Power Plant Glendale Phase II

**AA Project No:** A732176
**Date Received:** 04/28/16
**Date Reported:** 05/12/16

| Analyte | Result | Reporting Limit | Units | Spike Level | Source Result | %REC | %REC Limits | RPD | RPD Limit | Notes |
|---|---|---|---|---|---|---|---|---|---|---|
| **Carbon Chain by GC/FID - Quality Control** | | | | | | | | | | |
| *Batch B6E0340 - EPA 3550B* | | | | | | | | | | |
| **Blank (B6E0340-BLK1) Continued** | | | | Prepared & Analyzed: 05/03/16 | | | | | | |
| *Surrogate: o-Terphenyl* | *10.7* | | *mg/kg* | *10* | | *107* | *50-150* | | | |
| **LCS (B6E0340-BS1)** | | | | Prepared & Analyzed: 05/03/16 | | | | | | |
| Diesel Range Organics as Diesel | **198** | 10 | mg/kg | 200 | | 99.1 | 75-125 | | | |
| *Surrogate: o-Terphenyl* | *11.8* | | *mg/kg* | *10* | | *118* | *50-150* | | | |
| **LCS Dup (B6E0340-BSD1)** | | | | Prepared & Analyzed: 05/03/16 | | | | | | |
| Diesel Range Organics as Diesel | **191** | 10 | mg/kg | 200 | | 95.3 | 75-125 | 3.91 | 40 | |
| *Surrogate: o-Terphenyl* | *11.8* | | *mg/kg* | *10* | | *118* | *50-150* | | | |
| **Matrix Spike (B6E0340-MS1)** | | **Source: 6D28026-04** | | Prepared & Analyzed: 05/03/16 | | | | | | |
| Diesel Range Organics as Diesel | **199** | 10 | mg/kg | 200 | | 99.7 | 70-130 | | | |
| *Surrogate: o-Terphenyl* | *12.9* | | *mg/kg* | *10* | | *129* | *50-150* | | | |
| **Matrix Spike Dup (B6E0340-MSD1)** | | **Source: 6D28026-04** | | Prepared & Analyzed: 05/03/16 | | | | | | |
| Diesel Range Organics as Diesel | **196** | 10 | mg/kg | 200 | | 98.0 | 70-130 | 1.69 | 40 | |
| *Surrogate: o-Terphenyl* | *13.1* | | *mg/kg* | *10* | | *131* | *50-150* | | | |
| **Total Metals CAM 17 - Quality Control** | | | | | | | | | | |
| *Batch B6E0220 - EPA 3050B* | | | | | | | | | | |
| **Blank (B6E0220-BLK1)** | | | | Prepared: 05/02/16 Analyzed: 05/03/16 | | | | | | |
| Antimony | <10 | 10 | mg/kg | | | | | | | |
| Arsenic | <0.50 | 0.50 | mg/kg | | | | | | | |
| Barium | <10 | 10 | mg/kg | | | | | | | |
| Beryllium | <1.0 | 1.0 | mg/kg | | | | | | | |
| Cadmium | <1.0 | 1.0 | mg/kg | | | | | | | |
| Chromium | <3.0 | 3.0 | mg/kg | | | | | | | |
| Cobalt | <3.0 | 3.0 | mg/kg | | | | | | | |
| Copper | <3.0 | 3.0 | mg/kg | | | | | | | |
| Lead | <3.0 | 3.0 | mg/kg | | | | | | | |
| Molybdenum | <5.0 | 5.0 | mg/kg | | | | | | | |
| Nickel | <3.0 | 3.0 | mg/kg | | | | | | | |
| Selenium | <0.50 | 0.50 | mg/kg | | | | | | | |
| Silver | <1.0 | 1.0 | mg/kg | | | | | | | |

**Viorel Vasile**
Operations Manager

# LABORATORY ANALYSIS RESULTS

**Client:** Stantec (TO)
**Project No:** 2057123300
**Project Name:** Grayson Power Plant Glendale Phase II

**AA Project No:** A732176
**Date Received:** 04/28/16
**Date Reported:** 05/12/16

| Analyte | Result | Reporting Limit | Units | Spike Level | Source Result | %REC | %REC Limits | RPD | RPD Limit | Notes |
|---|---|---|---|---|---|---|---|---|---|---|
| **Total Metals CAM 17 - Quality Control** | | | | | | | | | | |
| *Batch B6E0220 - EPA 3050B* | | | | | | | | | | |
| **Blank (B6E0220-BLK1) Continued** | | | | Prepared: 05/02/16 Analyzed: 05/03/16 | | | | | | |
| Thallium | <5.0 | 5.0 | mg/kg | | | | | | | |
| Vanadium | <10 | 10 | mg/kg | | | | | | | |
| Zinc | <3.0 | 3.0 | mg/kg | | | | | | | |
| **LCS (B6E0220-BS1)** | | | | Prepared: 05/02/16 Analyzed: 05/03/16 | | | | | | |
| Antimony | **48.9** | 10 | mg/kg | 50 | | 97.9 | 80-120 | | | |
| Arsenic | **48.8** | 0.50 | mg/kg | 50 | | 97.6 | 80-120 | | | |
| Barium | **52.1** | 10 | mg/kg | 50 | | 104 | 80-120 | | | |
| Beryllium | **50.6** | 1.0 | mg/kg | 50 | | 101 | 80-120 | | | |
| Cadmium | **50.9** | 1.0 | mg/kg | 50 | | 102 | 80-120 | | | |
| Chromium | **50.6** | 3.0 | mg/kg | 50 | | 101 | 80-120 | | | |
| Cobalt | **50.8** | 3.0 | mg/kg | 50 | | 102 | 80-120 | | | |
| Copper | **50.6** | 3.0 | mg/kg | 50 | | 101 | 80-120 | | | |
| Lead | **50.2** | 3.0 | mg/kg | 50 | | 100 | 80-120 | | | |
| Molybdenum | **50.2** | 5.0 | mg/kg | 50 | | 100 | 80-120 | | | |
| Nickel | **51.0** | 3.0 | mg/kg | 50 | | 102 | 80-120 | | | |
| Selenium | **51.4** | 0.50 | mg/kg | 50 | | 103 | 80-120 | | | |
| Silver | **50.6** | 1.0 | mg/kg | 50 | | 101 | 80-120 | | | |
| Thallium | **47.0** | 5.0 | mg/kg | 50 | | 94.0 | 80-120 | | | |
| Vanadium | **50.0** | 10 | mg/kg | 50 | | 100 | 80-120 | | | |
| Zinc | **51.3** | 3.0 | mg/kg | 50 | | 103 | 80-120 | | | |
| **LCS Dup (B6E0220-BSD1)** | | | | Prepared: 05/02/16 Analyzed: 05/03/16 | | | | | | |
| Antimony | **49.5** | 10 | mg/kg | 50 | | 99.1 | 80-120 | 1.24 | 20 | |
| Arsenic | **49.7** | 0.50 | mg/kg | 50 | | 99.4 | 80-120 | 1.83 | 20 | |
| Barium | **51.8** | 10 | mg/kg | 50 | | 104 | 80-120 | 0.674 | 20 | |
| Beryllium | **50.7** | 1.0 | mg/kg | 50 | | 101 | 80-120 | 0.296 | 20 | |
| Cadmium | **50.8** | 1.0 | mg/kg | 50 | | 102 | 80-120 | 0.197 | 20 | |
| Chromium | **50.6** | 3.0 | mg/kg | 50 | | 101 | 80-120 | 0.00 | 20 | |
| Cobalt | **50.6** | 3.0 | mg/kg | 50 | | 101 | 80-120 | 0.493 | 20 | |
| Copper | **50.8** | 3.0 | mg/kg | 50 | | 102 | 80-120 | 0.197 | 20 | |
| Lead | **51.1** | 3.0 | mg/kg | 50 | | 102 | 80-120 | 1.88 | 20 | |
| Molybdenum | **50.4** | 5.0 | mg/kg | 50 | | 101 | 80-120 | 0.497 | 20 | |

**Viorel Vasile**
Operations Manager

# LABORATORY ANALYSIS RESULTS

**Client:** Stantec (TO)
**Project No:** 2057123300
**Project Name:** Grayson Power Plant Glendale Phase II

**AA Project No:** A732176
**Date Received:** 04/28/16
**Date Reported:** 05/12/16

| Analyte | Result | Reporting Limit | Units | Spike Level | Source Result | %REC | %REC Limits | RPD | RPD Limit | Notes |
|---|---|---|---|---|---|---|---|---|---|---|
| **Total Metals CAM 17 - Quality Control** | | | | | | | | | | |
| *Batch B6E0220 - EPA 3050B* | | | | | | | | | | |
| **LCS Dup (B6E0220-BSD1) Continued** | | | | Prepared: 05/02/16 Analyzed: 05/03/16 | | | | | | |
| Nickel | **50.5** | 3.0 | mg/kg | 50 | | 101 | 80-120 | 0.887 | 20 | |
| Selenium | **51.2** | 0.50 | mg/kg | 50 | | 102 | 80-120 | 0.390 | 20 | |
| Silver | **50.2** | 1.0 | mg/kg | 50 | | 100 | 80-120 | 0.793 | 20 | |
| Thallium | **49.0** | 5.0 | mg/kg | 50 | | 97.9 | 80-120 | 4.08 | 20 | |
| Vanadium | **49.7** | 10 | mg/kg | 50 | | 99.5 | 80-120 | 0.541 | 20 | |
| Zinc | **51.2** | 3.0 | mg/kg | 50 | | 102 | 80-120 | 0.0975 | 20 | |
| **Duplicate (B6E0220-DUP1)** | | **Source: 6D27022-13** | | Prepared: 05/02/16 Analyzed: 05/03/16 | | | | | | |
| Antimony | **<10** | 10 | mg/kg | | | | | | 40 | |
| Arsenic | **2.80** | 0.50 | mg/kg | | 2.50 | | | 11.1 | 40 | |
| Barium | **117** | 10 | mg/kg | | 137 | | | 15.9 | 40 | |
| Beryllium | **<1.0** | 1.0 | mg/kg | | | | | | 40 | |
| Cadmium | **<1.0** | 1.0 | mg/kg | | | | | | 40 | |
| Chromium | **28.1** | 3.0 | mg/kg | | 29.9 | | | 6.08 | 40 | |
| Cobalt | **8.59** | 3.0 | mg/kg | | 10.7 | | | 21.6 | 40 | |
| Copper | **24.7** | 3.0 | mg/kg | | 28.9 | | | 15.5 | 40 | |
| Lead | **32.2** | 3.0 | mg/kg | | 49.0 | | | 41.5 | 40 | |
| Molybdenum | **<5.0** | 5.0 | mg/kg | | | | | | 40 | |
| Nickel | **11.3** | 3.0 | mg/kg | | 12.8 | | | 12.7 | 40 | |
| Selenium | **<0.50** | 0.50 | mg/kg | | | | | | 40 | |
| Silver | **<1.0** | 1.0 | mg/kg | | | | | | 40 | |
| Thallium | **<5.0** | 5.0 | mg/kg | | | | | | 40 | |
| Vanadium | **43.3** | 10 | mg/kg | | 52.6 | | | 19.3 | 40 | |
| Zinc | **124** | 3.0 | mg/kg | | 167 | | | 29.2 | 40 | |
| **Matrix Spike (B6E0220-MS1)** | | **Source: 6D29007-01** | | Prepared: 05/02/16 Analyzed: 05/03/16 | | | | | | |
| Antimony | **15.0** | 10 | mg/kg | 50 | | 30.0 | 75-125 | | | QM-07 |
| Arsenic | **50.8** | 0.50 | mg/kg | 50 | 3.65 | 94.3 | 75-125 | | | |
| Barium | **183** | 10 | mg/kg | 50 | 144 | 78.8 | 75-125 | | | |
| Beryllium | **49.5** | 1.0 | mg/kg | 50 | | 99.0 | 75-125 | | | |
| Cadmium | **49.4** | 1.0 | mg/kg | 50 | | 98.8 | 75-125 | | | |
| Chromium | **62.9** | 3.0 | mg/kg | 50 | 16.4 | 93.1 | 75-125 | | | |
| Cobalt | **59.6** | 3.0 | mg/kg | 50 | 12.6 | 93.9 | 75-125 | | | |

**Viorel Vasile**
Operations Manager

# LABORATORY ANALYSIS RESULTS

**Client:** Stantec (TO)
**Project No:** 2057123300
**Project Name:** Grayson Power Plant Glendale Phase II

**AA Project No:** A732176
**Date Received:** 04/28/16
**Date Reported:** 05/12/16

| Analyte | Result | Reporting Limit | Units | Spike Level | Source Result | %REC | %REC Limits | RPD | RPD Limit | Notes |
|---|---|---|---|---|---|---|---|---|---|---|
| **Total Metals CAM 17 - Quality Control** | | | | | | | | | | |
| *Batch B6E0220 - EPA 3050B* | | | | | | | | | | |
| **Matrix Spike (B6E0220-MS1) Continued Source: 6D29007-01** Prepared: 05/02/16 Analyzed: 05/03/16 | | | | | | | | | | |
| Copper | **62.6** | 3.0 | mg/kg | 50 | 18.5 | 88.2 | 75-125 | | | |
| Lead | **55.7** | 3.0 | mg/kg | 50 | 7.10 | 97.2 | 75-125 | | | |
| Molybdenum | **47.8** | 5.0 | mg/kg | 50 | | 95.5 | 75-125 | | | |
| Nickel | **57.8** | 3.0 | mg/kg | 50 | 11.6 | 92.4 | 75-125 | | | |
| Selenium | **46.7** | 0.50 | mg/kg | 50 | | 93.5 | 75-125 | | | |
| Silver | **47.0** | 1.0 | mg/kg | 50 | | 94.1 | 75-125 | | | |
| Thallium | **37.9** | 5.0 | mg/kg | 50 | | 75.8 | 60-140 | | | |
| Vanadium | **99.5** | 10 | mg/kg | 50 | 58.4 | 82.3 | 75-125 | | | |
| Zinc | **130** | 3.0 | mg/kg | 50 | 90.6 | 79.2 | 75-125 | | | |
| **Matrix Spike Dup (B6E0220-MSD1) Source: 6D29007-01** Prepared: 05/02/16 Analyzed: 05/03/16 | | | | | | | | | | |
| Antimony | **14.9** | 10 | mg/kg | 50 | | 29.7 | 75-125 | 0.871 | 40 | QM-07 |
| Arsenic | **52.0** | 0.50 | mg/kg | 50 | 3.65 | 96.8 | 75-125 | 2.43 | 40 | |
| Barium | **184** | 10 | mg/kg | 50 | 144 | 80.3 | 75-125 | 0.409 | 40 | |
| Beryllium | **50.0** | 1.0 | mg/kg | 50 | | 100 | 75-125 | 1.16 | 40 | |
| Cadmium | **49.8** | 1.0 | mg/kg | 50 | | 99.5 | 75-125 | 0.696 | 40 | |
| Chromium | **63.9** | 3.0 | mg/kg | 50 | 16.4 | 95.1 | 75-125 | 1.58 | 40 | |
| Cobalt | **60.4** | 3.0 | mg/kg | 50 | 12.6 | 95.5 | 75-125 | 1.33 | 40 | |
| Copper | **63.8** | 3.0 | mg/kg | 50 | 18.5 | 90.8 | 75-125 | 2.06 | 40 | |
| Lead | **57.2** | 3.0 | mg/kg | 50 | 7.10 | 100 | 75-125 | 2.57 | 40 | |
| Molybdenum | **49.0** | 5.0 | mg/kg | 50 | | 98.0 | 75-125 | 2.51 | 40 | |
| Nickel | **57.6** | 3.0 | mg/kg | 50 | 11.6 | 92.1 | 75-125 | 0.260 | 40 | |
| Selenium | **48.0** | 0.50 | mg/kg | 50 | | 96.0 | 75-125 | 2.66 | 40 | |
| Silver | **47.6** | 1.0 | mg/kg | 50 | | 95.3 | 75-125 | 1.24 | 40 | |
| Thallium | **39.0** | 5.0 | mg/kg | 50 | | 78.0 | 60-140 | 2.87 | 40 | |
| Vanadium | **103** | 10 | mg/kg | 50 | 58.4 | 90.1 | 75-125 | 3.84 | 40 | |
| Zinc | **136** | 3.0 | mg/kg | 50 | 90.6 | 90.4 | 75-125 | 4.21 | 40 | |
| *Batch B6E0323 - EPA 3010A* | | | | | | | | | | |
| **Blank (B6E0323-BLK1)** Prepared: 05/03/16 Analyzed: 05/04/16 | | | | | | | | | | |
| Antimony | <0.20 | 0.20 | mg/L | | | | | | | |
| Arsenic | <0.0070 | 0.0070 | mg/L | | | | | | | |
| Barium | <0.20 | 0.20 | mg/L | | | | | | | |

**Viorel Vasile**
Operations Manager

# LABORATORY ANALYSIS RESULTS

**Client:** Stantec (TO)
**Project No:** 2057123300
**Project Name:** Grayson Power Plant Glendale Phase II

**AA Project No:** A732176
**Date Received:** 04/28/16
**Date Reported:** 05/12/16

| Analyte | Result | Reporting Limit | Units | Spike Level | Source Result | %REC | %REC Limits | RPD | RPD Limit | Notes |
|---|---|---|---|---|---|---|---|---|---|---|
| **Total Metals CAM 17 - Quality Control** | | | | | | | | | | |
| *Batch B6E0323 - EPA 3010A* | | | | | | | | | | |
| **Blank (B6E0323-BLK1) Continued** | | | | Prepared: 05/03/16 Analyzed: 05/04/16 | | | | | | |
| Beryllium | <0.020 | 0.020 | mg/L | | | | | | | |
| Cadmium | <0.020 | 0.020 | mg/L | | | | | | | |
| Chromium | <0.050 | 0.050 | mg/L | | | | | | | |
| Cobalt | <0.050 | 0.050 | mg/L | | | | | | | |
| Copper | <0.050 | 0.050 | mg/L | | | | | | | |
| Lead | <0.0050 | 0.0050 | mg/L | | | | | | | |
| Molybdenum | <0.050 | 0.050 | mg/L | | | | | | | |
| Nickel | <0.050 | 0.050 | mg/L | | | | | | | |
| Selenium | <0.0050 | 0.0050 | mg/L | | | | | | | |
| Silver | <0.020 | 0.020 | mg/L | | | | | | | |
| Thallium | <0.10 | 0.10 | mg/L | | | | | | | |
| Vanadium | <0.20 | 0.20 | mg/L | | | | | | | |
| Zinc | <0.050 | 0.050 | mg/L | | | | | | | |
| **LCS (B6E0323-BS1)** | | | | Prepared: 05/03/16 Analyzed: 05/04/16 | | | | | | |
| Antimony | **0.180** | 0.20 | mg/L | 0.20 | | 90.1 | 80-120 | | | |
| Arsenic | **0.190** | 0.0070 | mg/L | 0.20 | | 95.0 | 80-120 | | | |
| Barium | **0.179** | 0.20 | mg/L | 0.20 | | 89.4 | 80-120 | | | |
| Beryllium | **0.203** | 0.020 | mg/L | 0.20 | | 102 | 80-120 | | | |
| Cadmium | **0.203** | 0.020 | mg/L | 0.20 | | 101 | 80-120 | | | |
| Chromium | **0.194** | 0.050 | mg/L | 0.20 | | 97.2 | 80-120 | | | |
| Cobalt | **0.195** | 0.050 | mg/L | 0.20 | | 97.4 | 80-120 | | | |
| Copper | **0.175** | 0.050 | mg/L | 0.20 | | 87.6 | 80-120 | | | |
| Lead | **0.196** | 0.0050 | mg/L | 0.20 | | 97.9 | 80-120 | | | |
| Molybdenum | **0.190** | 0.050 | mg/L | 0.20 | | 95.0 | 80-120 | | | |
| Nickel | **0.195** | 0.050 | mg/L | 0.20 | | 97.7 | 80-120 | | | |
| Selenium | **0.190** | 0.0050 | mg/L | 0.20 | | 94.8 | 80-120 | | | |
| Silver | **0.174** | 0.020 | mg/L | 0.20 | | 87.2 | 80-120 | | | |
| Thallium | **0.196** | 0.10 | mg/L | 0.20 | | 97.8 | 80-120 | | | |
| Vanadium | **0.186** | 0.20 | mg/L | 0.20 | | 93.2 | 80-120 | | | |
| Zinc | **0.211** | 0.050 | mg/L | 0.20 | | 106 | 80-120 | | | |
| **LCS Dup (B6E0323-BSD1)** | | | | Prepared: 05/03/16 Analyzed: 05/04/16 | | | | | | |

**Viorel Vasile**
Operations Manager

# LABORATORY ANALYSIS RESULTS

**Client:** Stantec (TO)
**Project No:** 2057123300
**Project Name:** Grayson Power Plant Glendale Phase II

**AA Project No:** A732176
**Date Received:** 04/28/16
**Date Reported:** 05/12/16

| Analyte | Result | Reporting Limit | Units | Spike Level | Source Result | %REC | %REC Limits | RPD | RPD Limit | Notes |
|---|---|---|---|---|---|---|---|---|---|---|
| **Total Metals CAM 17 - Quality Control** | | | | | | | | | | |
| *Batch B6E0323 - EPA 3010A* | | | | | | | | | | |
| **LCS Dup (B6E0323-BSD1) Continued** | | | | Prepared: 05/03/16 Analyzed: 05/04/16 | | | | | | |
| Antimony | **0.182** | 0.20 | mg/L | 0.20 | | 91.0 | 80-120 | 1.05 | 20 | |
| Arsenic | **0.186** | 0.0070 | mg/L | 0.20 | | 93.0 | 80-120 | 2.02 | 20 | |
| Barium | **0.172** | 0.20 | mg/L | 0.20 | | 86.1 | 80-120 | 3.76 | 20 | |
| Beryllium | **0.206** | 0.020 | mg/L | 0.20 | | 103 | 80-120 | 1.27 | 20 | |
| Cadmium | **0.204** | 0.020 | mg/L | 0.20 | | 102 | 80-120 | 0.492 | 20 | |
| Chromium | **0.194** | 0.050 | mg/L | 0.20 | | 97.0 | 80-120 | 0.258 | 20 | |
| Cobalt | **0.194** | 0.050 | mg/L | 0.20 | | 96.8 | 80-120 | 0.618 | 20 | |
| Copper | **0.177** | 0.050 | mg/L | 0.20 | | 88.4 | 80-120 | 0.852 | 20 | |
| Lead | **0.194** | 0.0050 | mg/L | 0.20 | | 96.8 | 80-120 | 1.08 | 20 | |
| Molybdenum | **0.190** | 0.050 | mg/L | 0.20 | | 95.1 | 80-120 | 0.0526 | 20 | |
| Nickel | **0.195** | 0.050 | mg/L | 0.20 | | 97.6 | 80-120 | 0.0512 | 20 | |
| Selenium | **0.196** | 0.0050 | mg/L | 0.20 | | 98.0 | 80-120 | 3.27 | 20 | |
| Silver | **0.176** | 0.020 | mg/L | 0.20 | | 88.2 | 80-120 | 1.14 | 20 | |
| Thallium | **0.195** | 0.10 | mg/L | 0.20 | | 97.5 | 80-120 | 0.358 | 20 | |
| Vanadium | **0.187** | 0.20 | mg/L | 0.20 | | 93.4 | 80-120 | 0.214 | 20 | |
| Zinc | **0.212** | 0.050 | mg/L | 0.20 | | 106 | 80-120 | 0.189 | 20 | |
| **Duplicate (B6E0323-DUP1)** | | **Source: 6D28026-06** | | Prepared: 05/03/16 Analyzed: 05/04/16 | | | | | | |
| Antimony | **<0.20** | 0.20 | mg/L | | <0.20 | | | | 30 | |
| Arsenic | **<0.0070** | 0.0070 | mg/L | | <0.0070 | | | | 30 | |
| Barium | **0.471** | 0.20 | mg/L | | 0.466 | | | 1.05 | 30 | |
| Beryllium | **<0.020** | 0.020 | mg/L | | <0.020 | | | | 30 | |
| Cadmium | **<0.020** | 0.020 | mg/L | | <0.020 | | | | 30 | |
| Chromium | **1.06** | 0.050 | mg/L | | 1.09 | | | 2.80 | 30 | |
| Cobalt | **0.135** | 0.050 | mg/L | | 0.140 | | | 3.72 | 30 | |
| Copper | **0.113** | 0.050 | mg/L | | 0.117 | | | 2.87 | 30 | |
| Lead | **<0.0050** | 0.0050 | mg/L | | <0.0050 | | | | 30 | |
| Molybdenum | **0.325** | 0.050 | mg/L | | <0.050 | | | | 30 | |
| Nickel | **0.103** | 0.050 | mg/L | | 0.106 | | | 2.78 | 30 | |
| Selenium | **<0.0050** | 0.0050 | mg/L | | <0.0050 | | | | 30 | |
| Silver | **<0.020** | 0.020 | mg/L | | <0.020 | | | | 30 | |
| Thallium | **<0.10** | 0.10 | mg/L | | <0.10 | | | | 30 | |

**Viorel Vasile**
Operations Manager

# LABORATORY ANALYSIS RESULTS

**Client:** Stantec (TO)
**Project No:** 2057123300
**Project Name:** Grayson Power Plant Glendale Phase II

**AA Project No:** A732176
**Date Received:** 04/28/16
**Date Reported:** 05/12/16

| Analyte | Result | Reporting Limit | Units | Spike Level | Source Result | %REC | %REC Limits | RPD | RPD Limit | Notes |
|---|---|---|---|---|---|---|---|---|---|---|
| **Total Metals CAM 17 - Quality Control** | | | | | | | | | | |
| *Batch B6E0323 - EPA 3010A* | | | | | | | | | | |
| **Duplicate (B6E0323-DUP1) Continued** | | **Source: 6D28026-06** | Prepared: 05/03/16 | | Analyzed: 05/04/16 | | | | | |
| Vanadium | **0.218** | 0.20 | mg/L | | 0.224 | | | 2.81 | 30 | |
| Zinc | **0.122** | 0.050 | mg/L | | 0.125 | | | 2.34 | 30 | |
| **Matrix Spike (B6E0323-MS1)** | | **Source: 6D28026-16** | Prepared: 05/03/16 | | Analyzed: 05/04/16 | | | | | |
| Antimony | **0.187** | 0.20 | mg/L | 0.20 | <0.20 | 93.6 | 75-125 | | | |
| Arsenic | **0.195** | 0.0070 | mg/L | 0.20 | 0.00700 | 93.8 | 75-125 | | | |
| Barium | **1.12** | 0.20 | mg/L | 0.20 | 1.07 | 26.5 | 75-125 | | | QM-07 |
| Beryllium | **0.192** | 0.020 | mg/L | 0.20 | <0.020 | 96.2 | 75-125 | | | |
| Cadmium | **0.186** | 0.020 | mg/L | 0.20 | <0.020 | 93.1 | 75-125 | | | |
| Chromium | **0.731** | 0.050 | mg/L | 0.20 | 0.619 | 55.9 | 75-125 | | | QM-07 |
| Cobalt | **0.298** | 0.050 | mg/L | 0.20 | 0.134 | 81.8 | 75-125 | | | |
| Copper | **0.274** | 0.050 | mg/L | 0.20 | 0.109 | 82.8 | 75-125 | | | |
| Lead | **0.188** | 0.0050 | mg/L | 0.20 | <0.0050 | 94.2 | 75-125 | | | |
| Molybdenum | **0.311** | 0.050 | mg/L | 0.20 | <0.050 | 156 | 75-125 | | | QM-07 |
| Nickel | **0.244** | 0.050 | mg/L | 0.20 | 0.0810 | 81.6 | 75-125 | | | |
| Selenium | **0.203** | 0.0050 | mg/L | 0.20 | <0.0050 | 102 | 75-125 | | | |
| Silver | **0.177** | 0.020 | mg/L | 0.20 | <0.020 | 88.6 | 75-125 | | | |
| Thallium | **0.209** | 0.10 | mg/L | 0.20 | <0.10 | 105 | 75-125 | | | |
| Vanadium | **0.349** | 0.20 | mg/L | 0.20 | <0.20 | 174 | 75-125 | | | QM-07 |
| Zinc | **0.329** | 0.050 | mg/L | 0.20 | 0.168 | 80.6 | 75-125 | | | |
| **Matrix Spike Dup (B6E0323-MSD1)** | | **Source: 6D28026-16** | Prepared: 05/03/16 | | Analyzed: 05/04/16 | | | | | |
| Antimony | **0.181** | 0.20 | mg/L | 0.20 | <0.20 | 90.6 | 75-125 | 3.31 | 20 | |
| Arsenic | **0.195** | 0.0070 | mg/L | 0.20 | 0.00700 | 94.0 | 75-125 | 0.205 | 20 | |
| Barium | **1.18** | 0.20 | mg/L | 0.20 | 1.07 | 52.0 | 75-125 | 4.43 | 20 | QM-07 |
| Beryllium | **0.189** | 0.020 | mg/L | 0.20 | <0.020 | 94.4 | 75-125 | 1.89 | 20 | |
| Cadmium | **0.183** | 0.020 | mg/L | 0.20 | <0.020 | 91.4 | 75-125 | 1.90 | 20 | |
| Chromium | **0.753** | 0.050 | mg/L | 0.20 | 0.619 | 67.2 | 75-125 | 3.05 | 20 | QM-07 |
| Cobalt | **0.300** | 0.050 | mg/L | 0.20 | 0.134 | 82.6 | 75-125 | 0.603 | 20 | |
| Copper | **0.276** | 0.050 | mg/L | 0.20 | 0.109 | 83.6 | 75-125 | 0.581 | 20 | |
| Lead | **0.186** | 0.0050 | mg/L | 0.20 | <0.0050 | 92.8 | 75-125 | 1.44 | 20 | |
| Molybdenum | **0.316** | 0.050 | mg/L | 0.20 | <0.050 | 158 | 75-125 | 1.40 | 20 | QM-07 |
| Nickel | **0.249** | 0.050 | mg/L | 0.20 | 0.0810 | 84.2 | 75-125 | 2.11 | 20 | |

**Viorel Vasile**
Operations Manager

# LABORATORY ANALYSIS RESULTS

**Client:** Stantec (TO)
**Project No:** 2057123300
**Project Name:** Grayson Power Plant Glendale Phase II

**AA Project No:** A732176
**Date Received:** 04/28/16
**Date Reported:** 05/12/16

| Analyte | Result | Reporting Limit | Units | Spike Level | Source Result | %REC | %REC Limits | RPD | RPD Limit | Notes |
|---|---|---|---|---|---|---|---|---|---|---|
| **Total Metals CAM 17 - Quality Control** | | | | | | | | | | |
| *Batch B6E0323 - EPA 3010A* | | | | | | | | | | |
| **Matrix Spike Dup (B6E0323-MSD1) Continued** | | | **Source: 6D28026-16** | Prepared: 05/03/16 Analyzed: 05/04/16 | | | | | | |
| Selenium | **0.198** | 0.0050 | mg/L | 0.20 | <0.0050 | 99.2 | 75-125 | 2.34 | 20 | |
| Silver | **0.180** | 0.020 | mg/L | 0.20 | <0.020 | 90.1 | 75-125 | 1.68 | 20 | |
| Thallium | **0.228** | 0.10 | mg/L | 0.20 | <0.10 | 114 | 75-125 | 8.69 | 20 | |
| Vanadium | **0.352** | 0.20 | mg/L | 0.20 | <0.20 | 176 | 75-125 | 0.800 | 20 | QM-07 |
| Zinc | **0.324** | 0.050 | mg/L | 0.20 | 0.168 | 77.8 | 75-125 | 1.65 | 20 | |
| **Total Metals CAM 17 - Quality Control** | | | | | | | | | | |
| *Batch B6E0221 - EPA 7471A Prep* | | | | | | | | | | |
| **Blank (B6E0221-BLK1)** | | | | Prepared & Analyzed: 05/02/16 | | | | | | |
| Mercury | <0.020 | 0.020 | mg/kg | | | | | | | |
| **LCS (B6E0221-BS1)** | | | | Prepared & Analyzed: 05/02/16 | | | | | | |
| Mercury | **0.541** | 0.020 | mg/kg | 0.50 | | 108 | 80-120 | | | |
| **LCS Dup (B6E0221-BSD1)** | | | | Prepared & Analyzed: 05/02/16 | | | | | | |
| Mercury | **0.540** | 0.020 | mg/kg | 0.50 | | 108 | 80-120 | 0.278 | 25 | |
| **Matrix Spike (B6E0221-MS1)** | | | **Source: 6D29007-01** | Prepared & Analyzed: 05/02/16 | | | | | | |
| Mercury | **0.609** | 0.020 | mg/kg | 0.50 | 0.0865 | 104 | 75-125 | | | |
| **Matrix Spike Dup (B6E0221-MSD1)** | | | **Source: 6D29007-01** | Prepared & Analyzed: 05/02/16 | | | | | | |
| Mercury | **0.633** | 0.020 | mg/kg | 0.50 | 0.0865 | 109 | 75-125 | 3.86 | 25 | |
| *Batch B6E0328 - EPA 7470A Prep* | | | | | | | | | | |
| **Blank (B6E0328-BLK1)** | | | | Prepared & Analyzed: 05/03/16 | | | | | | |
| Mercury | <0.00050 | 0.00050 | mg/L | | | | | | | |
| **LCS (B6E0328-BS1)** | | | | Prepared & Analyzed: 05/03/16 | | | | | | |
| Mercury | **0.0104** | 0.00050 | mg/L | 0.010 | | 104 | 80-120 | | | |
| **LCS Dup (B6E0328-BSD1)** | | | | Prepared & Analyzed: 05/03/16 | | | | | | |
| Mercury | **0.0105** | 0.00050 | mg/L | 0.010 | | 105 | 80-120 | 1.00 | 20 | |
| **Duplicate (B6E0328-DUP1)** | | | **Source: 6D27022-04** | Prepared & Analyzed: 05/03/16 | | | | | | |
| Mercury | **<0.00050** | 0.00050 | mg/L | | | | | | 25 | |
| **Matrix Spike (B6E0328-MS1)** | | | **Source: 6D28026-16** | Prepared & Analyzed: 05/03/16 | | | | | | |
| Mercury | **0.0104** | 0.00050 | mg/L | 0.010 | 0.00050 | 104 | 75-125 | | | |

**Viorel Vasile**
Operations Manager

# LABORATORY ANALYSIS RESULTS

**Client:** Stantec (TO)
**Project No:** 2057123300
**Project Name:** Grayson Power Plant Glendale Phase II

**AA Project No:** A732176
**Date Received:** 04/28/16
**Date Reported:** 05/12/16

| Analyte | Result | Reporting Limit | Units | Spike Level | Source Result | %REC | %REC Limits | RPD | RPD Limit | Notes |
|---|---|---|---|---|---|---|---|---|---|---|
| **Total Metals CAM 17 - Quality Control** | | | | | | | | | | |
| *Batch B6E0328 - EPA 7470A Prep* | | | | | | | | | | |
| **Matrix Spike Dup (B6E0328-MSD1)** | | | **Source: 6D28026-16** | Prepared & Analyzed: 05/03/16 | | | | | | |
| Mercury | **0.0105** | 0.00050 | mg/L | 0.010 | 0.00050 | 105 | 75-125 | 1.15 | 20 | |

**Viorel Vasile**
Operations Manager

# LABORATORY ANALYSIS RESULTS

| | | | |
|---|---|---|---|
| **Client:** | Stantec (TO) | **AA Project No:** | A732176 |
| **Project No:** | 2057123300 | **Date Received:** | 04/28/16 |
| **Project Name:** | Grayson Power Plant Glendale Phase II | **Date Reported:** | 05/12/16 |

**Special Notes**

**[1] = AA-C1** : The reported concentration is mainly from the contribution of chlorinated compounds present in the sample

**[2] = D-35** : Sample does not display a fuel pattern. Sample contains several discrete peaks.

**[3] = QM-01** : The spike recovery for this QC sample is outside of established control limits due to sample matrix interference.

**[4] = QM-07** : The spike recovery was outside acceptance limits for the MS and/or MSD. The batch was accepted based on acceptable LCS recovery.

Gasoline Range Organics (GRO) concentration represents the C4-C12 carbon range.

**Viorel Vasile**
Operations Manager

Stantec

# CHAIN OF CUSTODY FORM

25864 F Business Center Dr., Redlands, CA 92374 (909) 335 6116 Fax [redacted] 335 6120

A732176/6028626

COCH 125014 Page 1 of 2

Client Name/Address:
Stantec
25864 F Business Center Drive
Redlands, CA 92374

Project/PO Number: 2057123300.M800-5G

Laboratory: American Analytics

Project Manager: Carl Hasse
Email Address: Carl.Hasse@Stantec.com

Phone Number: 909 335 6116

Fax Number: 909-335-6120

Sampler: J. Sargent Joshua.Sargent@Stantec.com

Analysis Required

| Sample Description | Sample Matrix | Container Type | # of Cont. | Sampling Date | Sampling Time | Preservatives | TPH 8015 | Voc + oxygenates 8260 | CAM 17 Metals | Boro CF (W) 7199 | HOLD | 1422626 | Special Instructions |
|---|---|---|---|---|---|---|---|---|---|---|---|---|---|
| Trip Blank | W | VOA | 2 | — | — | HCL | | X | | | | -01 | — |
| SB-3-1 | S | Varies | 1 | 4.28.16 | 0643 | Varies | | | X | | | -02 | PID: 0.0 |
| SB-3-15 | S | | 4 | | 0657 | | | | | | X | -03 | PID: 1.2 |
| SB-3-35 | S | | 4 | | 0709 | | X | X | | X | | -04 | PID: 2.2 |
| SB-3-40 | S | | 4 | | 0712 | | X | X | | | | -05 | PID: 1.7 |
| SB-3-GW | W | | 6 | | 0743 | | X | X | X | X | | -06 | — |
| SB-5-1 | S | | 1 | | 0826 | | | | X | | | -07 | PID: 0.1 |
| SB-5-10 | S | | 4 | | 0840 | | | | | | X | -08 | PID: 1.1 |
| SB-5-20 | S | | 4 | | 0848 | | X | X | | X | | -09 | PID: 6.1 |
| SB-5-30 | S | | 4 | | 0857 | | X | X | | | | -10 | PID: 5.5 |
| SB-5-GW | W | | 6 | | 1110 | | X | X | X | X | | -11 | — |

PRIORITY
Rush Date 4/28/16 Time 16:15 Sign
Hrs SH

| | | | |
|---|---|---|---|
| Relinquished By: | Date/Time: 4.28.16 1431 | Received By: | Date/Time: 4-28-16 14:31 |
| Relinquished By: | Date/Time: | Received By: | Date/Time: 4/28/16 1525 |
| Relinquished By: | Date/Time: | Received in Lab By: | Date/Time: |

Turn Around Time: Same day / 24 hour / 48 hour / 72 hours / 5 days / Normal

Sample Integrity: (Check) Intact ✓ on ice ✓

**Note:** By relinquishing samples, client agrees to pay for the services requested on this chain of custody form and any additional analyses performed on this project. Payment for services is due within 30 days from the date of invoice. Sample(s) will be disposed of after 30 days.

Stantec

# CHAIN OF CUSTODY FORM

25864-F Business Center Dr., Redlands, CA 92374 (909) 335-6116, Fax (909) 335-6120

A732176/6D28026 ccH12505



Client Name/Address:
Stantec
25864-F Business Center Drive
Redlands, CA 92374

Project Manager: Carl Hasse
Email Address: Carl.Hasse@stantec.com

Sampler: J Sargent Joshua.Sargent@Stantec.com

Project/PO Number: 2057123300

Phone Number: 909-335-6116

Fax Number: 909-335-6120

Laboratory: American Analytics

Analysis Required

| Sample Description | Sample Matrix | Container Type | # of Cont. | Sampling Date | Sampling Time | Preservatives | TPH Bars | VOC 8260 | CAM 17 Metals 6010 | Cr(VI) 7199 | HOLD | | | CA28026 | Special Instructions |
|---|---|---|---|---|---|---|---|---|---|---|---|---|---|---|---|
| SB-9-1 | S | Varies | 1 | 4.28.16 | 1131 | Varies | | | X | | | | | -12 | PID: 0.6 |
| SB-9-5 | S | | 4 | | 1145 | | X | X | | | | | | -13 | PID: 1.3 |
| SB-9-10 | S | | 4 | | 1150 | | X | X | | X | | | | -14 | PID: 1.8 |
| SB-9-25 | S | | 4 | | 1210 | | | | | | X | | | -15 | PID: 0.3 |
| SB-9-GW | W | | 6 | | 1244 | | X | X | X | X | | | | -16 | — |
| SB-11-1 | S | | 1 | | 1325 | | | | X | | | | | -17 | PID: 0.1 |
| SB-11-5 | S | | 4 | | 1333 | | X | X | | X | | | | -18 | PID: 0.2 |
| SB-11-15 | S | | 4 | | 1340 | | | | | | X | | | -19 | PID: 0.1 |
| SB-11-35 | S | | 4 | | 1400 | | X | X | | | | | | -20 | PID: 0.2 |
| ~~SB-11-GW~~ | ~~W~~ | | | | | | | | | | | | | | |

PRIORITY
Rush Hrs
Date 4/28/16 Time 1615 Sign SM

| Relinquished By: | Date/Time: | Received By: | Date/Time: |
|---|---|---|---|
| [signature] | 4.28.16 1431 | [signature] | 4-28-16 14:31 |
| [signature] | | [signature] | 4/28/16 1525 |
| Relinquished By: | Date/Time: | Received in Lab By: | Date/Time: |

Turn Around Time: Same day / 24 hour / 48 hour / 72 hours / 5 days / Normal

Sample Integrity: (Check)
Intact X on ice X

**Note:** By relinquishing samples, client agrees to pay for the services requested on this chain of custody form and any additional analyses performed on this project. Payment for services is due within 30 days from the date of invoice. Sample(s) will be disposed of after 30 days.

9765 Eton Avenue
Chatsworth
California 91311
Tel: (818) 998-5547
Fax: (818) 998-7258

May 24, 2016

Anuya Sawant

Stantec (TO)

290 Conejo Ridge Ave. Suite #200

Thousand Oaks, CA 91361

**Re : Grayson Power Plant Glendale Phase II / 2057123300**

**A732177 / 6D29007**

Enclosed is an analytical report for the above-referenced project. The samples included in this report were received on 04/29/16 12:33 and analyzed in accordance with the attached chain-of-custody.

Unless otherwise noted, all analytical testing was accomplished in accordance with the guidelines established in our Quality Assurance Program Manual, applicable standard operating procedures, and other related documentation. The results in this analytical report are limited to the samples tested and any reproduction thereof must be made in its entirety.

If you have any questions regarding this report or require additional information please call me at American Analytics.

Sincerely,

Viorel Vasile

Operations Manager

# LABORATORY ANALYSIS RESULTS

**Client:** Stantec (TO)
**Project No:** 2057123300
**Project Name:** Grayson Power Plant Glendale Phase II

**AA Project No:** A732177
**Date Received:** 04/29/16
**Date Reported:** 05/24/16

| Sample ID | Laboratory ID | Matrix | TAT | Date Sampled | Date Received |
|---|---|---|---|---|---|
| **7199 Hexavalent Chromium by IC - Low Level** | | | | | |
| SB-10-10 | 6D29007-02 | Soil | 7 | 04/29/16 06:47 | 04/29/16 12:33 |
| SB-13-5 | 6D29007-06 | Soil | 7 | 04/29/16 07:29 | 04/29/16 12:33 |
| SB-2-10 | 6D29007-10 | Soil | 7 | 04/29/16 08:20 | 04/29/16 12:33 |
| SB-1-5 | 6D29007-13 | Soil | 7 | 04/29/16 09:44 | 04/29/16 12:33 |
| SB-4-10 | 6D29007-18 | Soil | 7 | 04/29/16 08:58 | 04/29/16 12:33 |
| **8260B/5035 +OXY+TPHG** | | | | | |
| SB-10-10 | 6D29007-02 | Soil | 7 | 04/29/16 06:47 | 04/29/16 12:33 |
| SB-10-15 | 6D29007-03 | Soil | 7 | 04/29/16 06:50 | 04/29/16 12:33 |
| SB-13-5 | 6D29007-06 | Soil | 7 | 04/29/16 07:29 | 04/29/16 12:33 |
| SB-13-15 | 6D29007-07 | Soil | 7 | 04/29/16 07:35 | 04/29/16 12:33 |
| SB-2-10 | 6D29007-10 | Soil | 7 | 04/29/16 08:20 | 04/29/16 12:33 |
| SB-2-20 | 6D29007-11 | Soil | 7 | 04/29/16 08:25 | 04/29/16 12:33 |
| SB-1-5 | 6D29007-13 | Soil | 7 | 04/29/16 09:44 | 04/29/16 12:33 |
| SB-1-10 | 6D29007-14 | Soil | 7 | 04/29/16 09:48 | 04/29/16 12:33 |
| SB-4-10 | 6D29007-18 | Soil | 7 | 04/29/16 08:58 | 04/29/16 12:33 |
| SB-4-20 | 6D29007-19 | Soil | 7 | 04/29/16 09:04 | 04/29/16 12:33 |
| **CAM Metals Less Hg 6000/7000** | | | | | |
| SB-10-1 | 6D29007-01 | Soil | 7 | 04/29/16 06:30 | 04/29/16 12:33 |

**Viorel Vasile**
Operations Manager

# LABORATORY ANALYSIS RESULTS

**Client:** Stantec (TO)
**Project No:** 2057123300
**Project Name:** Grayson Power Plant Glendale Phase II

**AA Project No:** A732177
**Date Received:** 04/29/16
**Date Reported:** 05/24/16

| Sample ID | Laboratory ID | Matrix | TAT | Date Sampled | Date Received |
|---|---|---|---|---|---|
| SB-13-1 | 6D29007-05 | Soil | 7 | 04/29/16 07:00 | 04/29/16 12:33 |
| SB-2-1 | 6D29007-09 | Soil | 7 | 04/29/16 07:55 | 04/29/16 12:33 |
| SB-1-1 | 6D29007-12 | Soil | 7 | 04/29/16 09:15 | 04/29/16 12:33 |
| SB-4-1 | 6D29007-17 | Soil | 7 | 04/29/16 08:20 | 04/29/16 12:33 |
| **Carbon Chain Characterization 8015M** | | | | | |
| SB-10-10 | 6D29007-02 | Soil | 7 | 04/29/16 06:47 | 04/29/16 12:33 |
| SB-10-15 | 6D29007-03 | Soil | 7 | 04/29/16 06:50 | 04/29/16 12:33 |
| SB-13-5 | 6D29007-06 | Soil | 7 | 04/29/16 07:29 | 04/29/16 12:33 |
| SB-13-15 | 6D29007-07 | Soil | 7 | 04/29/16 07:35 | 04/29/16 12:33 |
| SB-2-10 | 6D29007-10 | Soil | 7 | 04/29/16 08:20 | 04/29/16 12:33 |
| SB-2-20 | 6D29007-11 | Soil | 7 | 04/29/16 08:25 | 04/29/16 12:33 |
| SB-1-5 | 6D29007-13 | Soil | 7 | 04/29/16 09:44 | 04/29/16 12:33 |
| SB-1-10 | 6D29007-14 | Soil | 7 | 04/29/16 09:48 | 04/29/16 12:33 |
| SB-4-10 | 6D29007-18 | Soil | 7 | 04/29/16 08:58 | 04/29/16 12:33 |
| SB-4-20 | 6D29007-19 | Soil | 7 | 04/29/16 09:04 | 04/29/16 12:33 |
| **Mercury Total EPA 7470A/7471A** | | | | | |
| SB-10-1 | 6D29007-01 | Soil | 7 | 04/29/16 06:30 | 04/29/16 12:33 |
| SB-13-1 | 6D29007-05 | Soil | 7 | 04/29/16 07:00 | 04/29/16 12:33 |
| SB-2-1 | 6D29007-09 | Soil | 7 | 04/29/16 07:55 | 04/29/16 12:33 |

**Viorel Vasile**
Operations Manager

# LABORATORY ANALYSIS RESULTS

**Client:** Stantec (TO)
**Project No:** 2057123300
**Project Name:** Grayson Power Plant Glendale Phase II

**AA Project No:** A732177
**Date Received:** 04/29/16
**Date Reported:** 05/24/16

| Sample ID | Laboratory ID | Matrix | TAT | Date Sampled | Date Received |
|---|---|---|---|---|---|
| SB-1-1 | 6D29007-12 | Soil | 7 | 04/29/16 09:15 | 04/29/16 12:33 |
| SB-4-1 | 6D29007-17 | Soil | 7 | 04/29/16 08:20 | 04/29/16 12:33 |
| **Metals STLC** | | | | | |
| Drum Profile | 6D29007-16 | Soil | 7 | 04/29/16 11:42 | 04/29/16 12:33 |
| **Metals TCLP** | | | | | |
| Drum Profile | 6D29007-16 | Soil | 7 | 04/29/16 11:42 | 04/29/16 12:33 |

**Viorel Vasile**
Operations Manager

# LABORATORY ANALYSIS RESULTS

**Client:** Stantec (TO)
**Project No:** 2057123300
**Project Name:** Grayson Power Plant Glendale Phase II
**Method:** Cations by Ion Chromatography

**AA Project No:** A732177
**Date Received:** 04/29/16
**Date Reported:** 05/24/16

| AA I.D. No. | Client I.D. No. | Sampled | Prepared | Analyzed | Dilution | Result | Units | MRL |
|---|---|---|---|---|---|---|---|---|
| **7199 Hexavalent Chromium by IC - Low Level (EPA 7199)** | | | | | | | | |
| 6D29007-02 | SB-10-10 | 04/29/16 | 05/05/16 | 05/05/16 | 1 | <0.040 | mg/kg | 0.04 |
| 6D29007-06 | SB-13-5 | 04/29/16 | 05/05/16 | 05/05/16 | 1 | <0.040 | mg/kg | 0.04 |
| 6D29007-10 | SB-2-10 | 04/29/16 | 05/05/16 | 05/05/16 | 1 | <0.040 | mg/kg | 0.04 |
| 6D29007-13 | SB-1-5 | 04/29/16 | 05/05/16 | 05/05/16 | 1 | <0.040 | mg/kg | 0.04 |
| 6D29007-18 | SB-4-10 | 04/29/16 | 05/05/16 | 05/05/16 | 1 | <0.040 | mg/kg | 0.04 |

**Viorel Vasile**
Operations Manager

# LABORATORY ANALYSIS RESULTS

**Client:** Stantec (TO)
**Project No:** 2057123300
**Project Name:** Grayson Power Plant Glendale Phase II
**Method:** VOCs, OXY & TPHG by GC/MS EPA 5035

**AA Project No:** A732177
**Date Received:** 04/29/16
**Date Reported:** 05/24/16
**Units:** mg/kg

| | | | | | |
|---|---|---|---|---|---|
| **Date Sampled:** | 04/29/16 | 04/29/16 | 04/29/16 | 04/29/16 | |
| **Date Prepared:** | 05/11/16 | 05/11/16 | 05/11/16 | 05/11/16 | |
| **Date Analyzed:** | 05/11/16 | 05/11/16 | 05/11/16 | 05/11/16 | |
| **AA ID No:** | 6D29007-02 | 6D29007-03 | 6D29007-06 | 6D29007-07 | |
| **Client ID No:** | SB-10-10 | SB-10-15 | SB-13-5 | SB-13-15 | |
| **Matrix:** | Soil | Soil | Soil | Soil | |
| **Dilution Factor:** | 1 | 1 | 1 | 1 | MRL |
| **8260B/5035 +OXY+TPHG (EPA 8260B/5035)** | | | | | |
| Acetone | <0.050 | **0.29** | <0.050 | <0.050 | 0.050 |
| tert-Amyl Methyl Ether (TAME) | <0.0050 | <0.0050 | <0.0050 | <0.0050 | 0.0050 |
| Benzene | <0.0020 | <0.0020 | <0.0020 | <0.0020 | 0.0020 |
| Bromobenzene | <0.0050 | <0.0050 | <0.0050 | <0.0050 | 0.0050 |
| Bromochloromethane | <0.0050 | <0.0050 | <0.0050 | <0.0050 | 0.0050 |
| Bromodichloromethane | <0.0050 | <0.0050 | <0.0050 | <0.0050 | 0.0050 |
| Bromoform | <0.0050 | <0.0050 | <0.0050 | <0.0050 | 0.0050 |
| Bromomethane | <0.0050 | <0.0050 | <0.0050 | <0.0050 | 0.0050 |
| 2-Butanone (MEK) | <0.050 | <0.050 | <0.050 | <0.050 | 0.050 |
| tert-Butyl alcohol (TBA) | <0.020 | <0.020 | <0.020 | <0.020 | 0.020 |
| sec-Butylbenzene | <0.0050 | <0.0050 | <0.0050 | <0.0050 | 0.0050 |
| tert-Butylbenzene | <0.0050 | <0.0050 | <0.0050 | <0.0050 | 0.0050 |
| n-Butylbenzene | <0.0050 | <0.0050 | <0.0050 | <0.0050 | 0.0050 |
| Carbon Disulfide | <0.0050 | <0.0050 | <0.0050 | <0.0050 | 0.0050 |
| Carbon Tetrachloride | <0.0050 | <0.0050 | <0.0050 | <0.0050 | 0.0050 |
| Chlorobenzene | <0.0050 | <0.0050 | <0.0050 | <0.0050 | 0.0050 |
| Chloroethane | <0.0050 | <0.0050 | <0.0050 | <0.0050 | 0.0050 |
| Chloroform | <0.0050 | <0.0050 | <0.0050 | <0.0050 | 0.0050 |
| Chloromethane | <0.0050 | <0.0050 | <0.0050 | <0.0050 | 0.0050 |
| 2-Chlorotoluene | <0.0050 | <0.0050 | <0.0050 | <0.0050 | 0.0050 |
| 4-Chlorotoluene | <0.0050 | <0.0050 | <0.0050 | <0.0050 | 0.0050 |
| 1,2-Dibromo-3-chloropropane | <0.010 | <0.010 | <0.010 | <0.010 | 0.010 |
| Dibromochloromethane | <0.0050 | <0.0050 | <0.0050 | <0.0050 | 0.0050 |
| 1,2-Dibromoethane (EDB) | <0.0050 | <0.0050 | <0.0050 | <0.0050 | 0.0050 |
| Dibromomethane | <0.0050 | <0.0050 | <0.0050 | <0.0050 | 0.0050 |
| 1,4-Dichlorobenzene | <0.0050 | <0.0050 | <0.0050 | <0.0050 | 0.0050 |
| 1,3-Dichlorobenzene | <0.0050 | <0.0050 | <0.0050 | <0.0050 | 0.0050 |

**Viorel Vasile**
Operations Manager

# LABORATORY ANALYSIS RESULTS

**Client:** Stantec (TO)
**Project No:** 2057123300
**Project Name:** Grayson Power Plant Glendale Phase II
**Method:** VOCs, OXY & TPHG by GC/MS EPA 5035

**AA Project No:** A732177
**Date Received:** 04/29/16
**Date Reported:** 05/24/16
**Units:** mg/kg

| | | | | | |
|---|---|---|---|---|---|
| **Date Sampled:** | 04/29/16 | 04/29/16 | 04/29/16 | 04/29/16 | |
| **Date Prepared:** | 05/11/16 | 05/11/16 | 05/11/16 | 05/11/16 | |
| **Date Analyzed:** | 05/11/16 | 05/11/16 | 05/11/16 | 05/11/16 | |
| **AA ID No:** | 6D29007-02 | 6D29007-03 | 6D29007-06 | 6D29007-07 | |
| **Client ID No:** | SB-10-10 | SB-10-15 | SB-13-5 | SB-13-15 | |
| **Matrix:** | Soil | Soil | Soil | Soil | |
| **Dilution Factor:** | 1 | 1 | 1 | 1 | MRL |
| **8260B/5035 +OXY+TPHG (EPA 8260B/5035) (continued)** | | | | | |
| 1,2-Dichlorobenzene | <0.0050 | <0.0050 | <0.0050 | <0.0050 | 0.0050 |
| Dichlorodifluoromethane (R12) | <0.0050 | <0.0050 | <0.0050 | <0.0050 | 0.0050 |
| 1,1-Dichloroethane | <0.0050 | <0.0050 | <0.0050 | <0.0050 | 0.0050 |
| 1,2-Dichloroethane (EDC) | <0.0050 | <0.0050 | <0.0050 | <0.0050 | 0.0050 |
| trans-1,2-Dichloroethylene | <0.0050 | <0.0050 | <0.0050 | <0.0050 | 0.0050 |
| cis-1,2-Dichloroethylene | <0.0050 | <0.0050 | <0.0050 | <0.0050 | 0.0050 |
| 1,1-Dichloroethylene | <0.0050 | <0.0050 | <0.0050 | <0.0050 | 0.0050 |
| 2,2-Dichloropropane | <0.0050 | <0.0050 | <0.0050 | <0.0050 | 0.0050 |
| 1,3-Dichloropropane | <0.0050 | <0.0050 | <0.0050 | <0.0050 | 0.0050 |
| 1,2-Dichloropropane | <0.0050 | <0.0050 | <0.0050 | <0.0050 | 0.0050 |
| trans-1,3-Dichloropropylene | <0.0050 | <0.0050 | <0.0050 | <0.0050 | 0.0050 |
| 1,1-Dichloropropylene | <0.0050 | <0.0050 | <0.0050 | <0.0050 | 0.0050 |
| cis-1,3-Dichloropropylene | <0.0050 | <0.0050 | <0.0050 | <0.0050 | 0.0050 |
| Diisopropyl ether (DIPE) | <0.0050 | <0.0050 | <0.0050 | <0.0050 | 0.0050 |
| Ethylbenzene | <0.0020 | <0.0020 | <0.0020 | <0.0020 | 0.0020 |
| Ethyl-tert-Butyl Ether (ETBE) | <0.0050 | <0.0050 | <0.0050 | <0.0050 | 0.0050 |
| Gasoline Range Organics (GRO) | <0.50 | <0.50 | <0.50 | <0.50 | 0.50 |
| Hexachlorobutadiene | <0.010 | <0.010 | <0.010 | <0.010 | 0.010 |
| 2-Hexanone (MBK) | <0.050 | <0.050 | <0.050 | <0.050 | 0.050 |
| Isopropylbenzene | <0.0050 | <0.0050 | <0.0050 | <0.0050 | 0.0050 |
| 4-Isopropyltoluene | <0.0050 | <0.0050 | <0.0050 | <0.0050 | 0.0050 |
| Methyl-tert-Butyl Ether (MTBE) | <0.0050 | <0.0050 | <0.0050 | <0.0050 | 0.0050 |
| Methylene Chloride | <0.050 | <0.050 | <0.050 | <0.050 | 0.050 |
| 4-Methyl-2-pentanone (MIBK) | <0.050 | <0.050 | <0.050 | <0.050 | 0.050 |
| Naphthalene | <0.010 | <0.010 | <0.010 | <0.010 | 0.010 |
| n-Propylbenzene | <0.0050 | <0.0050 | <0.0050 | <0.0050 | 0.0050 |

**Viorel Vasile**
Operations Manager

# LABORATORY ANALYSIS RESULTS

**Client:** Stantec (TO)
**Project No:** 2057123300
**Project Name:** Grayson Power Plant Glendale Phase II
**Method:** VOCs, OXY & TPHG by GC/MS EPA 5035

**AA Project No:** A732177
**Date Received:** 04/29/16
**Date Reported:** 05/24/16
**Units:** mg/kg

| | | | | | |
|---|---|---|---|---|---|
| **Date Sampled:** | 04/29/16 | 04/29/16 | 04/29/16 | 04/29/16 | |
| **Date Prepared:** | 05/11/16 | 05/11/16 | 05/11/16 | 05/11/16 | |
| **Date Analyzed:** | 05/11/16 | 05/11/16 | 05/11/16 | 05/11/16 | |
| **AA ID No:** | 6D29007-02 | 6D29007-03 | 6D29007-06 | 6D29007-07 | |
| **Client ID No:** | SB-10-10 | SB-10-15 | SB-13-5 | SB-13-15 | |
| **Matrix:** | Soil | Soil | Soil | Soil | |
| **Dilution Factor:** | 1 | 1 | 1 | 1 | MRL |
| **8260B/5035 +OXY+TPHG (EPA 8260B/5035) (continued)** | | | | | |
| Styrene | <0.0050 | <0.0050 | <0.0050 | <0.0050 | 0.0050 |
| 1,1,1,2-Tetrachloroethane | <0.0050 | <0.0050 | <0.0050 | <0.0050 | 0.0050 |
| 1,1,2,2-Tetrachloroethane | <0.0050 | <0.0050 | <0.0050 | <0.0050 | 0.0050 |
| Tetrachloroethylene (PCE) | <0.0050 | <0.0050 | <0.0050 | <0.0050 | 0.0050 |
| Toluene | <0.0020 | <0.0020 | <0.0020 | <0.0020 | 0.0020 |
| 1,2,4-Trichlorobenzene | <0.0050 | <0.0050 | <0.0050 | <0.0050 | 0.0050 |
| 1,2,3-Trichlorobenzene | <0.0050 | <0.0050 | <0.0050 | <0.0050 | 0.0050 |
| 1,1,2-Trichloroethane | <0.0050 | <0.0050 | <0.0050 | <0.0050 | 0.0050 |
| 1,1,1-Trichloroethane | <0.0050 | <0.0050 | <0.0050 | <0.0050 | 0.0050 |
| Trichloroethylene (TCE) | <0.0050 | **0.0052** | <0.0050 | <0.0050 | 0.0050 |
| Trichlorofluoromethane (R11) | <0.0050 | <0.0050 | <0.0050 | <0.0050 | 0.0050 |
| 1,2,3-Trichloropropane | <0.0050 | <0.0050 | <0.0050 | <0.0050 | 0.0050 |
| 1,1,2-Trichloro-1,2,2-trifluoroethane (R113) | <0.0050 | <0.0050 | <0.0050 | <0.0050 | 0.0050 |
| 1,3,5-Trimethylbenzene | <0.0050 | <0.0050 | <0.0050 | <0.0050 | 0.0050 |
| 1,2,4-Trimethylbenzene | <0.0050 | <0.0050 | <0.0050 | <0.0050 | 0.0050 |
| Vinyl chloride | <0.0050 | <0.0050 | <0.0050 | <0.0050 | 0.0050 |
| o-Xylene | <0.0020 | <0.0020 | <0.0020 | <0.0020 | 0.0020 |
| m,p-Xylenes | <0.0020 | <0.0020 | <0.0020 | <0.0020 | 0.0020 |
| **Surrogates** | | | | | **%REC Limits** |
| 4-Bromofluorobenzene | 139% | 168% [4] | 100% | 136% | 70-140 |
| Dibromofluoromethane | 143% [4] | 140% | 130% | 96% | 70-140 |
| Toluene-d8 | 118% | 138% | 101% | 116% | 70-140 |

**Viorel Vasile**
Operations Manager

# LABORATORY ANALYSIS RESULTS

**Client:** Stantec (TO)
**Project No:** 2057123300
**Project Name:** Grayson Power Plant Glendale Phase II
**Method:** VOCs, OXY & TPHG by GC/MS EPA 5035

**AA Project No:** A732177
**Date Received:** 04/29/16
**Date Reported:** 05/24/16
**Units:** mg/kg

| | | | | | |
|---|---|---|---|---|---|
| **Date Sampled:** | 04/29/16 | 04/29/16 | 04/29/16 | 04/29/16 | |
| **Date Prepared:** | 05/11/16 | 05/11/16 | 05/11/16 | 05/11/16 | |
| **Date Analyzed:** | 05/11/16 | 05/11/16 | 05/11/16 | 05/11/16 | |
| **AA ID No:** | 6D29007-10 | 6D29007-11 | 6D29007-13 | 6D29007-14 | |
| **Client ID No:** | SB-2-10 | SB-2-20 | SB-1-5 | SB-1-10 | |
| **Matrix:** | Soil | Soil | Soil | Soil | |
| **Dilution Factor:** | 1 | 1 | 1 | 1 | MRL |
| **8260B/5035 +OXY+TPHG (EPA 8260B/5035)** | | | | | |
| Acetone | <0.050 | <0.050 | <0.050 | <0.050 | 0.050 |
| tert-Amyl Methyl Ether (TAME) | <0.0050 | <0.0050 | <0.0050 | <0.0050 | 0.0050 |
| Benzene | <0.0020 | <0.0020 | <0.0020 | <0.0020 | 0.0020 |
| Bromobenzene | <0.0050 | <0.0050 | <0.0050 | <0.0050 | 0.0050 |
| Bromochloromethane | <0.0050 | <0.0050 | <0.0050 | <0.0050 | 0.0050 |
| Bromodichloromethane | <0.0050 | <0.0050 | <0.0050 | <0.0050 | 0.0050 |
| Bromoform | <0.0050 | <0.0050 | <0.0050 | <0.0050 | 0.0050 |
| Bromomethane | <0.0050 | <0.0050 | <0.0050 | <0.0050 | 0.0050 |
| 2-Butanone (MEK) | <0.050 | <0.050 | <0.050 | <0.050 | 0.050 |
| tert-Butyl alcohol (TBA) | <0.020 | <0.020 | <0.020 | <0.020 | 0.020 |
| sec-Butylbenzene | <0.0050 | <0.0050 | <0.0050 | <0.0050 | 0.0050 |
| tert-Butylbenzene | <0.0050 | <0.0050 | <0.0050 | <0.0050 | 0.0050 |
| n-Butylbenzene | <0.0050 | <0.0050 | <0.0050 | <0.0050 | 0.0050 |
| Carbon Disulfide | <0.0050 | <0.0050 | <0.0050 | <0.0050 | 0.0050 |
| Carbon Tetrachloride | <0.0050 | <0.0050 | <0.0050 | <0.0050 | 0.0050 |
| Chlorobenzene | <0.0050 | <0.0050 | <0.0050 | <0.0050 | 0.0050 |
| Chloroethane | <0.0050 | <0.0050 | <0.0050 | <0.0050 | 0.0050 |
| Chloroform | <0.0050 | <0.0050 | <0.0050 | <0.0050 | 0.0050 |
| Chloromethane | <0.0050 | <0.0050 | <0.0050 | <0.0050 | 0.0050 |
| 2-Chlorotoluene | <0.0050 | <0.0050 | <0.0050 | <0.0050 | 0.0050 |
| 4-Chlorotoluene | <0.0050 | <0.0050 | <0.0050 | <0.0050 | 0.0050 |
| 1,2-Dibromo-3-chloropropane | <0.010 | <0.010 | <0.010 | <0.010 | 0.010 |
| Dibromochloromethane | <0.0050 | <0.0050 | <0.0050 | <0.0050 | 0.0050 |
| 1,2-Dibromoethane (EDB) | <0.0050 | <0.0050 | <0.0050 | <0.0050 | 0.0050 |
| Dibromomethane | <0.0050 | <0.0050 | <0.0050 | <0.0050 | 0.0050 |
| 1,4-Dichlorobenzene | <0.0050 | <0.0050 | <0.0050 | <0.0050 | 0.0050 |
| 1,3-Dichlorobenzene | <0.0050 | <0.0050 | <0.0050 | <0.0050 | 0.0050 |

**Viorel Vasile**
Operations Manager

# LABORATORY ANALYSIS RESULTS

**Client:** Stantec (TO)
**Project No:** 2057123300
**Project Name:** Grayson Power Plant Glendale Phase II
**Method:** VOCs, OXY & TPHG by GC/MS EPA 5035

**AA Project No:** A732177
**Date Received:** 04/29/16
**Date Reported:** 05/24/16
**Units:** mg/kg

| | | | | | |
|---|---|---|---|---|---|
| **Date Sampled:** | 04/29/16 | 04/29/16 | 04/29/16 | 04/29/16 | |
| **Date Prepared:** | 05/11/16 | 05/11/16 | 05/11/16 | 05/11/16 | |
| **Date Analyzed:** | 05/11/16 | 05/11/16 | 05/11/16 | 05/11/16 | |
| **AA ID No:** | 6D29007-10 | 6D29007-11 | 6D29007-13 | 6D29007-14 | |
| **Client ID No:** | SB-2-10 | SB-2-20 | SB-1-5 | SB-1-10 | |
| **Matrix:** | Soil | Soil | Soil | Soil | |
| **Dilution Factor:** | 1 | 1 | 1 | 1 | MRL |
| **8260B/5035 +OXY+TPHG (EPA 8260B/5035) (continued)** | | | | | |
| 1,2-Dichlorobenzene | <0.0050 | <0.0050 | <0.0050 | <0.0050 | 0.0050 |
| Dichlorodifluoromethane (R12) | <0.0050 | <0.0050 | <0.0050 | <0.0050 | 0.0050 |
| 1,1-Dichloroethane | <0.0050 | <0.0050 | <0.0050 | <0.0050 | 0.0050 |
| 1,2-Dichloroethane (EDC) | <0.0050 | <0.0050 | <0.0050 | <0.0050 | 0.0050 |
| trans-1,2-Dichloroethylene | <0.0050 | <0.0050 | <0.0050 | <0.0050 | 0.0050 |
| cis-1,2-Dichloroethylene | <0.0050 | <0.0050 | <0.0050 | <0.0050 | 0.0050 |
| 1,1-Dichloroethylene | <0.0050 | <0.0050 | <0.0050 | <0.0050 | 0.0050 |
| 2,2-Dichloropropane | <0.0050 | <0.0050 | <0.0050 | <0.0050 | 0.0050 |
| 1,3-Dichloropropane | <0.0050 | <0.0050 | <0.0050 | <0.0050 | 0.0050 |
| 1,2-Dichloropropane | <0.0050 | <0.0050 | <0.0050 | <0.0050 | 0.0050 |
| trans-1,3-Dichloropropylene | <0.0050 | <0.0050 | <0.0050 | <0.0050 | 0.0050 |
| 1,1-Dichloropropylene | <0.0050 | <0.0050 | <0.0050 | <0.0050 | 0.0050 |
| cis-1,3-Dichloropropylene | <0.0050 | <0.0050 | <0.0050 | <0.0050 | 0.0050 |
| Diisopropyl ether (DIPE) | <0.0050 | <0.0050 | <0.0050 | <0.0050 | 0.0050 |
| Ethylbenzene | <0.0020 | <0.0020 | <0.0020 | <0.0020 | 0.0020 |
| Ethyl-tert-Butyl Ether (ETBE) | <0.0050 | <0.0050 | <0.0050 | <0.0050 | 0.0050 |
| Gasoline Range Organics (GRO) | <0.50 | <0.50 | <0.50 | <0.50 | 0.50 |
| Hexachlorobutadiene | <0.010 | <0.010 | <0.010 | <0.010 | 0.010 |
| 2-Hexanone (MBK) | <0.050 | <0.050 | <0.050 | <0.050 | 0.050 |
| Isopropylbenzene | <0.0050 | <0.0050 | <0.0050 | <0.0050 | 0.0050 |
| 4-Isopropyltoluene | <0.0050 | <0.0050 | <0.0050 | <0.0050 | 0.0050 |
| Methyl-tert-Butyl Ether (MTBE) | <0.0050 | <0.0050 | <0.0050 | <0.0050 | 0.0050 |
| Methylene Chloride | <0.050 | <0.050 | <0.050 | <0.050 | 0.050 |
| 4-Methyl-2-pentanone (MIBK) | <0.050 | <0.050 | <0.050 | <0.050 | 0.050 |
| Naphthalene | <0.010 | <0.010 | <0.010 | <0.010 | 0.010 |
| n-Propylbenzene | <0.0050 | <0.0050 | <0.0050 | <0.0050 | 0.0050 |

**Viorel Vasile**
Operations Manager

# LABORATORY ANALYSIS RESULTS

**Client:** Stantec (TO)
**Project No:** 2057123300
**Project Name:** Grayson Power Plant Glendale Phase II
**Method:** VOCs, OXY & TPHG by GC/MS EPA 5035

**AA Project No:** A732177
**Date Received:** 04/29/16
**Date Reported:** 05/24/16
**Units:** mg/kg

| | | | | | |
|---|---|---|---|---|---|
| **Date Sampled:** | 04/29/16 | 04/29/16 | 04/29/16 | 04/29/16 | |
| **Date Prepared:** | 05/11/16 | 05/11/16 | 05/11/16 | 05/11/16 | |
| **Date Analyzed:** | 05/11/16 | 05/11/16 | 05/11/16 | 05/11/16 | |
| **AA ID No:** | 6D29007-10 | 6D29007-11 | 6D29007-13 | 6D29007-14 | |
| **Client ID No:** | SB-2-10 | SB-2-20 | SB-1-5 | SB-1-10 | |
| **Matrix:** | Soil | Soil | Soil | Soil | |
| **Dilution Factor:** | 1 | 1 | 1 | 1 | MRL |
| **8260B/5035 +OXY+TPHG (EPA 8260B/5035) (continued)** | | | | | |
| Styrene | <0.0050 | <0.0050 | <0.0050 | <0.0050 | 0.0050 |
| 1,1,1,2-Tetrachloroethane | <0.0050 | <0.0050 | <0.0050 | <0.0050 | 0.0050 |
| 1,1,2,2-Tetrachloroethane | <0.0050 | <0.0050 | <0.0050 | <0.0050 | 0.0050 |
| Tetrachloroethylene (PCE) | <0.0050 | <0.0050 | <0.0050 | <0.0050 | 0.0050 |
| Toluene | <0.0020 | <0.0020 | <0.0020 | <0.0020 | 0.0020 |
| 1,2,4-Trichlorobenzene | <0.0050 | <0.0050 | <0.0050 | <0.0050 | 0.0050 |
| 1,2,3-Trichlorobenzene | <0.0050 | <0.0050 | <0.0050 | <0.0050 | 0.0050 |
| 1,1,2-Trichloroethane | <0.0050 | <0.0050 | <0.0050 | <0.0050 | 0.0050 |
| 1,1,1-Trichloroethane | <0.0050 | <0.0050 | <0.0050 | <0.0050 | 0.0050 |
| Trichloroethylene (TCE) | <0.0050 | <0.0050 | <0.0050 | <0.0050 | 0.0050 |
| Trichlorofluoromethane (R11) | <0.0050 | <0.0050 | <0.0050 | <0.0050 | 0.0050 |
| 1,2,3-Trichloropropane | <0.0050 | <0.0050 | <0.0050 | <0.0050 | 0.0050 |
| 1,1,2-Trichloro-1,2,2-trifluoroethane (R113) | <0.0050 | <0.0050 | <0.0050 | <0.0050 | 0.0050 |
| 1,3,5-Trimethylbenzene | <0.0050 | <0.0050 | <0.0050 | <0.0050 | 0.0050 |
| 1,2,4-Trimethylbenzene | <0.0050 | <0.0050 | <0.0050 | <0.0050 | 0.0050 |
| Vinyl chloride | <0.0050 | <0.0050 | <0.0050 | <0.0050 | 0.0050 |
| o-Xylene | <0.0020 | <0.0020 | <0.0020 | <0.0020 | 0.0020 |
| m,p-Xylenes | <0.0020 | <0.0020 | <0.0020 | <0.0020 | 0.0020 |
| **Surrogates** | | | | | **%REC Limits** |
| 4-Bromofluorobenzene | 131% | 136% | 132% | 156% [4] | 70-140 |
| Dibromofluoromethane | 129% | 114% | 133% | 104% | 70-140 |
| Toluene-d8 | 114% | 124% | 126% | 124% | 70-140 |

**Viorel Vasile**
Operations Manager

# LABORATORY ANALYSIS RESULTS

**Client:** Stantec (TO)
**Project No:** 2057123300
**Project Name:** Grayson Power Plant Glendale Phase II
**Method:** VOCs, OXY & TPHG by GC/MS EPA 5035

**AA Project No:** A732177
**Date Received:** 04/29/16
**Date Reported:** 05/24/16
**Units:** mg/kg

| | | | |
|---|---|---|---|
| **Date Sampled:** | 04/29/16 | 04/29/16 | |
| **Date Prepared:** | 05/11/16 | 05/11/16 | |
| **Date Analyzed:** | 05/11/16 | 05/11/16 | |
| **AA ID No:** | 6D29007-18 | 6D29007-19 | |
| **Client ID No:** | SB-4-10 | SB-4-20 | |
| **Matrix:** | Soil | Soil | |
| **Dilution Factor:** | 1 | 1 | MRL |
| **8260B/5035 +OXY+TPHG (EPA 8260B/5035)** | | | |
| Acetone | <0.050 | <0.050 | 0.050 |
| tert-Amyl Methyl Ether (TAME) | <0.0050 | <0.0050 | 0.0050 |
| Benzene | <0.0020 | <0.0020 | 0.0020 |
| Bromobenzene | <0.0050 | <0.0050 | 0.0050 |
| Bromochloromethane | <0.0050 | <0.0050 | 0.0050 |
| Bromodichloromethane | <0.0050 | <0.0050 | 0.0050 |
| Bromoform | <0.0050 | <0.0050 | 0.0050 |
| Bromomethane | <0.0050 | <0.0050 | 0.0050 |
| 2-Butanone (MEK) | <0.050 | <0.050 | 0.050 |
| tert-Butyl alcohol (TBA) | <0.020 | <0.020 | 0.020 |
| sec-Butylbenzene | <0.0050 | <0.0050 | 0.0050 |
| tert-Butylbenzene | <0.0050 | <0.0050 | 0.0050 |
| n-Butylbenzene | <0.0050 | <0.0050 | 0.0050 |
| Carbon Disulfide | <0.0050 | <0.0050 | 0.0050 |
| Carbon Tetrachloride | <0.0050 | <0.0050 | 0.0050 |
| Chlorobenzene | <0.0050 | <0.0050 | 0.0050 |
| Chloroethane | <0.0050 | <0.0050 | 0.0050 |
| Chloroform | <0.0050 | <0.0050 | 0.0050 |
| Chloromethane | <0.0050 | <0.0050 | 0.0050 |
| 2-Chlorotoluene | <0.0050 | <0.0050 | 0.0050 |
| 4-Chlorotoluene | <0.0050 | <0.0050 | 0.0050 |
| 1,2-Dibromo-3-chloropropane | <0.010 | <0.010 | 0.010 |
| Dibromochloromethane | <0.0050 | <0.0050 | 0.0050 |
| 1,2-Dibromoethane (EDB) | <0.0050 | <0.0050 | 0.0050 |
| Dibromomethane | <0.0050 | <0.0050 | 0.0050 |
| 1,4-Dichlorobenzene | <0.0050 | <0.0050 | 0.0050 |
| 1,3-Dichlorobenzene | <0.0050 | <0.0050 | 0.0050 |

**Viorel Vasile**
Operations Manager

# LABORATORY ANALYSIS RESULTS

**Client:** Stantec (TO)
**Project No:** 2057123300
**Project Name:** Grayson Power Plant Glendale Phase II
**Method:** VOCs, OXY & TPHG by GC/MS EPA 5035

**AA Project No:** A732177
**Date Received:** 04/29/16
**Date Reported:** 05/24/16
**Units:** mg/kg

| | | | |
|---|---|---|---|
| **Date Sampled:** | 04/29/16 | 04/29/16 | |
| **Date Prepared:** | 05/11/16 | 05/11/16 | |
| **Date Analyzed:** | 05/11/16 | 05/11/16 | |
| **AA ID No:** | 6D29007-18 | 6D29007-19 | |
| **Client ID No:** | SB-4-10 | SB-4-20 | |
| **Matrix:** | Soil | Soil | |
| **Dilution Factor:** | 1 | 1 | MRL |
| **8260B/5035 +OXY+TPHG (EPA 8260B/5035) (continued)** | | | |
| 1,2-Dichlorobenzene | <0.0050 | <0.0050 | 0.0050 |
| Dichlorodifluoromethane (R12) | <0.0050 | <0.0050 | 0.0050 |
| 1,1-Dichloroethane | <0.0050 | <0.0050 | 0.0050 |
| 1,2-Dichloroethane (EDC) | <0.0050 | <0.0050 | 0.0050 |
| trans-1,2-Dichloroethylene | <0.0050 | <0.0050 | 0.0050 |
| cis-1,2-Dichloroethylene | <0.0050 | <0.0050 | 0.0050 |
| 1,1-Dichloroethylene | <0.0050 | <0.0050 | 0.0050 |
| 2,2-Dichloropropane | <0.0050 | <0.0050 | 0.0050 |
| 1,3-Dichloropropane | <0.0050 | <0.0050 | 0.0050 |
| 1,2-Dichloropropane | <0.0050 | <0.0050 | 0.0050 |
| trans-1,3-Dichloropropylene | <0.0050 | <0.0050 | 0.0050 |
| 1,1-Dichloropropylene | <0.0050 | <0.0050 | 0.0050 |
| cis-1,3-Dichloropropylene | <0.0050 | <0.0050 | 0.0050 |
| Diisopropyl ether (DIPE) | <0.0050 | <0.0050 | 0.0050 |
| Ethylbenzene | <0.0020 | <0.0020 | 0.0020 |
| Ethyl-tert-Butyl Ether (ETBE) | <0.0050 | <0.0050 | 0.0050 |
| Gasoline Range Organics (GRO) | <0.50 | <0.50 | 0.50 |
| Hexachlorobutadiene | <0.010 | <0.010 | 0.010 |
| 2-Hexanone (MBK) | <0.050 | <0.050 | 0.050 |
| Isopropylbenzene | <0.0050 | <0.0050 | 0.0050 |
| 4-Isopropyltoluene | <0.0050 | <0.0050 | 0.0050 |
| Methyl-tert-Butyl Ether (MTBE) | <0.0050 | <0.0050 | 0.0050 |
| Methylene Chloride | <0.050 | <0.050 | 0.050 |
| 4-Methyl-2-pentanone (MIBK) | <0.050 | <0.050 | 0.050 |
| Naphthalene | <0.010 | <0.010 | 0.010 |
| n-Propylbenzene | <0.0050 | <0.0050 | 0.0050 |

**Viorel Vasile**
Operations Manager

# LABORATORY ANALYSIS RESULTS

**Client:** Stantec (TO)
**Project No:** 2057123300
**Project Name:** Grayson Power Plant Glendale Phase II
**Method:** VOCs, OXY & TPHG by GC/MS EPA 5035

**AA Project No:** A732177
**Date Received:** 04/29/16
**Date Reported:** 05/24/16
**Units:** mg/kg

| | | | |
|---|---|---|---|
| **Date Sampled:** | 04/29/16 | 04/29/16 | |
| **Date Prepared:** | 05/11/16 | 05/11/16 | |
| **Date Analyzed:** | 05/11/16 | 05/11/16 | |
| **AA ID No:** | 6D29007-18 | 6D29007-19 | |
| **Client ID No:** | SB-4-10 | SB-4-20 | |
| **Matrix:** | Soil | Soil | |
| **Dilution Factor:** | 1 | 1 | MRL |
| **8260B/5035 +OXY+TPHG (EPA 8260B/5035) (continued)** | | | |
| Styrene | <0.0050 | <0.0050 | 0.0050 |
| 1,1,1,2-Tetrachloroethane | <0.0050 | <0.0050 | 0.0050 |
| 1,1,2,2-Tetrachloroethane | <0.0050 | <0.0050 | 0.0050 |
| Tetrachloroethylene (PCE) | <0.0050 | <0.0050 | 0.0050 |
| Toluene | <0.0020 | <0.0020 | 0.0020 |
| 1,2,4-Trichlorobenzene | <0.0050 | <0.0050 | 0.0050 |
| 1,2,3-Trichlorobenzene | <0.0050 | <0.0050 | 0.0050 |
| 1,1,2-Trichloroethane | <0.0050 | <0.0050 | 0.0050 |
| 1,1,1-Trichloroethane | <0.0050 | <0.0050 | 0.0050 |
| Trichloroethylene (TCE) | <0.0050 | <0.0050 | 0.0050 |
| Trichlorofluoromethane (R11) | <0.0050 | <0.0050 | 0.0050 |
| 1,2,3-Trichloropropane | <0.0050 | <0.0050 | 0.0050 |
| 1,1,2-Trichloro-1,2,2-trifluoroethane (R113) | <0.0050 | <0.0050 | 0.0050 |
| 1,3,5-Trimethylbenzene | <0.0050 | <0.0050 | 0.0050 |
| 1,2,4-Trimethylbenzene | <0.0050 | <0.0050 | 0.0050 |
| Vinyl chloride | <0.0050 | <0.0050 | 0.0050 |
| o-Xylene | <0.0020 | <0.0020 | 0.0020 |
| m,p-Xylenes | <0.0020 | <0.0020 | 0.0020 |
| **Surrogates** | | | **%REC Limits** |
| 4-Bromofluorobenzene | 140% | 148% [4] | 70-140 |
| Dibromofluoromethane | 134% | 113% | 70-140 |
| Toluene-d8 | 119% | 122% | 70-140 |

**Viorel Vasile**
Operations Manager

# LABORATORY ANALYSIS RESULTS

**Client:** Stantec (TO)
**Project No:** 2057123300
**Project Name:** Grayson Power Plant Glendale Phase II
**Method:** Carbon Chain by GC/FID

**AA Project No:** A732177
**Date Received:** 04/29/16
**Date Reported:** 05/24/16
**Units:** mg/kg

| | | | | | |
|---|---|---|---|---|---|
| **Date Sampled:** | 04/29/16 | 04/29/16 | 04/29/16 | 04/29/16 | |
| **Date Prepared:** | 05/04/16 | 05/04/16 | 05/04/16 | 05/04/16 | |
| **Date Analyzed:** | 05/05/16 | 05/05/16 | 05/05/16 | 05/04/16 | |
| **AA ID No:** | 6D29007-02 | 6D29007-03 | 6D29007-06 | 6D29007-07 | |
| **Client ID No:** | SB-10-10 | SB-10-15 | SB-13-5 | SB-13-15 | |
| **Matrix:** | Soil | Soil | Soil | Soil | |
| **Dilution Factor:** | 5 | 1 | 1 | 1 | MRL |
| **Carbon Chain Characterization 8015M (EPA 8015M)** | | | | | |
| C6-C8 | <5.0 | <1.0 | <1.0 | <1.0 | 1.0 |
| C8-C10 | <5.0 | **1.6** | **1.0** | <1.0 | 1.0 |
| C10-C12 | <5.0 | **1.3** | <1.0 | <1.0 | 1.0 |
| C12-C14 | <5.0 | **3.0** | <1.0 | <1.0 | 1.0 |
| C14-C16 | <5.0 | <1.0 | <1.0 | **1.4** | 1.0 |
| C16-C18 | <5.0 | <1.0 | <1.0 | <1.0 | 1.0 |
| C18-C20 | **13** | <1.0 | <1.0 | <1.0 | 1.0 |
| C20-C22 | **24** | <1.0 | <1.0 | <1.0 | 1.0 |
| C22-C24 | **49** | <1.0 | <1.0 | <1.0 | 1.0 |
| C24-C26 | **62** | <1.0 | <1.0 | <1.0 | 1.0 |
| C26-C28 | **80** | <1.0 | <1.0 | <1.0 | 1.0 |
| C28-C32 | **200** | <1.0 | <1.0 | <1.0 | 1.0 |
| C32-C34 | **76** | <1.0 | <1.0 | <1.0 | 1.0 |
| C34-C36 | **40** | <1.0 | <1.0 | <1.0 | 1.0 |
| C36-C40 | **48** | <1.0 | <1.0 | <1.0 | 1.0 |
| C40-C44 | **20** | <1.0 | <1.0 | <1.0 | 1.0 |
| TPH (C6-C44) | **610** | <10 | <10 | <10 | 10 |
| **Surrogates** | | | | | **%REC Limits** |
| o-Terphenyl | 116% | 91% | 91% | 91% | 50-150 |

**Viorel Vasile**
Operations Manager

# LABORATORY ANALYSIS RESULTS

**Client:** Stantec (TO)
**Project No:** 2057123300
**Project Name:** Grayson Power Plant Glendale Phase II
**Method:** Carbon Chain by GC/FID

**AA Project No:** A732177
**Date Received:** 04/29/16
**Date Reported:** 05/24/16
**Units:** mg/kg

| | | | | | |
|---|---|---|---|---|---|
| **Date Sampled:** | 04/29/16 | 04/29/16 | 04/29/16 | 04/29/16 | |
| **Date Prepared:** | 05/04/16 | 05/04/16 | 05/04/16 | 05/04/16 | |
| **Date Analyzed:** | 05/04/16 | 05/05/16 | 05/05/16 | 05/05/16 | |
| **AA ID No:** | 6D29007-10 | 6D29007-11 | 6D29007-13 | 6D29007-14 | |
| **Client ID No:** | SB-2-10 | SB-2-20 | SB-1-5 | SB-1-10 | |
| **Matrix:** | Soil | Soil | Soil | Soil | |
| **Dilution Factor:** | 1 | 1 | 1 | 10 | MRL |
| **Carbon Chain Characterization 8015M (EPA 8015M)** | | | | | |
| C6-C8 | <1.0 | <1.0 | <1.0 | <10 | 1.0 |
| C8-C10 | <1.0 | **2.7** | <1.0 | <10 | 1.0 |
| C10-C12 | <1.0 | <1.0 | <1.0 | <10 | 1.0 |
| C12-C14 | <1.0 | <1.0 | <1.0 | **36** | 1.0 |
| C14-C16 | <1.0 | **1.1** | <1.0 | **170** | 1.0 |
| C16-C18 | <1.0 | <1.0 | **2.6** | **310** | 1.0 |
| C18-C20 | <1.0 | <1.0 | **5.6** | **440** | 1.0 |
| C20-C22 | <1.0 | <1.0 | **9.6** | **620** | 1.0 |
| C22-C24 | <1.0 | <1.0 | **18** | **800** | 1.0 |
| C24-C26 | <1.0 | <1.0 | **18** | **1000** | 1.0 |
| C26-C28 | <1.0 | **1.8** | **33** | **1200** | 1.0 |
| C28-C32 | <1.0 | <1.0 | **96** | **2500** | 1.0 |
| C32-C34 | <1.0 | <1.0 | **26** | **640** | 1.0 |
| C34-C36 | <1.0 | <1.0 | **23** | **280** | 1.0 |
| C36-C40 | <1.0 | <1.0 | **37** | **440** | 1.0 |
| C40-C44 | <1.0 | <1.0 | **11** | **270** | 1.0 |
| TPH (C6-C44) | <10 | <10 | **280** | **8700** | 10 |
| **Surrogates** | | | | | **%REC Limits** |
| o-Terphenyl | 97% | 88% | 113% | 91% | 50-150 |

**Viorel Vasile**
Operations Manager

# LABORATORY ANALYSIS RESULTS

**Client:** Stantec (TO)
**Project No:** 2057123300
**Project Name:** Grayson Power Plant Glendale Phase II
**Method:** Carbon Chain by GC/FID

**AA Project No:** A732177
**Date Received:** 04/29/16
**Date Reported:** 05/24/16
**Units:** mg/kg

| | | | |
|---|---|---|---|
| **Date Sampled:** | 04/29/16 | 04/29/16 | |
| **Date Prepared:** | 05/04/16 | 05/04/16 | |
| **Date Analyzed:** | 05/05/16 | 05/05/16 | |
| **AA ID No:** | 6D29007-18 | 6D29007-19 | |
| **Client ID No:** | SB-4-10 | SB-4-20 | |
| **Matrix:** | Soil | Soil | |
| **Dilution Factor:** | 1 | 1 | MRL |
| **Carbon Chain Characterization 8015M (EPA 8015M)** | | | |
| C6-C8 | <1.0 | <1.0 | 1.0 |
| C8-C10 | <1.0 | <1.0 | 1.0 |
| C10-C12 | <1.0 | <1.0 | 1.0 |
| C12-C14 | <1.0 | <1.0 | 1.0 |
| C14-C16 | <1.0 | <1.0 | 1.0 |
| C16-C18 | <1.0 | <1.0 | 1.0 |
| C18-C20 | <1.0 | <1.0 | 1.0 |
| C20-C22 | <1.0 | <1.0 | 1.0 |
| C22-C24 | <1.0 | <1.0 | 1.0 |
| C24-C26 | <1.0 | <1.0 | 1.0 |
| C26-C28 | <1.0 | <1.0 | 1.0 |
| C28-C32 | **1.0** | <1.0 | 1.0 |
| C32-C34 | <1.0 | <1.0 | 1.0 |
| C34-C36 | <1.0 | <1.0 | 1.0 |
| C36-C40 | <1.0 | <1.0 | 1.0 |
| C40-C44 | <1.0 | <1.0 | 1.0 |
| TPH (C6-C44) | <10 | <10 | 10 |
| **Surrogates** | | | **%REC Limits** |
| o-Terphenyl | 82% | 105% | 50-150 |

**Viorel Vasile**
Operations Manager

# LABORATORY ANALYSIS RESULTS

**Client:** Stantec (TO)
**Project No:** 2057123300
**Project Name:** Grayson Power Plant Glendale Phase II
**Method:** Total Metals CAM 17

**AA Project No:** A732177
**Date Received:** 04/29/16
**Date Reported:** 05/24/16
**Units:** mg/kg

| | | | | | |
|---|---|---|---|---|---|
| **Date Sampled:** | 04/29/16 | 04/29/16 | 04/29/16 | 04/29/16 | |
| **Date Prepared:** | 05/02/16 | 05/02/16 | 05/02/16 | 05/02/16 | |
| **Date Analyzed:** | 05/03/16 | 05/03/16 | 05/03/16 | 05/03/16 | |
| **AA ID No:** | 6D29007-01 | 6D29007-05 | 6D29007-09 | 6D29007-12 | |
| **Client ID No:** | SB-10-1 | SB-13-1 | SB-2-1 | SB-1-1 | |
| **Matrix:** | Soil | Soil | Soil | Soil | |
| **Dilution Factor:** | 1 | 1 | 1 | 1 | MRL |
| **CAM Metals Less Hg 6000/7000 (EPA 6010B/7000)** | | | | | |
| Antimony | <10 | <10 | <10 | <10 | 10 |
| Arsenic | **3.6** | **1.5** | **1.2** | **1.4** | 0.50 |
| Barium | **140** | **96** | **48** | **90** | 10 |
| Beryllium | <1.0 | <1.0 | <1.0 | <1.0 | 1.0 |
| Cadmium | <1.0 | <1.0 | <1.0 | <1.0 | 1.0 |
| Chromium | **16** | **9.3** | **11** | **12** | 3.0 |
| Cobalt | **13** | **6.6** | **13** | **11** | 3.0 |
| Copper | **18** | **18** | **4.2** | **30** | 3.0 |
| Lead | **7.1** | **56** | <3.0 | **25** | 3.0 |
| Molybdenum | <5.0 | <5.0 | <5.0 | <5.0 | 5.0 |
| Nickel | **12** | **6.6** | **7.1** | **12** | 3.0 |
| Selenium | <0.50 | <0.50 | <0.50 | <0.50 | 0.50 |
| Silver | <1.0 | <1.0 | <1.0 | <1.0 | 1.0 |
| Thallium | <5.0 | <5.0 | <5.0 | <5.0 | 5.0 |
| Vanadium | **58** | **35** | **68** | **37** | 10 |
| Zinc | **91** | **130** | **90** | **200** | 3.0 |

**Viorel Vasile**
Operations Manager

# LABORATORY ANALYSIS RESULTS

| | | | |
|---|---|---|---|
| **Client:** | Stantec (TO) | **AA Project No:** | A732177 |
| **Project No:** | 2057123300 | **Date Received:** | 04/29/16 |
| **Project Name:** | Grayson Power Plant Glendale Phase II | **Date Reported:** | 05/24/16 |
| **Method:** | Total Metals CAM 17 | **Units:** | mg/kg |

| | | |
|---|---|---|
| **Date Sampled:** | 04/29/16 | |
| **Date Prepared:** | 05/02/16 | |
| **Date Analyzed:** | 05/03/16 | |
| **AA ID No:** | 6D29007-17 | |
| **Client ID No:** | SB-4-1 | |
| **Matrix:** | Soil | |
| **Dilution Factor:** | 1 | MRL |

**CAM Metals Less Hg 6000/7000 (EPA 6010B/7000)**

| | | |
|---|---|---|
| Antimony | <10 | 10 |
| Arsenic | **0.60** | 0.50 |
| Barium | **180** | 10 |
| Beryllium | <1.0 | 1.0 |
| Cadmium | <1.0 | 1.0 |
| Chromium | **10** | 3.0 |
| Cobalt | **13** | 3.0 |
| Copper | **19** | 3.0 |
| Lead | **4.0** | 3.0 |
| Molybdenum | <5.0 | 5.0 |
| Nickel | **7.6** | 3.0 |
| Selenium | <0.50 | 0.50 |
| Silver | <1.0 | 1.0 |
| Thallium | <5.0 | 5.0 |
| Vanadium | **60** | 10 |
| Zinc | **77** | 3.0 |

**Viorel Vasile**
Operations Manager

# LABORATORY ANALYSIS RESULTS

**Client:** Stantec (TO)
**Project No:** 2057123300
**Project Name:** Grayson Power Plant Glendale Phase II
**Method:** Total Metals CAM 17

**AA Project No:** A732177
**Date Received:** 04/29/16
**Date Reported:** 05/24/16
**Units:** mg/kg

| | | | | | |
|---|---|---|---|---|---|
| **Date Sampled:** | 04/29/16 | 04/29/16 | 04/29/16 | 04/29/16 | |
| **Date Prepared:** | 05/02/16 | 05/02/16 | 05/02/16 | 05/02/16 | |
| **Date Analyzed:** | 05/02/16 | 05/02/16 | 05/02/16 | 05/02/16 | |
| **AA ID No:** | 6D29007-01 | 6D29007-05 | 6D29007-09 | 6D29007-12 | |
| **Client ID No:** | SB-10-1 | SB-13-1 | SB-2-1 | SB-1-1 | |
| **Matrix:** | Soil | Soil | Soil | Soil | |
| **Dilution Factor:** | 1 | 1 | 1 | 1 | MRL |
| **Mercury Total EPA 7470A/7471A (EPA 7471A)** | | | | | |
| Mercury | **0.086** | **0.080** | **0.020** | **0.11** | 0.020 |

**Viorel Vasile**
Operations Manager

# LABORATORY ANALYSIS RESULTS

| | | | |
|---|---|---|---|
| **Client:** | Stantec (TO) | **AA Project No:** | A732177 |
| **Project No:** | 2057123300 | **Date Received:** | 04/29/16 |
| **Project Name:** | Grayson Power Plant Glendale Phase II | **Date Reported:** | 05/24/16 |
| **Method:** | Total Metals CAM 17 | **Units:** | mg/kg |

| | | |
|---|---|---|
| **Date Sampled:** | 04/29/16 | |
| **Date Prepared:** | 05/02/16 | |
| **Date Analyzed:** | 05/02/16 | |
| **AA ID No:** | 6D29007-17 | |
| **Client ID No:** | SB-4-1 | |
| **Matrix:** | Soil | |
| **Dilution Factor:** | 1 | MRL |

**Mercury Total EPA 7470A/7471A (EPA 7471A)**

| | | |
|---|---|---|
| Mercury | **0.021** | 0.020 |

**Viorel Vasile**
Operations Manager

# LABORATORY ANALYSIS RESULTS

| | | | |
|---|---|---|---|
| **Client:** | Stantec (TO) | **AA Project No:** | A732177 |
| **Project No:** | 2057123300 | **Date Received:** | 04/29/16 |
| **Project Name:** | Grayson Power Plant Glendale Phase II | **Date Reported:** | 05/24/16 |
| **Method:** | Soluble Metals STLC by ICP | **Units:** | mg/L |

| | | |
|---|---|---|
| **Date Sampled:** | 04/29/16 | |
| **Date Prepared:** | 05/04/16 | |
| **Date Analyzed:** | 05/05/16 | |
| **AA ID No:** | 6D29007-16 | |
| **Client ID No:** | Drum Profile | |
| **Matrix:** | Soil | |
| **Dilution Factor:** | 1 | MRL |
| **Metals STLC (EPA 6010B)** | | |
| Lead | <0.50 | 0.50 |

**Viorel Vasile**
Operations Manager

# LABORATORY ANALYSIS RESULTS

| | | | |
|---|---|---|---|
| **Client:** | Stantec (TO) | **AA Project No:** | A732177 |
| **Project No:** | 2057123300 | **Date Received:** | 04/29/16 |
| **Project Name:** | Grayson Power Plant Glendale Phase II | **Date Reported:** | 05/24/16 |
| **Method:** | Soluble Metals TCLP by ICP | **Units:** | mg/L |

| | | |
|---|---|---|
| **Date Sampled:** | 04/29/16 | |
| **Date Prepared:** | 05/03/16 | |
| **Date Analyzed:** | 05/05/16 | |
| **AA ID No:** | 6D29007-16 | |
| **Client ID No:** | Drum Profile | |
| **Matrix:** | Soil | |
| **Dilution Factor:** | 1 | MRL |
| **Metals TCLP (EPA 6010B)** | | |
| Lead | <0.50 | 0.50 |

**Viorel Vasile**
Operations Manager

# LABORATORY ANALYSIS RESULTS

**Client:** Stantec (TO)
**Project No:** 2057123300
**Project Name:** Grayson Power Plant Glendale Phase II

**AA Project No:** A732177
**Date Received:** 04/29/16
**Date Reported:** 05/24/16

| Analyte | Result | Reporting Limit | Units | Spike Level | Source Result | %REC | %REC Limits | RPD | RPD Limit | Notes |
|---|---|---|---|---|---|---|---|---|---|---|
| **Cations by Ion Chromatography - Quality Control** | | | | | | | | | | |
| *Batch B6E0428 - NO PREP* | | | | | | | | | | |
| **Blank (B6E0428-BLK1)** | | | | Prepared & Analyzed: 05/05/16 | | | | | | |
| Chromium (VI) | <0.040 | 0.040 | mg/kg | | | | | | | |
| **LCS (B6E0428-BS1)** | | | | Prepared & Analyzed: 05/05/16 | | | | | | |
| Chromium (VI) | **0.227** | 0.040 | mg/kg | 0.20 | | 113 | 80-120 | | | |
| **LCS Dup (B6E0428-BSD1)** | | | | Prepared & Analyzed: 05/05/16 | | | | | | |
| Chromium (VI) | **0.220** | 0.040 | mg/kg | 0.20 | | 110 | 80-120 | 2.95 | 20 | |
| **Duplicate (B6E0428-DUP1)** | | **Source: 6D28026-18** | | Prepared & Analyzed: 05/05/16 | | | | | | |
| Chromium (VI) | **<0.040** | 0.040 | mg/kg | | | | | | 40 | |
| **Matrix Spike (B6E0428-MS1)** | | **Source: 6D29007-06** | | Prepared & Analyzed: 05/05/16 | | | | | | |
| Chromium (VI) | **0.228** | 0.040 | mg/kg | 0.20 | <0.040 | 114 | 70-130 | | | |
| **Matrix Spike Dup (B6E0428-MSD1)** | | **Source: 6D29007-06** | | Prepared & Analyzed: 05/05/16 | | | | | | |
| Chromium (VI) | **0.225** | 0.040 | mg/kg | 0.20 | <0.040 | 113 | 70-130 | 1.10 | 40 | |
| **VOCs, OXY & TPHG by GC/MS EPA 5035 - Quality Control** | | | | | | | | | | |
| *Batch B6E1109 - EPA 5035* | | | | | | | | | | |
| **Blank (B6E1109-BLK1)** | | | | Prepared & Analyzed: 05/11/16 | | | | | | |
| Acetone | <0.050 | 0.050 | mg/kg | | | | | | | |
| tert-Amyl Methyl Ether (TAME) | <0.0050 | 0.0050 | mg/kg | | | | | | | |
| Benzene | <0.0020 | 0.0020 | mg/kg | | | | | | | |
| Bromobenzene | <0.0050 | 0.0050 | mg/kg | | | | | | | |
| Bromochloromethane | <0.0050 | 0.0050 | mg/kg | | | | | | | |
| Bromodichloromethane | <0.0050 | 0.0050 | mg/kg | | | | | | | |
| Bromoform | <0.0050 | 0.0050 | mg/kg | | | | | | | |
| Bromomethane | <0.0050 | 0.0050 | mg/kg | | | | | | | |
| 2-Butanone (MEK) | <0.050 | 0.050 | mg/kg | | | | | | | |
| tert-Butyl alcohol (TBA) | <0.020 | 0.020 | mg/kg | | | | | | | |
| sec-Butylbenzene | <0.0050 | 0.0050 | mg/kg | | | | | | | |
| tert-Butylbenzene | <0.0050 | 0.0050 | mg/kg | | | | | | | |
| n-Butylbenzene | <0.0050 | 0.0050 | mg/kg | | | | | | | |
| Carbon Disulfide | <0.0050 | 0.0050 | mg/kg | | | | | | | |
| Carbon Tetrachloride | <0.0050 | 0.0050 | mg/kg | | | | | | | |
| Chlorobenzene | <0.0050 | 0.0050 | mg/kg | | | | | | | |

**Viorel Vasile**
Operations Manager

# LABORATORY ANALYSIS RESULTS

**Client:** Stantec (TO)
**Project No:** 2057123300
**Project Name:** Grayson Power Plant Glendale Phase II

**AA Project No:** A732177
**Date Received:** 04/29/16
**Date Reported:** 05/24/16

| Analyte | Result | Reporting Limit | Units | Spike Level | Source Result | %REC | %REC Limits | RPD | RPD Limit | Notes |
|---|---|---|---|---|---|---|---|---|---|---|
| **VOCs, OXY & TPHG by GC/MS EPA 5035 - Quality Control** | | | | | | | | | | |
| *Batch B6E1109 - EPA 5035* | | | | | | | | | | |
| **Blank (B6E1109-BLK1) Continued** | | | | Prepared & Analyzed: 05/11/16 | | | | | | |
| Chloroethane | <0.0050 | 0.0050 | mg/kg | | | | | | | |
| Chloroform | <0.0050 | 0.0050 | mg/kg | | | | | | | |
| Chloromethane | <0.0050 | 0.0050 | mg/kg | | | | | | | |
| 2-Chlorotoluene | <0.0050 | 0.0050 | mg/kg | | | | | | | |
| 4-Chlorotoluene | <0.0050 | 0.0050 | mg/kg | | | | | | | |
| 1,2-Dibromo-3-chloropropane | <0.010 | 0.010 | mg/kg | | | | | | | |
| Dibromochloromethane | <0.0050 | 0.0050 | mg/kg | | | | | | | |
| 1,2-Dibromoethane (EDB) | <0.0050 | 0.0050 | mg/kg | | | | | | | |
| Dibromomethane | <0.0050 | 0.0050 | mg/kg | | | | | | | |
| 1,4-Dichlorobenzene | <0.0050 | 0.0050 | mg/kg | | | | | | | |
| 1,3-Dichlorobenzene | <0.0050 | 0.0050 | mg/kg | | | | | | | |
| 1,2-Dichlorobenzene | <0.0050 | 0.0050 | mg/kg | | | | | | | |
| Dichlorodifluoromethane (R12) | <0.0050 | 0.0050 | mg/kg | | | | | | | |
| 1,1-Dichloroethane | <0.0050 | 0.0050 | mg/kg | | | | | | | |
| 1,2-Dichloroethane (EDC) | <0.0050 | 0.0050 | mg/kg | | | | | | | |
| trans-1,2-Dichloroethylene | <0.0050 | 0.0050 | mg/kg | | | | | | | |
| cis-1,2-Dichloroethylene | <0.0050 | 0.0050 | mg/kg | | | | | | | |
| 1,1-Dichloroethylene | <0.0050 | 0.0050 | mg/kg | | | | | | | |
| 2,2-Dichloropropane | <0.0050 | 0.0050 | mg/kg | | | | | | | |
| 1,3-Dichloropropane | <0.0050 | 0.0050 | mg/kg | | | | | | | |
| 1,2-Dichloropropane | <0.0050 | 0.0050 | mg/kg | | | | | | | |
| trans-1,3-Dichloropropylene | <0.0050 | 0.0050 | mg/kg | | | | | | | |
| 1,1-Dichloropropylene | <0.0050 | 0.0050 | mg/kg | | | | | | | |
| cis-1,3-Dichloropropylene | <0.0050 | 0.0050 | mg/kg | | | | | | | |
| Diisopropyl ether (DIPE) | <0.0050 | 0.0050 | mg/kg | | | | | | | |
| Ethylbenzene | <0.0020 | 0.0020 | mg/kg | | | | | | | |
| Ethyl-tert-Butyl Ether (ETBE) | <0.0050 | 0.0050 | mg/kg | | | | | | | |
| Gasoline Range Organics (GRO) | <0.50 | 0.50 | mg/kg | | | | | | | |
| Hexachlorobutadiene | <0.010 | 0.010 | mg/kg | | | | | | | |
| 2-Hexanone (MBK) | <0.050 | 0.050 | mg/kg | | | | | | | |
| Isopropylbenzene | <0.0050 | 0.0050 | mg/kg | | | | | | | |

**Viorel Vasile**
Operations Manager

# LABORATORY ANALYSIS RESULTS

**Client:** Stantec (TO)
**Project No:** 2057123300
**Project Name:** Grayson Power Plant Glendale Phase II

**AA Project No:** A732177
**Date Received:** 04/29/16
**Date Reported:** 05/24/16

| Analyte | Result | Reporting Limit | Units | Spike Level | Source Result | %REC | %REC Limits | RPD | RPD Limit | Notes |
|---|---|---|---|---|---|---|---|---|---|---|
| **VOCs, OXY & TPHG by GC/MS EPA 5035 - Quality Control** | | | | | | | | | | |
| *Batch B6E1109 - EPA 5035* | | | | | | | | | | |
| **Blank (B6E1109-BLK1) Continued** | | | | Prepared & Analyzed: 05/11/16 | | | | | | |
| 4-Isopropyltoluene | <0.0050 | 0.0050 | mg/kg | | | | | | | |
| Methyl-tert-Butyl Ether (MTBE) | <0.0050 | 0.0050 | mg/kg | | | | | | | |
| Methylene Chloride | <0.050 | 0.050 | mg/kg | | | | | | | |
| 4-Methyl-2-pentanone (MIBK) | <0.050 | 0.050 | mg/kg | | | | | | | |
| Naphthalene | <0.010 | 0.010 | mg/kg | | | | | | | |
| n-Propylbenzene | <0.0050 | 0.0050 | mg/kg | | | | | | | |
| Styrene | <0.0050 | 0.0050 | mg/kg | | | | | | | |
| 1,1,1,2-Tetrachloroethane | <0.0050 | 0.0050 | mg/kg | | | | | | | |
| 1,1,2,2-Tetrachloroethane | <0.0050 | 0.0050 | mg/kg | | | | | | | |
| Tetrachloroethylene (PCE) | <0.0050 | 0.0050 | mg/kg | | | | | | | |
| Toluene | <0.0020 | 0.0020 | mg/kg | | | | | | | |
| 1,2,4-Trichlorobenzene | <0.0050 | 0.0050 | mg/kg | | | | | | | |
| 1,2,3-Trichlorobenzene | <0.0050 | 0.0050 | mg/kg | | | | | | | |
| 1,1,2-Trichloroethane | <0.0050 | 0.0050 | mg/kg | | | | | | | |
| 1,1,1-Trichloroethane | <0.0050 | 0.0050 | mg/kg | | | | | | | |
| Trichloroethylene (TCE) | <0.0050 | 0.0050 | mg/kg | | | | | | | |
| Trichlorofluoromethane (R11) | <0.0050 | 0.0050 | mg/kg | | | | | | | |
| 1,2,3-Trichloropropane | <0.0050 | 0.0050 | mg/kg | | | | | | | |
| 1,1,2-Trichloro-1,2,2-trifluoroethane (R113) | <0.0050 | 0.0050 | mg/kg | | | | | | | |
| 1,3,5-Trimethylbenzene | <0.0050 | 0.0050 | mg/kg | | | | | | | |
| 1,2,4-Trimethylbenzene | <0.0050 | 0.0050 | mg/kg | | | | | | | |
| Vinyl chloride | <0.0050 | 0.0050 | mg/kg | | | | | | | |
| o-Xylene | <0.0020 | 0.0020 | mg/kg | | | | | | | |
| m,p-Xylenes | <0.0020 | 0.0020 | mg/kg | | | | | | | |
| *Surrogate: 4-Bromofluorobenzene* | *0.107* | | *mg/kg* | *0.10* | | *107* | *70-140* | | | |
| *Surrogate: Dibromofluoromethane* | *0.0945* | | *mg/kg* | *0.10* | | *94.5* | *70-140* | | | |
| *Surrogate: Toluene-d8* | *0.113* | | *mg/kg* | *0.10* | | *113* | *70-140* | | | |
| **LCS (B6E1109-BS1)** | | | | Prepared & Analyzed: 05/11/16 | | | | | | |
| Acetone | **0.116** | 0.050 | mg/kg | 0.10 | | 116 | 70-130 | | | |
| tert-Amyl Methyl Ether (TAME) | **0.0376** | 0.0050 | mg/kg | 0.040 | | 94.0 | 70-130 | | | |

**Viorel Vasile**
Operations Manager

# LABORATORY ANALYSIS RESULTS

**Client:** Stantec (TO)
**Project No:** 2057123300
**Project Name:** Grayson Power Plant Glendale Phase II

**AA Project No:** A732177
**Date Received:** 04/29/16
**Date Reported:** 05/24/16

| Analyte | Result | Reporting Limit | Units | Spike Level | Source Result | %REC | %REC Limits | RPD | RPD Limit | Notes |
|---|---|---|---|---|---|---|---|---|---|---|
| **VOCs, OXY & TPHG by GC/MS EPA 5035 - Quality Control** | | | | | | | | | | |
| *Batch B6E1109 - EPA 5035* | | | | | | | | | | |
| **LCS (B6E1109-BS1) Continued** | | | | Prepared & Analyzed: 05/11/16 | | | | | | |
| Benzene | **0.0452** | 0.0020 | mg/kg | 0.040 | | 113 | 75-125 | | | |
| Bromobenzene | **0.0436** | 0.0050 | mg/kg | 0.040 | | 109 | 70-130 | | | |
| Bromochloromethane | **0.0487** | 0.0050 | mg/kg | 0.040 | | 122 | 70-130 | | | |
| Bromodichloromethane | **0.0412** | 0.0050 | mg/kg | 0.040 | | 103 | 75-125 | | | |
| Bromoform | **0.0411** | 0.0050 | mg/kg | 0.040 | | 103 | 75-125 | | | |
| Bromomethane | **0.0416** | 0.0050 | mg/kg | 0.040 | | 104 | 75-125 | | | |
| 2-Butanone (MEK) | **0.118** | 0.050 | mg/kg | 0.10 | | 118 | 70-130 | | | |
| tert-Butyl alcohol (TBA) | **0.275** | 0.020 | mg/kg | 0.20 | | 137 | 70-130 | | | ** |
| sec-Butylbenzene | **0.0391** | 0.0050 | mg/kg | 0.040 | | 97.8 | 70-130 | | | |
| tert-Butylbenzene | **0.0404** | 0.0050 | mg/kg | 0.040 | | 101 | 70-130 | | | |
| n-Butylbenzene | **0.0381** | 0.0050 | mg/kg | 0.040 | | 95.3 | 70-130 | | | |
| Carbon Disulfide | **0.0960** | 0.0050 | mg/kg | 0.10 | | 96.0 | 70-130 | | | |
| Carbon Tetrachloride | **0.0426** | 0.0050 | mg/kg | 0.040 | | 107 | 75-125 | | | |
| Chlorobenzene | **0.0383** | 0.0050 | mg/kg | 0.040 | | 95.7 | 75-125 | | | |
| Chloroethane | **0.0432** | 0.0050 | mg/kg | 0.040 | | 108 | 75-125 | | | |
| Chloroform | **0.0451** | 0.0050 | mg/kg | 0.040 | | 113 | 75-125 | | | |
| Chloromethane | **0.0377** | 0.0050 | mg/kg | 0.040 | | 94.2 | 65-125 | | | |
| 2-Chlorotoluene | **0.0401** | 0.0050 | mg/kg | 0.040 | | 100 | 70-130 | | | |
| 4-Chlorotoluene | **0.0401** | 0.0050 | mg/kg | 0.040 | | 100 | 70-130 | | | |
| 1,2-Dibromo-3-chloropropane | **0.0528** | 0.010 | mg/kg | 0.040 | | 132 | 70-130 | | | ** |
| Dibromochloromethane | **0.0411** | 0.0050 | mg/kg | 0.040 | | 103 | 75-125 | | | |
| 1,2-Dibromoethane (EDB) | **0.0438** | 0.0050 | mg/kg | 0.040 | | 110 | 70-130 | | | |
| Dibromomethane | **0.0447** | 0.0050 | mg/kg | 0.040 | | 112 | 70-130 | | | |
| 1,4-Dichlorobenzene | **0.0380** | 0.0050 | mg/kg | 0.040 | | 95.0 | 75-125 | | | |
| 1,3-Dichlorobenzene | **0.0389** | 0.0050 | mg/kg | 0.040 | | 97.2 | 70-130 | | | |
| 1,2-Dichlorobenzene | **0.0386** | 0.0050 | mg/kg | 0.040 | | 96.6 | 70-130 | | | |
| Dichlorodifluoromethane (R12) | **0.0362** | 0.0050 | mg/kg | 0.040 | | 90.4 | 70-130 | | | |
| 1,1-Dichloroethane | **0.0436** | 0.0050 | mg/kg | 0.040 | | 109 | 70-125 | | | |
| 1,2-Dichloroethane (EDC) | **0.0424** | 0.0050 | mg/kg | 0.040 | | 106 | 75-125 | | | |
| trans-1,2-Dichloroethylene | **0.0481** | 0.0050 | mg/kg | 0.040 | | 120 | 75-125 | | | |
| cis-1,2-Dichloroethylene | **0.0432** | 0.0050 | mg/kg | 0.040 | | 108 | 75-125 | | | |

**Viorel Vasile**
Operations Manager

# LABORATORY ANALYSIS RESULTS

**Client:** Stantec (TO)
**Project No:** 2057123300
**Project Name:** Grayson Power Plant Glendale Phase II

**AA Project No:** A732177
**Date Received:** 04/29/16
**Date Reported:** 05/24/16

## VOCs, OXY & TPHG by GC/MS EPA 5035 - Quality Control

*Batch B6E1109 - EPA 5035*

**LCS (B6E1109-BS1) Continued** — Prepared & Analyzed: 05/11/16

| Analyte | Result | Reporting Limit | Units | Spike Level | Source Result | %REC | %REC Limits | RPD | RPD Limit | Notes |
|---|---|---|---|---|---|---|---|---|---|---|
| 1,1-Dichloroethylene | **0.0644** | 0.0050 | mg/kg | 0.040 | | 161 | 70-130 | | | ** |
| 2,2-Dichloropropane | **0.0440** | 0.0050 | mg/kg | 0.040 | | 110 | 70-130 | | | |
| 1,3-Dichloropropane | **0.0430** | 0.0050 | mg/kg | 0.040 | | 108 | 70-130 | | | |
| 1,2-Dichloropropane | **0.0449** | 0.0050 | mg/kg | 0.040 | | 112 | 75-130 | | | |
| trans-1,3-Dichloropropylene | **0.0376** | 0.0050 | mg/kg | 0.040 | | 94.0 | 70-130 | | | |
| 1,1-Dichloropropylene | **0.0427** | 0.0050 | mg/kg | 0.040 | | 107 | 70-130 | | | |
| cis-1,3-Dichloropropylene | **0.0418** | 0.0050 | mg/kg | 0.040 | | 104 | 75-125 | | | |
| Diisopropyl ether (DIPE) | **0.0378** | 0.0050 | mg/kg | 0.040 | | 94.5 | 70-130 | | | |
| Ethylbenzene | **0.0368** | 0.0020 | mg/kg | 0.040 | | 92.0 | 75-125 | | | |
| Ethyl-tert-Butyl Ether (ETBE) | **0.0376** | 0.0050 | mg/kg | 0.040 | | 94.1 | 70-130 | | | |
| Gasoline Range Organics (GRO) | **0.858** | 0.50 | mg/kg | 1.0 | | 85.8 | 70-130 | | | |
| Hexachlorobutadiene | **0.0397** | 0.010 | mg/kg | 0.040 | | 99.2 | 70-130 | | | |
| 2-Hexanone (MBK) | **0.0982** | 0.050 | mg/kg | 0.10 | | 98.2 | 70-130 | | | |
| Isopropylbenzene | **0.0433** | 0.0050 | mg/kg | 0.040 | | 108 | 70-130 | | | |
| 4-Isopropyltoluene | **0.0369** | 0.0050 | mg/kg | 0.040 | | 92.2 | 70-130 | | | |
| Methyl-tert-Butyl Ether (MTBE) | **0.0600** | 0.0050 | mg/kg | 0.080 | | 75.0 | 75-125 | | | |
| Methylene Chloride | **0.0467** | 0.050 | mg/kg | 0.040 | | 117 | 75-130 | | | |
| 4-Methyl-2-pentanone (MIBK) | **0.101** | 0.050 | mg/kg | 0.10 | | 101 | 70-130 | | | |
| Naphthalene | **0.0397** | 0.010 | mg/kg | 0.040 | | 99.2 | 70-130 | | | |
| n-Propylbenzene | **0.0398** | 0.0050 | mg/kg | 0.040 | | 99.5 | 70-130 | | | |
| Styrene | **0.0388** | 0.0050 | mg/kg | 0.040 | | 97.1 | 70-130 | | | |
| 1,1,1,2-Tetrachloroethane | **0.0403** | 0.0050 | mg/kg | 0.040 | | 101 | 70-130 | | | |
| 1,1,2,2-Tetrachloroethane | **0.0401** | 0.0050 | mg/kg | 0.040 | | 100 | 70-135 | | | |
| Tetrachloroethylene (PCE) | **0.0390** | 0.0050 | mg/kg | 0.040 | | 97.6 | 75-125 | | | |
| Toluene | **0.0443** | 0.0020 | mg/kg | 0.040 | | 111 | 75-125 | | | |
| 1,2,4-Trichlorobenzene | **0.0399** | 0.0050 | mg/kg | 0.040 | | 99.8 | 70-130 | | | |
| 1,2,3-Trichlorobenzene | **0.0401** | 0.0050 | mg/kg | 0.040 | | 100 | 70-130 | | | |
| 1,1,2-Trichloroethane | **0.0433** | 0.0050 | mg/kg | 0.040 | | 108 | 75-125 | | | |
| 1,1,1-Trichloroethane | **0.0473** | 0.0050 | mg/kg | 0.040 | | 118 | 75-125 | | | |
| Trichloroethylene (TCE) | **0.0443** | 0.0050 | mg/kg | 0.040 | | 111 | 75-125 | | | |
| Trichlorofluoromethane (R11) | **0.0460** | 0.0050 | mg/kg | 0.040 | | 115 | 70-130 | | | |

**Viorel Vasile**
Operations Manager

# LABORATORY ANALYSIS RESULTS

**Client:** Stantec (TO)
**Project No:** 2057123300
**Project Name:** Grayson Power Plant Glendale Phase II

**AA Project No:** A732177
**Date Received:** 04/29/16
**Date Reported:** 05/24/16

| Analyte | Result | Reporting Limit | Units | Spike Level | Source Result | %REC | %REC Limits | RPD | RPD Limit | Notes |
|---|---|---|---|---|---|---|---|---|---|---|
| **VOCs, OXY & TPHG by GC/MS EPA 5035 - Quality Control** | | | | | | | | | | |
| *Batch B6E1109 - EPA 5035* | | | | | | | | | | |
| **LCS (B6E1109-BS1) Continued** | | | | Prepared & Analyzed: 05/11/16 | | | | | | |
| 1,2,3-Trichloropropane | **0.0499** | 0.0050 | mg/kg | 0.040 | | 125 | 70-130 | | | |
| 1,1,2-Trichloro-1,2,2-trifluoroethane (R113) | **0.0640** | 0.0050 | mg/kg | 0.080 | | 80.0 | 70-130 | | | |
| 1,3,5-Trimethylbenzene | **0.0357** | 0.0050 | mg/kg | 0.040 | | 89.2 | 70-130 | | | |
| 1,2,4-Trimethylbenzene | **0.0394** | 0.0050 | mg/kg | 0.040 | | 98.6 | 70-130 | | | |
| Vinyl chloride | **0.0458** | 0.0050 | mg/kg | 0.040 | | 114 | 75-125 | | | |
| o-Xylene | **0.0367** | 0.0020 | mg/kg | 0.040 | | 91.6 | 75-125 | | | |
| m,p-Xylenes | **0.0804** | 0.0020 | mg/kg | 0.080 | | 101 | 70-130 | | | |
| *Surrogate: 4-Bromofluorobenzene* | *0.108* | | *mg/kg* | *0.10* | | *108* | *70-140* | | | |
| *Surrogate: Dibromofluoromethane* | *0.103* | | *mg/kg* | *0.10* | | *103* | *70-140* | | | |
| *Surrogate: Toluene-d8* | *0.0986* | | *mg/kg* | *0.10* | | *98.6* | *70-140* | | | |
| **LCS Dup (B6E1109-BSD1)** | | | | Prepared & Analyzed: 05/11/16 | | | | | | |
| Acetone | **0.0908** | 0.050 | mg/kg | 0.10 | | 90.8 | 70-130 | 24.0 | 30 | |
| tert-Amyl Methyl Ether (TAME) | **0.0328** | 0.0050 | mg/kg | 0.040 | | 82.0 | 70-130 | 13.6 | 30 | |
| Benzene | **0.0414** | 0.0020 | mg/kg | 0.040 | | 104 | 75-125 | 8.77 | 30 | |
| Bromobenzene | **0.0419** | 0.0050 | mg/kg | 0.040 | | 105 | 70-130 | 4.03 | 30 | |
| Bromochloromethane | **0.0427** | 0.0050 | mg/kg | 0.040 | | 107 | 70-130 | 13.0 | 30 | |
| Bromodichloromethane | **0.0347** | 0.0050 | mg/kg | 0.040 | | 86.7 | 75-125 | 17.3 | 30 | |
| Bromoform | **0.0366** | 0.0050 | mg/kg | 0.040 | | 91.6 | 75-125 | 11.5 | 30 | |
| Bromomethane | **0.0345** | 0.0050 | mg/kg | 0.040 | | 86.2 | 75-125 | 18.7 | 30 | |
| 2-Butanone (MEK) | **0.0926** | 0.050 | mg/kg | 0.10 | | 92.6 | 70-130 | 24.2 | 30 | |
| tert-Butyl alcohol (TBA) | **0.233** | 0.020 | mg/kg | 0.20 | | 116 | 70-130 | 16.6 | 30 | |
| sec-Butylbenzene | **0.0477** | 0.0050 | mg/kg | 0.040 | | 119 | 70-130 | 19.7 | 30 | |
| tert-Butylbenzene | **0.0475** | 0.0050 | mg/kg | 0.040 | | 119 | 70-130 | 16.2 | 30 | |
| n-Butylbenzene | **0.0461** | 0.0050 | mg/kg | 0.040 | | 115 | 70-130 | 19.0 | 30 | |
| Carbon Disulfide | **0.0956** | 0.0050 | mg/kg | 0.10 | | 95.6 | 70-130 | 0.418 | 30 | |
| Carbon Tetrachloride | **0.0455** | 0.0050 | mg/kg | 0.040 | | 114 | 75-125 | 6.49 | 30 | |
| Chlorobenzene | **0.0396** | 0.0050 | mg/kg | 0.040 | | 99.0 | 75-125 | 3.39 | 30 | |
| Chloroethane | **0.0410** | 0.0050 | mg/kg | 0.040 | | 102 | 75-125 | 5.32 | 30 | |
| Chloroform | **0.0415** | 0.0050 | mg/kg | 0.040 | | 104 | 75-125 | 8.23 | 30 | |
| Chloromethane | **0.0344** | 0.0050 | mg/kg | 0.040 | | 86.0 | 65-125 | 9.21 | 30 | |

**Viorel Vasile**
Operations Manager

# LABORATORY ANALYSIS RESULTS

**Client:** Stantec (TO)
**Project No:** 2057123300
**Project Name:** Grayson Power Plant Glendale Phase II

**AA Project No:** A732177
**Date Received:** 04/29/16
**Date Reported:** 05/24/16

| Analyte | Result | Reporting Limit | Units | Spike Level | Source Result | %REC | %REC Limits | RPD | RPD Limit | Notes |
|---|---|---|---|---|---|---|---|---|---|---|
| **VOCs, OXY & TPHG by GC/MS EPA 5035 - Quality Control** | | | | | | | | | | |
| *Batch B6E1109 - EPA 5035* | | | | | | | | | | |
| **LCS Dup (B6E1109-BSD1) Continued** | | | | Prepared & Analyzed: 05/11/16 | | | | | | |
| 2-Chlorotoluene | **0.0446** | 0.0050 | mg/kg | 0.040 | | 112 | 70-130 | 10.6 | 30 | |
| 4-Chlorotoluene | **0.0419** | 0.0050 | mg/kg | 0.040 | | 105 | 70-130 | 4.44 | 30 | |
| 1,2-Dibromo-3-chloropropane | **0.0436** | 0.010 | mg/kg | 0.040 | | 109 | 70-130 | 19.0 | 30 | |
| Dibromochloromethane | **0.0377** | 0.0050 | mg/kg | 0.040 | | 94.4 | 75-125 | 8.48 | 30 | |
| 1,2-Dibromoethane (EDB) | **0.0394** | 0.0050 | mg/kg | 0.040 | | 98.6 | 70-130 | 10.5 | 30 | |
| Dibromomethane | **0.0354** | 0.0050 | mg/kg | 0.040 | | 88.5 | 70-130 | 23.2 | 30 | |
| 1,4-Dichlorobenzene | **0.0396** | 0.0050 | mg/kg | 0.040 | | 99.1 | 75-125 | 4.17 | 30 | |
| 1,3-Dichlorobenzene | **0.0412** | 0.0050 | mg/kg | 0.040 | | 103 | 70-130 | 5.70 | 30 | |
| 1,2-Dichlorobenzene | **0.0402** | 0.0050 | mg/kg | 0.040 | | 100 | 70-130 | 3.86 | 30 | |
| Dichlorodifluoromethane (R12) | **0.0341** | 0.0050 | mg/kg | 0.040 | | 85.3 | 70-130 | 5.86 | 30 | |
| 1,1-Dichloroethane | **0.0406** | 0.0050 | mg/kg | 0.040 | | 102 | 70-125 | 7.13 | 30 | |
| 1,2-Dichloroethane (EDC) | **0.0335** | 0.0050 | mg/kg | 0.040 | | 83.6 | 75-125 | 23.5 | 30 | |
| trans-1,2-Dichloroethylene | **0.0463** | 0.0050 | mg/kg | 0.040 | | 116 | 75-125 | 3.69 | 30 | |
| cis-1,2-Dichloroethylene | **0.0399** | 0.0050 | mg/kg | 0.040 | | 99.8 | 75-125 | 7.98 | 30 | |
| 1,1-Dichloroethylene | **0.0657** | 0.0050 | mg/kg | 0.040 | | 164 | 70-130 | 2.03 | 30 | ** |
| 2,2-Dichloropropane | **0.0416** | 0.0050 | mg/kg | 0.040 | | 104 | 70-130 | 5.47 | 30 | |
| 1,3-Dichloropropane | **0.0381** | 0.0050 | mg/kg | 0.040 | | 95.3 | 70-130 | 12.1 | 30 | |
| 1,2-Dichloropropane | **0.0384** | 0.0050 | mg/kg | 0.040 | | 95.9 | 75-130 | 15.6 | 30 | |
| trans-1,3-Dichloropropylene | **0.0325** | 0.0050 | mg/kg | 0.040 | | 81.2 | 70-130 | 14.6 | 30 | |
| 1,1-Dichloropropylene | **0.0416** | 0.0050 | mg/kg | 0.040 | | 104 | 70-130 | 2.66 | 30 | |
| cis-1,3-Dichloropropylene | **0.0329** | 0.0050 | mg/kg | 0.040 | | 82.3 | 75-125 | 23.7 | 30 | |
| Diisopropyl ether (DIPE) | **0.0306** | 0.0050 | mg/kg | 0.040 | | 76.6 | 70-130 | 20.9 | 30 | |
| Ethylbenzene | **0.0445** | 0.0020 | mg/kg | 0.040 | | 111 | 75-125 | 19.0 | 30 | |
| Ethyl-tert-Butyl Ether (ETBE) | **0.0319** | 0.0050 | mg/kg | 0.040 | | 79.8 | 70-130 | 16.4 | 30 | |
| Gasoline Range Organics (GRO) | **1.03** | 0.50 | mg/kg | 1.0 | | 103 | 70-130 | 18.0 | 30 | |
| Hexachlorobutadiene | **0.0505** | 0.010 | mg/kg | 0.040 | | 126 | 70-130 | 24.1 | 30 | |
| 2-Hexanone (MBK) | **0.103** | 0.050 | mg/kg | 0.10 | | 103 | 70-130 | 5.24 | 30 | |
| Isopropylbenzene | **0.0470** | 0.0050 | mg/kg | 0.040 | | 117 | 70-130 | 8.20 | 30 | |
| 4-Isopropyltoluene | **0.0456** | 0.0050 | mg/kg | 0.040 | | 114 | 70-130 | 21.2 | 30 | |
| Methyl-tert-Butyl Ether (MTBE) | **0.0463** | 0.0050 | mg/kg | 0.080 | | 57.8 | 75-125 | 25.9 | 30 | *** |
| Methylene Chloride | **0.0379** | 0.050 | mg/kg | 0.040 | | 94.6 | 75-130 | 20.8 | 30 | |

**Viorel Vasile**
Operations Manager

# LABORATORY ANALYSIS RESULTS

**Client:** Stantec (TO)
**Project No:** 2057123300
**Project Name:** Grayson Power Plant Glendale Phase II

**AA Project No:** A732177
**Date Received:** 04/29/16
**Date Reported:** 05/24/16

| Analyte | Result | Reporting Limit | Units | Spike Level | Source Result | %REC | %REC Limits | RPD | RPD Limit | Notes |
|---|---|---|---|---|---|---|---|---|---|---|
| **VOCs, OXY & TPHG by GC/MS EPA 5035 - Quality Control** | | | | | | | | | | |
| *Batch B6E1109 - EPA 5035* | | | | | | | | | | |
| **LCS Dup (B6E1109-BSD1) Continued** | | | | Prepared & Analyzed: 05/11/16 | | | | | | |
| 4-Methyl-2-pentanone (MIBK) | **0.0922** | 0.050 | mg/kg | 0.10 | | 92.2 | 70-130 | 9.44 | 30 | |
| Naphthalene | **0.0362** | 0.010 | mg/kg | 0.040 | | 90.6 | 70-130 | 9.07 | 30 | |
| n-Propylbenzene | **0.0459** | 0.0050 | mg/kg | 0.040 | | 115 | 70-130 | 14.1 | 30 | |
| Styrene | **0.0433** | 0.0050 | mg/kg | 0.040 | | 108 | 70-130 | 10.9 | 30 | |
| 1,1,1,2-Tetrachloroethane | **0.0415** | 0.0050 | mg/kg | 0.040 | | 104 | 70-130 | 2.88 | 30 | |
| 1,1,2,2-Tetrachloroethane | **0.0391** | 0.0050 | mg/kg | 0.040 | | 97.8 | 70-135 | 2.42 | 30 | |
| Tetrachloroethylene (PCE) | **0.0481** | 0.0050 | mg/kg | 0.040 | | 120 | 75-125 | 20.8 | 30 | |
| Toluene | **0.0476** | 0.0020 | mg/kg | 0.040 | | 119 | 75-125 | 7.05 | 30 | |
| 1,2,4-Trichlorobenzene | **0.0386** | 0.0050 | mg/kg | 0.040 | | 96.6 | 70-130 | 3.26 | 30 | |
| 1,2,3-Trichlorobenzene | **0.0405** | 0.0050 | mg/kg | 0.040 | | 101 | 70-130 | 1.14 | 30 | |
| 1,1,2-Trichloroethane | **0.0398** | 0.0050 | mg/kg | 0.040 | | 99.6 | 75-125 | 8.42 | 30 | |
| 1,1,1-Trichloroethane | **0.0459** | 0.0050 | mg/kg | 0.040 | | 115 | 75-125 | 3.13 | 30 | |
| Trichloroethylene (TCE) | **0.0422** | 0.0050 | mg/kg | 0.040 | | 105 | 75-125 | 4.91 | 30 | |
| Trichlorofluoromethane (R11) | **0.0442** | 0.0050 | mg/kg | 0.040 | | 111 | 70-130 | 3.86 | 30 | |
| 1,2,3-Trichloropropane | **0.0511** | 0.0050 | mg/kg | 0.040 | | 128 | 70-130 | 2.49 | 30 | |
| 1,1,2-Trichloro-1,2,2-trifluoroethane (R113) | **0.0660** | 0.0050 | mg/kg | 0.080 | | 82.5 | 70-130 | 3.08 | 30 | |
| 1,3,5-Trimethylbenzene | **0.0425** | 0.0050 | mg/kg | 0.040 | | 106 | 70-130 | 17.4 | 30 | |
| 1,2,4-Trimethylbenzene | **0.0444** | 0.0050 | mg/kg | 0.040 | | 111 | 70-130 | 11.7 | 30 | |
| Vinyl chloride | **0.0425** | 0.0050 | mg/kg | 0.040 | | 106 | 75-125 | 7.52 | 30 | |
| o-Xylene | **0.0423** | 0.0020 | mg/kg | 0.040 | | 106 | 75-125 | 14.4 | 30 | |
| m,p-Xylenes | **0.0932** | 0.0020 | mg/kg | 0.080 | | 117 | 70-130 | 14.7 | 30 | |
| *Surrogate: 4-Bromofluorobenzene* | *0.0993* | | *mg/kg* | *0.10* | | *99.3* | *70-140* | | | |
| *Surrogate: Dibromofluoromethane* | *0.0879* | | *mg/kg* | *0.10* | | *87.9* | *70-140* | | | |
| *Surrogate: Toluene-d8* | *0.106* | | *mg/kg* | *0.10* | | *106* | *70-140* | | | |
| **Carbon Chain by GC/FID - Quality Control** | | | | | | | | | | |
| *Batch B6E0431 - EPA 3550B* | | | | | | | | | | |
| **Blank (B6E0431-BLK1)** | | | | Prepared & Analyzed: 05/04/16 | | | | | | |
| C6-C8 | <1.0 | 1.0 | mg/kg | | | | | | | |
| C8-C10 | <1.0 | 1.0 | mg/kg | | | | | | | |
| C10-C12 | <1.0 | 1.0 | mg/kg | | | | | | | |

**Viorel Vasile**
Operations Manager

# LABORATORY ANALYSIS RESULTS

**Client:** Stantec (TO)
**Project No:** 2057123300
**Project Name:** Grayson Power Plant Glendale Phase II

**AA Project No:** A732177
**Date Received:** 04/29/16
**Date Reported:** 05/24/16

| Analyte | Result | Reporting Limit | Units | Spike Level | Source Result | %REC | %REC Limits | RPD | RPD Limit | Notes |
|---|---|---|---|---|---|---|---|---|---|---|
| **Carbon Chain by GC/FID - Quality Control** | | | | | | | | | | |
| *Batch B6E0431 - EPA 3550B* | | | | | | | | | | |
| **Blank (B6E0431-BLK1) Continued** | | | | Prepared & Analyzed: 05/04/16 | | | | | | |
| C12-C14 | <1.0 | 1.0 | mg/kg | | | | | | | |
| C14-C16 | <1.0 | 1.0 | mg/kg | | | | | | | |
| C16-C18 | <1.0 | 1.0 | mg/kg | | | | | | | |
| C18-C20 | <1.0 | 1.0 | mg/kg | | | | | | | |
| C20-C22 | <1.0 | 1.0 | mg/kg | | | | | | | |
| C22-C24 | <1.0 | 1.0 | mg/kg | | | | | | | |
| C24-C26 | <1.0 | 1.0 | mg/kg | | | | | | | |
| C26-C28 | <1.0 | 1.0 | mg/kg | | | | | | | |
| C28-C32 | <1.0 | 1.0 | mg/kg | | | | | | | |
| C32-C34 | <1.0 | 1.0 | mg/kg | | | | | | | |
| C34-C36 | <1.0 | 1.0 | mg/kg | | | | | | | |
| C36-C40 | <1.0 | 1.0 | mg/kg | | | | | | | |
| C40-C44 | <1.0 | 1.0 | mg/kg | | | | | | | |
| TPH (C6-C44) | <10 | 10 | mg/kg | | | | | | | |
| *Surrogate: o-Terphenyl* | *9.11* | | *mg/kg* | *10* | | *91.1* | *50-150* | | | |
| **LCS (B6E0431-BS1)** | | | | Prepared & Analyzed: 05/04/16 | | | | | | |
| Diesel Range Organics as Diesel | **198** | 10 | mg/kg | 200 | | 99.0 | 75-125 | | | |
| *Surrogate: o-Terphenyl* | *10.8* | | *mg/kg* | *10* | | *108* | *50-150* | | | |
| **LCS Dup (B6E0431-BSD1)** | | | | Prepared & Analyzed: 05/04/16 | | | | | | |
| Diesel Range Organics as Diesel | **210** | 10 | mg/kg | 200 | | 105 | 75-125 | 5.83 | 40 | |
| *Surrogate: o-Terphenyl* | *11.0* | | *mg/kg* | *10* | | *110* | *50-150* | | | |
| **Matrix Spike (B6E0431-MS1)** | | | **Source: 6D29007-07** | Prepared: 05/04/16 Analyzed: 05/05/16 | | | | | | |
| Diesel Range Organics as Diesel | **182** | 10 | mg/kg | 200 | | 90.8 | 70-130 | | | |
| *Surrogate: o-Terphenyl* | *11.2* | | *mg/kg* | *10* | | *112* | *50-150* | | | |
| **Matrix Spike Dup (B6E0431-MSD1)** | | | **Source: 6D29007-07** | Prepared: 05/04/16 Analyzed: 05/05/16 | | | | | | |
| Diesel Range Organics as Diesel | **179** | 10 | mg/kg | 200 | | 89.6 | 70-130 | 1.39 | 40 | |
| *Surrogate: o-Terphenyl* | *13.9* | | *mg/kg* | *10* | | *139* | *50-150* | | | |
| **Total Metals CAM 17 - Quality Control** | | | | | | | | | | |
| *Batch B6E0220 - EPA 3050B* | | | | | | | | | | |

**Viorel Vasile**
Operations Manager

# LABORATORY ANALYSIS RESULTS

**Client:** Stantec (TO)
**Project No:** 2057123300
**Project Name:** Grayson Power Plant Glendale Phase II

**AA Project No:** A732177
**Date Received:** 04/29/16
**Date Reported:** 05/24/16

| Analyte | Result | Reporting Limit | Units | Spike Level | Source Result | %REC | %REC Limits | RPD | RPD Limit | Notes |
|---|---|---|---|---|---|---|---|---|---|---|
| **Total Metals CAM 17 - Quality Control** | | | | | | | | | | |
| *Batch B6E0220 - EPA 3050B* | | | | | | | | | | |
| **Blank (B6E0220-BLK1)** | | | | Prepared: 05/02/16 Analyzed: 05/03/16 | | | | | | |
| Antimony | <10 | 10 | mg/kg | | | | | | | |
| Arsenic | <0.50 | 0.50 | mg/kg | | | | | | | |
| Barium | <10 | 10 | mg/kg | | | | | | | |
| Beryllium | <1.0 | 1.0 | mg/kg | | | | | | | |
| Cadmium | <1.0 | 1.0 | mg/kg | | | | | | | |
| Chromium | <3.0 | 3.0 | mg/kg | | | | | | | |
| Cobalt | <3.0 | 3.0 | mg/kg | | | | | | | |
| Copper | <3.0 | 3.0 | mg/kg | | | | | | | |
| Lead | <3.0 | 3.0 | mg/kg | | | | | | | |
| Molybdenum | <5.0 | 5.0 | mg/kg | | | | | | | |
| Nickel | <3.0 | 3.0 | mg/kg | | | | | | | |
| Selenium | <0.50 | 0.50 | mg/kg | | | | | | | |
| Silver | <1.0 | 1.0 | mg/kg | | | | | | | |
| Thallium | <5.0 | 5.0 | mg/kg | | | | | | | |
| Vanadium | <10 | 10 | mg/kg | | | | | | | |
| Zinc | <3.0 | 3.0 | mg/kg | | | | | | | |
| **LCS (B6E0220-BS1)** | | | | Prepared: 05/02/16 Analyzed: 05/03/16 | | | | | | |
| Antimony | **48.9** | 10 | mg/kg | 50 | | 97.9 | 80-120 | | | |
| Arsenic | **48.8** | 0.50 | mg/kg | 50 | | 97.6 | 80-120 | | | |
| Barium | **52.1** | 10 | mg/kg | 50 | | 104 | 80-120 | | | |
| Beryllium | **50.6** | 1.0 | mg/kg | 50 | | 101 | 80-120 | | | |
| Cadmium | **50.9** | 1.0 | mg/kg | 50 | | 102 | 80-120 | | | |
| Chromium | **50.6** | 3.0 | mg/kg | 50 | | 101 | 80-120 | | | |
| Cobalt | **50.8** | 3.0 | mg/kg | 50 | | 102 | 80-120 | | | |
| Copper | **50.6** | 3.0 | mg/kg | 50 | | 101 | 80-120 | | | |
| Lead | **50.2** | 3.0 | mg/kg | 50 | | 100 | 80-120 | | | |
| Molybdenum | **50.2** | 5.0 | mg/kg | 50 | | 100 | 80-120 | | | |
| Nickel | **51.0** | 3.0 | mg/kg | 50 | | 102 | 80-120 | | | |
| Selenium | **51.4** | 0.50 | mg/kg | 50 | | 103 | 80-120 | | | |
| Silver | **50.6** | 1.0 | mg/kg | 50 | | 101 | 80-120 | | | |
| Thallium | **47.0** | 5.0 | mg/kg | 50 | | 94.0 | 80-120 | | | |

**Viorel Vasile**
Operations Manager

# LABORATORY ANALYSIS RESULTS

**Client:** Stantec (TO)
**Project No:** 2057123300
**Project Name:** Grayson Power Plant Glendale Phase II

**AA Project No:** A732177
**Date Received:** 04/29/16
**Date Reported:** 05/24/16

| Analyte | Result | Reporting Limit | Units | Spike Level | Source Result | %REC | %REC Limits | RPD | RPD Limit | Notes |
|---|---|---|---|---|---|---|---|---|---|---|
| **Total Metals CAM 17 - Quality Control** | | | | | | | | | | |
| *Batch B6E0220 - EPA 3050B* | | | | | | | | | | |
| **LCS (B6E0220-BS1) Continued** | | | | Prepared: 05/02/16 | | Analyzed: 05/03/16 | | | | |
| Vanadium | **50.0** | 10 | mg/kg | 50 | | 100 | 80-120 | | | |
| Zinc | **51.3** | 3.0 | mg/kg | 50 | | 103 | 80-120 | | | |
| **LCS Dup (B6E0220-BSD1)** | | | | Prepared: 05/02/16 | | Analyzed: 05/03/16 | | | | |
| Antimony | **49.5** | 10 | mg/kg | 50 | | 99.1 | 80-120 | 1.24 | 20 | |
| Arsenic | **49.7** | 0.50 | mg/kg | 50 | | 99.4 | 80-120 | 1.83 | 20 | |
| Barium | **51.8** | 10 | mg/kg | 50 | | 104 | 80-120 | 0.674 | 20 | |
| Beryllium | **50.7** | 1.0 | mg/kg | 50 | | 101 | 80-120 | 0.296 | 20 | |
| Cadmium | **50.8** | 1.0 | mg/kg | 50 | | 102 | 80-120 | 0.197 | 20 | |
| Chromium | **50.6** | 3.0 | mg/kg | 50 | | 101 | 80-120 | 0.00 | 20 | |
| Cobalt | **50.6** | 3.0 | mg/kg | 50 | | 101 | 80-120 | 0.493 | 20 | |
| Copper | **50.8** | 3.0 | mg/kg | 50 | | 102 | 80-120 | 0.197 | 20 | |
| Lead | **51.1** | 3.0 | mg/kg | 50 | | 102 | 80-120 | 1.88 | 20 | |
| Molybdenum | **50.4** | 5.0 | mg/kg | 50 | | 101 | 80-120 | 0.497 | 20 | |
| Nickel | **50.5** | 3.0 | mg/kg | 50 | | 101 | 80-120 | 0.887 | 20 | |
| Selenium | **51.2** | 0.50 | mg/kg | 50 | | 102 | 80-120 | 0.390 | 20 | |
| Silver | **50.2** | 1.0 | mg/kg | 50 | | 100 | 80-120 | 0.793 | 20 | |
| Thallium | **49.0** | 5.0 | mg/kg | 50 | | 97.9 | 80-120 | 4.08 | 20 | |
| Vanadium | **49.7** | 10 | mg/kg | 50 | | 99.5 | 80-120 | 0.541 | 20 | |
| Zinc | **51.2** | 3.0 | mg/kg | 50 | | 102 | 80-120 | 0.0975 | 20 | |
| **Duplicate (B6E0220-DUP1)** | | **Source: 6D27022-13** | | Prepared: 05/02/16 | | Analyzed: 05/03/16 | | | | |
| Antimony | **<10** | 10 | mg/kg | | | | | | 40 | |
| Arsenic | **2.80** | 0.50 | mg/kg | | 2.50 | | | 11.1 | 40 | |
| Barium | **117** | 10 | mg/kg | | 137 | | | 15.9 | 40 | |
| Beryllium | **<1.0** | 1.0 | mg/kg | | | | | | 40 | |
| Cadmium | **<1.0** | 1.0 | mg/kg | | | | | | 40 | |
| Chromium | **28.1** | 3.0 | mg/kg | | 29.9 | | | 6.08 | 40 | |
| Cobalt | **8.59** | 3.0 | mg/kg | | 10.7 | | | 21.6 | 40 | |
| Copper | **24.7** | 3.0 | mg/kg | | 28.9 | | | 15.5 | 40 | |
| Lead | **32.2** | 3.0 | mg/kg | | 49.0 | | | 41.5 | 40 | |
| Molybdenum | **<5.0** | 5.0 | mg/kg | | | | | | 40 | |
| Nickel | **11.3** | 3.0 | mg/kg | | 12.8 | | | 12.7 | 40 | |

**Viorel Vasile**
Operations Manager

# LABORATORY ANALYSIS RESULTS

**Client:** Stantec (TO)
**Project No:** 2057123300
**Project Name:** Grayson Power Plant Glendale Phase II

**AA Project No:** A732177
**Date Received:** 04/29/16
**Date Reported:** 05/24/16

| Analyte | Result | Reporting Limit | Units | Spike Level | Source Result | %REC | %REC Limits | RPD | RPD Limit | Notes |
|---|---|---|---|---|---|---|---|---|---|---|
| **Total Metals CAM 17 - Quality Control** | | | | | | | | | | |
| *Batch B6E0220 - EPA 3050B* | | | | | | | | | | |
| **Duplicate (B6E0220-DUP1) Continued** | | **Source: 6D27022-13** | Prepared: 05/02/16 | Analyzed: 05/03/16 | | | | | | |
| Selenium | **<0.50** | 0.50 | mg/kg | | | | | | 40 | |
| Silver | **<1.0** | 1.0 | mg/kg | | | | | | 40 | |
| Thallium | **<5.0** | 5.0 | mg/kg | | | | | | 40 | |
| Vanadium | **43.3** | 10 | mg/kg | | 52.6 | | | 19.3 | 40 | |
| Zinc | **124** | 3.0 | mg/kg | | 167 | | | 29.2 | 40 | |
| **Matrix Spike (B6E0220-MS1)** | | **Source: 6D29007-01** | Prepared: 05/02/16 | Analyzed: 05/03/16 | | | | | | |
| Antimony | **15.0** | 10 | mg/kg | 50 | <10 | 30.0 | 75-125 | | | QM-07 |
| Arsenic | **50.8** | 0.50 | mg/kg | 50 | 3.65 | 94.3 | 75-125 | | | |
| Barium | **183** | 10 | mg/kg | 50 | 144 | 78.8 | 75-125 | | | |
| Beryllium | **49.5** | 1.0 | mg/kg | 50 | <1.0 | 99.0 | 75-125 | | | |
| Cadmium | **49.4** | 1.0 | mg/kg | 50 | <1.0 | 98.8 | 75-125 | | | |
| Chromium | **62.9** | 3.0 | mg/kg | 50 | 16.4 | 93.1 | 75-125 | | | |
| Cobalt | **59.6** | 3.0 | mg/kg | 50 | 12.6 | 93.9 | 75-125 | | | |
| Copper | **62.6** | 3.0 | mg/kg | 50 | 18.5 | 88.2 | 75-125 | | | |
| Lead | **55.7** | 3.0 | mg/kg | 50 | 7.10 | 97.2 | 75-125 | | | |
| Molybdenum | **47.8** | 5.0 | mg/kg | 50 | <5.0 | 95.5 | 75-125 | | | |
| Nickel | **57.8** | 3.0 | mg/kg | 50 | 11.6 | 92.4 | 75-125 | | | |
| Selenium | **46.7** | 0.50 | mg/kg | 50 | <0.50 | 93.5 | 75-125 | | | |
| Silver | **47.0** | 1.0 | mg/kg | 50 | <1.0 | 94.1 | 75-125 | | | |
| Thallium | **37.9** | 5.0 | mg/kg | 50 | <5.0 | 75.8 | 60-140 | | | |
| Vanadium | **99.5** | 10 | mg/kg | 50 | 58.4 | 82.3 | 75-125 | | | |
| Zinc | **130** | 3.0 | mg/kg | 50 | 90.6 | 79.2 | 75-125 | | | |
| **Matrix Spike Dup (B6E0220-MSD1)** | | **Source: 6D29007-01** | Prepared: 05/02/16 | Analyzed: 05/03/16 | | | | | | |
| Antimony | **14.9** | 10 | mg/kg | 50 | <10 | 29.7 | 75-125 | 0.871 | 40 | QM-07 |
| Arsenic | **52.0** | 0.50 | mg/kg | 50 | 3.65 | 96.8 | 75-125 | 2.43 | 40 | |
| Barium | **184** | 10 | mg/kg | 50 | 144 | 80.3 | 75-125 | 0.409 | 40 | |
| Beryllium | **50.0** | 1.0 | mg/kg | 50 | <1.0 | 100 | 75-125 | 1.16 | 40 | |
| Cadmium | **49.8** | 1.0 | mg/kg | 50 | <1.0 | 99.5 | 75-125 | 0.696 | 40 | |
| Chromium | **63.9** | 3.0 | mg/kg | 50 | 16.4 | 95.1 | 75-125 | 1.58 | 40 | |
| Cobalt | **60.4** | 3.0 | mg/kg | 50 | 12.6 | 95.5 | 75-125 | 1.33 | 40 | |
| Copper | **63.8** | 3.0 | mg/kg | 50 | 18.5 | 90.8 | 75-125 | 2.06 | 40 | |

**Viorel Vasile**
Operations Manager

# LABORATORY ANALYSIS RESULTS

**Client:** Stantec (TO)
**Project No:** 2057123300
**Project Name:** Grayson Power Plant Glendale Phase II

**AA Project No:** A732177
**Date Received:** 04/29/16
**Date Reported:** 05/24/16

| Analyte | Result | Reporting Limit | Units | Spike Level | Source Result | %REC | %REC Limits | RPD | RPD Limit | Notes |
|---|---|---|---|---|---|---|---|---|---|---|
| **Total Metals CAM 17 - Quality Control** | | | | | | | | | | |
| *Batch B6E0220 - EPA 3050B* | | | | | | | | | | |
| **Matrix Spike Dup (B6E0220-MSD1) Continued** | | | **Source: 6D29007-01** | Prepared: 05/02/16 Analyzed: 05/03/16 | | | | | | |
| Lead | **57.2** | 3.0 | mg/kg | 50 | 7.10 | 100 | 75-125 | 2.57 | 40 | |
| Molybdenum | **49.0** | 5.0 | mg/kg | 50 | <5.0 | 98.0 | 75-125 | 2.51 | 40 | |
| Nickel | **57.6** | 3.0 | mg/kg | 50 | 11.6 | 92.1 | 75-125 | 0.260 | 40 | |
| Selenium | **48.0** | 0.50 | mg/kg | 50 | <0.50 | 96.0 | 75-125 | 2.66 | 40 | |
| Silver | **47.6** | 1.0 | mg/kg | 50 | <1.0 | 95.3 | 75-125 | 1.24 | 40 | |
| Thallium | **39.0** | 5.0 | mg/kg | 50 | <5.0 | 78.0 | 60-140 | 2.87 | 40 | |
| Vanadium | **103** | 10 | mg/kg | 50 | 58.4 | 90.1 | 75-125 | 3.84 | 40 | |
| Zinc | **136** | 3.0 | mg/kg | 50 | 90.6 | 90.4 | 75-125 | 4.21 | 40 | |
| **Total Metals CAM 17 - Quality Control** | | | | | | | | | | |
| *Batch B6E0221 - EPA 7471A Prep* | | | | | | | | | | |
| **Blank (B6E0221-BLK1)** | | | | Prepared & Analyzed: 05/02/16 | | | | | | |
| Mercury | <0.020 | 0.020 | mg/kg | | | | | | | |
| **LCS (B6E0221-BS1)** | | | | Prepared & Analyzed: 05/02/16 | | | | | | |
| Mercury | **0.541** | 0.020 | mg/kg | 0.50 | | 108 | 80-120 | | | |
| **LCS Dup (B6E0221-BSD1)** | | | | Prepared & Analyzed: 05/02/16 | | | | | | |
| Mercury | **0.540** | 0.020 | mg/kg | 0.50 | | 108 | 80-120 | 0.278 | 25 | |
| **Matrix Spike (B6E0221-MS1)** | | | **Source: 6D29007-01** | Prepared & Analyzed: 05/02/16 | | | | | | |
| Mercury | **0.609** | 0.020 | mg/kg | 0.50 | 0.0865 | 104 | 75-125 | | | |
| **Matrix Spike Dup (B6E0221-MSD1)** | | | **Source: 6D29007-01** | Prepared & Analyzed: 05/02/16 | | | | | | |
| Mercury | **0.633** | 0.020 | mg/kg | 0.50 | 0.0865 | 109 | 75-125 | 3.86 | 25 | |
| **Soluble Metals STLC by ICP - Quality Control** | | | | | | | | | | |
| *Batch B6E0426 - EPA 3010A* | | | | | | | | | | |
| **Blank (B6E0426-BLK1)** | | | | Prepared: 05/04/16 Analyzed: 05/05/16 | | | | | | |
| Lead | <0.50 | 0.50 | mg/L | | | | | | | |
| **LCS (B6E0426-BS1)** | | | | Prepared: 05/04/16 Analyzed: 05/05/16 | | | | | | |
| Lead | **1.03** | 0.50 | mg/L | 1.0 | | 103 | 80-120 | | | |
| **LCS Dup (B6E0426-BSD1)** | | | | Prepared: 05/04/16 Analyzed: 05/05/16 | | | | | | |
| Lead | **1.02** | 0.50 | mg/L | 1.0 | | 102 | 80-120 | 0.974 | 20 | |

**Viorel Vasile**
Operations Manager

# LABORATORY ANALYSIS RESULTS

**Client:** Stantec (TO)
**Project No:** 2057123300
**Project Name:** Grayson Power Plant Glendale Phase II

**AA Project No:** A732177
**Date Received:** 04/29/16
**Date Reported:** 05/24/16

| Analyte | Result | Reporting Limit | Units | Spike Level | Source Result | %REC | %REC Limits | RPD | RPD Limit | Notes |
|---|---|---|---|---|---|---|---|---|---|---|
| **Soluble Metals STLC by ICP - Quality Control** | | | | | | | | | | |
| *Batch B6E0426 - EPA 3010A* | | | | | | | | | | |
| **Matrix Spike (B6E0426-MS1)** | | **Source: 6D29007-16** | | Prepared: 05/04/16 | | Analyzed: 05/05/16 | | | | |
| Lead | **1.40** | 0.50 | mg/L | 1.0 | 0.282 | 112 | 75-125 | | | |
| **Matrix Spike Dup (B6E0426-MSD1)** | | **Source: 6D29007-16** | | Prepared: 05/04/16 | | Analyzed: 05/05/16 | | | | |
| Lead | **1.39** | 0.50 | mg/L | 1.0 | 0.282 | 111 | 75-125 | 1.05 | 20 | |
| **Soluble Metals TCLP by ICP - Quality Control** | | | | | | | | | | |
| *Batch B6E0327 - EPA 3010A* | | | | | | | | | | |
| **Blank (B6E0327-BLK1)** | | | | Prepared: 05/03/16 | | Analyzed: 05/05/16 | | | | |
| Lead | <0.50 | 0.50 | mg/L | | | | | | | |
| **LCS (B6E0327-BS1)** | | | | Prepared: 05/03/16 | | Analyzed: 05/05/16 | | | | |
| Lead | **0.981** | 0.50 | mg/L | 1.0 | | 98.1 | 80-120 | | | |
| **LCS Dup (B6E0327-BSD1)** | | | | Prepared: 05/03/16 | | Analyzed: 05/05/16 | | | | |
| Lead | **0.973** | 0.50 | mg/L | 1.0 | | 97.3 | 80-120 | 0.819 | 20 | |
| **Matrix Spike (B6E0327-MS1)** | | **Source: 6D29007-16** | | Prepared: 05/03/16 | | Analyzed: 05/05/16 | | | | |
| Lead | **1.06** | 0.50 | mg/L | 1.0 | <0.50 | 106 | 75-125 | | | |
| **Matrix Spike Dup (B6E0327-MSD1)** | | **Source: 6D29007-16** | | Prepared: 05/03/16 | | Analyzed: 05/05/16 | | | | |
| Lead | **1.06** | 0.50 | mg/L | 1.0 | <0.50 | 106 | 75-125 | 0.00 | 20 | |

**Viorel Vasile**
Operations Manager

# LABORATORY ANALYSIS RESULTS

| | | | |
|---|---|---|---|
| **Client:** | Stantec (TO) | **AA Project No:** | A732177 |
| **Project No:** | 2057123300 | **Date Received:** | 04/29/16 |
| **Project Name:** | Grayson Power Plant Glendale Phase II | **Date Reported:** | 05/24/16 |

**Special Notes**

**[1] = **** : Exceeds upper control limit

**[2] = ***** : Exceeds lower control limit

**[3] = QM-07** : The spike recovery was outside acceptance limits for the MS and/or MSD. The batch was accepted based on acceptable LCS recovery.

**[4] = S-GC** : Surrogate recovery outside of control limits. The data was accepted based on valid recovery of the remaining surrogate(s).

Gasoline Range Organics (GRO) concentration represents the C4-C12 carbon range.

**Viorel Vasile**
Operations Manager

17502

Stantec

# CHAIN OF CUSTODY FORM

25864-F Business Center Dr., Redlands, CA 92374 (909) 335 6116, Fax (909) 335 6120

A732177/GD29007



Client Name/Address:
Stantec
25864-F Business Center Drive
Redlands, CA 92374

Project/PO Number: 205712200

Laboratory: American Analytics

Project Manager: Carl Hosse
Email Address: Carl.Hosse@Stantec.com

Phone Number: 909-335-6116

Fax Number: 909-335-6120

Sampler: J. Sargent Joshua.Sargent@Stantec.com

Analysis Required

| Sample Description | Sample Matrix | Container Type | # of Cont. | Sampling Date | Sampling Time | Preservatives | TPH Gas | TPH Diesel | Cr (VI) 7199 | HOLD | GD29007 | Special Instructions |
|---|---|---|---|---|---|---|---|---|---|---|---|---|
| SB-10-1 | Soil | Varies | 1 | 4.29.16 | 0630 | Varies | | | X | | -01 | PID: 0.1 |
| SB-10-10 | | | 4 | | 0647 | | X | X | X | | -02 | PID: 0.4/Tan |
| SB-10-15 | | | 4 | | 0650 | | X | X | | | -03 | PID: 0.1/Tan |
| SB-10-20 | | | 4 | | 0656 | | | | | X | -04 | PID: 0.0 |
| SB-13-1 | | | 1 | | 0700 | | | | X | | -05 | PID: 0.0 |
| SB-13-5 | | | 4 | | 0724 | | X | X | X | | -06 | PID: 0.1 |
| SB-13-15 | | | 4 | | 0735 | | X | X | | | -07 | PID: 0.0 |
| SB-13-25 | | | 4 | | 0741 | | | | | X | -08 | PID: 0.0 |
| SB-2-1 | | | 1 | | 0755 | | | | X | | -09 | PID: 0.0 |
| SB-2-10 | | | 4 | | 0820 | | X | X | X | | -10 | PID: 0.1 |
| SB-2-20 | | | 4 | | 0845 | | X | X | | | -11 | PID: 0.0 |

REVIEWED Date 4/29/16 Time 1330 TAT N Days Sign

| Relinquished By: | Date/Time: | Received By: | Date/Time: |
|---|---|---|---|
| [signature] | 4.29.16 1233 | [signature] | 04/29/16 1233 |
| Relinquished By: | Date/Time: | Received By: | Date/Time: |
| Relinquished By: | Date/Time: | Received in Lab By: | Date/Time: |

Turnaround Time: Same day / 12 hours; 24 hour / 5 days; 48 hour / Normal

Sample Integrity: (Check) Intact X on ice X

**Note:** By relinquishing samples, client agrees to pay for the services requested on this chain of custody form and any additional analyses performed on this project. Payment for services is due within 30 days from the date of invoice. Sample(s) will be disposed of after 30 days.

R5022

Stantec

# CHAIN OF CUSTODY FORM

25864-F Business Center Dr., Redlands, CA 92374 (909) 335-6116, Fax (909) 335-6120

A732177/60529007



Client Name/Address:
Stantec
25864-F Business Center Drive
Redlands, CA 92374

Project/PO Number: 2057123300

Laboratory: Hunter Analytics

Project Manager: Carl Hasse
Email Address: Carl.Hasse@Stantec.com

Phone Number: 909 335 6116

Fax Number: 909-335-6120

Sampler: J. Sargent Joshua.Sargent@Stantec.com

Analysis Required

| Sample Description | Sample Matrix | Container Type | # of Cont. | Sampling Date | Sampling Time | Preservatives | TPH 8015 | VOC Oxygenates 8260 | Carbon Dioxide | Soil O (%) 7199 | Hold | TCLP/STLC | GBS/PQ17 | | | Special Instructions |
|---|---|---|---|---|---|---|---|---|---|---|---|---|---|---|---|---|
| SB-4-1 | Soil | Varies | 1 | 4.29.16 | 0915 | Varies | | | X | | | | -12 | | | PID: 0.9 |
| SB-4-5 | | | 4 | | 0944 | | X | X | | X | | | -13 | | | PID: 39.3 |
| SB-4-10 | | | 4 | | 0948 | | X | X | | | | | -14 | | | PID: 5.6 |
| SB-4-20 | | | 4 | | 0959 | | | | | | X | | -15 | | | PID 0.0 |
| Drum Profile | Soil | 55 gal | 1 | 4.29.16 | 1142 | na | | | | | | X | -16 | | | ~~Extract & Hold~~ |
| SB-4-1 | Soil | Varies | 1 | 4.29.16 | 1326 | Varies | | | X | | | | -17 | | | PID: 0.0 |
| SB-4-10 | | | 4 | | 0939 | | X | X | | X | | | -18 | | | PID: 0.0 |
| SB-4-20 | | | 4 | | 0904 | | X | X | | | | | -19 | | | PID: 0.0 |
| SB-4-35 | | | 4 | | 0915 | | | | | | X | | -20 | | | PID: 0.1 |

REVIEWED Date 4/29/16 Time 1330 TAT N Days SBP

(X) Can. for Lab Quality

| Relinquished By: | Date/Time: | Received By: | Date/Time: |
|---|---|---|---|
| | 4.29.16 1233 | | 4/29/16 1233 |
| Relinquished By: | Date/Time: | Received By: | Date/Time: |
| Relinquished By: | Date/Time: | Received in Lab By: | Date/Time: |

Turnaround time: Same day / 12 hours; 24 hour / 5 days; 48 hour / normal

Sample Integrity: (Check) Intact X on ice X

**Note:** By relinquishing samples, client agrees to pay for the services requested on this chain of custody form and any additional analyses performed on this project. Payment for services is due within 30 days from the date of invoice. Sample(s) will be disposed of after 30 days.

9765 Eton Avenue
Chatsworth
California 91311
Tel: (818) 998-5547
Fax: (818) 998-7258

May 18, 2016

Anuya Sawant

Stantec (TO)

290 Conejo Ridge Ave. Suite #200

Thousand Oaks, CA 91361

**Re : Grayson Power Plant Glendale Phase II / 2057123300**

**A732178 / 6E03026**

Enclosed is an analytical report for the above-referenced project. The samples included in this report were received on 05/03/16 12:51 and analyzed in accordance with the attached chain-of-custody.

Unless otherwise noted, all analytical testing was accomplished in accordance with the guidelines established in our Quality Assurance Program Manual, applicable standard operating procedures, and other related documentation. The results in this analytical report are limited to the samples tested and any reproduction thereof must be made in its entirety.

If you have any questions regarding this report or require additional information please call me at American Analytics.

Sincerely,

Viorel Vasile

Operations Manager

# LABORATORY ANALYSIS RESULTS

**Client:** Stantec (TO)
**Project No:** 2057123300
**Project Name:** Grayson Power Plant Glendale Phase II

**AA Project No:** A732178
**Date Received:** 05/03/16
**Date Reported:** 05/18/16

| Sample ID | Laboratory ID | Matrix | TAT | Date Sampled | Date Received |
|---|---|---|---|---|---|
| **TO-15 (Mid Level)** | | | | | |
| SB-16-5-SV | 6E03026-01 | Vapor | 7 | 05/02/16 09:17 | 05/03/16 12:51 |
| SB-16-11-SV | 6E03026-02 | Vapor | 7 | 05/02/16 09:13 | 05/03/16 12:51 |
| SB-15-5-SV | 6E03026-03 | Vapor | 7 | 05/02/16 09:50 | 05/03/16 12:51 |
| SB-15-11-SV | 6E03026-04 | Vapor | 7 | 05/02/16 10:00 | 05/03/16 12:51 |
| SB-14-5-SV | 6E03026-05 | Vapor | 7 | 05/02/16 10:20 | 05/03/16 12:51 |
| SB-14-15-SV | 6E03026-06 | Vapor | 7 | 05/02/16 10:39 | 05/03/16 12:51 |
| SB-12-5-SV | 6E03026-07 | Vapor | 7 | 05/02/16 11:51 | 05/03/16 12:51 |
| SB-12-15-SV | 6E03026-08 | Vapor | 7 | 05/02/16 11:57 | 05/03/16 12:51 |
| SB-12-30-SV | 6E03026-09 | Vapor | 7 | 05/02/16 12:06 | 05/03/16 12:51 |
| SB-8-5-SV | 6E03026-10 | Vapor | 7 | 05/02/16 12:30 | 05/03/16 12:51 |
| SB-8-15-SV | 6E03026-11 | Vapor | 7 | 05/02/16 12:39 | 05/03/16 12:51 |
| SB-8-30-SV | 6E03026-12 | Vapor | 7 | 05/02/16 12:51 | 05/03/16 12:51 |
| SB-6-5-SV | 6E03026-13 | Vapor | 7 | 05/02/16 13:36 | 05/03/16 12:51 |
| SB-6-15-SV | 6E03026-14 | Vapor | 7 | 05/02/16 13:45 | 05/03/16 12:51 |
| SB-6-30-SV | 6E03026-15 | Vapor | 7 | 05/02/16 13:53 | 05/03/16 12:51 |

**Viorel Vasile**
Operations Manager

# LABORATORY ANALYSIS RESULTS

| | | | |
|---|---|---|---|
| **Client:** | Stantec (TO) | **AA Project No:** | A732178 |
| **Project No:** | 2057123300 | **Date Received:** | 05/03/16 |
| **Project Name:** | Grayson Power Plant Glendale Phase II | **Date Reported:** | 05/18/16 |
| **Matrix:** | Vapor | **Sampled:** | 05/02/16 |
| **Dilution:** | 2 | **Prepared:** | 05/12/16 |
| **Method:** | VOCs by GCMS EPA TO-15 | **Analyzed:** | 05/12/16 |

**SB-16-5-SV**

**6E03026-01 (Vapor)**

| Analyte | Result | (ug/L) | MRL | Result | (ppmv) | MRL |
|---|---|---|---|---|---|---|
| Acetone | <0.020 | ug/L | 0.010 | <0.0084 | ppmv | 0.0042 |
| Allyl chloride | <0.020 | ug/L | 0.010 | <0.0064 | ppmv | 0.0032 |
| tert-Amyl Methyl Ether (TAME) | <0.020 | ug/L | 0.010 | <0.0048 | ppmv | 0.0024 |
| Benzene | <0.020 | ug/L | 0.010 | <0.0063 | ppmv | 0.0031 |
| Benzyl chloride | <0.020 | ug/L | 0.010 | <0.0039 | ppmv | 0.0019 |
| Bromodichloromethane | <0.020 | ug/L | 0.010 | <0.003 | ppmv | 0.0015 |
| Bromoform | <0.020 | ug/L | 0.010 | <0.0019 | ppmv | 0.00097 |
| Bromomethane | <0.020 | ug/L | 0.010 | <0.0052 | ppmv | 0.0026 |
| 1,3-Butadiene | <0.020 | ug/L | 0.010 | <0.009 | ppmv | 0.0045 |
| 2-Butanone (MEK) | <0.020 | ug/L | 0.010 | <0.0068 | ppmv | 0.0034 |
| tert-Butyl alcohol (TBA) | <0.020 | ug/L | 0.010 | <0.0066 | ppmv | 0.0033 |
| Carbon Disulfide | <0.020 | ug/L | 0.010 | <0.0064 | ppmv | 0.0032 |
| Carbon Tetrachloride | <0.020 | ug/L | 0.010 | <0.0032 | ppmv | 0.0016 |
| Chlorobenzene | <0.020 | ug/L | 0.010 | <0.0043 | ppmv | 0.0022 |
| Chloroethane | <0.020 | ug/L | 0.010 | <0.0076 | ppmv | 0.0038 |
| Chloroform | <0.020 | ug/L | 0.010 | <0.0041 | ppmv | 0.002 |
| Chloromethane | <0.020 | ug/L | 0.010 | <0.0097 | ppmv | 0.0048 |
| Cyclohexane | <0.020 | ug/L | 0.010 | <0.0058 | ppmv | 0.0029 |
| Dibromochloromethane | <0.020 | ug/L | 0.010 | <0.0023 | ppmv | 0.0012 |
| 1,2-Dibromoethane (EDB) | <0.020 | ug/L | 0.010 | <0.0026 | ppmv | 0.0013 |
| 1,2-Dichlorobenzene | <0.020 | ug/L | 0.010 | <0.0033 | ppmv | 0.0017 |

**Viorel Vasile**
Operations Manager

# LABORATORY ANALYSIS RESULTS

| | | | |
|---|---|---|---|
| **Client:** | Stantec (TO) | **AA Project No:** | A732178 |
| **Project No:** | 2057123300 | **Date Received:** | 05/03/16 |
| **Project Name:** | Grayson Power Plant Glendale Phase II | **Date Reported:** | 05/18/16 |
| **Matrix:** | Vapor | **Sampled:** | 05/02/16 |
| **Dilution:** | 2 | **Prepared:** | 05/12/16 |
| **Method:** | VOCs by GCMS EPA TO-15 | **Analyzed:** | 05/12/16 |

**SB-16-5-SV**

**6E03026-01 (Vapor)**

| Analyte | Result | (ug/L) | MRL | Result | (ppmv) | MRL |
|---|---|---|---|---|---|---|
| 1,3-Dichlorobenzene | <0.020 | ug/L | 0.010 | <0.0033 | ppmv | 0.0017 |
| 1,4-Dichlorobenzene | <0.020 | ug/L | 0.010 | <0.0033 | ppmv | 0.0017 |
| Dichlorodifluoromethane (R12) | <0.020 | ug/L | 0.010 | <0.004 | ppmv | 0.002 |
| 1,1-Dichloroethane | <0.020 | ug/L | 0.010 | <0.0049 | ppmv | 0.0025 |
| 1,2-Dichloroethane (EDC) | <0.020 | ug/L | 0.010 | <0.0049 | ppmv | 0.0025 |
| cis-1,2-Dichloroethylene | <0.020 | ug/L | 0.010 | <0.005 | ppmv | 0.0025 |
| 1,1-Dichloroethylene | <0.020 | ug/L | 0.010 | <0.005 | ppmv | 0.0025 |
| trans-1,2-Dichloroethylene | <0.020 | ug/L | 0.010 | <0.005 | ppmv | 0.0025 |
| 1,2-Dichloropropane | <0.020 | ug/L | 0.010 | <0.0043 | ppmv | 0.0022 |
| trans-1,3-Dichloropropylene | <0.020 | ug/L | 0.010 | <0.0044 | ppmv | 0.0022 |
| cis-1,3-Dichloropropylene | <0.020 | ug/L | 0.010 | <0.0044 | ppmv | 0.0022 |
| Dichlorotetrafluoroethane | <0.020 | ug/L | 0.010 | <0.0029 | ppmv | 0.0014 |
| Diisopropyl ether (DIPE) | <0.020 | ug/L | 0.010 | <0.0048 | ppmv | 0.0024 |
| 1,4-Dioxane | <0.020 | ug/L | 0.010 | <0.0055 | ppmv | 0.0028 |
| Ethanol | <0.020 | ug/L | 0.010 | <0.011 | ppmv | 0.0053 |
| Ethyl Acetate | <0.020 | ug/L | 0.010 | <0.0055 | ppmv | 0.0028 |
| Ethylbenzene | <0.020 | ug/L | 0.010 | <0.0046 | ppmv | 0.0023 |
| Ethyl-tert-Butyl Ether (ETBE) | <0.020 | ug/L | 0.010 | <0.0048 | ppmv | 0.0024 |
| 4-Ethyltoluene | <0.020 | ug/L | 0.010 | <0.0041 | ppmv | 0.002 |
| Heptane | <0.020 | ug/L | 0.010 | <0.0049 | ppmv | 0.0024 |
| Hexachlorobutadiene | <0.020 | ug/L | 0.010 | <0.0019 | ppmv | 0.00094 |

**Viorel Vasile**
Operations Manager

# LABORATORY ANALYSIS RESULTS

| | | | |
|---|---|---|---|
| **Client:** | Stantec (TO) | **AA Project No:** | A732178 |
| **Project No:** | 2057123300 | **Date Received:** | 05/03/16 |
| **Project Name:** | Grayson Power Plant Glendale Phase II | **Date Reported:** | 05/18/16 |
| **Matrix:** | Vapor | **Sampled:** | 05/02/16 |
| **Dilution:** | 2 | **Prepared:** | 05/12/16 |
| **Method:** | VOCs by GCMS EPA TO-15 | **Analyzed:** | 05/12/16 |

**SB-16-5-SV**

**6E03026-01 (Vapor)**

| Analyte | Result | (ug/L) | MRL | Result | (ppmv) | MRL |
|---|---|---|---|---|---|---|
| n-Hexane | <0.020 | ug/L | 0.010 | <0.0057 | ppmv | 0.0028 |
| 2-Hexanone (MBK) | <0.020 | ug/L | 0.010 | <0.0049 | ppmv | 0.0024 |
| Isopropanol (IPA) | **0.054** | ug/L | 0.010 | **0.022** | ppmv | 0.0041 |
| Methyl-tert-Butyl Ether (MTBE) | <0.020 | ug/L | 0.010 | <0.0055 | ppmv | 0.0028 |
| Methylene Chloride | <0.020 | ug/L | 0.010 | <0.0058 | ppmv | 0.0029 |
| 4-Methyl-2-pentanone (MIBK) | <0.020 | ug/L | 0.010 | <0.0049 | ppmv | 0.0024 |
| Naphthalene | <0.020 | ug/L | 0.010 | <0.0038 | ppmv | 0.0019 |
| Propylene | <0.020 | ug/L | 0.010 | <0.012 | ppmv | 0.0058 |
| Styrene | **0.031** | ug/L | 0.010 | **0.0073** | ppmv | 0.0023 |
| 1,1,2,2-Tetrachloroethane | <0.020 | ug/L | 0.010 | <0.0029 | ppmv | 0.0015 |
| Tetrachloroethylene (PCE) | **0.93** | ug/L | 0.010 | **0.14** | ppmv | 0.0015 |
| Tetrahydrofuran (THF) | <0.020 | ug/L | 0.010 | <0.0068 | ppmv | 0.0034 |
| Toluene | <0.020 | ug/L | 0.010 | <0.0053 | ppmv | 0.0027 |
| 1,2,4-Trichlorobenzene | <0.020 | ug/L | 0.010 | <0.0027 | ppmv | 0.0013 |
| 1,1,2-Trichloroethane | <0.020 | ug/L | 0.010 | <0.0037 | ppmv | 0.0018 |
| 1,1,1-Trichloroethane | <0.020 | ug/L | 0.010 | <0.0037 | ppmv | 0.0018 |
| Trichloroethylene (TCE) | **0.25** | ug/L | 0.010 | **0.047** | ppmv | 0.0019 |
| Trichlorofluoromethane (R11) | <0.020 | ug/L | 0.010 | <0.0036 | ppmv | 0.0018 |
| 1,1,2-Trichloro-1,2,2-trifluoroethane (R113) | <0.020 | ug/L | 0.010 | <0.0026 | ppmv | 0.0013 |
| 1,3,5-Trimethylbenzene | <0.020 | ug/L | 0.010 | <0.0041 | ppmv | 0.002 |

**Viorel Vasile**
Operations Manager

# LABORATORY ANALYSIS RESULTS

| | | | |
|---|---|---|---|
| **Client:** | Stantec (TO) | **AA Project No:** | A732178 |
| **Project No:** | 2057123300 | **Date Received:** | 05/03/16 |
| **Project Name:** | Grayson Power Plant Glendale Phase II | **Date Reported:** | 05/18/16 |
| **Matrix:** | Vapor | **Sampled:** | 05/02/16 |
| **Dilution:** | 2 | **Prepared:** | 05/12/16 |
| **Method:** | VOCs by GCMS EPA TO-15 | **Analyzed:** | 05/12/16 |

**SB-16-5-SV**

**6E03026-01 (Vapor)**

| Analyte | Result | (ug/L) | MRL | Result | (ppmv) | MRL |
|---|---|---|---|---|---|---|
| 1,2,4-Trimethylbenzene | <0.020 | ug/L | 0.010 | <0.0041 | ppmv | 0.002 |
| 2,2,4-Trimethylpentane | <0.020 | ug/L | 0.010 | <0.0043 | ppmv | 0.0021 |
| Vinyl acetate | <0.020 | ug/L | 0.010 | <0.0057 | ppmv | 0.0028 |
| Vinyl bromide | <0.020 | ug/L | 0.010 | <0.0046 | ppmv | 0.0023 |
| Vinyl chloride | <0.020 | ug/L | 0.010 | <0.0078 | ppmv | 0.0039 |
| o-Xylene | <0.020 | ug/L | 0.010 | <0.0046 | ppmv | 0.0023 |
| m,p-Xylenes | <0.020 | ug/L | 0.010 | <0.0046 | ppmv | 0.0023 |
| 1,2,3-Trichloropropane | <0.020 | ug/L | 0.010 | <0.0033 | ppmv | 0.0017 |
| sec-Butylbenzene | <0.020 | ug/L | 0.010 | <0.0036 | ppmv | 0.0018 |
| Isopropylbenzene | <0.020 | ug/L | 0.010 | <0.0041 | ppmv | 0.002 |
| n-Propylbenzene | <0.020 | ug/L | 0.010 | <0.0041 | ppmv | 0.002 |
| 4-Isopropyltoluene | <0.020 | ug/L | 0.010 | <0.0036 | ppmv | 0.0018 |
| n-Butylbenzene | <0.020 | ug/L | 0.010 | <0.0036 | ppmv | 0.0018 |

| Surrogates | %REC | %REC Limits |
|---|---|---|
| 4-Bromofluorobenzene | 103 % | 70-130 |

**Viorel Vasile**
Operations Manager

# LABORATORY ANALYSIS RESULTS

| | | | |
|---|---|---|---|
| **Client:** | Stantec (TO) | **AA Project No:** | A732178 |
| **Project No:** | 2057123300 | **Date Received:** | 05/03/16 |
| **Project Name:** | Grayson Power Plant Glendale Phase II | **Date Reported:** | 05/18/16 |
| **Matrix:** | Vapor | **Sampled:** | 05/02/16 |
| **Dilution:** | 2 | **Prepared:** | 05/11/16 |
| **Method:** | VOCs by GCMS EPA TO-15 | **Analyzed:** | 05/11/16 |

**SB-16-11-SV**

**6E03026-02 (Vapor)**

| Analyte | Result | (ug/L) | MRL | Result | (ppmv) | MRL |
|---|---|---|---|---|---|---|
| Acetone | <0.020 | ug/L | 0.010 | <0.0084 | ppmv | 0.0042 |
| Allyl chloride | <0.020 | ug/L | 0.010 | <0.0064 | ppmv | 0.0032 |
| tert-Amyl Methyl Ether (TAME) | <0.020 | ug/L | 0.010 | <0.0048 | ppmv | 0.0024 |
| Benzene | <0.020 | ug/L | 0.010 | <0.0063 | ppmv | 0.0031 |
| Benzyl chloride | <0.020 | ug/L | 0.010 | <0.0039 | ppmv | 0.0019 |
| Bromodichloromethane | <0.020 | ug/L | 0.010 | <0.003 | ppmv | 0.0015 |
| Bromoform | <0.020 | ug/L | 0.010 | <0.0019 | ppmv | 0.00097 |
| Bromomethane | <0.020 | ug/L | 0.010 | <0.0052 | ppmv | 0.0026 |
| 1,3-Butadiene | <0.020 | ug/L | 0.010 | <0.009 | ppmv | 0.0045 |
| 2-Butanone (MEK) | <0.020 | ug/L | 0.010 | <0.0068 | ppmv | 0.0034 |
| tert-Butyl alcohol (TBA) | <0.020 | ug/L | 0.010 | <0.0066 | ppmv | 0.0033 |
| Carbon Disulfide | <0.020 | ug/L | 0.010 | <0.0064 | ppmv | 0.0032 |
| Carbon Tetrachloride | **0.025** | ug/L | 0.010 | **0.004** | ppmv | 0.0016 |
| Chlorobenzene | <0.020 | ug/L | 0.010 | <0.0043 | ppmv | 0.0022 |
| Chloroethane | <0.020 | ug/L | 0.010 | <0.0076 | ppmv | 0.0038 |
| Chloroform | **0.028** | ug/L | 0.010 | **0.0057** | ppmv | 0.002 |
| Chloromethane | <0.020 | ug/L | 0.010 | <0.0097 | ppmv | 0.0048 |
| Cyclohexane | <0.020 | ug/L | 0.010 | <0.0058 | ppmv | 0.0029 |
| Dibromochloromethane | <0.020 | ug/L | 0.010 | <0.0023 | ppmv | 0.0012 |
| 1,2-Dibromoethane (EDB) | <0.020 | ug/L | 0.010 | <0.0026 | ppmv | 0.0013 |
| 1,2-Dichlorobenzene | <0.020 | ug/L | 0.010 | <0.0033 | ppmv | 0.0017 |

**Viorel Vasile**
Operations Manager

# LABORATORY ANALYSIS RESULTS

| | | | |
|---|---|---|---|
| **Client:** | Stantec (TO) | **AA Project No:** | A732178 |
| **Project No:** | 2057123300 | **Date Received:** | 05/03/16 |
| **Project Name:** | Grayson Power Plant Glendale Phase II | **Date Reported:** | 05/18/16 |
| **Matrix:** | Vapor | **Sampled:** | 05/02/16 |
| **Dilution:** | 2 | **Prepared:** | 05/11/16 |
| **Method:** | VOCs by GCMS EPA TO-15 | **Analyzed:** | 05/11/16 |

**SB-16-11-SV**

**6E03026-02 (Vapor)**

| Analyte | Result | (ug/L) | MRL | Result | (ppmv) | MRL |
|---|---|---|---|---|---|---|
| 1,3-Dichlorobenzene | <0.020 | ug/L | 0.010 | <0.0033 | ppmv | 0.0017 |
| 1,4-Dichlorobenzene | <0.020 | ug/L | 0.010 | <0.0033 | ppmv | 0.0017 |
| Dichlorodifluoromethane (R12) | <0.020 | ug/L | 0.010 | <0.004 | ppmv | 0.002 |
| 1,1-Dichloroethane | <0.020 | ug/L | 0.010 | <0.0049 | ppmv | 0.0025 |
| 1,2-Dichloroethane (EDC) | <0.020 | ug/L | 0.010 | <0.0049 | ppmv | 0.0025 |
| cis-1,2-Dichloroethylene | **0.036** | ug/L | 0.010 | **0.0091** | ppmv | 0.0025 |
| 1,1-Dichloroethylene | **0.043** | ug/L | 0.010 | **0.011** | ppmv | 0.0025 |
| trans-1,2-Dichloroethylene | <0.020 | ug/L | 0.010 | <0.005 | ppmv | 0.0025 |
| 1,2-Dichloropropane | <0.020 | ug/L | 0.010 | <0.0043 | ppmv | 0.0022 |
| trans-1,3-Dichloropropylene | <0.020 | ug/L | 0.010 | <0.0044 | ppmv | 0.0022 |
| cis-1,3-Dichloropropylene | <0.020 | ug/L | 0.010 | <0.0044 | ppmv | 0.0022 |
| Dichlorotetrafluoroethane | <0.020 | ug/L | 0.010 | <0.0029 | ppmv | 0.0014 |
| Diisopropyl ether (DIPE) | <0.020 | ug/L | 0.010 | <0.0048 | ppmv | 0.0024 |
| 1,4-Dioxane | <0.020 | ug/L | 0.010 | <0.0055 | ppmv | 0.0028 |
| Ethanol | **0.028** | ug/L | 0.010 | **0.015** | ppmv | 0.0053 |
| Ethyl Acetate | <0.020 | ug/L | 0.010 | <0.0055 | ppmv | 0.0028 |
| Ethylbenzene | <0.020 | ug/L | 0.010 | <0.0046 | ppmv | 0.0023 |
| Ethyl-tert-Butyl Ether (ETBE) | <0.020 | ug/L | 0.010 | <0.0048 | ppmv | 0.0024 |
| 4-Ethyltoluene | <0.020 | ug/L | 0.010 | <0.0041 | ppmv | 0.002 |
| Heptane | <0.020 | ug/L | 0.010 | <0.0049 | ppmv | 0.0024 |
| Hexachlorobutadiene | <0.020 | ug/L | 0.010 | <0.0019 | ppmv | 0.00094 |

**Viorel Vasile**
Operations Manager

# LABORATORY ANALYSIS RESULTS

| | | | |
|---|---|---|---|
| **Client:** | Stantec (TO) | **AA Project No:** | A732178 |
| **Project No:** | 2057123300 | **Date Received:** | 05/03/16 |
| **Project Name:** | Grayson Power Plant Glendale Phase II | **Date Reported:** | 05/18/16 |
| **Matrix:** | Vapor | **Sampled:** | 05/02/16 |
| **Dilution:** | 2 | **Prepared:** | 05/11/16 |
| **Method:** | VOCs by GCMS EPA TO-15 | **Analyzed:** | 05/11/16 |

**SB-16-11-SV**

**6E03026-02 (Vapor)**

| Analyte | Result | (ug/L) | MRL | Result | (ppmv) | MRL |
|---|---|---|---|---|---|---|
| n-Hexane | <0.020 | ug/L | 0.010 | <0.0057 | ppmv | 0.0028 |
| 2-Hexanone (MBK) | <0.020 | ug/L | 0.010 | <0.0049 | ppmv | 0.0024 |
| Isopropanol (IPA) | **0.031** | ug/L | 0.010 | **0.013** | ppmv | 0.0041 |
| Methyl-tert-Butyl Ether (MTBE) | <0.020 | ug/L | 0.010 | <0.0055 | ppmv | 0.0028 |
| Methylene Chloride | <0.020 | ug/L | 0.010 | <0.0058 | ppmv | 0.0029 |
| 4-Methyl-2-pentanone (MIBK) | <0.020 | ug/L | 0.010 | <0.0049 | ppmv | 0.0024 |
| Naphthalene | <0.020 | ug/L | 0.010 | <0.0038 | ppmv | 0.0019 |
| Propylene | <0.020 | ug/L | 0.010 | <0.012 | ppmv | 0.0058 |
| Styrene | **0.083** | ug/L | 0.010 | **0.019** | ppmv | 0.0023 |
| 1,1,2,2-Tetrachloroethane | <0.020 | ug/L | 0.010 | <0.0029 | ppmv | 0.0015 |
| Tetrachloroethylene (PCE) | **1.1** | ug/L | 0.010 | **0.16** | ppmv | 0.0015 |
| Tetrahydrofuran (THF) | <0.020 | ug/L | 0.010 | <0.0068 | ppmv | 0.0034 |
| Toluene | <0.020 | ug/L | 0.010 | <0.0053 | ppmv | 0.0027 |
| 1,2,4-Trichlorobenzene | <0.020 | ug/L | 0.010 | <0.0027 | ppmv | 0.0013 |
| 1,1,2-Trichloroethane | <0.020 | ug/L | 0.010 | <0.0037 | ppmv | 0.0018 |
| 1,1,1-Trichloroethane | <0.020 | ug/L | 0.010 | <0.0037 | ppmv | 0.0018 |
| Trichloroethylene (TCE) | **0.87** | ug/L | 0.010 | **0.16** | ppmv | 0.0019 |
| Trichlorofluoromethane (R11) | <0.020 | ug/L | 0.010 | <0.0036 | ppmv | 0.0018 |
| 1,1,2-Trichloro-1,2,2-trifluoroethane (R113) | **0.023** | ug/L | 0.010 | **0.003** | ppmv | 0.0013 |
| 1,3,5-Trimethylbenzene | <0.020 | ug/L | 0.010 | <0.0041 | ppmv | 0.002 |

**Viorel Vasile**
Operations Manager

# LABORATORY ANALYSIS RESULTS

| | | | |
|---|---|---|---|
| **Client:** | Stantec (TO) | **AA Project No:** | A732178 |
| **Project No:** | 2057123300 | **Date Received:** | 05/03/16 |
| **Project Name:** | Grayson Power Plant Glendale Phase II | **Date Reported:** | 05/18/16 |
| **Matrix:** | Vapor | **Sampled:** | 05/02/16 |
| **Dilution:** | 2 | **Prepared:** | 05/11/16 |
| **Method:** | VOCs by GCMS EPA TO-15 | **Analyzed:** | 05/11/16 |

**SB-16-11-SV**

**6E03026-02 (Vapor)**

| Analyte | Result | (ug/L) | MRL | Result | (ppmv) | MRL |
|---|---|---|---|---|---|---|
| 1,2,4-Trimethylbenzene | <0.020 | ug/L | 0.010 | <0.0041 | ppmv | 0.002 |
| 2,2,4-Trimethylpentane | <0.020 | ug/L | 0.010 | <0.0043 | ppmv | 0.0021 |
| Vinyl acetate | <0.020 | ug/L | 0.010 | <0.0057 | ppmv | 0.0028 |
| Vinyl bromide | <0.020 | ug/L | 0.010 | <0.0046 | ppmv | 0.0023 |
| Vinyl chloride | <0.020 | ug/L | 0.010 | <0.0078 | ppmv | 0.0039 |
| o-Xylene | <0.020 | ug/L | 0.010 | <0.0046 | ppmv | 0.0023 |
| m,p-Xylenes | <0.020 | ug/L | 0.010 | <0.0046 | ppmv | 0.0023 |
| 1,2,3-Trichloropropane | <0.020 | ug/L | 0.010 | <0.0033 | ppmv | 0.0017 |
| sec-Butylbenzene | <0.020 | ug/L | 0.010 | <0.0036 | ppmv | 0.0018 |
| Isopropylbenzene | <0.020 | ug/L | 0.010 | <0.0041 | ppmv | 0.002 |
| n-Propylbenzene | <0.020 | ug/L | 0.010 | <0.0041 | ppmv | 0.002 |
| 4-Isopropyltoluene | <0.020 | ug/L | 0.010 | <0.0036 | ppmv | 0.0018 |
| n-Butylbenzene | <0.020 | ug/L | 0.010 | <0.0036 | ppmv | 0.0018 |

| Surrogates | %REC | %REC Limits |
|---|---|---|
| 4-Bromofluorobenzene | 98.9 % | 70-130 |

**Viorel Vasile**
Operations Manager

# LABORATORY ANALYSIS RESULTS

| | | | |
|---|---|---|---|
| **Client:** | Stantec (TO) | **AA Project No:** | A732178 |
| **Project No:** | 2057123300 | **Date Received:** | 05/03/16 |
| **Project Name:** | Grayson Power Plant Glendale Phase II | **Date Reported:** | 05/18/16 |
| **Matrix:** | Vapor | **Sampled:** | 05/02/16 |
| **Dilution:** | 10 | **Prepared:** | 05/12/16 |
| **Method:** | VOCs by GCMS EPA TO-15 | **Analyzed:** | 05/12/16 |

**SB-15-5-SV**

**6E03026-03 (Vapor)**

| Analyte | Result | (ug/L) | MRL | Result | (ppmv) | MRL |
|---|---|---|---|---|---|---|
| Acetone | <0.10 | ug/L | 0.010 | <0.042 | ppmv | 0.0042 |
| Allyl chloride | <0.10 | ug/L | 0.010 | <0.032 | ppmv | 0.0032 |
| tert-Amyl Methyl Ether (TAME) | <0.10 | ug/L | 0.010 | <0.024 | ppmv | 0.0024 |
| Benzene | <0.10 | ug/L | 0.010 | <0.031 | ppmv | 0.0031 |
| Benzyl chloride | <0.10 | ug/L | 0.010 | <0.019 | ppmv | 0.0019 |
| Bromodichloromethane | <0.10 | ug/L | 0.010 | <0.015 | ppmv | 0.0015 |
| Bromoform | <0.10 | ug/L | 0.010 | <0.0097 | ppmv | 0.00097 |
| Bromomethane | <0.10 | ug/L | 0.010 | <0.026 | ppmv | 0.0026 |
| 1,3-Butadiene | <0.10 | ug/L | 0.010 | <0.045 | ppmv | 0.0045 |
| 2-Butanone (MEK) | <0.10 | ug/L | 0.010 | <0.034 | ppmv | 0.0034 |
| tert-Butyl alcohol (TBA) | <0.10 | ug/L | 0.010 | <0.033 | ppmv | 0.0033 |
| Carbon Disulfide | <0.10 | ug/L | 0.010 | <0.032 | ppmv | 0.0032 |
| Carbon Tetrachloride | <0.10 | ug/L | 0.010 | <0.016 | ppmv | 0.0016 |
| Chlorobenzene | <0.10 | ug/L | 0.010 | <0.022 | ppmv | 0.0022 |
| Chloroethane | <0.10 | ug/L | 0.010 | <0.038 | ppmv | 0.0038 |
| Chloroform | <0.10 | ug/L | 0.010 | <0.020 | ppmv | 0.002 |
| Chloromethane | <0.10 | ug/L | 0.010 | <0.048 | ppmv | 0.0048 |
| Cyclohexane | <0.10 | ug/L | 0.010 | <0.029 | ppmv | 0.0029 |
| Dibromochloromethane | <0.10 | ug/L | 0.010 | <0.012 | ppmv | 0.0012 |
| 1,2-Dibromoethane (EDB) | <0.10 | ug/L | 0.010 | <0.013 | ppmv | 0.0013 |
| 1,2-Dichlorobenzene | <0.10 | ug/L | 0.010 | <0.017 | ppmv | 0.0017 |

**Viorel Vasile**
Operations Manager

# LABORATORY ANALYSIS RESULTS

| | | | |
|---|---|---|---|
| **Client:** | Stantec (TO) | **AA Project No:** | A732178 |
| **Project No:** | 2057123300 | **Date Received:** | 05/03/16 |
| **Project Name:** | Grayson Power Plant Glendale Phase II | **Date Reported:** | 05/18/16 |
| **Matrix:** | Vapor | **Sampled:** | 05/02/16 |
| **Dilution:** | 10 | **Prepared:** | 05/12/16 |
| **Method:** | VOCs by GCMS EPA TO-15 | **Analyzed:** | 05/12/16 |

**SB-15-5-SV**

**6E03026-03 (Vapor)**

| Analyte | Result | (ug/L) | MRL | Result | (ppmv) | MRL |
|---|---|---|---|---|---|---|
| 1,3-Dichlorobenzene | <0.10 | ug/L | 0.010 | <0.017 | ppmv | 0.0017 |
| 1,4-Dichlorobenzene | <0.10 | ug/L | 0.010 | <0.017 | ppmv | 0.0017 |
| Dichlorodifluoromethane (R12) | <0.10 | ug/L | 0.010 | <0.020 | ppmv | 0.002 |
| 1,1-Dichloroethane | <0.10 | ug/L | 0.010 | <0.025 | ppmv | 0.0025 |
| 1,2-Dichloroethane (EDC) | <0.10 | ug/L | 0.010 | <0.025 | ppmv | 0.0025 |
| cis-1,2-Dichloroethylene | <0.10 | ug/L | 0.010 | <0.025 | ppmv | 0.0025 |
| 1,1-Dichloroethylene | **0.61** | ug/L | 0.010 | **0.15** | ppmv | 0.0025 |
| trans-1,2-Dichloroethylene | <0.10 | ug/L | 0.010 | <0.025 | ppmv | 0.0025 |
| 1,2-Dichloropropane | <0.10 | ug/L | 0.010 | <0.022 | ppmv | 0.0022 |
| trans-1,3-Dichloropropylene | <0.10 | ug/L | 0.010 | <0.022 | ppmv | 0.0022 |
| cis-1,3-Dichloropropylene | <0.10 | ug/L | 0.010 | <0.022 | ppmv | 0.0022 |
| Dichlorotetrafluoroethane | <0.10 | ug/L | 0.010 | <0.014 | ppmv | 0.0014 |
| Diisopropyl ether (DIPE) | <0.10 | ug/L | 0.010 | <0.024 | ppmv | 0.0024 |
| 1,4-Dioxane | <0.10 | ug/L | 0.010 | <0.028 | ppmv | 0.0028 |
| Ethanol | <0.10 | ug/L | 0.010 | <0.053 | ppmv | 0.0053 |
| Ethyl Acetate | <0.10 | ug/L | 0.010 | <0.028 | ppmv | 0.0028 |
| Ethylbenzene | <0.10 | ug/L | 0.010 | <0.023 | ppmv | 0.0023 |
| Ethyl-tert-Butyl Ether (ETBE) | <0.10 | ug/L | 0.010 | <0.024 | ppmv | 0.0024 |
| 4-Ethyltoluene | <0.10 | ug/L | 0.010 | <0.020 | ppmv | 0.002 |
| Heptane | <0.10 | ug/L | 0.010 | <0.024 | ppmv | 0.0024 |
| Hexachlorobutadiene | <0.10 | ug/L | 0.010 | <0.0094 | ppmv | 0.00094 |

**Viorel Vasile**
Operations Manager

# LABORATORY ANALYSIS RESULTS

| | | | |
|---|---|---|---|
| **Client:** | Stantec (TO) | **AA Project No:** | A732178 |
| **Project No:** | 2057123300 | **Date Received:** | 05/03/16 |
| **Project Name:** | Grayson Power Plant Glendale Phase II | **Date Reported:** | 05/18/16 |
| **Matrix:** | Vapor | **Sampled:** | 05/02/16 |
| **Dilution:** | 10 | **Prepared:** | 05/12/16 |
| **Method:** | VOCs by GCMS EPA TO-15 | **Analyzed:** | 05/12/16 |

**SB-15-5-SV**

**6E03026-03 (Vapor)**

| Analyte | Result | (ug/L) | MRL | Result | (ppmv) | MRL |
|---|---|---|---|---|---|---|
| n-Hexane | <0.10 | ug/L | 0.010 | <0.028 | ppmv | 0.0028 |
| 2-Hexanone (MBK) | <0.10 | ug/L | 0.010 | <0.024 | ppmv | 0.0024 |
| Isopropanol (IPA) | <0.10 | ug/L | 0.010 | <0.041 | ppmv | 0.0041 |
| Methyl-tert-Butyl Ether (MTBE) | <0.10 | ug/L | 0.010 | <0.028 | ppmv | 0.0028 |
| Methylene Chloride | <0.10 | ug/L | 0.010 | <0.029 | ppmv | 0.0029 |
| 4-Methyl-2-pentanone (MIBK) | <0.10 | ug/L | 0.010 | <0.024 | ppmv | 0.0024 |
| Naphthalene | <0.10 | ug/L | 0.010 | <0.019 | ppmv | 0.0019 |
| Propylene | <0.10 | ug/L | 0.010 | <0.058 | ppmv | 0.0058 |
| Styrene | <0.10 | ug/L | 0.010 | <0.023 | ppmv | 0.0023 |
| 1,1,2,2-Tetrachloroethane | <0.10 | ug/L | 0.010 | <0.015 | ppmv | 0.0015 |
| Tetrachloroethylene (PCE) | **0.55** | ug/L | 0.010 | **0.081** | ppmv | 0.0015 |
| Tetrahydrofuran (THF) | <0.10 | ug/L | 0.010 | <0.034 | ppmv | 0.0034 |
| Toluene | <0.10 | ug/L | 0.010 | <0.027 | ppmv | 0.0027 |
| 1,2,4-Trichlorobenzene | <0.10 | ug/L | 0.010 | <0.013 | ppmv | 0.0013 |
| 1,1,2-Trichloroethane | <0.10 | ug/L | 0.010 | <0.018 | ppmv | 0.0018 |
| 1,1,1-Trichloroethane | <0.10 | ug/L | 0.010 | <0.018 | ppmv | 0.0018 |
| Trichloroethylene (TCE) | **4.5** | ug/L | 0.010 | **0.84** | ppmv | 0.0019 |
| Trichlorofluoromethane (R11) | <0.10 | ug/L | 0.010 | <0.018 | ppmv | 0.0018 |
| 1,1,2-Trichloro-1,2,2-trifluoroethane (R113) | <0.10 | ug/L | 0.010 | <0.013 | ppmv | 0.0013 |
| 1,3,5-Trimethylbenzene | <0.10 | ug/L | 0.010 | <0.020 | ppmv | 0.002 |

**Viorel Vasile**
Operations Manager

# LABORATORY ANALYSIS RESULTS

| | | | |
|---|---|---|---|
| **Client:** | Stantec (TO) | **AA Project No:** | A732178 |
| **Project No:** | 2057123300 | **Date Received:** | 05/03/16 |
| **Project Name:** | Grayson Power Plant Glendale Phase II | **Date Reported:** | 05/18/16 |
| **Matrix:** | Vapor | **Sampled:** | 05/02/16 |
| **Dilution:** | 10 | **Prepared:** | 05/12/16 |
| **Method:** | VOCs by GCMS EPA TO-15 | **Analyzed:** | 05/12/16 |

**SB-15-5-SV**

**6E03026-03 (Vapor)**

| Analyte | Result | (ug/L) | MRL | Result | (ppmv) | MRL |
|---|---|---|---|---|---|---|
| 1,2,4-Trimethylbenzene | <0.10 | ug/L | 0.010 | <0.020 | ppmv | 0.002 |
| 2,2,4-Trimethylpentane | <0.10 | ug/L | 0.010 | <0.021 | ppmv | 0.0021 |
| Vinyl acetate | <0.10 | ug/L | 0.010 | <0.028 | ppmv | 0.0028 |
| Vinyl bromide | <0.10 | ug/L | 0.010 | <0.023 | ppmv | 0.0023 |
| Vinyl chloride | <0.10 | ug/L | 0.010 | <0.039 | ppmv | 0.0039 |
| o-Xylene | <0.10 | ug/L | 0.010 | <0.023 | ppmv | 0.0023 |
| m,p-Xylenes | <0.10 | ug/L | 0.010 | <0.023 | ppmv | 0.0023 |
| 1,2,3-Trichloropropane | <0.10 | ug/L | 0.010 | <0.017 | ppmv | 0.0017 |
| sec-Butylbenzene | <0.10 | ug/L | 0.010 | <0.018 | ppmv | 0.0018 |
| Isopropylbenzene | <0.10 | ug/L | 0.010 | <0.020 | ppmv | 0.002 |
| n-Propylbenzene | <0.10 | ug/L | 0.010 | <0.020 | ppmv | 0.002 |
| 4-Isopropyltoluene | <0.10 | ug/L | 0.010 | <0.018 | ppmv | 0.0018 |
| n-Butylbenzene | <0.10 | ug/L | 0.010 | <0.018 | ppmv | 0.0018 |

| Surrogates | %REC | %REC Limits |
|---|---|---|
| 4-Bromofluorobenzene | 106 % | 70-130 |

**Viorel Vasile**
Operations Manager

# LABORATORY ANALYSIS RESULTS

| | | | |
|---|---|---|---|
| **Client:** | Stantec (TO) | **AA Project No:** | A732178 |
| **Project No:** | 2057123300 | **Date Received:** | 05/03/16 |
| **Project Name:** | Grayson Power Plant Glendale Phase II | **Date Reported:** | 05/18/16 |
| **Matrix:** | Vapor | **Sampled:** | 05/02/16 |
| **Dilution:** | 60 | **Prepared:** | 05/12/16 |
| **Method:** | VOCs by GCMS EPA TO-15 | **Analyzed:** | 05/12/16 |

**SB-15-11-SV**

**6E03026-04 (Vapor)**

| Analyte | Result | (ug/L) | MRL | Result | (ppmv) | MRL |
|---|---|---|---|---|---|---|
| Acetone | <0.60 | ug/L | 0.010 | <0.25 | ppmv | 0.0042 |
| Allyl chloride | <0.60 | ug/L | 0.010 | <0.19 | ppmv | 0.0032 |
| tert-Amyl Methyl Ether (TAME) | <0.60 | ug/L | 0.010 | <0.14 | ppmv | 0.0024 |
| Benzene | <0.60 | ug/L | 0.010 | <0.19 | ppmv | 0.0031 |
| Benzyl chloride | <0.60 | ug/L | 0.010 | <0.12 | ppmv | 0.0019 |
| Bromodichloromethane | <0.60 | ug/L | 0.010 | <0.090 | ppmv | 0.0015 |
| Bromoform | <0.60 | ug/L | 0.010 | <0.058 | ppmv | 0.00097 |
| Bromomethane | <0.60 | ug/L | 0.010 | <0.15 | ppmv | 0.0026 |
| 1,3-Butadiene | <0.60 | ug/L | 0.010 | <0.27 | ppmv | 0.0045 |
| 2-Butanone (MEK) | <0.60 | ug/L | 0.010 | <0.20 | ppmv | 0.0034 |
| tert-Butyl alcohol (TBA) | <0.60 | ug/L | 0.010 | <0.20 | ppmv | 0.0033 |
| Carbon Disulfide | <0.60 | ug/L | 0.010 | <0.19 | ppmv | 0.0032 |
| Carbon Tetrachloride | <0.60 | ug/L | 0.010 | <0.095 | ppmv | 0.0016 |
| Chlorobenzene | <0.60 | ug/L | 0.010 | <0.13 | ppmv | 0.0022 |
| Chloroethane | <0.60 | ug/L | 0.010 | <0.23 | ppmv | 0.0038 |
| Chloroform | <0.60 | ug/L | 0.010 | <0.12 | ppmv | 0.002 |
| Chloromethane | <0.60 | ug/L | 0.010 | <0.29 | ppmv | 0.0048 |
| Cyclohexane | <0.60 | ug/L | 0.010 | <0.17 | ppmv | 0.0029 |
| Dibromochloromethane | <0.60 | ug/L | 0.010 | <0.070 | ppmv | 0.0012 |
| 1,2-Dibromoethane (EDB) | <0.60 | ug/L | 0.010 | <0.078 | ppmv | 0.0013 |
| 1,2-Dichlorobenzene | <0.60 | ug/L | 0.010 | <0.100 | ppmv | 0.0017 |

**Viorel Vasile**
Operations Manager

# LABORATORY ANALYSIS RESULTS

| | | | |
|---|---|---|---|
| **Client:** | Stantec (TO) | **AA Project No:** | A732178 |
| **Project No:** | 2057123300 | **Date Received:** | 05/03/16 |
| **Project Name:** | Grayson Power Plant Glendale Phase II | **Date Reported:** | 05/18/16 |
| **Matrix:** | Vapor | **Sampled:** | 05/02/16 |
| **Dilution:** | 60 | **Prepared:** | 05/12/16 |
| **Method:** | VOCs by GCMS EPA TO-15 | **Analyzed:** | 05/12/16 |

**SB-15-11-SV**

**6E03026-04 (Vapor)**

| Analyte | Result | (ug/L) | MRL | Result | (ppmv) | MRL |
|---|---|---|---|---|---|---|
| 1,3-Dichlorobenzene | <0.60 | ug/L | 0.010 | <0.100 | ppmv | 0.0017 |
| 1,4-Dichlorobenzene | <0.60 | ug/L | 0.010 | <0.100 | ppmv | 0.0017 |
| Dichlorodifluoromethane (R12) | <0.60 | ug/L | 0.010 | <0.12 | ppmv | 0.002 |
| 1,1-Dichloroethane | <0.60 | ug/L | 0.010 | <0.15 | ppmv | 0.0025 |
| 1,2-Dichloroethane (EDC) | <0.60 | ug/L | 0.010 | <0.15 | ppmv | 0.0025 |
| cis-1,2-Dichloroethylene | <0.60 | ug/L | 0.010 | <0.15 | ppmv | 0.0025 |
| 1,1-Dichloroethylene | **1.1** | ug/L | 0.010 | **0.28** | ppmv | 0.0025 |
| trans-1,2-Dichloroethylene | <0.60 | ug/L | 0.010 | <0.15 | ppmv | 0.0025 |
| 1,2-Dichloropropane | <0.60 | ug/L | 0.010 | <0.13 | ppmv | 0.0022 |
| trans-1,3-Dichloropropylene | <0.60 | ug/L | 0.010 | <0.13 | ppmv | 0.0022 |
| cis-1,3-Dichloropropylene | <0.60 | ug/L | 0.010 | <0.13 | ppmv | 0.0022 |
| Dichlorotetrafluoroethane | <0.60 | ug/L | 0.010 | <0.086 | ppmv | 0.0014 |
| Diisopropyl ether (DIPE) | <0.60 | ug/L | 0.010 | <0.14 | ppmv | 0.0024 |
| 1,4-Dioxane | <0.60 | ug/L | 0.010 | <0.17 | ppmv | 0.0028 |
| Ethanol | <0.60 | ug/L | 0.010 | <0.32 | ppmv | 0.0053 |
| Ethyl Acetate | <0.60 | ug/L | 0.010 | <0.17 | ppmv | 0.0028 |
| Ethylbenzene | <0.60 | ug/L | 0.010 | <0.14 | ppmv | 0.0023 |
| Ethyl-tert-Butyl Ether (ETBE) | <0.60 | ug/L | 0.010 | <0.14 | ppmv | 0.0024 |
| 4-Ethyltoluene | <0.60 | ug/L | 0.010 | <0.12 | ppmv | 0.002 |
| Heptane | <0.60 | ug/L | 0.010 | <0.15 | ppmv | 0.0024 |
| Hexachlorobutadiene | <0.60 | ug/L | 0.010 | <0.056 | ppmv | 0.00094 |

**Viorel Vasile**
Operations Manager

# LABORATORY ANALYSIS RESULTS

| | | | |
|---|---|---|---|
| **Client:** | Stantec (TO) | **AA Project No:** | A732178 |
| **Project No:** | 2057123300 | **Date Received:** | 05/03/16 |
| **Project Name:** | Grayson Power Plant Glendale Phase II | **Date Reported:** | 05/18/16 |
| **Matrix:** | Vapor | **Sampled:** | 05/02/16 |
| **Dilution:** | 60 | **Prepared:** | 05/12/16 |
| **Method:** | VOCs by GCMS EPA TO-15 | **Analyzed:** | 05/12/16 |

**SB-15-11-SV**

**6E03026-04 (Vapor)**

| Analyte | Result | (ug/L) | MRL | Result | (ppmv) | MRL |
|---|---|---|---|---|---|---|
| n-Hexane | <0.60 | ug/L | 0.010 | <0.17 | ppmv | 0.0028 |
| 2-Hexanone (MBK) | <0.60 | ug/L | 0.010 | <0.15 | ppmv | 0.0024 |
| Isopropanol (IPA) | <0.60 | ug/L | 0.010 | <0.24 | ppmv | 0.0041 |
| Methyl-tert-Butyl Ether (MTBE) | <0.60 | ug/L | 0.010 | <0.17 | ppmv | 0.0028 |
| Methylene Chloride | <0.60 | ug/L | 0.010 | <0.17 | ppmv | 0.0029 |
| 4-Methyl-2-pentanone (MIBK) | <0.60 | ug/L | 0.010 | <0.15 | ppmv | 0.0024 |
| Naphthalene | <0.60 | ug/L | 0.010 | <0.11 | ppmv | 0.0019 |
| Propylene | <0.60 | ug/L | 0.010 | <0.35 | ppmv | 0.0058 |
| Styrene | <0.60 | ug/L | 0.010 | <0.14 | ppmv | 0.0023 |
| 1,1,2,2-Tetrachloroethane | <0.60 | ug/L | 0.010 | <0.087 | ppmv | 0.0015 |
| Tetrachloroethylene (PCE) | **0.75** | ug/L | 0.010 | **0.11** | ppmv | 0.0015 |
| Tetrahydrofuran (THF) | <0.60 | ug/L | 0.010 | <0.20 | ppmv | 0.0034 |
| Toluene | <0.60 | ug/L | 0.010 | <0.16 | ppmv | 0.0027 |
| 1,2,4-Trichlorobenzene | <0.60 | ug/L | 0.010 | <0.081 | ppmv | 0.0013 |
| 1,1,2-Trichloroethane | <0.60 | ug/L | 0.010 | <0.11 | ppmv | 0.0018 |
| 1,1,1-Trichloroethane | <0.60 | ug/L | 0.010 | <0.11 | ppmv | 0.0018 |
| Trichloroethylene (TCE) | **6.6** | ug/L | 0.010 | **1.2** | ppmv | 0.0019 |
| Trichlorofluoromethane (R11) | <0.60 | ug/L | 0.010 | <0.11 | ppmv | 0.0018 |
| 1,1,2-Trichloro-1,2,2-trifluoroethane (R113) | <0.60 | ug/L | 0.010 | <0.078 | ppmv | 0.0013 |
| 1,3,5-Trimethylbenzene | <0.60 | ug/L | 0.010 | <0.12 | ppmv | 0.002 |

**Viorel Vasile**
Operations Manager

# LABORATORY ANALYSIS RESULTS

| | | | |
|---|---|---|---|
| **Client:** | Stantec (TO) | **AA Project No:** | A732178 |
| **Project No:** | 2057123300 | **Date Received:** | 05/03/16 |
| **Project Name:** | Grayson Power Plant Glendale Phase II | **Date Reported:** | 05/18/16 |
| **Matrix:** | Vapor | **Sampled:** | 05/02/16 |
| **Dilution:** | 60 | **Prepared:** | 05/12/16 |
| **Method:** | VOCs by GCMS EPA TO-15 | **Analyzed:** | 05/12/16 |

**SB-15-11-SV**

**6E03026-04 (Vapor)**

| Analyte | Result | (ug/L) | MRL | Result | (ppmv) | MRL |
|---|---|---|---|---|---|---|
| 1,2,4-Trimethylbenzene | <0.60 | ug/L | 0.010 | <0.12 | ppmv | 0.002 |
| 2,2,4-Trimethylpentane | <0.60 | ug/L | 0.010 | <0.13 | ppmv | 0.0021 |
| Vinyl acetate | <0.60 | ug/L | 0.010 | <0.17 | ppmv | 0.0028 |
| Vinyl bromide | <0.60 | ug/L | 0.010 | <0.14 | ppmv | 0.0023 |
| Vinyl chloride | <0.60 | ug/L | 0.010 | <0.23 | ppmv | 0.0039 |
| o-Xylene | <0.60 | ug/L | 0.010 | <0.14 | ppmv | 0.0023 |
| m,p-Xylenes | <0.60 | ug/L | 0.010 | <0.14 | ppmv | 0.0023 |
| 1,2,3-Trichloropropane | <0.60 | ug/L | 0.010 | <0.100 | ppmv | 0.0017 |
| sec-Butylbenzene | <0.60 | ug/L | 0.010 | <0.11 | ppmv | 0.0018 |
| Isopropylbenzene | <0.60 | ug/L | 0.010 | <0.12 | ppmv | 0.002 |
| n-Propylbenzene | <0.60 | ug/L | 0.010 | <0.12 | ppmv | 0.002 |
| 4-Isopropyltoluene | <0.60 | ug/L | 0.010 | <0.11 | ppmv | 0.0018 |
| n-Butylbenzene | <0.60 | ug/L | 0.010 | <0.11 | ppmv | 0.0018 |

| Surrogates | %REC | %REC Limits |
|---|---|---|
| 4-Bromofluorobenzene | 106 % | 70-130 |

**Viorel Vasile**
Operations Manager

# LABORATORY ANALYSIS RESULTS

| | | | |
|---|---|---|---|
| **Client:** | Stantec (TO) | **AA Project No:** | A732178 |
| **Project No:** | 2057123300 | **Date Received:** | 05/03/16 |
| **Project Name:** | Grayson Power Plant Glendale Phase II | **Date Reported:** | 05/18/16 |
| **Matrix:** | Vapor | **Sampled:** | 05/02/16 |
| **Dilution:** | 10 | **Prepared:** | 05/11/16 |
| **Method:** | VOCs by GCMS EPA TO-15 | **Analyzed:** | 05/12/16 |

**SB-14-5-SV**

**6E03026-05 (Vapor)**

| Analyte | Result | (ug/L) | MRL | Result | (ppmv) | MRL |
|---|---|---|---|---|---|---|
| Acetone | <0.10 | ug/L | 0.010 | <0.042 | ppmv | 0.0042 |
| Allyl chloride | <0.10 | ug/L | 0.010 | <0.032 | ppmv | 0.0032 |
| tert-Amyl Methyl Ether (TAME) | <0.10 | ug/L | 0.010 | <0.024 | ppmv | 0.0024 |
| Benzene | <0.10 | ug/L | 0.010 | <0.031 | ppmv | 0.0031 |
| Benzyl chloride | <0.10 | ug/L | 0.010 | <0.019 | ppmv | 0.0019 |
| Bromodichloromethane | <0.10 | ug/L | 0.010 | <0.015 | ppmv | 0.0015 |
| Bromoform | <0.10 | ug/L | 0.010 | <0.0097 | ppmv | 0.00097 |
| Bromomethane | <0.10 | ug/L | 0.010 | <0.026 | ppmv | 0.0026 |
| 1,3-Butadiene | <0.10 | ug/L | 0.010 | <0.045 | ppmv | 0.0045 |
| 2-Butanone (MEK) | <0.10 | ug/L | 0.010 | <0.034 | ppmv | 0.0034 |
| tert-Butyl alcohol (TBA) | <0.10 | ug/L | 0.010 | <0.033 | ppmv | 0.0033 |
| Carbon Disulfide | <0.10 | ug/L | 0.010 | <0.032 | ppmv | 0.0032 |
| Carbon Tetrachloride | <0.10 | ug/L | 0.010 | <0.016 | ppmv | 0.0016 |
| Chlorobenzene | <0.10 | ug/L | 0.010 | <0.022 | ppmv | 0.0022 |
| Chloroethane | <0.10 | ug/L | 0.010 | <0.038 | ppmv | 0.0038 |
| Chloroform | <0.10 | ug/L | 0.010 | <0.020 | ppmv | 0.002 |
| Chloromethane | <0.10 | ug/L | 0.010 | <0.048 | ppmv | 0.0048 |
| Cyclohexane | <0.10 | ug/L | 0.010 | <0.029 | ppmv | 0.0029 |
| Dibromochloromethane | <0.10 | ug/L | 0.010 | <0.012 | ppmv | 0.0012 |
| 1,2-Dibromoethane (EDB) | <0.10 | ug/L | 0.010 | <0.013 | ppmv | 0.0013 |
| 1,2-Dichlorobenzene | <0.10 | ug/L | 0.010 | <0.017 | ppmv | 0.0017 |

**Viorel Vasile**
Operations Manager

# LABORATORY ANALYSIS RESULTS

| | | | |
|---|---|---|---|
| **Client:** | Stantec (TO) | **AA Project No:** | A732178 |
| **Project No:** | 2057123300 | **Date Received:** | 05/03/16 |
| **Project Name:** | Grayson Power Plant Glendale Phase II | **Date Reported:** | 05/18/16 |
| **Matrix:** | Vapor | **Sampled:** | 05/02/16 |
| **Dilution:** | 10 | **Prepared:** | 05/11/16 |
| **Method:** | VOCs by GCMS EPA TO-15 | **Analyzed:** | 05/12/16 |

**SB-14-5-SV**

**6E03026-05 (Vapor)**

| Analyte | Result | (ug/L) | MRL | Result | (ppmv) | MRL |
|---|---|---|---|---|---|---|
| 1,3-Dichlorobenzene | <0.10 | ug/L | 0.010 | <0.017 | ppmv | 0.0017 |
| 1,4-Dichlorobenzene | <0.10 | ug/L | 0.010 | <0.017 | ppmv | 0.0017 |
| Dichlorodifluoromethane (R12) | <0.10 | ug/L | 0.010 | <0.020 | ppmv | 0.002 |
| 1,1-Dichloroethane | <0.10 | ug/L | 0.010 | <0.025 | ppmv | 0.0025 |
| 1,2-Dichloroethane (EDC) | <0.10 | ug/L | 0.010 | <0.025 | ppmv | 0.0025 |
| cis-1,2-Dichloroethylene | <0.10 | ug/L | 0.010 | <0.025 | ppmv | 0.0025 |
| 1,1-Dichloroethylene | **0.25** | ug/L | 0.010 | **0.063** | ppmv | 0.0025 |
| trans-1,2-Dichloroethylene | <0.10 | ug/L | 0.010 | <0.025 | ppmv | 0.0025 |
| 1,2-Dichloropropane | <0.10 | ug/L | 0.010 | <0.022 | ppmv | 0.0022 |
| trans-1,3-Dichloropropylene | <0.10 | ug/L | 0.010 | <0.022 | ppmv | 0.0022 |
| cis-1,3-Dichloropropylene | <0.10 | ug/L | 0.010 | <0.022 | ppmv | 0.0022 |
| Dichlorotetrafluoroethane | <0.10 | ug/L | 0.010 | <0.014 | ppmv | 0.0014 |
| Diisopropyl ether (DIPE) | <0.10 | ug/L | 0.010 | <0.024 | ppmv | 0.0024 |
| 1,4-Dioxane | <0.10 | ug/L | 0.010 | <0.028 | ppmv | 0.0028 |
| Ethanol | <0.10 | ug/L | 0.010 | <0.053 | ppmv | 0.0053 |
| Ethyl Acetate | <0.10 | ug/L | 0.010 | <0.028 | ppmv | 0.0028 |
| Ethylbenzene | <0.10 | ug/L | 0.010 | <0.023 | ppmv | 0.0023 |
| Ethyl-tert-Butyl Ether (ETBE) | <0.10 | ug/L | 0.010 | <0.024 | ppmv | 0.0024 |
| 4-Ethyltoluene | <0.10 | ug/L | 0.010 | <0.020 | ppmv | 0.002 |
| Heptane | <0.10 | ug/L | 0.010 | <0.024 | ppmv | 0.0024 |
| Hexachlorobutadiene | <0.10 | ug/L | 0.010 | <0.0094 | ppmv | 0.00094 |

**Viorel Vasile**
Operations Manager

# LABORATORY ANALYSIS RESULTS

| | | | |
|---|---|---|---|
| **Client:** | Stantec (TO) | **AA Project No:** | A732178 |
| **Project No:** | 2057123300 | **Date Received:** | 05/03/16 |
| **Project Name:** | Grayson Power Plant Glendale Phase II | **Date Reported:** | 05/18/16 |
| **Matrix:** | Vapor | **Sampled:** | 05/02/16 |
| **Dilution:** | 10 | **Prepared:** | 05/11/16 |
| **Method:** | VOCs by GCMS EPA TO-15 | **Analyzed:** | 05/12/16 |

**SB-14-5-SV**

**6E03026-05 (Vapor)**

| Analyte | Result | (ug/L) | MRL | Result | (ppmv) | MRL |
|---|---|---|---|---|---|---|
| n-Hexane | <0.10 | ug/L | 0.010 | <0.028 | ppmv | 0.0028 |
| 2-Hexanone (MBK) | <0.10 | ug/L | 0.010 | <0.024 | ppmv | 0.0024 |
| Isopropanol (IPA) | <0.10 | ug/L | 0.010 | <0.041 | ppmv | 0.0041 |
| Methyl-tert-Butyl Ether (MTBE) | <0.10 | ug/L | 0.010 | <0.028 | ppmv | 0.0028 |
| Methylene Chloride | <0.10 | ug/L | 0.010 | <0.029 | ppmv | 0.0029 |
| 4-Methyl-2-pentanone (MIBK) | <0.10 | ug/L | 0.010 | <0.024 | ppmv | 0.0024 |
| Naphthalene | <0.10 | ug/L | 0.010 | <0.019 | ppmv | 0.0019 |
| Propylene | <0.10 | ug/L | 0.010 | <0.058 | ppmv | 0.0058 |
| Styrene | <0.10 | ug/L | 0.010 | <0.023 | ppmv | 0.0023 |
| 1,1,2,2-Tetrachloroethane | <0.10 | ug/L | 0.010 | <0.015 | ppmv | 0.0015 |
| Tetrachloroethylene (PCE) | **0.55** | ug/L | 0.010 | **0.081** | ppmv | 0.0015 |
| Tetrahydrofuran (THF) | <0.10 | ug/L | 0.010 | <0.034 | ppmv | 0.0034 |
| Toluene | <0.10 | ug/L | 0.010 | <0.027 | ppmv | 0.0027 |
| 1,2,4-Trichlorobenzene | <0.10 | ug/L | 0.010 | <0.013 | ppmv | 0.0013 |
| 1,1,2-Trichloroethane | <0.10 | ug/L | 0.010 | <0.018 | ppmv | 0.0018 |
| 1,1,1-Trichloroethane | <0.10 | ug/L | 0.010 | <0.018 | ppmv | 0.0018 |
| Trichloroethylene (TCE) | **2.5** | ug/L | 0.010 | **0.47** | ppmv | 0.0019 |
| Trichlorofluoromethane (R11) | <0.10 | ug/L | 0.010 | <0.018 | ppmv | 0.0018 |
| 1,1,2-Trichloro-1,2,2-trifluoroethane (R113) | <0.10 | ug/L | 0.010 | <0.013 | ppmv | 0.0013 |
| 1,3,5-Trimethylbenzene | <0.10 | ug/L | 0.010 | <0.020 | ppmv | 0.002 |

**Viorel Vasile**
Operations Manager

# LABORATORY ANALYSIS RESULTS

| | | | |
|---|---|---|---|
| **Client:** | Stantec (TO) | **AA Project No:** | A732178 |
| **Project No:** | 2057123300 | **Date Received:** | 05/03/16 |
| **Project Name:** | Grayson Power Plant Glendale Phase II | **Date Reported:** | 05/18/16 |
| **Matrix:** | Vapor | **Sampled:** | 05/02/16 |
| **Dilution:** | 10 | **Prepared:** | 05/11/16 |
| **Method:** | VOCs by GCMS EPA TO-15 | **Analyzed:** | 05/12/16 |

**SB-14-5-SV**

**6E03026-05 (Vapor)**

| Analyte | Result | (ug/L) | MRL | Result | (ppmv) | MRL |
|---|---|---|---|---|---|---|
| 1,2,4-Trimethylbenzene | <0.10 | ug/L | 0.010 | <0.020 | ppmv | 0.002 |
| 2,2,4-Trimethylpentane | <0.10 | ug/L | 0.010 | <0.021 | ppmv | 0.0021 |
| Vinyl acetate | <0.10 | ug/L | 0.010 | <0.028 | ppmv | 0.0028 |
| Vinyl bromide | <0.10 | ug/L | 0.010 | <0.023 | ppmv | 0.0023 |
| Vinyl chloride | <0.10 | ug/L | 0.010 | <0.039 | ppmv | 0.0039 |
| o-Xylene | <0.10 | ug/L | 0.010 | <0.023 | ppmv | 0.0023 |
| m,p-Xylenes | <0.10 | ug/L | 0.010 | <0.023 | ppmv | 0.0023 |
| 1,2,3-Trichloropropane | <0.10 | ug/L | 0.010 | <0.017 | ppmv | 0.0017 |
| sec-Butylbenzene | <0.10 | ug/L | 0.010 | <0.018 | ppmv | 0.0018 |
| Isopropylbenzene | <0.10 | ug/L | 0.010 | <0.020 | ppmv | 0.002 |
| n-Propylbenzene | <0.10 | ug/L | 0.010 | <0.020 | ppmv | 0.002 |
| 4-Isopropyltoluene | <0.10 | ug/L | 0.010 | <0.018 | ppmv | 0.0018 |
| n-Butylbenzene | <0.10 | ug/L | 0.010 | <0.018 | ppmv | 0.0018 |

| Surrogates | %REC | %REC Limits |
|---|---|---|
| 4-Bromofluorobenzene | 99.0 % | 70-130 |

**Viorel Vasile**
Operations Manager

# LABORATORY ANALYSIS RESULTS

| | | | |
|---|---|---|---|
| **Client:** | Stantec (TO) | **AA Project No:** | A732178 |
| **Project No:** | 2057123300 | **Date Received:** | 05/03/16 |
| **Project Name:** | Grayson Power Plant Glendale Phase II | **Date Reported:** | 05/18/16 |
| **Matrix:** | Vapor | **Sampled:** | 05/02/16 |
| **Dilution:** | 40 | **Prepared:** | 05/13/16 |
| **Method:** | VOCs by GCMS EPA TO-15 | **Analyzed:** | 05/13/16 |

**SB-14-15-SV**

**6E03026-06 (Vapor)**

| Analyte | Result | (ug/L) | MRL | Result | (ppmv) | MRL |
|---|---|---|---|---|---|---|
| Acetone | <0.40 | ug/L | 0.010 | <0.17 | ppmv | 0.0042 |
| Allyl chloride | <0.40 | ug/L | 0.010 | <0.13 | ppmv | 0.0032 |
| tert-Amyl Methyl Ether (TAME) | <0.40 | ug/L | 0.010 | <0.096 | ppmv | 0.0024 |
| Benzene | <0.40 | ug/L | 0.010 | <0.13 | ppmv | 0.0031 |
| Benzyl chloride | <0.40 | ug/L | 0.010 | <0.077 | ppmv | 0.0019 |
| Bromodichloromethane | <0.40 | ug/L | 0.010 | <0.060 | ppmv | 0.0015 |
| Bromoform | <0.40 | ug/L | 0.010 | <0.039 | ppmv | 0.00097 |
| Bromomethane | <0.40 | ug/L | 0.010 | <0.10 | ppmv | 0.0026 |
| 1,3-Butadiene | <0.40 | ug/L | 0.010 | <0.18 | ppmv | 0.0045 |
| 2-Butanone (MEK) | <0.40 | ug/L | 0.010 | <0.14 | ppmv | 0.0034 |
| tert-Butyl alcohol (TBA) | <0.40 | ug/L | 0.010 | <0.13 | ppmv | 0.0033 |
| Carbon Disulfide | <0.40 | ug/L | 0.010 | <0.13 | ppmv | 0.0032 |
| Carbon Tetrachloride | <0.40 | ug/L | 0.010 | <0.064 | ppmv | 0.0016 |
| Chlorobenzene | <0.40 | ug/L | 0.010 | <0.087 | ppmv | 0.0022 |
| Chloroethane | <0.40 | ug/L | 0.010 | <0.15 | ppmv | 0.0038 |
| Chloroform | <0.40 | ug/L | 0.010 | <0.082 | ppmv | 0.002 |
| Chloromethane | <0.40 | ug/L | 0.010 | <0.19 | ppmv | 0.0048 |
| Cyclohexane | <0.40 | ug/L | 0.010 | <0.12 | ppmv | 0.0029 |
| Dibromochloromethane | <0.40 | ug/L | 0.010 | <0.047 | ppmv | 0.0012 |
| 1,2-Dibromoethane (EDB) | <0.40 | ug/L | 0.010 | <0.052 | ppmv | 0.0013 |
| 1,2-Dichlorobenzene | <0.40 | ug/L | 0.010 | <0.067 | ppmv | 0.0017 |

**Viorel Vasile**
Operations Manager

# LABORATORY ANALYSIS RESULTS

| | | | |
|---|---|---|---|
| **Client:** | Stantec (TO) | **AA Project No:** | A732178 |
| **Project No:** | 2057123300 | **Date Received:** | 05/03/16 |
| **Project Name:** | Grayson Power Plant Glendale Phase II | **Date Reported:** | 05/18/16 |
| **Matrix:** | Vapor | **Sampled:** | 05/02/16 |
| **Dilution:** | 40 | **Prepared:** | 05/13/16 |
| **Method:** | VOCs by GCMS EPA TO-15 | **Analyzed:** | 05/13/16 |

**SB-14-15-SV**

**6E03026-06 (Vapor)**

| Analyte | Result | (ug/L) | MRL | Result | (ppmv) | MRL |
|---|---|---|---|---|---|---|
| 1,3-Dichlorobenzene | <0.40 | ug/L | 0.010 | <0.067 | ppmv | 0.0017 |
| 1,4-Dichlorobenzene | <0.40 | ug/L | 0.010 | <0.067 | ppmv | 0.0017 |
| Dichlorodifluoromethane (R12) | <0.40 | ug/L | 0.010 | <0.081 | ppmv | 0.002 |
| 1,1-Dichloroethane | <0.40 | ug/L | 0.010 | <0.099 | ppmv | 0.0025 |
| 1,2-Dichloroethane (EDC) | <0.40 | ug/L | 0.010 | <0.099 | ppmv | 0.0025 |
| cis-1,2-Dichloroethylene | <0.40 | ug/L | 0.010 | <0.10 | ppmv | 0.0025 |
| 1,1-Dichloroethylene | **1.1** | ug/L | 0.010 | **0.28** | ppmv | 0.0025 |
| trans-1,2-Dichloroethylene | <0.40 | ug/L | 0.010 | <0.10 | ppmv | 0.0025 |
| 1,2-Dichloropropane | <0.40 | ug/L | 0.010 | <0.087 | ppmv | 0.0022 |
| trans-1,3-Dichloropropylene | <0.40 | ug/L | 0.010 | <0.088 | ppmv | 0.0022 |
| cis-1,3-Dichloropropylene | <0.40 | ug/L | 0.010 | <0.088 | ppmv | 0.0022 |
| Dichlorotetrafluoroethane | <0.40 | ug/L | 0.010 | <0.057 | ppmv | 0.0014 |
| Diisopropyl ether (DIPE) | <0.40 | ug/L | 0.010 | <0.096 | ppmv | 0.0024 |
| 1,4-Dioxane | <0.40 | ug/L | 0.010 | <0.11 | ppmv | 0.0028 |
| Ethanol | <0.40 | ug/L | 0.010 | <0.21 | ppmv | 0.0053 |
| Ethyl Acetate | <0.40 | ug/L | 0.010 | <0.11 | ppmv | 0.0028 |
| Ethylbenzene | <0.40 | ug/L | 0.010 | <0.092 | ppmv | 0.0023 |
| Ethyl-tert-Butyl Ether (ETBE) | <0.40 | ug/L | 0.010 | <0.096 | ppmv | 0.0024 |
| 4-Ethyltoluene | <0.40 | ug/L | 0.010 | <0.081 | ppmv | 0.002 |
| Heptane | <0.40 | ug/L | 0.010 | <0.098 | ppmv | 0.0024 |
| Hexachlorobutadiene | <0.40 | ug/L | 0.010 | <0.038 | ppmv | 0.00094 |

**Viorel Vasile**
Operations Manager

# LABORATORY ANALYSIS RESULTS

| | | | |
|---|---|---|---|
| **Client:** | Stantec (TO) | **AA Project No:** | A732178 |
| **Project No:** | 2057123300 | **Date Received:** | 05/03/16 |
| **Project Name:** | Grayson Power Plant Glendale Phase II | **Date Reported:** | 05/18/16 |
| **Matrix:** | Vapor | **Sampled:** | 05/02/16 |
| **Dilution:** | 40 | **Prepared:** | 05/13/16 |
| **Method:** | VOCs by GCMS EPA TO-15 | **Analyzed:** | 05/13/16 |

**SB-14-15-SV**

**6E03026-06 (Vapor)**

| Analyte | Result | (ug/L) | MRL | Result | (ppmv) | MRL |
|---|---|---|---|---|---|---|
| n-Hexane | <0.40 | ug/L | 0.010 | <0.11 | ppmv | 0.0028 |
| 2-Hexanone (MBK) | <0.40 | ug/L | 0.010 | <0.098 | ppmv | 0.0024 |
| Isopropanol (IPA) | <0.40 | ug/L | 0.010 | <0.16 | ppmv | 0.0041 |
| Methyl-tert-Butyl Ether (MTBE) | <0.40 | ug/L | 0.010 | <0.11 | ppmv | 0.0028 |
| Methylene Chloride | <0.40 | ug/L | 0.010 | <0.12 | ppmv | 0.0029 |
| 4-Methyl-2-pentanone (MIBK) | <0.40 | ug/L | 0.010 | <0.098 | ppmv | 0.0024 |
| Naphthalene | <0.40 | ug/L | 0.010 | <0.076 | ppmv | 0.0019 |
| Propylene | <0.40 | ug/L | 0.010 | <0.23 | ppmv | 0.0058 |
| Styrene | <0.40 | ug/L | 0.010 | <0.094 | ppmv | 0.0023 |
| 1,1,2,2-Tetrachloroethane | <0.40 | ug/L | 0.010 | <0.058 | ppmv | 0.0015 |
| Tetrachloroethylene (PCE) | **1.0** | ug/L | 0.010 | **0.15** | ppmv | 0.0015 |
| Tetrahydrofuran (THF) | <0.40 | ug/L | 0.010 | <0.14 | ppmv | 0.0034 |
| Toluene | <0.40 | ug/L | 0.010 | <0.11 | ppmv | 0.0027 |
| 1,2,4-Trichlorobenzene | <0.40 | ug/L | 0.010 | <0.054 | ppmv | 0.0013 |
| 1,1,2-Trichloroethane | <0.40 | ug/L | 0.010 | <0.073 | ppmv | 0.0018 |
| 1,1,1-Trichloroethane | <0.40 | ug/L | 0.010 | <0.073 | ppmv | 0.0018 |
| Trichloroethylene (TCE) | **7.2** | ug/L | 0.010 | **1.3** | ppmv | 0.0019 |
| Trichlorofluoromethane (R11) | <0.40 | ug/L | 0.010 | <0.071 | ppmv | 0.0018 |
| 1,1,2-Trichloro-1,2,2-trifluoroethane (R113) | <0.40 | ug/L | 0.010 | <0.052 | ppmv | 0.0013 |
| 1,3,5-Trimethylbenzene | <0.40 | ug/L | 0.010 | <0.081 | ppmv | 0.002 |

**Viorel Vasile**
Operations Manager

# LABORATORY ANALYSIS RESULTS

| | | | |
|---|---|---|---|
| **Client:** | Stantec (TO) | **AA Project No:** | A732178 |
| **Project No:** | 2057123300 | **Date Received:** | 05/03/16 |
| **Project Name:** | Grayson Power Plant Glendale Phase II | **Date Reported:** | 05/18/16 |
| **Matrix:** | Vapor | **Sampled:** | 05/02/16 |
| **Dilution:** | 40 | **Prepared:** | 05/13/16 |
| **Method:** | VOCs by GCMS EPA TO-15 | **Analyzed:** | 05/13/16 |

**SB-14-15-SV**

**6E03026-06 (Vapor)**

| Analyte | Result | (ug/L) | MRL | Result | (ppmv) | MRL |
|---|---|---|---|---|---|---|
| 1,2,4-Trimethylbenzene | <0.40 | ug/L | 0.010 | <0.081 | ppmv | 0.002 |
| 2,2,4-Trimethylpentane | <0.40 | ug/L | 0.010 | <0.086 | ppmv | 0.0021 |
| Vinyl acetate | <0.40 | ug/L | 0.010 | <0.11 | ppmv | 0.0028 |
| Vinyl bromide | <0.40 | ug/L | 0.010 | <0.091 | ppmv | 0.0023 |
| Vinyl chloride | <0.40 | ug/L | 0.010 | <0.16 | ppmv | 0.0039 |
| o-Xylene | <0.40 | ug/L | 0.010 | <0.092 | ppmv | 0.0023 |
| m,p-Xylenes | <0.40 | ug/L | 0.010 | <0.092 | ppmv | 0.0023 |
| 1,2,3-Trichloropropane | <0.40 | ug/L | 0.010 | <0.066 | ppmv | 0.0017 |
| sec-Butylbenzene | <0.40 | ug/L | 0.010 | <0.073 | ppmv | 0.0018 |
| Isopropylbenzene | <0.40 | ug/L | 0.010 | <0.081 | ppmv | 0.002 |
| n-Propylbenzene | <0.40 | ug/L | 0.010 | <0.081 | ppmv | 0.002 |
| 4-Isopropyltoluene | <0.40 | ug/L | 0.010 | <0.073 | ppmv | 0.0018 |
| n-Butylbenzene | <0.40 | ug/L | 0.010 | <0.073 | ppmv | 0.0018 |

| Surrogates | %REC | %REC Limits |
|---|---|---|
| 4-Bromofluorobenzene | 107 % | 70-130 |

**Viorel Vasile**
Operations Manager

# LABORATORY ANALYSIS RESULTS

| | | | |
|---|---|---|---|
| **Client:** | Stantec (TO) | **AA Project No:** | A732178 |
| **Project No:** | 2057123300 | **Date Received:** | 05/03/16 |
| **Project Name:** | Grayson Power Plant Glendale Phase II | **Date Reported:** | 05/18/16 |
| **Matrix:** | Vapor | **Sampled:** | 05/02/16 |
| **Dilution:** | 2 | **Prepared:** | 05/13/16 |
| **Method:** | VOCs by GCMS EPA TO-15 | **Analyzed:** | 05/13/16 |

**SB-12-5-SV**

**6E03026-07 (Vapor)**

| Analyte | Result | (ug/L) | MRL | Result | (ppmv) | MRL |
|---|---|---|---|---|---|---|
| Acetone | <0.020 | ug/L | 0.010 | <0.0084 | ppmv | 0.0042 |
| Allyl chloride | <0.020 | ug/L | 0.010 | <0.0064 | ppmv | 0.0032 |
| tert-Amyl Methyl Ether (TAME) | <0.020 | ug/L | 0.010 | <0.0048 | ppmv | 0.0024 |
| Benzene | <0.020 | ug/L | 0.010 | <0.0063 | ppmv | 0.0031 |
| Benzyl chloride | <0.020 | ug/L | 0.010 | <0.0039 | ppmv | 0.0019 |
| Bromodichloromethane | <0.020 | ug/L | 0.010 | <0.003 | ppmv | 0.0015 |
| Bromoform | <0.020 | ug/L | 0.010 | <0.0019 | ppmv | 0.00097 |
| Bromomethane | <0.020 | ug/L | 0.010 | <0.0052 | ppmv | 0.0026 |
| 1,3-Butadiene | <0.020 | ug/L | 0.010 | <0.009 | ppmv | 0.0045 |
| 2-Butanone (MEK) | <0.020 | ug/L | 0.010 | <0.0068 | ppmv | 0.0034 |
| tert-Butyl alcohol (TBA) | <0.020 | ug/L | 0.010 | <0.0066 | ppmv | 0.0033 |
| Carbon Disulfide | <0.020 | ug/L | 0.010 | <0.0064 | ppmv | 0.0032 |
| Carbon Tetrachloride | <0.020 | ug/L | 0.010 | <0.0032 | ppmv | 0.0016 |
| Chlorobenzene | <0.020 | ug/L | 0.010 | <0.0043 | ppmv | 0.0022 |
| Chloroethane | <0.020 | ug/L | 0.010 | <0.0076 | ppmv | 0.0038 |
| Chloroform | <0.020 | ug/L | 0.010 | <0.0041 | ppmv | 0.002 |
| Chloromethane | <0.020 | ug/L | 0.010 | <0.0097 | ppmv | 0.0048 |
| Cyclohexane | <0.020 | ug/L | 0.010 | <0.0058 | ppmv | 0.0029 |
| Dibromochloromethane | <0.020 | ug/L | 0.010 | <0.0023 | ppmv | 0.0012 |
| 1,2-Dibromoethane (EDB) | <0.020 | ug/L | 0.010 | <0.0026 | ppmv | 0.0013 |
| 1,2-Dichlorobenzene | <0.020 | ug/L | 0.010 | <0.0033 | ppmv | 0.0017 |

**Viorel Vasile**
Operations Manager

# LABORATORY ANALYSIS RESULTS

| | | | |
|---|---|---|---|
| **Client:** | Stantec (TO) | **AA Project No:** | A732178 |
| **Project No:** | 2057123300 | **Date Received:** | 05/03/16 |
| **Project Name:** | Grayson Power Plant Glendale Phase II | **Date Reported:** | 05/18/16 |
| **Matrix:** | Vapor | **Sampled:** | 05/02/16 |
| **Dilution:** | 2 | **Prepared:** | 05/13/16 |
| **Method:** | VOCs by GCMS EPA TO-15 | **Analyzed:** | 05/13/16 |

**SB-12-5-SV**

**6E03026-07 (Vapor)**

| Analyte | Result | (ug/L) | MRL | Result | (ppmv) | MRL |
|---|---|---|---|---|---|---|
| 1,3-Dichlorobenzene | <0.020 | ug/L | 0.010 | <0.0033 | ppmv | 0.0017 |
| 1,4-Dichlorobenzene | <0.020 | ug/L | 0.010 | <0.0033 | ppmv | 0.0017 |
| Dichlorodifluoromethane (R12) | <0.020 | ug/L | 0.010 | <0.004 | ppmv | 0.002 |
| 1,1-Dichloroethane | <0.020 | ug/L | 0.010 | <0.0049 | ppmv | 0.0025 |
| 1,2-Dichloroethane (EDC) | <0.020 | ug/L | 0.010 | <0.0049 | ppmv | 0.0025 |
| cis-1,2-Dichloroethylene | <0.020 | ug/L | 0.010 | <0.005 | ppmv | 0.0025 |
| 1,1-Dichloroethylene | <0.020 | ug/L | 0.010 | <0.005 | ppmv | 0.0025 |
| trans-1,2-Dichloroethylene | <0.020 | ug/L | 0.010 | <0.005 | ppmv | 0.0025 |
| 1,2-Dichloropropane | <0.020 | ug/L | 0.010 | <0.0043 | ppmv | 0.0022 |
| trans-1,3-Dichloropropylene | <0.020 | ug/L | 0.010 | <0.0044 | ppmv | 0.0022 |
| cis-1,3-Dichloropropylene | <0.020 | ug/L | 0.010 | <0.0044 | ppmv | 0.0022 |
| Dichlorotetrafluoroethane | <0.020 | ug/L | 0.010 | <0.0029 | ppmv | 0.0014 |
| Diisopropyl ether (DIPE) | <0.020 | ug/L | 0.010 | <0.0048 | ppmv | 0.0024 |
| 1,4-Dioxane | <0.020 | ug/L | 0.010 | <0.0055 | ppmv | 0.0028 |
| Ethanol | <0.020 | ug/L | 0.010 | <0.011 | ppmv | 0.0053 |
| Ethyl Acetate | <0.020 | ug/L | 0.010 | <0.0055 | ppmv | 0.0028 |
| Ethylbenzene | <0.020 | ug/L | 0.010 | <0.0046 | ppmv | 0.0023 |
| Ethyl-tert-Butyl Ether (ETBE) | <0.020 | ug/L | 0.010 | <0.0048 | ppmv | 0.0024 |
| 4-Ethyltoluene | <0.020 | ug/L | 0.010 | <0.0041 | ppmv | 0.002 |
| Heptane | <0.020 | ug/L | 0.010 | <0.0049 | ppmv | 0.0024 |
| Hexachlorobutadiene | <0.020 | ug/L | 0.010 | <0.0019 | ppmv | 0.00094 |

**Viorel Vasile**
Operations Manager

# LABORATORY ANALYSIS RESULTS

| | | | |
|---|---|---|---|
| **Client:** | Stantec (TO) | **AA Project No:** | A732178 |
| **Project No:** | 2057123300 | **Date Received:** | 05/03/16 |
| **Project Name:** | Grayson Power Plant Glendale Phase II | **Date Reported:** | 05/18/16 |
| **Matrix:** | Vapor | **Sampled:** | 05/02/16 |
| **Dilution:** | 2 | **Prepared:** | 05/13/16 |
| **Method:** | VOCs by GCMS EPA TO-15 | **Analyzed:** | 05/13/16 |

**SB-12-5-SV**

**6E03026-07 (Vapor)**

| Analyte | Result | (ug/L) | MRL | Result | (ppmv) | MRL |
|---|---|---|---|---|---|---|
| n-Hexane | <0.020 | ug/L | 0.010 | <0.0057 | ppmv | 0.0028 |
| 2-Hexanone (MBK) | <0.020 | ug/L | 0.010 | <0.0049 | ppmv | 0.0024 |
| Isopropanol (IPA) | <0.020 | ug/L | 0.010 | <0.0081 | ppmv | 0.0041 |
| Methyl-tert-Butyl Ether (MTBE) | <0.020 | ug/L | 0.010 | <0.0055 | ppmv | 0.0028 |
| Methylene Chloride | <0.020 | ug/L | 0.010 | <0.0058 | ppmv | 0.0029 |
| 4-Methyl-2-pentanone (MIBK) | <0.020 | ug/L | 0.010 | <0.0049 | ppmv | 0.0024 |
| Naphthalene | <0.020 | ug/L | 0.010 | <0.0038 | ppmv | 0.0019 |
| Propylene | <0.020 | ug/L | 0.010 | <0.012 | ppmv | 0.0058 |
| Styrene | <0.020 | ug/L | 0.010 | <0.0047 | ppmv | 0.0023 |
| 1,1,2,2-Tetrachloroethane | <0.020 | ug/L | 0.010 | <0.0029 | ppmv | 0.0015 |
| Tetrachloroethylene (PCE) | **0.61** | ug/L | 0.010 | **0.090** | ppmv | 0.0015 |
| Tetrahydrofuran (THF) | <0.020 | ug/L | 0.010 | <0.0068 | ppmv | 0.0034 |
| Toluene | **0.021** | ug/L | 0.010 | **0.0056** | ppmv | 0.0027 |
| 1,2,4-Trichlorobenzene | <0.020 | ug/L | 0.010 | <0.0027 | ppmv | 0.0013 |
| 1,1,2-Trichloroethane | <0.020 | ug/L | 0.010 | <0.0037 | ppmv | 0.0018 |
| 1,1,1-Trichloroethane | <0.020 | ug/L | 0.010 | <0.0037 | ppmv | 0.0018 |
| Trichloroethylene (TCE) | <0.020 | ug/L | 0.010 | <0.0037 | ppmv | 0.0019 |
| Trichlorofluoromethane (R11) | <0.020 | ug/L | 0.010 | <0.0036 | ppmv | 0.0018 |
| 1,1,2-Trichloro-1,2,2-trifluoroethane (R113) | <0.020 | ug/L | 0.010 | <0.0026 | ppmv | 0.0013 |
| 1,3,5-Trimethylbenzene | <0.020 | ug/L | 0.010 | <0.0041 | ppmv | 0.002 |

**Viorel Vasile**
Operations Manager

# LABORATORY ANALYSIS RESULTS

| | | | |
|---|---|---|---|
| **Client:** | Stantec (TO) | **AA Project No:** | A732178 |
| **Project No:** | 2057123300 | **Date Received:** | 05/03/16 |
| **Project Name:** | Grayson Power Plant Glendale Phase II | **Date Reported:** | 05/18/16 |
| **Matrix:** | Vapor | **Sampled:** | 05/02/16 |
| **Dilution:** | 2 | **Prepared:** | 05/13/16 |
| **Method:** | VOCs by GCMS EPA TO-15 | **Analyzed:** | 05/13/16 |

**SB-12-5-SV**

**6E03026-07 (Vapor)**

| Analyte | Result | (ug/L) | MRL | Result | (ppmv) | MRL |
|---|---|---|---|---|---|---|
| 1,2,4-Trimethylbenzene | <0.020 | ug/L | 0.010 | <0.0041 | ppmv | 0.002 |
| 2,2,4-Trimethylpentane | <0.020 | ug/L | 0.010 | <0.0043 | ppmv | 0.0021 |
| Vinyl acetate | <0.020 | ug/L | 0.010 | <0.0057 | ppmv | 0.0028 |
| Vinyl bromide | <0.020 | ug/L | 0.010 | <0.0046 | ppmv | 0.0023 |
| Vinyl chloride | <0.020 | ug/L | 0.010 | <0.0078 | ppmv | 0.0039 |
| o-Xylene | <0.020 | ug/L | 0.010 | <0.0046 | ppmv | 0.0023 |
| m,p-Xylenes | **0.021** | ug/L | 0.010 | **0.0048** | ppmv | 0.0023 |
| 1,2,3-Trichloropropane | <0.020 | ug/L | 0.010 | <0.0033 | ppmv | 0.0017 |
| sec-Butylbenzene | <0.020 | ug/L | 0.010 | <0.0036 | ppmv | 0.0018 |
| Isopropylbenzene | <0.020 | ug/L | 0.010 | <0.0041 | ppmv | 0.002 |
| n-Propylbenzene | <0.020 | ug/L | 0.010 | <0.0041 | ppmv | 0.002 |
| 4-Isopropyltoluene | <0.020 | ug/L | 0.010 | <0.0036 | ppmv | 0.0018 |
| n-Butylbenzene | <0.020 | ug/L | 0.010 | <0.0036 | ppmv | 0.0018 |

| Surrogates | %REC | %REC Limits |
|---|---|---|
| 4-Bromofluorobenzene | 105 % | 70-130 |

**Viorel Vasile**
Operations Manager

# LABORATORY ANALYSIS RESULTS

| | | | |
|---|---|---|---|
| **Client:** | Stantec (TO) | **AA Project No:** | A732178 |
| **Project No:** | 2057123300 | **Date Received:** | 05/03/16 |
| **Project Name:** | Grayson Power Plant Glendale Phase II | **Date Reported:** | 05/18/16 |
| **Matrix:** | Vapor | **Sampled:** | 05/02/16 |
| **Dilution:** | 4 | **Prepared:** | 05/13/16 |
| **Method:** | VOCs by GCMS EPA TO-15 | **Analyzed:** | 05/13/16 |

**SB-12-15-SV**

**6E03026-08 (Vapor)**

| Analyte | Result | (ug/L) | MRL | Result | (ppmv) | MRL |
|---|---|---|---|---|---|---|
| Acetone | <0.040 | ug/L | 0.010 | <0.017 | ppmv | 0.0042 |
| Allyl chloride | <0.040 | ug/L | 0.010 | <0.013 | ppmv | 0.0032 |
| tert-Amyl Methyl Ether (TAME) | <0.040 | ug/L | 0.010 | <0.0096 | ppmv | 0.0024 |
| Benzene | <0.040 | ug/L | 0.010 | <0.013 | ppmv | 0.0031 |
| Benzyl chloride | <0.040 | ug/L | 0.010 | <0.0077 | ppmv | 0.0019 |
| Bromodichloromethane | <0.040 | ug/L | 0.010 | <0.006 | ppmv | 0.0015 |
| Bromoform | <0.040 | ug/L | 0.010 | <0.0039 | ppmv | 0.00097 |
| Bromomethane | <0.040 | ug/L | 0.010 | <0.010 | ppmv | 0.0026 |
| 1,3-Butadiene | <0.040 | ug/L | 0.010 | <0.018 | ppmv | 0.0045 |
| 2-Butanone (MEK) | <0.040 | ug/L | 0.010 | <0.014 | ppmv | 0.0034 |
| tert-Butyl alcohol (TBA) | <0.040 | ug/L | 0.010 | <0.013 | ppmv | 0.0033 |
| Carbon Disulfide | <0.040 | ug/L | 0.010 | <0.013 | ppmv | 0.0032 |
| Carbon Tetrachloride | <0.040 | ug/L | 0.010 | <0.0064 | ppmv | 0.0016 |
| Chlorobenzene | <0.040 | ug/L | 0.010 | <0.0087 | ppmv | 0.0022 |
| Chloroethane | <0.040 | ug/L | 0.010 | <0.015 | ppmv | 0.0038 |
| Chloroform | <0.040 | ug/L | 0.010 | <0.0082 | ppmv | 0.002 |
| Chloromethane | <0.040 | ug/L | 0.010 | <0.019 | ppmv | 0.0048 |
| Cyclohexane | <0.040 | ug/L | 0.010 | <0.012 | ppmv | 0.0029 |
| Dibromochloromethane | <0.040 | ug/L | 0.010 | <0.0047 | ppmv | 0.0012 |
| 1,2-Dibromoethane (EDB) | <0.040 | ug/L | 0.010 | <0.0052 | ppmv | 0.0013 |
| 1,2-Dichlorobenzene | <0.040 | ug/L | 0.010 | <0.0067 | ppmv | 0.0017 |

**Viorel Vasile**
Operations Manager

# LABORATORY ANALYSIS RESULTS

| | | | |
|---|---|---|---|
| **Client:** | Stantec (TO) | **AA Project No:** | A732178 |
| **Project No:** | 2057123300 | **Date Received:** | 05/03/16 |
| **Project Name:** | Grayson Power Plant Glendale Phase II | **Date Reported:** | 05/18/16 |
| **Matrix:** | Vapor | **Sampled:** | 05/02/16 |
| **Dilution:** | 4 | **Prepared:** | 05/13/16 |
| **Method:** | VOCs by GCMS EPA TO-15 | **Analyzed:** | 05/13/16 |

**SB-12-15-SV**

**6E03026-08 (Vapor)**

| Analyte | Result | (ug/L) | MRL | Result | (ppmv) | MRL |
|---|---|---|---|---|---|---|
| 1,3-Dichlorobenzene | <0.040 | ug/L | 0.010 | <0.0067 | ppmv | 0.0017 |
| 1,4-Dichlorobenzene | <0.040 | ug/L | 0.010 | <0.0067 | ppmv | 0.0017 |
| Dichlorodifluoromethane (R12) | <0.040 | ug/L | 0.010 | <0.0081 | ppmv | 0.002 |
| 1,1-Dichloroethane | <0.040 | ug/L | 0.010 | <0.0099 | ppmv | 0.0025 |
| 1,2-Dichloroethane (EDC) | <0.040 | ug/L | 0.010 | <0.0099 | ppmv | 0.0025 |
| cis-1,2-Dichloroethylene | <0.040 | ug/L | 0.010 | <0.010 | ppmv | 0.0025 |
| 1,1-Dichloroethylene | **0.053** | ug/L | 0.010 | **0.013** | ppmv | 0.0025 |
| trans-1,2-Dichloroethylene | <0.040 | ug/L | 0.010 | <0.010 | ppmv | 0.0025 |
| 1,2-Dichloropropane | <0.040 | ug/L | 0.010 | <0.0087 | ppmv | 0.0022 |
| trans-1,3-Dichloropropylene | <0.040 | ug/L | 0.010 | <0.0088 | ppmv | 0.0022 |
| cis-1,3-Dichloropropylene | <0.040 | ug/L | 0.010 | <0.0088 | ppmv | 0.0022 |
| Dichlorotetrafluoroethane | <0.040 | ug/L | 0.010 | <0.0057 | ppmv | 0.0014 |
| Diisopropyl ether (DIPE) | <0.040 | ug/L | 0.010 | <0.0096 | ppmv | 0.0024 |
| 1,4-Dioxane | <0.040 | ug/L | 0.010 | <0.011 | ppmv | 0.0028 |
| Ethanol | <0.040 | ug/L | 0.010 | <0.021 | ppmv | 0.0053 |
| Ethyl Acetate | <0.040 | ug/L | 0.010 | <0.011 | ppmv | 0.0028 |
| Ethylbenzene | <0.040 | ug/L | 0.010 | <0.0092 | ppmv | 0.0023 |
| Ethyl-tert-Butyl Ether (ETBE) | <0.040 | ug/L | 0.010 | <0.0096 | ppmv | 0.0024 |
| 4-Ethyltoluene | <0.040 | ug/L | 0.010 | <0.0081 | ppmv | 0.002 |
| Heptane | <0.040 | ug/L | 0.010 | <0.0098 | ppmv | 0.0024 |
| Hexachlorobutadiene | <0.040 | ug/L | 0.010 | <0.0038 | ppmv | 0.00094 |

**Viorel Vasile**
Operations Manager

# LABORATORY ANALYSIS RESULTS

| | | | |
|---|---|---|---|
| **Client:** | Stantec (TO) | **AA Project No:** | A732178 |
| **Project No:** | 2057123300 | **Date Received:** | 05/03/16 |
| **Project Name:** | Grayson Power Plant Glendale Phase II | **Date Reported:** | 05/18/16 |
| **Matrix:** | Vapor | **Sampled:** | 05/02/16 |
| **Dilution:** | 4 | **Prepared:** | 05/13/16 |
| **Method:** | VOCs by GCMS EPA TO-15 | **Analyzed:** | 05/13/16 |

**SB-12-15-SV**

**6E03026-08 (Vapor)**

| Analyte | Result | (ug/L) | MRL | Result | (ppmv) | MRL |
|---|---|---|---|---|---|---|
| n-Hexane | <0.040 | ug/L | 0.010 | <0.011 | ppmv | 0.0028 |
| 2-Hexanone (MBK) | <0.040 | ug/L | 0.010 | <0.0098 | ppmv | 0.0024 |
| Isopropanol (IPA) | <0.040 | ug/L | 0.010 | <0.016 | ppmv | 0.0041 |
| Methyl-tert-Butyl Ether (MTBE) | <0.040 | ug/L | 0.010 | <0.011 | ppmv | 0.0028 |
| Methylene Chloride | <0.040 | ug/L | 0.010 | <0.012 | ppmv | 0.0029 |
| 4-Methyl-2-pentanone (MIBK) | <0.040 | ug/L | 0.010 | <0.0098 | ppmv | 0.0024 |
| Naphthalene | <0.040 | ug/L | 0.010 | <0.0076 | ppmv | 0.0019 |
| Propylene | <0.040 | ug/L | 0.010 | <0.023 | ppmv | 0.0058 |
| Styrene | <0.040 | ug/L | 0.010 | <0.0094 | ppmv | 0.0023 |
| 1,1,2,2-Tetrachloroethane | <0.040 | ug/L | 0.010 | <0.0058 | ppmv | 0.0015 |
| Tetrachloroethylene (PCE) | **1.2** | ug/L | 0.010 | **0.18** | ppmv | 0.0015 |
| Tetrahydrofuran (THF) | <0.040 | ug/L | 0.010 | <0.014 | ppmv | 0.0034 |
| Toluene | <0.040 | ug/L | 0.010 | <0.011 | ppmv | 0.0027 |
| 1,2,4-Trichlorobenzene | <0.040 | ug/L | 0.010 | <0.0054 | ppmv | 0.0013 |
| 1,1,2-Trichloroethane | <0.040 | ug/L | 0.010 | <0.0073 | ppmv | 0.0018 |
| 1,1,1-Trichloroethane | <0.040 | ug/L | 0.010 | <0.0073 | ppmv | 0.0018 |
| Trichloroethylene (TCE) | **0.32** | ug/L | 0.010 | **0.060** | ppmv | 0.0019 |
| Trichlorofluoromethane (R11) | <0.040 | ug/L | 0.010 | <0.0071 | ppmv | 0.0018 |
| 1,1,2-Trichloro-1,2,2-trifluoroethane (R113) | <0.040 | ug/L | 0.010 | <0.0052 | ppmv | 0.0013 |
| 1,3,5-Trimethylbenzene | <0.040 | ug/L | 0.010 | <0.0081 | ppmv | 0.002 |

**Viorel Vasile**
Operations Manager

# LABORATORY ANALYSIS RESULTS

| | | | |
|---|---|---|---|
| **Client:** | Stantec (TO) | **AA Project No:** | A732178 |
| **Project No:** | 2057123300 | **Date Received:** | 05/03/16 |
| **Project Name:** | Grayson Power Plant Glendale Phase II | **Date Reported:** | 05/18/16 |
| **Matrix:** | Vapor | **Sampled:** | 05/02/16 |
| **Dilution:** | 4 | **Prepared:** | 05/13/16 |
| **Method:** | VOCs by GCMS EPA TO-15 | **Analyzed:** | 05/13/16 |

**SB-12-15-SV**

**6E03026-08 (Vapor)**

| Analyte | Result | (ug/L) | MRL | Result | (ppmv) | MRL |
|---|---|---|---|---|---|---|
| 1,2,4-Trimethylbenzene | <0.040 | ug/L | 0.010 | <0.0081 | ppmv | 0.002 |
| 2,2,4-Trimethylpentane | <0.040 | ug/L | 0.010 | <0.0086 | ppmv | 0.0021 |
| Vinyl acetate | <0.040 | ug/L | 0.010 | <0.011 | ppmv | 0.0028 |
| Vinyl bromide | <0.040 | ug/L | 0.010 | <0.0091 | ppmv | 0.0023 |
| Vinyl chloride | <0.040 | ug/L | 0.010 | <0.016 | ppmv | 0.0039 |
| o-Xylene | <0.040 | ug/L | 0.010 | <0.0092 | ppmv | 0.0023 |
| m,p-Xylenes | <0.040 | ug/L | 0.010 | <0.0092 | ppmv | 0.0023 |
| 1,2,3-Trichloropropane | <0.040 | ug/L | 0.010 | <0.0066 | ppmv | 0.0017 |
| sec-Butylbenzene | <0.040 | ug/L | 0.010 | <0.0073 | ppmv | 0.0018 |
| Isopropylbenzene | <0.040 | ug/L | 0.010 | <0.0081 | ppmv | 0.002 |
| n-Propylbenzene | <0.040 | ug/L | 0.010 | <0.0081 | ppmv | 0.002 |
| 4-Isopropyltoluene | <0.040 | ug/L | 0.010 | <0.0073 | ppmv | 0.0018 |
| n-Butylbenzene | <0.040 | ug/L | 0.010 | <0.0073 | ppmv | 0.0018 |

| Surrogates | %REC | %REC Limits |
|---|---|---|
| 4-Bromofluorobenzene | 105 % | 70-130 |

**Viorel Vasile**
Operations Manager

# LABORATORY ANALYSIS RESULTS

| | | | |
|---|---|---|---|
| **Client:** | Stantec (TO) | **AA Project No:** | A732178 |
| **Project No:** | 2057123300 | **Date Received:** | 05/03/16 |
| **Project Name:** | Grayson Power Plant Glendale Phase II | **Date Reported:** | 05/18/16 |
| **Matrix:** | Vapor | **Sampled:** | 05/02/16 |
| **Dilution:** | 60 | **Prepared:** | 05/13/16 |
| **Method:** | VOCs by GCMS EPA TO-15 | **Analyzed:** | 05/13/16 |

**SB-12-30-SV**

**6E03026-09 (Vapor)**

| Analyte | Result | (ug/L) | MRL | Result | (ppmv) | MRL |
|---|---|---|---|---|---|---|
| Acetone | <0.60 | ug/L | 0.010 | <0.25 | ppmv | 0.0042 |
| Allyl chloride | <0.60 | ug/L | 0.010 | <0.19 | ppmv | 0.0032 |
| tert-Amyl Methyl Ether (TAME) | <0.60 | ug/L | 0.010 | <0.14 | ppmv | 0.0024 |
| Benzene | <0.60 | ug/L | 0.010 | <0.19 | ppmv | 0.0031 |
| Benzyl chloride | <0.60 | ug/L | 0.010 | <0.12 | ppmv | 0.0019 |
| Bromodichloromethane | <0.60 | ug/L | 0.010 | <0.090 | ppmv | 0.0015 |
| Bromoform | <0.60 | ug/L | 0.010 | <0.058 | ppmv | 0.00097 |
| Bromomethane | <0.60 | ug/L | 0.010 | <0.15 | ppmv | 0.0026 |
| 1,3-Butadiene | <0.60 | ug/L | 0.010 | <0.27 | ppmv | 0.0045 |
| 2-Butanone (MEK) | <0.60 | ug/L | 0.010 | <0.20 | ppmv | 0.0034 |
| tert-Butyl alcohol (TBA) | <0.60 | ug/L | 0.010 | <0.20 | ppmv | 0.0033 |
| Carbon Disulfide | <0.60 | ug/L | 0.010 | <0.19 | ppmv | 0.0032 |
| Carbon Tetrachloride | <0.60 | ug/L | 0.010 | <0.095 | ppmv | 0.0016 |
| Chlorobenzene | <0.60 | ug/L | 0.010 | <0.13 | ppmv | 0.0022 |
| Chloroethane | <0.60 | ug/L | 0.010 | <0.23 | ppmv | 0.0038 |
| Chloroform | <0.60 | ug/L | 0.010 | <0.12 | ppmv | 0.002 |
| Chloromethane | <0.60 | ug/L | 0.010 | <0.29 | ppmv | 0.0048 |
| Cyclohexane | <0.60 | ug/L | 0.010 | <0.17 | ppmv | 0.0029 |
| Dibromochloromethane | <0.60 | ug/L | 0.010 | <0.070 | ppmv | 0.0012 |
| 1,2-Dibromoethane (EDB) | <0.60 | ug/L | 0.010 | <0.078 | ppmv | 0.0013 |
| 1,2-Dichlorobenzene | <0.60 | ug/L | 0.010 | <0.100 | ppmv | 0.0017 |

**Viorel Vasile**
Operations Manager

# LABORATORY ANALYSIS RESULTS

| | | | |
|---|---|---|---|
| **Client:** | Stantec (TO) | **AA Project No:** | A732178 |
| **Project No:** | 2057123300 | **Date Received:** | 05/03/16 |
| **Project Name:** | Grayson Power Plant Glendale Phase II | **Date Reported:** | 05/18/16 |
| **Matrix:** | Vapor | **Sampled:** | 05/02/16 |
| **Dilution:** | 60 | **Prepared:** | 05/13/16 |
| **Method:** | VOCs by GCMS EPA TO-15 | **Analyzed:** | 05/13/16 |

**SB-12-30-SV**

**6E03026-09 (Vapor)**

| Analyte | Result | (ug/L) | MRL | Result | (ppmv) | MRL |
|---|---|---|---|---|---|---|
| 1,3-Dichlorobenzene | <0.60 | ug/L | 0.010 | <0.100 | ppmv | 0.0017 |
| 1,4-Dichlorobenzene | <0.60 | ug/L | 0.010 | <0.100 | ppmv | 0.0017 |
| Dichlorodifluoromethane (R12) | <0.60 | ug/L | 0.010 | <0.12 | ppmv | 0.002 |
| 1,1-Dichloroethane | <0.60 | ug/L | 0.010 | <0.15 | ppmv | 0.0025 |
| 1,2-Dichloroethane (EDC) | <0.60 | ug/L | 0.010 | <0.15 | ppmv | 0.0025 |
| cis-1,2-Dichloroethylene | <0.60 | ug/L | 0.010 | <0.15 | ppmv | 0.0025 |
| 1,1-Dichloroethylene | **2.4** | ug/L | 0.010 | **0.61** | ppmv | 0.0025 |
| trans-1,2-Dichloroethylene | <0.60 | ug/L | 0.010 | <0.15 | ppmv | 0.0025 |
| 1,2-Dichloropropane | <0.60 | ug/L | 0.010 | <0.13 | ppmv | 0.0022 |
| trans-1,3-Dichloropropylene | <0.60 | ug/L | 0.010 | <0.13 | ppmv | 0.0022 |
| cis-1,3-Dichloropropylene | <0.60 | ug/L | 0.010 | <0.13 | ppmv | 0.0022 |
| Dichlorotetrafluoroethane | <0.60 | ug/L | 0.010 | <0.086 | ppmv | 0.0014 |
| Diisopropyl ether (DIPE) | <0.60 | ug/L | 0.010 | <0.14 | ppmv | 0.0024 |
| 1,4-Dioxane | <0.60 | ug/L | 0.010 | <0.17 | ppmv | 0.0028 |
| Ethanol | <0.60 | ug/L | 0.010 | <0.32 | ppmv | 0.0053 |
| Ethyl Acetate | <0.60 | ug/L | 0.010 | <0.17 | ppmv | 0.0028 |
| Ethylbenzene | <0.60 | ug/L | 0.010 | <0.14 | ppmv | 0.0023 |
| Ethyl-tert-Butyl Ether (ETBE) | <0.60 | ug/L | 0.010 | <0.14 | ppmv | 0.0024 |
| 4-Ethyltoluene | <0.60 | ug/L | 0.010 | <0.12 | ppmv | 0.002 |
| Heptane | <0.60 | ug/L | 0.010 | <0.15 | ppmv | 0.0024 |
| Hexachlorobutadiene | <0.60 | ug/L | 0.010 | <0.056 | ppmv | 0.00094 |

**Viorel Vasile**
Operations Manager

# LABORATORY ANALYSIS RESULTS

| | | | |
|---|---|---|---|
| **Client:** | Stantec (TO) | **AA Project No:** | A732178 |
| **Project No:** | 2057123300 | **Date Received:** | 05/03/16 |
| **Project Name:** | Grayson Power Plant Glendale Phase II | **Date Reported:** | 05/18/16 |
| **Matrix:** | Vapor | **Sampled:** | 05/02/16 |
| **Dilution:** | 60 | **Prepared:** | 05/13/16 |
| **Method:** | VOCs by GCMS EPA TO-15 | **Analyzed:** | 05/13/16 |

**SB-12-30-SV**

**6E03026-09 (Vapor)**

| Analyte | Result | (ug/L) | MRL | Result | (ppmv) | MRL |
|---|---|---|---|---|---|---|
| n-Hexane | <0.60 | ug/L | 0.010 | <0.17 | ppmv | 0.0028 |
| 2-Hexanone (MBK) | <0.60 | ug/L | 0.010 | <0.15 | ppmv | 0.0024 |
| Isopropanol (IPA) | <0.60 | ug/L | 0.010 | <0.24 | ppmv | 0.0041 |
| Methyl-tert-Butyl Ether (MTBE) | <0.60 | ug/L | 0.010 | <0.17 | ppmv | 0.0028 |
| Methylene Chloride | <0.60 | ug/L | 0.010 | <0.17 | ppmv | 0.0029 |
| 4-Methyl-2-pentanone (MIBK) | <0.60 | ug/L | 0.010 | <0.15 | ppmv | 0.0024 |
| Naphthalene | <0.60 | ug/L | 0.010 | <0.11 | ppmv | 0.0019 |
| Propylene | <0.60 | ug/L | 0.010 | <0.35 | ppmv | 0.0058 |
| Styrene | <0.60 | ug/L | 0.010 | <0.14 | ppmv | 0.0023 |
| 1,1,2,2-Tetrachloroethane | <0.60 | ug/L | 0.010 | <0.087 | ppmv | 0.0015 |
| Tetrachloroethylene (PCE) | **1.6** | ug/L | 0.010 | **0.24** | ppmv | 0.0015 |
| Tetrahydrofuran (THF) | <0.60 | ug/L | 0.010 | <0.20 | ppmv | 0.0034 |
| Toluene | <0.60 | ug/L | 0.010 | <0.16 | ppmv | 0.0027 |
| 1,2,4-Trichlorobenzene | <0.60 | ug/L | 0.010 | <0.081 | ppmv | 0.0013 |
| 1,1,2-Trichloroethane | <0.60 | ug/L | 0.010 | <0.11 | ppmv | 0.0018 |
| 1,1,1-Trichloroethane | <0.60 | ug/L | 0.010 | <0.11 | ppmv | 0.0018 |
| Trichloroethylene (TCE) | **9.1** | ug/L | 0.010 | **1.7** | ppmv | 0.0019 |
| Trichlorofluoromethane (R11) | <0.60 | ug/L | 0.010 | <0.11 | ppmv | 0.0018 |
| 1,1,2-Trichloro-1,2,2-trifluoroethane (R113) | <0.60 | ug/L | 0.010 | <0.078 | ppmv | 0.0013 |
| 1,3,5-Trimethylbenzene | <0.60 | ug/L | 0.010 | <0.12 | ppmv | 0.002 |

**Viorel Vasile**
Operations Manager

# LABORATORY ANALYSIS RESULTS

| | | | |
|---|---|---|---|
| **Client:** | Stantec (TO) | **AA Project No:** | A732178 |
| **Project No:** | 2057123300 | **Date Received:** | 05/03/16 |
| **Project Name:** | Grayson Power Plant Glendale Phase II | **Date Reported:** | 05/18/16 |
| **Matrix:** | Vapor | **Sampled:** | 05/02/16 |
| **Dilution:** | 60 | **Prepared:** | 05/13/16 |
| **Method:** | VOCs by GCMS EPA TO-15 | **Analyzed:** | 05/13/16 |

**SB-12-30-SV**

**6E03026-09 (Vapor)**

| Analyte | Result | (ug/L) | MRL | Result | (ppmv) | MRL |
|---|---|---|---|---|---|---|
| 1,2,4-Trimethylbenzene | <0.60 | ug/L | 0.010 | <0.12 | ppmv | 0.002 |
| 2,2,4-Trimethylpentane | <0.60 | ug/L | 0.010 | <0.13 | ppmv | 0.0021 |
| Vinyl acetate | <0.60 | ug/L | 0.010 | <0.17 | ppmv | 0.0028 |
| Vinyl bromide | <0.60 | ug/L | 0.010 | <0.14 | ppmv | 0.0023 |
| Vinyl chloride | <0.60 | ug/L | 0.010 | <0.23 | ppmv | 0.0039 |
| o-Xylene | <0.60 | ug/L | 0.010 | <0.14 | ppmv | 0.0023 |
| m,p-Xylenes | <0.60 | ug/L | 0.010 | <0.14 | ppmv | 0.0023 |
| 1,2,3-Trichloropropane | <0.60 | ug/L | 0.010 | <0.100 | ppmv | 0.0017 |
| sec-Butylbenzene | <0.60 | ug/L | 0.010 | <0.11 | ppmv | 0.0018 |
| Isopropylbenzene | <0.60 | ug/L | 0.010 | <0.12 | ppmv | 0.002 |
| n-Propylbenzene | <0.60 | ug/L | 0.010 | <0.12 | ppmv | 0.002 |
| 4-Isopropyltoluene | <0.60 | ug/L | 0.010 | <0.11 | ppmv | 0.0018 |
| n-Butylbenzene | <0.60 | ug/L | 0.010 | <0.11 | ppmv | 0.0018 |

| Surrogates | %REC | %REC Limits |
|---|---|---|
| 4-Bromofluorobenzene | 106 % | 70-130 |

**Viorel Vasile**
Operations Manager

# LABORATORY ANALYSIS RESULTS

| | | | |
|---|---|---|---|
| **Client:** | Stantec (TO) | **AA Project No:** | A732178 |
| **Project No:** | 2057123300 | **Date Received:** | 05/03/16 |
| **Project Name:** | Grayson Power Plant Glendale Phase II | **Date Reported:** | 05/18/16 |
| **Matrix:** | Vapor | **Sampled:** | 05/02/16 |
| **Dilution:** | 2 | **Prepared:** | 05/13/16 |
| **Method:** | VOCs by GCMS EPA TO-15 | **Analyzed:** | 05/13/16 |

**SB-8-5-SV**

**6E03026-10 (Vapor)**

| Analyte | Result | (ug/L) | MRL | Result | (ppmv) | MRL |
|---|---|---|---|---|---|---|
| Acetone | <0.020 | ug/L | 0.010 | <0.0084 | ppmv | 0.0042 |
| Allyl chloride | <0.020 | ug/L | 0.010 | <0.0064 | ppmv | 0.0032 |
| tert-Amyl Methyl Ether (TAME) | <0.020 | ug/L | 0.010 | <0.0048 | ppmv | 0.0024 |
| Benzene | <0.020 | ug/L | 0.010 | <0.0063 | ppmv | 0.0031 |
| Benzyl chloride | <0.020 | ug/L | 0.010 | <0.0039 | ppmv | 0.0019 |
| Bromodichloromethane | <0.020 | ug/L | 0.010 | <0.003 | ppmv | 0.0015 |
| Bromoform | <0.020 | ug/L | 0.010 | <0.0019 | ppmv | 0.00097 |
| Bromomethane | <0.020 | ug/L | 0.010 | <0.0052 | ppmv | 0.0026 |
| 1,3-Butadiene | <0.020 | ug/L | 0.010 | <0.009 | ppmv | 0.0045 |
| 2-Butanone (MEK) | <0.020 | ug/L | 0.010 | <0.0068 | ppmv | 0.0034 |
| tert-Butyl alcohol (TBA) | <0.020 | ug/L | 0.010 | <0.0066 | ppmv | 0.0033 |
| Carbon Disulfide | <0.020 | ug/L | 0.010 | <0.0064 | ppmv | 0.0032 |
| Carbon Tetrachloride | <0.020 | ug/L | 0.010 | <0.0032 | ppmv | 0.0016 |
| Chlorobenzene | <0.020 | ug/L | 0.010 | <0.0043 | ppmv | 0.0022 |
| Chloroethane | <0.020 | ug/L | 0.010 | <0.0076 | ppmv | 0.0038 |
| Chloroform | **0.24** | ug/L | 0.010 | **0.049** | ppmv | 0.002 |
| Chloromethane | <0.020 | ug/L | 0.010 | <0.0097 | ppmv | 0.0048 |
| Cyclohexane | <0.020 | ug/L | 0.010 | <0.0058 | ppmv | 0.0029 |
| Dibromochloromethane | <0.020 | ug/L | 0.010 | <0.0023 | ppmv | 0.0012 |
| 1,2-Dibromoethane (EDB) | <0.020 | ug/L | 0.010 | <0.0026 | ppmv | 0.0013 |
| 1,2-Dichlorobenzene | <0.020 | ug/L | 0.010 | <0.0033 | ppmv | 0.0017 |

**Viorel Vasile**
Operations Manager

# LABORATORY ANALYSIS RESULTS

| | | | |
|---|---|---|---|
| **Client:** | Stantec (TO) | **AA Project No:** | A732178 |
| **Project No:** | 2057123300 | **Date Received:** | 05/03/16 |
| **Project Name:** | Grayson Power Plant Glendale Phase II | **Date Reported:** | 05/18/16 |
| **Matrix:** | Vapor | **Sampled:** | 05/02/16 |
| **Dilution:** | 2 | **Prepared:** | 05/13/16 |
| **Method:** | VOCs by GCMS EPA TO-15 | **Analyzed:** | 05/13/16 |

**SB-8-5-SV**

**6E03026-10 (Vapor)**

| Analyte | Result | (ug/L) | MRL | Result | (ppmv) | MRL |
|---|---|---|---|---|---|---|
| 1,3-Dichlorobenzene | <0.020 | ug/L | 0.010 | <0.0033 | ppmv | 0.0017 |
| 1,4-Dichlorobenzene | <0.020 | ug/L | 0.010 | <0.0033 | ppmv | 0.0017 |
| Dichlorodifluoromethane (R12) | <0.020 | ug/L | 0.010 | <0.004 | ppmv | 0.002 |
| 1,1-Dichloroethane | <0.020 | ug/L | 0.010 | <0.0049 | ppmv | 0.0025 |
| 1,2-Dichloroethane (EDC) | <0.020 | ug/L | 0.010 | <0.0049 | ppmv | 0.0025 |
| cis-1,2-Dichloroethylene | <0.020 | ug/L | 0.010 | <0.005 | ppmv | 0.0025 |
| 1,1-Dichloroethylene | <0.020 | ug/L | 0.010 | <0.005 | ppmv | 0.0025 |
| trans-1,2-Dichloroethylene | <0.020 | ug/L | 0.010 | <0.005 | ppmv | 0.0025 |
| 1,2-Dichloropropane | <0.020 | ug/L | 0.010 | <0.0043 | ppmv | 0.0022 |
| trans-1,3-Dichloropropylene | <0.020 | ug/L | 0.010 | <0.0044 | ppmv | 0.0022 |
| cis-1,3-Dichloropropylene | <0.020 | ug/L | 0.010 | <0.0044 | ppmv | 0.0022 |
| Dichlorotetrafluoroethane | <0.020 | ug/L | 0.010 | <0.0029 | ppmv | 0.0014 |
| Diisopropyl ether (DIPE) | <0.020 | ug/L | 0.010 | <0.0048 | ppmv | 0.0024 |
| 1,4-Dioxane | <0.020 | ug/L | 0.010 | <0.0055 | ppmv | 0.0028 |
| Ethanol | <0.020 | ug/L | 0.010 | <0.011 | ppmv | 0.0053 |
| Ethyl Acetate | <0.020 | ug/L | 0.010 | <0.0055 | ppmv | 0.0028 |
| Ethylbenzene | <0.020 | ug/L | 0.010 | <0.0046 | ppmv | 0.0023 |
| Ethyl-tert-Butyl Ether (ETBE) | <0.020 | ug/L | 0.010 | <0.0048 | ppmv | 0.0024 |
| 4-Ethyltoluene | <0.020 | ug/L | 0.010 | <0.0041 | ppmv | 0.002 |
| Heptane | <0.020 | ug/L | 0.010 | <0.0049 | ppmv | 0.0024 |
| Hexachlorobutadiene | <0.020 | ug/L | 0.010 | <0.0019 | ppmv | 0.00094 |

**Viorel Vasile**
Operations Manager

# LABORATORY ANALYSIS RESULTS

| | | | |
|---|---|---|---|
| **Client:** | Stantec (TO) | **AA Project No:** | A732178 |
| **Project No:** | 2057123300 | **Date Received:** | 05/03/16 |
| **Project Name:** | Grayson Power Plant Glendale Phase II | **Date Reported:** | 05/18/16 |
| **Matrix:** | Vapor | **Sampled:** | 05/02/16 |
| **Dilution:** | 2 | **Prepared:** | 05/13/16 |
| **Method:** | VOCs by GCMS EPA TO-15 | **Analyzed:** | 05/13/16 |

**SB-8-5-SV**

**6E03026-10 (Vapor)**

| Analyte | Result | (ug/L) | MRL | Result | (ppmv) | MRL |
|---|---|---|---|---|---|---|
| n-Hexane | <0.020 | ug/L | 0.010 | <0.0057 | ppmv | 0.0028 |
| 2-Hexanone (MBK) | <0.020 | ug/L | 0.010 | <0.0049 | ppmv | 0.0024 |
| Isopropanol (IPA) | <0.020 | ug/L | 0.010 | <0.0081 | ppmv | 0.0041 |
| Methyl-tert-Butyl Ether (MTBE) | <0.020 | ug/L | 0.010 | <0.0055 | ppmv | 0.0028 |
| Methylene Chloride | <0.020 | ug/L | 0.010 | <0.0058 | ppmv | 0.0029 |
| 4-Methyl-2-pentanone (MIBK) | <0.020 | ug/L | 0.010 | <0.0049 | ppmv | 0.0024 |
| Naphthalene | <0.020 | ug/L | 0.010 | <0.0038 | ppmv | 0.0019 |
| Propylene | **0.20** | ug/L | 0.010 | **0.12** | ppmv | 0.0058 |
| Styrene | <0.020 | ug/L | 0.010 | <0.0047 | ppmv | 0.0023 |
| 1,1,2,2-Tetrachloroethane | <0.020 | ug/L | 0.010 | <0.0029 | ppmv | 0.0015 |
| Tetrachloroethylene (PCE) | <0.020 | ug/L | 0.010 | <0.0029 | ppmv | 0.0015 |
| Tetrahydrofuran (THF) | <0.020 | ug/L | 0.010 | <0.0068 | ppmv | 0.0034 |
| Toluene | **0.022** | ug/L | 0.010 | **0.0058** | ppmv | 0.0027 |
| 1,2,4-Trichlorobenzene | <0.020 | ug/L | 0.010 | <0.0027 | ppmv | 0.0013 |
| 1,1,2-Trichloroethane | <0.020 | ug/L | 0.010 | <0.0037 | ppmv | 0.0018 |
| 1,1,1-Trichloroethane | <0.020 | ug/L | 0.010 | <0.0037 | ppmv | 0.0018 |
| Trichloroethylene (TCE) | <0.020 | ug/L | 0.010 | <0.0037 | ppmv | 0.0019 |
| Trichlorofluoromethane (R11) | <0.020 | ug/L | 0.010 | <0.0036 | ppmv | 0.0018 |
| 1,1,2-Trichloro-1,2,2-trifluoroethane (R113) | <0.020 | ug/L | 0.010 | <0.0026 | ppmv | 0.0013 |
| 1,3,5-Trimethylbenzene | <0.020 | ug/L | 0.010 | <0.0041 | ppmv | 0.002 |

**Viorel Vasile**
Operations Manager

# LABORATORY ANALYSIS RESULTS

| | | | |
|---|---|---|---|
| **Client:** | Stantec (TO) | **AA Project No:** | A732178 |
| **Project No:** | 2057123300 | **Date Received:** | 05/03/16 |
| **Project Name:** | Grayson Power Plant Glendale Phase II | **Date Reported:** | 05/18/16 |
| **Matrix:** | Vapor | **Sampled:** | 05/02/16 |
| **Dilution:** | 2 | **Prepared:** | 05/13/16 |
| **Method:** | VOCs by GCMS EPA TO-15 | **Analyzed:** | 05/13/16 |

**SB-8-5-SV**

**6E03026-10 (Vapor)**

| Analyte | Result | (ug/L) | MRL | Result | (ppmv) | MRL |
|---|---|---|---|---|---|---|
| 1,2,4-Trimethylbenzene | <0.020 | ug/L | 0.010 | <0.0041 | ppmv | 0.002 |
| 2,2,4-Trimethylpentane | **0.036** | ug/L | 0.010 | **0.0077** | ppmv | 0.0021 |
| Vinyl acetate | <0.020 | ug/L | 0.010 | <0.0057 | ppmv | 0.0028 |
| Vinyl bromide | <0.020 | ug/L | 0.010 | <0.0046 | ppmv | 0.0023 |
| Vinyl chloride | <0.020 | ug/L | 0.010 | <0.0078 | ppmv | 0.0039 |
| o-Xylene | <0.020 | ug/L | 0.010 | <0.0046 | ppmv | 0.0023 |
| m,p-Xylenes | **0.027** | ug/L | 0.010 | **0.0062** | ppmv | 0.0023 |
| 1,2,3-Trichloropropane | <0.020 | ug/L | 0.010 | <0.0033 | ppmv | 0.0017 |
| sec-Butylbenzene | <0.020 | ug/L | 0.010 | <0.0036 | ppmv | 0.0018 |
| Isopropylbenzene | <0.020 | ug/L | 0.010 | <0.0041 | ppmv | 0.002 |
| n-Propylbenzene | <0.020 | ug/L | 0.010 | <0.0041 | ppmv | 0.002 |
| 4-Isopropyltoluene | <0.020 | ug/L | 0.010 | <0.0036 | ppmv | 0.0018 |
| n-Butylbenzene | <0.020 | ug/L | 0.010 | <0.0036 | ppmv | 0.0018 |

| Surrogates | %REC | %REC Limits |
|---|---|---|
| 4-Bromofluorobenzene | 106 % | 70-130 |

**Viorel Vasile**
Operations Manager

# LABORATORY ANALYSIS RESULTS

| | | | |
|---|---|---|---|
| **Client:** | Stantec (TO) | **AA Project No:** | A732178 |
| **Project No:** | 2057123300 | **Date Received:** | 05/03/16 |
| **Project Name:** | Grayson Power Plant Glendale Phase II | **Date Reported:** | 05/18/16 |
| **Matrix:** | Vapor | **Sampled:** | 05/02/16 |
| **Dilution:** | 10 | **Prepared:** | 05/13/16 |
| **Method:** | VOCs by GCMS EPA TO-15 | **Analyzed:** | 05/13/16 |

**SB-8-15-SV**

**6E03026-11 (Vapor)**

| Analyte | Result | (ug/L) | MRL | Result | (ppmv) | MRL |
|---|---|---|---|---|---|---|
| Acetone | <0.10 | ug/L | 0.010 | <0.042 | ppmv | 0.0042 |
| Allyl chloride | <0.10 | ug/L | 0.010 | <0.032 | ppmv | 0.0032 |
| tert-Amyl Methyl Ether (TAME) | <0.10 | ug/L | 0.010 | <0.024 | ppmv | 0.0024 |
| Benzene | <0.10 | ug/L | 0.010 | <0.031 | ppmv | 0.0031 |
| Benzyl chloride | <0.10 | ug/L | 0.010 | <0.019 | ppmv | 0.0019 |
| Bromodichloromethane | <0.10 | ug/L | 0.010 | <0.015 | ppmv | 0.0015 |
| Bromoform | <0.10 | ug/L | 0.010 | <0.0097 | ppmv | 0.00097 |
| Bromomethane | <0.10 | ug/L | 0.010 | <0.026 | ppmv | 0.0026 |
| 1,3-Butadiene | <0.10 | ug/L | 0.010 | <0.045 | ppmv | 0.0045 |
| 2-Butanone (MEK) | <0.10 | ug/L | 0.010 | <0.034 | ppmv | 0.0034 |
| tert-Butyl alcohol (TBA) | <0.10 | ug/L | 0.010 | <0.033 | ppmv | 0.0033 |
| Carbon Disulfide | <0.10 | ug/L | 0.010 | <0.032 | ppmv | 0.0032 |
| Carbon Tetrachloride | <0.10 | ug/L | 0.010 | <0.016 | ppmv | 0.0016 |
| Chlorobenzene | <0.10 | ug/L | 0.010 | <0.022 | ppmv | 0.0022 |
| Chloroethane | <0.10 | ug/L | 0.010 | <0.038 | ppmv | 0.0038 |
| Chloroform | **0.10** | ug/L | 0.010 | **0.020** | ppmv | 0.002 |
| Chloromethane | <0.10 | ug/L | 0.010 | <0.048 | ppmv | 0.0048 |
| Cyclohexane | <0.10 | ug/L | 0.010 | <0.029 | ppmv | 0.0029 |
| Dibromochloromethane | <0.10 | ug/L | 0.010 | <0.012 | ppmv | 0.0012 |
| 1,2-Dibromoethane (EDB) | <0.10 | ug/L | 0.010 | <0.013 | ppmv | 0.0013 |
| 1,2-Dichlorobenzene | <0.10 | ug/L | 0.010 | <0.017 | ppmv | 0.0017 |

**Viorel Vasile**
Operations Manager

# LABORATORY ANALYSIS RESULTS

| | | | |
|---|---|---|---|
| **Client:** | Stantec (TO) | **AA Project No:** | A732178 |
| **Project No:** | 2057123300 | **Date Received:** | 05/03/16 |
| **Project Name:** | Grayson Power Plant Glendale Phase II | **Date Reported:** | 05/18/16 |
| **Matrix:** | Vapor | **Sampled:** | 05/02/16 |
| **Dilution:** | 10 | **Prepared:** | 05/13/16 |
| **Method:** | VOCs by GCMS EPA TO-15 | **Analyzed:** | 05/13/16 |

**SB-8-15-SV**

**6E03026-11 (Vapor)**

| Analyte | Result | (ug/L) | MRL | Result | (ppmv) | MRL |
|---|---|---|---|---|---|---|
| 1,3-Dichlorobenzene | <0.10 | ug/L | 0.010 | <0.017 | ppmv | 0.0017 |
| 1,4-Dichlorobenzene | <0.10 | ug/L | 0.010 | <0.017 | ppmv | 0.0017 |
| Dichlorodifluoromethane (R12) | <0.10 | ug/L | 0.010 | <0.020 | ppmv | 0.002 |
| 1,1-Dichloroethane | <0.10 | ug/L | 0.010 | <0.025 | ppmv | 0.0025 |
| 1,2-Dichloroethane (EDC) | <0.10 | ug/L | 0.010 | <0.025 | ppmv | 0.0025 |
| cis-1,2-Dichloroethylene | <0.10 | ug/L | 0.010 | <0.025 | ppmv | 0.0025 |
| 1,1-Dichloroethylene | <0.10 | ug/L | 0.010 | <0.025 | ppmv | 0.0025 |
| trans-1,2-Dichloroethylene | <0.10 | ug/L | 0.010 | <0.025 | ppmv | 0.0025 |
| 1,2-Dichloropropane | <0.10 | ug/L | 0.010 | <0.022 | ppmv | 0.0022 |
| trans-1,3-Dichloropropylene | <0.10 | ug/L | 0.010 | <0.022 | ppmv | 0.0022 |
| cis-1,3-Dichloropropylene | <0.10 | ug/L | 0.010 | <0.022 | ppmv | 0.0022 |
| Dichlorotetrafluoroethane | <0.10 | ug/L | 0.010 | <0.014 | ppmv | 0.0014 |
| Diisopropyl ether (DIPE) | <0.10 | ug/L | 0.010 | <0.024 | ppmv | 0.0024 |
| 1,4-Dioxane | <0.10 | ug/L | 0.010 | <0.028 | ppmv | 0.0028 |
| Ethanol | <0.10 | ug/L | 0.010 | <0.053 | ppmv | 0.0053 |
| Ethyl Acetate | <0.10 | ug/L | 0.010 | <0.028 | ppmv | 0.0028 |
| Ethylbenzene | <0.10 | ug/L | 0.010 | <0.023 | ppmv | 0.0023 |
| Ethyl-tert-Butyl Ether (ETBE) | <0.10 | ug/L | 0.010 | <0.024 | ppmv | 0.0024 |
| 4-Ethyltoluene | <0.10 | ug/L | 0.010 | <0.020 | ppmv | 0.002 |
| Heptane | <0.10 | ug/L | 0.010 | <0.024 | ppmv | 0.0024 |
| Hexachlorobutadiene | <0.10 | ug/L | 0.010 | <0.0094 | ppmv | 0.00094 |

**Viorel Vasile**
Operations Manager

# LABORATORY ANALYSIS RESULTS

| | | | |
|---|---|---|---|
| **Client:** | Stantec (TO) | **AA Project No:** | A732178 |
| **Project No:** | 2057123300 | **Date Received:** | 05/03/16 |
| **Project Name:** | Grayson Power Plant Glendale Phase II | **Date Reported:** | 05/18/16 |
| **Matrix:** | Vapor | **Sampled:** | 05/02/16 |
| **Dilution:** | 10 | **Prepared:** | 05/13/16 |
| **Method:** | VOCs by GCMS EPA TO-15 | **Analyzed:** | 05/13/16 |

**SB-8-15-SV**

**6E03026-11 (Vapor)**

| Analyte | Result | (ug/L) | MRL | Result | (ppmv) | MRL |
|---|---|---|---|---|---|---|
| n-Hexane | <0.10 | ug/L | 0.010 | <0.028 | ppmv | 0.0028 |
| 2-Hexanone (MBK) | <0.10 | ug/L | 0.010 | <0.024 | ppmv | 0.0024 |
| Isopropanol (IPA) | <0.10 | ug/L | 0.010 | <0.041 | ppmv | 0.0041 |
| Methyl-tert-Butyl Ether (MTBE) | <0.10 | ug/L | 0.010 | <0.028 | ppmv | 0.0028 |
| Methylene Chloride | <0.10 | ug/L | 0.010 | <0.029 | ppmv | 0.0029 |
| 4-Methyl-2-pentanone (MIBK) | <0.10 | ug/L | 0.010 | <0.024 | ppmv | 0.0024 |
| Naphthalene | <0.10 | ug/L | 0.010 | <0.019 | ppmv | 0.0019 |
| Propylene | <0.10 | ug/L | 0.010 | <0.058 | ppmv | 0.0058 |
| Styrene | <0.10 | ug/L | 0.010 | <0.023 | ppmv | 0.0023 |
| 1,1,2,2-Tetrachloroethane | <0.10 | ug/L | 0.010 | <0.015 | ppmv | 0.0015 |
| Tetrachloroethylene (PCE) | **0.17** | ug/L | 0.010 | **0.025** | ppmv | 0.0015 |
| Tetrahydrofuran (THF) | <0.10 | ug/L | 0.010 | <0.034 | ppmv | 0.0034 |
| Toluene | **0.29** | ug/L | 0.010 | **0.077** | ppmv | 0.0027 |
| 1,2,4-Trichlorobenzene | <0.10 | ug/L | 0.010 | <0.013 | ppmv | 0.0013 |
| 1,1,2-Trichloroethane | <0.10 | ug/L | 0.010 | <0.018 | ppmv | 0.0018 |
| 1,1,1-Trichloroethane | <0.10 | ug/L | 0.010 | <0.018 | ppmv | 0.0018 |
| Trichloroethylene (TCE) | <0.10 | ug/L | 0.010 | <0.019 | ppmv | 0.0019 |
| Trichlorofluoromethane (R11) | <0.10 | ug/L | 0.010 | <0.018 | ppmv | 0.0018 |
| 1,1,2-Trichloro-1,2,2-trifluoroethane (R113) | <0.10 | ug/L | 0.010 | <0.013 | ppmv | 0.0013 |
| 1,3,5-Trimethylbenzene | <0.10 | ug/L | 0.010 | <0.020 | ppmv | 0.002 |

**Viorel Vasile**
Operations Manager

# LABORATORY ANALYSIS RESULTS

| | | | |
|---|---|---|---|
| **Client:** | Stantec (TO) | **AA Project No:** | A732178 |
| **Project No:** | 2057123300 | **Date Received:** | 05/03/16 |
| **Project Name:** | Grayson Power Plant Glendale Phase II | **Date Reported:** | 05/18/16 |
| **Matrix:** | Vapor | **Sampled:** | 05/02/16 |
| **Dilution:** | 10 | **Prepared:** | 05/13/16 |
| **Method:** | VOCs by GCMS EPA TO-15 | **Analyzed:** | 05/13/16 |

**SB-8-15-SV**

**6E03026-11 (Vapor)**

| Analyte | Result | (ug/L) | MRL | Result | (ppmv) | MRL |
|---|---|---|---|---|---|---|
| 1,2,4-Trimethylbenzene | **0.17** | ug/L | 0.010 | **0.035** | ppmv | 0.002 |
| 2,2,4-Trimethylpentane | <0.10 | ug/L | 0.010 | <0.021 | ppmv | 0.0021 |
| Vinyl acetate | <0.10 | ug/L | 0.010 | <0.028 | ppmv | 0.0028 |
| Vinyl bromide | <0.10 | ug/L | 0.010 | <0.023 | ppmv | 0.0023 |
| Vinyl chloride | <0.10 | ug/L | 0.010 | <0.039 | ppmv | 0.0039 |
| o-Xylene | **0.14** | ug/L | 0.010 | **0.032** | ppmv | 0.0023 |
| m,p-Xylenes | **0.40** | ug/L | 0.010 | **0.092** | ppmv | 0.0023 |
| 1,2,3-Trichloropropane | <0.10 | ug/L | 0.010 | <0.017 | ppmv | 0.0017 |
| sec-Butylbenzene | <0.10 | ug/L | 0.010 | <0.018 | ppmv | 0.0018 |
| Isopropylbenzene | <0.10 | ug/L | 0.010 | <0.020 | ppmv | 0.002 |
| n-Propylbenzene | <0.10 | ug/L | 0.010 | <0.020 | ppmv | 0.002 |
| 4-Isopropyltoluene | <0.10 | ug/L | 0.010 | <0.018 | ppmv | 0.0018 |
| n-Butylbenzene | <0.10 | ug/L | 0.010 | <0.018 | ppmv | 0.0018 |

| Surrogates | %REC | %REC Limits |
|---|---|---|
| 4-Bromofluorobenzene | 113 % | 70-130 |

**Viorel Vasile**
Operations Manager

# LABORATORY ANALYSIS RESULTS

| | | | |
|---|---|---|---|
| **Client:** | Stantec (TO) | **AA Project No:** | A732178 |
| **Project No:** | 2057123300 | **Date Received:** | 05/03/16 |
| **Project Name:** | Grayson Power Plant Glendale Phase II | **Date Reported:** | 05/18/16 |
| **Matrix:** | Vapor | **Sampled:** | 05/02/16 |
| **Dilution:** | 30 | **Prepared:** | 05/16/16 |
| **Method:** | VOCs by GCMS EPA TO-15 | **Analyzed:** | 05/16/16 |

**SB-8-30-SV**

**6E03026-12 (Vapor)**

| Analyte | Result | (ug/L) | MRL | Result | (ppmv) | MRL |
|---|---|---|---|---|---|---|
| Acetone | <0.30 | ug/L | 0.010 | <0.13 | ppmv | 0.0042 |
| Allyl chloride | <0.30 | ug/L | 0.010 | <0.096 | ppmv | 0.0032 |
| tert-Amyl Methyl Ether (TAME) | <0.30 | ug/L | 0.010 | <0.072 | ppmv | 0.0024 |
| Benzene | <0.30 | ug/L | 0.010 | <0.094 | ppmv | 0.0031 |
| Benzyl chloride | <0.30 | ug/L | 0.010 | <0.058 | ppmv | 0.0019 |
| Bromodichloromethane | <0.30 | ug/L | 0.010 | <0.045 | ppmv | 0.0015 |
| Bromoform | <0.30 | ug/L | 0.010 | <0.029 | ppmv | 0.00097 |
| Bromomethane | <0.30 | ug/L | 0.010 | <0.077 | ppmv | 0.0026 |
| 1,3-Butadiene | <0.30 | ug/L | 0.010 | <0.14 | ppmv | 0.0045 |
| 2-Butanone (MEK) | <0.30 | ug/L | 0.010 | <0.10 | ppmv | 0.0034 |
| tert-Butyl alcohol (TBA) | <0.30 | ug/L | 0.010 | <0.099 | ppmv | 0.0033 |
| Carbon Disulfide | <0.30 | ug/L | 0.010 | <0.096 | ppmv | 0.0032 |
| Carbon Tetrachloride | <0.30 | ug/L | 0.010 | <0.048 | ppmv | 0.0016 |
| Chlorobenzene | <0.30 | ug/L | 0.010 | <0.065 | ppmv | 0.0022 |
| Chloroethane | <0.30 | ug/L | 0.010 | <0.11 | ppmv | 0.0038 |
| Chloroform | <0.30 | ug/L | 0.010 | <0.061 | ppmv | 0.002 |
| Chloromethane | <0.30 | ug/L | 0.010 | <0.15 | ppmv | 0.0048 |
| Cyclohexane | <0.30 | ug/L | 0.010 | <0.087 | ppmv | 0.0029 |
| Dibromochloromethane | <0.30 | ug/L | 0.010 | <0.035 | ppmv | 0.0012 |
| 1,2-Dibromoethane (EDB) | <0.30 | ug/L | 0.010 | <0.039 | ppmv | 0.0013 |
| 1,2-Dichlorobenzene | <0.30 | ug/L | 0.010 | <0.050 | ppmv | 0.0017 |

**Viorel Vasile**
Operations Manager

# LABORATORY ANALYSIS RESULTS

| | | | |
|---|---|---|---|
| **Client:** | Stantec (TO) | **AA Project No:** | A732178 |
| **Project No:** | 2057123300 | **Date Received:** | 05/03/16 |
| **Project Name:** | Grayson Power Plant Glendale Phase II | **Date Reported:** | 05/18/16 |
| **Matrix:** | Vapor | **Sampled:** | 05/02/16 |
| **Dilution:** | 30 | **Prepared:** | 05/16/16 |
| **Method:** | VOCs by GCMS EPA TO-15 | **Analyzed:** | 05/16/16 |

**SB-8-30-SV**

**6E03026-12 (Vapor)**

| Analyte | Result | (ug/L) | MRL | Result | (ppmv) | MRL |
|---|---|---|---|---|---|---|
| 1,3-Dichlorobenzene | <0.30 | ug/L | 0.010 | <0.050 | ppmv | 0.0017 |
| 1,4-Dichlorobenzene | <0.30 | ug/L | 0.010 | <0.050 | ppmv | 0.0017 |
| Dichlorodifluoromethane (R12) | <0.30 | ug/L | 0.010 | <0.061 | ppmv | 0.002 |
| 1,1-Dichloroethane | <0.30 | ug/L | 0.010 | <0.074 | ppmv | 0.0025 |
| 1,2-Dichloroethane (EDC) | <0.30 | ug/L | 0.010 | <0.074 | ppmv | 0.0025 |
| cis-1,2-Dichloroethylene | <0.30 | ug/L | 0.010 | <0.076 | ppmv | 0.0025 |
| 1,1-Dichloroethylene | **2.0** | ug/L | 0.010 | **0.50** | ppmv | 0.0025 |
| trans-1,2-Dichloroethylene | <0.30 | ug/L | 0.010 | <0.076 | ppmv | 0.0025 |
| 1,2-Dichloropropane | <0.30 | ug/L | 0.010 | <0.065 | ppmv | 0.0022 |
| trans-1,3-Dichloropropylene | <0.30 | ug/L | 0.010 | <0.066 | ppmv | 0.0022 |
| cis-1,3-Dichloropropylene | <0.30 | ug/L | 0.010 | <0.066 | ppmv | 0.0022 |
| Dichlorotetrafluoroethane | <0.30 | ug/L | 0.010 | <0.043 | ppmv | 0.0014 |
| Diisopropyl ether (DIPE) | <0.30 | ug/L | 0.010 | <0.072 | ppmv | 0.0024 |
| 1,4-Dioxane | <0.30 | ug/L | 0.010 | <0.083 | ppmv | 0.0028 |
| Ethanol | <0.30 | ug/L | 0.010 | <0.16 | ppmv | 0.0053 |
| Ethyl Acetate | <0.30 | ug/L | 0.010 | <0.083 | ppmv | 0.0028 |
| Ethylbenzene | <0.30 | ug/L | 0.010 | <0.069 | ppmv | 0.0023 |
| Ethyl-tert-Butyl Ether (ETBE) | <0.30 | ug/L | 0.010 | <0.072 | ppmv | 0.0024 |
| 4-Ethyltoluene | <0.30 | ug/L | 0.010 | <0.061 | ppmv | 0.002 |
| Heptane | <0.30 | ug/L | 0.010 | <0.073 | ppmv | 0.0024 |
| Hexachlorobutadiene | <0.30 | ug/L | 0.010 | <0.028 | ppmv | 0.00094 |

**Viorel Vasile**
Operations Manager

# LABORATORY ANALYSIS RESULTS

| | | | |
|---|---|---|---|
| **Client:** | Stantec (TO) | **AA Project No:** | A732178 |
| **Project No:** | 2057123300 | **Date Received:** | 05/03/16 |
| **Project Name:** | Grayson Power Plant Glendale Phase II | **Date Reported:** | 05/18/16 |
| **Matrix:** | Vapor | **Sampled:** | 05/02/16 |
| **Dilution:** | 30 | **Prepared:** | 05/16/16 |
| **Method:** | VOCs by GCMS EPA TO-15 | **Analyzed:** | 05/16/16 |

**SB-8-30-SV**

**6E03026-12 (Vapor)**

| Analyte | Result | (ug/L) | MRL | Result | (ppmv) | MRL |
|---|---|---|---|---|---|---|
| n-Hexane | <0.30 | ug/L | 0.010 | <0.085 | ppmv | 0.0028 |
| 2-Hexanone (MBK) | <0.30 | ug/L | 0.010 | <0.073 | ppmv | 0.0024 |
| Isopropanol (IPA) | <0.30 | ug/L | 0.010 | <0.12 | ppmv | 0.0041 |
| Methyl-tert-Butyl Ether (MTBE) | <0.30 | ug/L | 0.010 | <0.083 | ppmv | 0.0028 |
| Methylene Chloride | <0.30 | ug/L | 0.010 | <0.086 | ppmv | 0.0029 |
| 4-Methyl-2-pentanone (MIBK) | <0.30 | ug/L | 0.010 | <0.073 | ppmv | 0.0024 |
| Naphthalene | <0.30 | ug/L | 0.010 | <0.057 | ppmv | 0.0019 |
| Propylene | <0.30 | ug/L | 0.010 | <0.17 | ppmv | 0.0058 |
| Styrene | <0.30 | ug/L | 0.010 | <0.070 | ppmv | 0.0023 |
| 1,1,2,2-Tetrachloroethane | <0.30 | ug/L | 0.010 | <0.044 | ppmv | 0.0015 |
| Tetrachloroethylene (PCE) | **1.4** | ug/L | 0.010 | **0.21** | ppmv | 0.0015 |
| Tetrahydrofuran (THF) | <0.30 | ug/L | 0.010 | <0.10 | ppmv | 0.0034 |
| Toluene | <0.30 | ug/L | 0.010 | <0.080 | ppmv | 0.0027 |
| 1,2,4-Trichlorobenzene | <0.30 | ug/L | 0.010 | <0.040 | ppmv | 0.0013 |
| 1,1,2-Trichloroethane | <0.30 | ug/L | 0.010 | <0.055 | ppmv | 0.0018 |
| 1,1,1-Trichloroethane | <0.30 | ug/L | 0.010 | <0.055 | ppmv | 0.0018 |
| Trichloroethylene (TCE) | **7.1** | ug/L | 0.010 | **1.3** | ppmv | 0.0019 |
| Trichlorofluoromethane (R11) | <0.30 | ug/L | 0.010 | <0.053 | ppmv | 0.0018 |
| 1,1,2-Trichloro-1,2,2-trifluoroethane (R113) | <0.30 | ug/L | 0.010 | <0.039 | ppmv | 0.0013 |
| 1,3,5-Trimethylbenzene | <0.30 | ug/L | 0.010 | <0.061 | ppmv | 0.002 |

**Viorel Vasile**
Operations Manager

# LABORATORY ANALYSIS RESULTS

| | | | |
|---|---|---|---|
| **Client:** | Stantec (TO) | **AA Project No:** | A732178 |
| **Project No:** | 2057123300 | **Date Received:** | 05/03/16 |
| **Project Name:** | Grayson Power Plant Glendale Phase II | **Date Reported:** | 05/18/16 |
| **Matrix:** | Vapor | **Sampled:** | 05/02/16 |
| **Dilution:** | 30 | **Prepared:** | 05/16/16 |
| **Method:** | VOCs by GCMS EPA TO-15 | **Analyzed:** | 05/16/16 |

**SB-8-30-SV**

**6E03026-12 (Vapor)**

| Analyte | Result | (ug/L) | MRL | Result | (ppmv) | MRL |
|---|---|---|---|---|---|---|
| 1,2,4-Trimethylbenzene | <0.30 | ug/L | 0.010 | <0.061 | ppmv | 0.002 |
| 2,2,4-Trimethylpentane | <0.30 | ug/L | 0.010 | <0.064 | ppmv | 0.0021 |
| Vinyl acetate | <0.30 | ug/L | 0.010 | <0.085 | ppmv | 0.0028 |
| Vinyl bromide | <0.30 | ug/L | 0.010 | <0.069 | ppmv | 0.0023 |
| Vinyl chloride | <0.30 | ug/L | 0.010 | <0.12 | ppmv | 0.0039 |
| o-Xylene | <0.30 | ug/L | 0.010 | <0.069 | ppmv | 0.0023 |
| m,p-Xylenes | **0.42** | ug/L | 0.010 | **0.097** | ppmv | 0.0023 |
| 1,2,3-Trichloropropane | <0.30 | ug/L | 0.010 | <0.050 | ppmv | 0.0017 |
| sec-Butylbenzene | <0.30 | ug/L | 0.010 | <0.055 | ppmv | 0.0018 |
| Isopropylbenzene | <0.30 | ug/L | 0.010 | <0.061 | ppmv | 0.002 |
| n-Propylbenzene | <0.30 | ug/L | 0.010 | <0.061 | ppmv | 0.002 |
| 4-Isopropyltoluene | <0.30 | ug/L | 0.010 | <0.055 | ppmv | 0.0018 |
| n-Butylbenzene | <0.30 | ug/L | 0.010 | <0.055 | ppmv | 0.0018 |

| Surrogates | %REC | %REC Limits |
|---|---|---|
| 4-Bromofluorobenzene | 101 % | 70-130 |

**Viorel Vasile**
Operations Manager

# LABORATORY ANALYSIS RESULTS

| | | | |
|---|---|---|---|
| **Client:** | Stantec (TO) | **AA Project No:** | A732178 |
| **Project No:** | 2057123300 | **Date Received:** | 05/03/16 |
| **Project Name:** | Grayson Power Plant Glendale Phase II | **Date Reported:** | 05/18/16 |
| **Matrix:** | Vapor | **Sampled:** | 05/02/16 |
| **Dilution:** | 1 | **Prepared:** | 05/16/16 |
| **Method:** | VOCs by GCMS EPA TO-15 | **Analyzed:** | 05/16/16 |

**SB-6-5-SV**

**6E03026-13 (Vapor)**

| Analyte | Result | (ug/L) | MRL | Result | (ppmv) | MRL |
|---|---|---|---|---|---|---|
| Acetone | <0.010 | ug/L | 0.010 | <0.0042 | ppmv | 0.0042 |
| Allyl chloride | <0.010 | ug/L | 0.010 | <0.0032 | ppmv | 0.0032 |
| tert-Amyl Methyl Ether (TAME) | <0.010 | ug/L | 0.010 | <0.0024 | ppmv | 0.0024 |
| Benzene | <0.010 | ug/L | 0.010 | <0.0031 | ppmv | 0.0031 |
| Benzyl chloride | <0.010 | ug/L | 0.010 | <0.0019 | ppmv | 0.0019 |
| Bromodichloromethane | <0.010 | ug/L | 0.010 | <0.0015 | ppmv | 0.0015 |
| Bromoform | <0.010 | ug/L | 0.010 | <0.00097 | ppmv | 0.00097 |
| Bromomethane | <0.010 | ug/L | 0.010 | <0.0026 | ppmv | 0.0026 |
| 1,3-Butadiene | <0.010 | ug/L | 0.010 | <0.0045 | ppmv | 0.0045 |
| 2-Butanone (MEK) | <0.010 | ug/L | 0.010 | <0.0034 | ppmv | 0.0034 |
| tert-Butyl alcohol (TBA) | <0.010 | ug/L | 0.010 | <0.0033 | ppmv | 0.0033 |
| Carbon Disulfide | <0.010 | ug/L | 0.010 | <0.0032 | ppmv | 0.0032 |
| Carbon Tetrachloride | <0.010 | ug/L | 0.010 | <0.0016 | ppmv | 0.0016 |
| Chlorobenzene | <0.010 | ug/L | 0.010 | <0.0022 | ppmv | 0.0022 |
| Chloroethane | <0.010 | ug/L | 0.010 | <0.0038 | ppmv | 0.0038 |
| Chloroform | <0.010 | ug/L | 0.010 | <0.002 | ppmv | 0.002 |
| Chloromethane | <0.010 | ug/L | 0.010 | <0.0048 | ppmv | 0.0048 |
| Cyclohexane | <0.010 | ug/L | 0.010 | <0.0029 | ppmv | 0.0029 |
| Dibromochloromethane | <0.010 | ug/L | 0.010 | <0.0012 | ppmv | 0.0012 |
| 1,2-Dibromoethane (EDB) | <0.010 | ug/L | 0.010 | <0.0013 | ppmv | 0.0013 |
| 1,2-Dichlorobenzene | <0.010 | ug/L | 0.010 | <0.0017 | ppmv | 0.0017 |

**Viorel Vasile**
Operations Manager

# LABORATORY ANALYSIS RESULTS

| | | | |
|---|---|---|---|
| **Client:** | Stantec (TO) | **AA Project No:** | A732178 |
| **Project No:** | 2057123300 | **Date Received:** | 05/03/16 |
| **Project Name:** | Grayson Power Plant Glendale Phase II | **Date Reported:** | 05/18/16 |
| **Matrix:** | Vapor | **Sampled:** | 05/02/16 |
| **Dilution:** | 1 | **Prepared:** | 05/16/16 |
| **Method:** | VOCs by GCMS EPA TO-15 | **Analyzed:** | 05/16/16 |

**SB-6-5-SV**

**6E03026-13 (Vapor)**

| Analyte | Result | (ug/L) | MRL | Result | (ppmv) | MRL |
|---|---|---|---|---|---|---|
| 1,3-Dichlorobenzene | <0.010 | ug/L | 0.010 | <0.0017 | ppmv | 0.0017 |
| 1,4-Dichlorobenzene | <0.010 | ug/L | 0.010 | <0.0017 | ppmv | 0.0017 |
| Dichlorodifluoromethane (R12) | <0.010 | ug/L | 0.010 | <0.002 | ppmv | 0.002 |
| 1,1-Dichloroethane | <0.010 | ug/L | 0.010 | <0.0025 | ppmv | 0.0025 |
| 1,2-Dichloroethane (EDC) | <0.010 | ug/L | 0.010 | <0.0025 | ppmv | 0.0025 |
| cis-1,2-Dichloroethylene | <0.010 | ug/L | 0.010 | <0.0025 | ppmv | 0.0025 |
| 1,1-Dichloroethylene | <0.010 | ug/L | 0.010 | <0.0025 | ppmv | 0.0025 |
| trans-1,2-Dichloroethylene | <0.010 | ug/L | 0.010 | <0.0025 | ppmv | 0.0025 |
| 1,2-Dichloropropane | <0.010 | ug/L | 0.010 | <0.0022 | ppmv | 0.0022 |
| trans-1,3-Dichloropropylene | <0.010 | ug/L | 0.010 | <0.0022 | ppmv | 0.0022 |
| cis-1,3-Dichloropropylene | <0.010 | ug/L | 0.010 | <0.0022 | ppmv | 0.0022 |
| Dichlorotetrafluoroethane | <0.010 | ug/L | 0.010 | <0.0014 | ppmv | 0.0014 |
| Diisopropyl ether (DIPE) | <0.010 | ug/L | 0.010 | <0.0024 | ppmv | 0.0024 |
| 1,4-Dioxane | <0.010 | ug/L | 0.010 | <0.0028 | ppmv | 0.0028 |
| Ethanol | <0.010 | ug/L | 0.010 | <0.0053 | ppmv | 0.0053 |
| Ethyl Acetate | <0.010 | ug/L | 0.010 | <0.0028 | ppmv | 0.0028 |
| Ethylbenzene | <0.010 | ug/L | 0.010 | <0.0023 | ppmv | 0.0023 |
| Ethyl-tert-Butyl Ether (ETBE) | <0.010 | ug/L | 0.010 | <0.0024 | ppmv | 0.0024 |
| 4-Ethyltoluene | <0.010 | ug/L | 0.010 | <0.002 | ppmv | 0.002 |
| Heptane | <0.010 | ug/L | 0.010 | <0.0024 | ppmv | 0.0024 |
| Hexachlorobutadiene | <0.010 | ug/L | 0.010 | <0.00094 | ppmv | 0.00094 |

**Viorel Vasile**
Operations Manager

# LABORATORY ANALYSIS RESULTS

| | | | |
|---|---|---|---|
| **Client:** | Stantec (TO) | **AA Project No:** | A732178 |
| **Project No:** | 2057123300 | **Date Received:** | 05/03/16 |
| **Project Name:** | Grayson Power Plant Glendale Phase II | **Date Reported:** | 05/18/16 |
| **Matrix:** | Vapor | **Sampled:** | 05/02/16 |
| **Dilution:** | 1 | **Prepared:** | 05/16/16 |
| **Method:** | VOCs by GCMS EPA TO-15 | **Analyzed:** | 05/16/16 |

**SB-6-5-SV**

**6E03026-13 (Vapor)**

| Analyte | Result | (ug/L) | MRL | Result | (ppmv) | MRL |
|---|---|---|---|---|---|---|
| n-Hexane | <0.010 | ug/L | 0.010 | <0.0028 | ppmv | 0.0028 |
| 2-Hexanone (MBK) | <0.010 | ug/L | 0.010 | <0.0024 | ppmv | 0.0024 |
| Isopropanol (IPA) | <0.010 | ug/L | 0.010 | <0.0041 | ppmv | 0.0041 |
| Methyl-tert-Butyl Ether (MTBE) | <0.010 | ug/L | 0.010 | <0.0028 | ppmv | 0.0028 |
| Methylene Chloride | <0.010 | ug/L | 0.010 | <0.0029 | ppmv | 0.0029 |
| 4-Methyl-2-pentanone (MIBK) | <0.010 | ug/L | 0.010 | <0.0024 | ppmv | 0.0024 |
| Naphthalene | <0.010 | ug/L | 0.010 | <0.0019 | ppmv | 0.0019 |
| Propylene | <0.010 | ug/L | 0.010 | <0.0058 | ppmv | 0.0058 |
| Styrene | <0.010 | ug/L | 0.010 | <0.0023 | ppmv | 0.0023 |
| 1,1,2,2-Tetrachloroethane | <0.010 | ug/L | 0.010 | <0.0015 | ppmv | 0.0015 |
| Tetrachloroethylene (PCE) | <0.010 | ug/L | 0.010 | <0.0015 | ppmv | 0.0015 |
| Tetrahydrofuran (THF) | **0.010** | ug/L | 0.010 | **0.0034** | ppmv | 0.0034 |
| Toluene | <0.010 | ug/L | 0.010 | <0.0027 | ppmv | 0.0027 |
| 1,2,4-Trichlorobenzene | <0.010 | ug/L | 0.010 | <0.0013 | ppmv | 0.0013 |
| 1,1,2-Trichloroethane | <0.010 | ug/L | 0.010 | <0.0018 | ppmv | 0.0018 |
| 1,1,1-Trichloroethane | <0.010 | ug/L | 0.010 | <0.0018 | ppmv | 0.0018 |
| Trichloroethylene (TCE) | <0.010 | ug/L | 0.010 | <0.0019 | ppmv | 0.0019 |
| Trichlorofluoromethane (R11) | <0.010 | ug/L | 0.010 | <0.0018 | ppmv | 0.0018 |
| 1,1,2-Trichloro-1,2,2-trifluoroethane (R113) | <0.010 | ug/L | 0.010 | <0.0013 | ppmv | 0.0013 |
| 1,3,5-Trimethylbenzene | <0.010 | ug/L | 0.010 | <0.002 | ppmv | 0.002 |

**Viorel Vasile**
Operations Manager

# LABORATORY ANALYSIS RESULTS

| | | | |
|---|---|---|---|
| **Client:** | Stantec (TO) | **AA Project No:** | A732178 |
| **Project No:** | 2057123300 | **Date Received:** | 05/03/16 |
| **Project Name:** | Grayson Power Plant Glendale Phase II | **Date Reported:** | 05/18/16 |
| **Matrix:** | Vapor | **Sampled:** | 05/02/16 |
| **Dilution:** | 1 | **Prepared:** | 05/16/16 |
| **Method:** | VOCs by GCMS EPA TO-15 | **Analyzed:** | 05/16/16 |

**SB-6-5-SV**

**6E03026-13 (Vapor)**

| Analyte | Result | (ug/L) | MRL | Result | (ppmv) | MRL |
|---|---|---|---|---|---|---|
| 1,2,4-Trimethylbenzene | <0.010 | ug/L | 0.010 | <0.002 | ppmv | 0.002 |
| 2,2,4-Trimethylpentane | <0.010 | ug/L | 0.010 | <0.0021 | ppmv | 0.0021 |
| Vinyl acetate | <0.010 | ug/L | 0.010 | <0.0028 | ppmv | 0.0028 |
| Vinyl bromide | <0.010 | ug/L | 0.010 | <0.0023 | ppmv | 0.0023 |
| Vinyl chloride | <0.010 | ug/L | 0.010 | <0.0039 | ppmv | 0.0039 |
| o-Xylene | <0.010 | ug/L | 0.010 | <0.0023 | ppmv | 0.0023 |
| m,p-Xylenes | **0.013** | ug/L | 0.010 | **0.003** | ppmv | 0.0023 |
| 1,2,3-Trichloropropane | <0.010 | ug/L | 0.010 | <0.0017 | ppmv | 0.0017 |
| sec-Butylbenzene | <0.010 | ug/L | 0.010 | <0.0018 | ppmv | 0.0018 |
| Isopropylbenzene | <0.010 | ug/L | 0.010 | <0.002 | ppmv | 0.002 |
| n-Propylbenzene | <0.010 | ug/L | 0.010 | <0.002 | ppmv | 0.002 |
| 4-Isopropyltoluene | <0.010 | ug/L | 0.010 | <0.0018 | ppmv | 0.0018 |
| n-Butylbenzene | <0.010 | ug/L | 0.010 | <0.0018 | ppmv | 0.0018 |

| Surrogates | %REC | %REC Limits |
|---|---|---|
| 4-Bromofluorobenzene | 102 % | 70-130 |

**Viorel Vasile**
Operations Manager

# LABORATORY ANALYSIS RESULTS

| | | | |
|---|---|---|---|
| **Client:** | Stantec (TO) | **AA Project No:** | A732178 |
| **Project No:** | 2057123300 | **Date Received:** | 05/03/16 |
| **Project Name:** | Grayson Power Plant Glendale Phase II | **Date Reported:** | 05/18/16 |
| **Matrix:** | Vapor | **Sampled:** | 05/02/16 |
| **Dilution:** | 2 | **Prepared:** | 05/16/16 |
| **Method:** | VOCs by GCMS EPA TO-15 | **Analyzed:** | 05/16/16 |

**SB-6-15-SV**

**6E03026-14 (Vapor)**

| Analyte | Result | (ug/L) | MRL | Result | (ppmv) | MRL |
|---|---|---|---|---|---|---|
| Acetone | <0.020 | ug/L | 0.010 | <0.0084 | ppmv | 0.0042 |
| Allyl chloride | <0.020 | ug/L | 0.010 | <0.0064 | ppmv | 0.0032 |
| tert-Amyl Methyl Ether (TAME) | <0.020 | ug/L | 0.010 | <0.0048 | ppmv | 0.0024 |
| Benzene | <0.020 | ug/L | 0.010 | <0.0063 | ppmv | 0.0031 |
| Benzyl chloride | <0.020 | ug/L | 0.010 | <0.0039 | ppmv | 0.0019 |
| Bromodichloromethane | <0.020 | ug/L | 0.010 | <0.003 | ppmv | 0.0015 |
| Bromoform | <0.020 | ug/L | 0.010 | <0.0019 | ppmv | 0.00097 |
| Bromomethane | <0.020 | ug/L | 0.010 | <0.0052 | ppmv | 0.0026 |
| 1,3-Butadiene | <0.020 | ug/L | 0.010 | <0.009 | ppmv | 0.0045 |
| 2-Butanone (MEK) | <0.020 | ug/L | 0.010 | <0.0068 | ppmv | 0.0034 |
| tert-Butyl alcohol (TBA) | <0.020 | ug/L | 0.010 | <0.0066 | ppmv | 0.0033 |
| Carbon Disulfide | <0.020 | ug/L | 0.010 | <0.0064 | ppmv | 0.0032 |
| Carbon Tetrachloride | <0.020 | ug/L | 0.010 | <0.0032 | ppmv | 0.0016 |
| Chlorobenzene | <0.020 | ug/L | 0.010 | <0.0043 | ppmv | 0.0022 |
| Chloroethane | <0.020 | ug/L | 0.010 | <0.0076 | ppmv | 0.0038 |
| Chloroform | <0.020 | ug/L | 0.010 | <0.0041 | ppmv | 0.002 |
| Chloromethane | <0.020 | ug/L | 0.010 | <0.0097 | ppmv | 0.0048 |
| Cyclohexane | <0.020 | ug/L | 0.010 | <0.0058 | ppmv | 0.0029 |
| Dibromochloromethane | <0.020 | ug/L | 0.010 | <0.0023 | ppmv | 0.0012 |
| 1,2-Dibromoethane (EDB) | <0.020 | ug/L | 0.010 | <0.0026 | ppmv | 0.0013 |
| 1,2-Dichlorobenzene | <0.020 | ug/L | 0.010 | <0.0033 | ppmv | 0.0017 |

**Viorel Vasile**
Operations Manager

# LABORATORY ANALYSIS RESULTS

| | | | |
|---|---|---|---|
| **Client:** | Stantec (TO) | **AA Project No:** | A732178 |
| **Project No:** | 2057123300 | **Date Received:** | 05/03/16 |
| **Project Name:** | Grayson Power Plant Glendale Phase II | **Date Reported:** | 05/18/16 |
| **Matrix:** | Vapor | **Sampled:** | 05/02/16 |
| **Dilution:** | 2 | **Prepared:** | 05/16/16 |
| **Method:** | VOCs by GCMS EPA TO-15 | **Analyzed:** | 05/16/16 |

**SB-6-15-SV**

**6E03026-14 (Vapor)**

| Analyte | Result | (ug/L) | MRL | Result | (ppmv) | MRL |
|---|---|---|---|---|---|---|
| 1,3-Dichlorobenzene | <0.020 | ug/L | 0.010 | <0.0033 | ppmv | 0.0017 |
| 1,4-Dichlorobenzene | <0.020 | ug/L | 0.010 | <0.0033 | ppmv | 0.0017 |
| Dichlorodifluoromethane (R12) | <0.020 | ug/L | 0.010 | <0.004 | ppmv | 0.002 |
| 1,1-Dichloroethane | <0.020 | ug/L | 0.010 | <0.0049 | ppmv | 0.0025 |
| 1,2-Dichloroethane (EDC) | <0.020 | ug/L | 0.010 | <0.0049 | ppmv | 0.0025 |
| cis-1,2-Dichloroethylene | <0.020 | ug/L | 0.010 | <0.005 | ppmv | 0.0025 |
| 1,1-Dichloroethylene | <0.020 | ug/L | 0.010 | <0.005 | ppmv | 0.0025 |
| trans-1,2-Dichloroethylene | <0.020 | ug/L | 0.010 | <0.005 | ppmv | 0.0025 |
| 1,2-Dichloropropane | <0.020 | ug/L | 0.010 | <0.0043 | ppmv | 0.0022 |
| trans-1,3-Dichloropropylene | <0.020 | ug/L | 0.010 | <0.0044 | ppmv | 0.0022 |
| cis-1,3-Dichloropropylene | <0.020 | ug/L | 0.010 | <0.0044 | ppmv | 0.0022 |
| Dichlorotetrafluoroethane | <0.020 | ug/L | 0.010 | <0.0029 | ppmv | 0.0014 |
| Diisopropyl ether (DIPE) | <0.020 | ug/L | 0.010 | <0.0048 | ppmv | 0.0024 |
| 1,4-Dioxane | <0.020 | ug/L | 0.010 | <0.0055 | ppmv | 0.0028 |
| Ethanol | <0.020 | ug/L | 0.010 | <0.011 | ppmv | 0.0053 |
| Ethyl Acetate | <0.020 | ug/L | 0.010 | <0.0055 | ppmv | 0.0028 |
| Ethylbenzene | <0.020 | ug/L | 0.010 | <0.0046 | ppmv | 0.0023 |
| Ethyl-tert-Butyl Ether (ETBE) | <0.020 | ug/L | 0.010 | <0.0048 | ppmv | 0.0024 |
| 4-Ethyltoluene | <0.020 | ug/L | 0.010 | <0.0041 | ppmv | 0.002 |
| Heptane | **0.029** | ug/L | 0.010 | **0.0071** | ppmv | 0.0024 |
| Hexachlorobutadiene | <0.020 | ug/L | 0.010 | <0.0019 | ppmv | 0.00094 |

**Viorel Vasile**
Operations Manager

# LABORATORY ANALYSIS RESULTS

| | | | |
|---|---|---|---|
| **Client:** | Stantec (TO) | **AA Project No:** | A732178 |
| **Project No:** | 2057123300 | **Date Received:** | 05/03/16 |
| **Project Name:** | Grayson Power Plant Glendale Phase II | **Date Reported:** | 05/18/16 |
| **Matrix:** | Vapor | **Sampled:** | 05/02/16 |
| **Dilution:** | 2 | **Prepared:** | 05/16/16 |
| **Method:** | VOCs by GCMS EPA TO-15 | **Analyzed:** | 05/16/16 |

**SB-6-15-SV**

**6E03026-14 (Vapor)**

| Analyte | Result | (ug/L) | MRL | Result | (ppmv) | MRL |
|---|---|---|---|---|---|---|
| n-Hexane | **0.064** | ug/L | 0.010 | **0.018** | ppmv | 0.0028 |
| 2-Hexanone (MBK) | <0.020 | ug/L | 0.010 | <0.0049 | ppmv | 0.0024 |
| Isopropanol (IPA) | <0.020 | ug/L | 0.010 | <0.0081 | ppmv | 0.0041 |
| Methyl-tert-Butyl Ether (MTBE) | <0.020 | ug/L | 0.010 | <0.0055 | ppmv | 0.0028 |
| Methylene Chloride | <0.020 | ug/L | 0.010 | <0.0058 | ppmv | 0.0029 |
| 4-Methyl-2-pentanone (MIBK) | <0.020 | ug/L | 0.010 | <0.0049 | ppmv | 0.0024 |
| Naphthalene | <0.020 | ug/L | 0.010 | <0.0038 | ppmv | 0.0019 |
| Propylene | **0.077** | ug/L | 0.010 | **0.045** | ppmv | 0.0058 |
| Styrene | <0.020 | ug/L | 0.010 | <0.0047 | ppmv | 0.0023 |
| 1,1,2,2-Tetrachloroethane | <0.020 | ug/L | 0.010 | <0.0029 | ppmv | 0.0015 |
| Tetrachloroethylene (PCE) | **0.024** | ug/L | 0.010 | **0.0035** | ppmv | 0.0015 |
| Tetrahydrofuran (THF) | <0.020 | ug/L | 0.010 | <0.0068 | ppmv | 0.0034 |
| Toluene | **0.021** | ug/L | 0.010 | **0.0056** | ppmv | 0.0027 |
| 1,2,4-Trichlorobenzene | <0.020 | ug/L | 0.010 | <0.0027 | ppmv | 0.0013 |
| 1,1,2-Trichloroethane | <0.020 | ug/L | 0.010 | <0.0037 | ppmv | 0.0018 |
| 1,1,1-Trichloroethane | <0.020 | ug/L | 0.010 | <0.0037 | ppmv | 0.0018 |
| Trichloroethylene (TCE) | <0.020 | ug/L | 0.010 | <0.0037 | ppmv | 0.0019 |
| Trichlorofluoromethane (R11) | <0.020 | ug/L | 0.010 | <0.0036 | ppmv | 0.0018 |
| 1,1,2-Trichloro-1,2,2-trifluoroethane (R113) | <0.020 | ug/L | 0.010 | <0.0026 | ppmv | 0.0013 |
| 1,3,5-Trimethylbenzene | <0.020 | ug/L | 0.010 | <0.0041 | ppmv | 0.002 |

**Viorel Vasile**
Operations Manager

# LABORATORY ANALYSIS RESULTS

| | | | |
|---|---|---|---|
| **Client:** | Stantec (TO) | **AA Project No:** | A732178 |
| **Project No:** | 2057123300 | **Date Received:** | 05/03/16 |
| **Project Name:** | Grayson Power Plant Glendale Phase II | **Date Reported:** | 05/18/16 |
| **Matrix:** | Vapor | **Sampled:** | 05/02/16 |
| **Dilution:** | 2 | **Prepared:** | 05/16/16 |
| **Method:** | VOCs by GCMS EPA TO-15 | **Analyzed:** | 05/16/16 |

**SB-6-15-SV**

**6E03026-14 (Vapor)**

| Analyte | Result | (ug/L) | MRL | Result | (ppmv) | MRL |
|---|---|---|---|---|---|---|
| 1,2,4-Trimethylbenzene | <0.020 | ug/L | 0.010 | <0.0041 | ppmv | 0.002 |
| 2,2,4-Trimethylpentane | <0.020 | ug/L | 0.010 | <0.0043 | ppmv | 0.0021 |
| Vinyl acetate | <0.020 | ug/L | 0.010 | <0.0057 | ppmv | 0.0028 |
| Vinyl bromide | <0.020 | ug/L | 0.010 | <0.0046 | ppmv | 0.0023 |
| Vinyl chloride | <0.020 | ug/L | 0.010 | <0.0078 | ppmv | 0.0039 |
| o-Xylene | <0.020 | ug/L | 0.010 | <0.0046 | ppmv | 0.0023 |
| m,p-Xylenes | <0.020 | ug/L | 0.010 | <0.0046 | ppmv | 0.0023 |
| 1,2,3-Trichloropropane | <0.020 | ug/L | 0.010 | <0.0033 | ppmv | 0.0017 |
| sec-Butylbenzene | <0.020 | ug/L | 0.010 | <0.0036 | ppmv | 0.0018 |
| Isopropylbenzene | <0.020 | ug/L | 0.010 | <0.0041 | ppmv | 0.002 |
| n-Propylbenzene | <0.020 | ug/L | 0.010 | <0.0041 | ppmv | 0.002 |
| 4-Isopropyltoluene | <0.020 | ug/L | 0.010 | <0.0036 | ppmv | 0.0018 |
| n-Butylbenzene | <0.020 | ug/L | 0.010 | <0.0036 | ppmv | 0.0018 |

| Surrogates | %REC | %REC Limits |
|---|---|---|
| 4-Bromofluorobenzene | 106 % | 70-130 |

**Viorel Vasile**
Operations Manager

# LABORATORY ANALYSIS RESULTS

| | | | |
|---|---|---|---|
| **Client:** | Stantec (TO) | **AA Project No:** | A732178 |
| **Project No:** | 2057123300 | **Date Received:** | 05/03/16 |
| **Project Name:** | Grayson Power Plant Glendale Phase II | **Date Reported:** | 05/18/16 |
| **Matrix:** | Vapor | **Sampled:** | 05/02/16 |
| **Dilution:** | 1 | **Prepared:** | 05/16/16 |
| **Method:** | VOCs by GCMS EPA TO-15 | **Analyzed:** | 05/16/16 |

**SB-6-30-SV**

**6E03026-15 (Vapor)**

| Analyte | Result | (ug/L) | MRL | Result | (ppmv) | MRL |
|---|---|---|---|---|---|---|
| Acetone | **0.021** | ug/L | 0.010 | **0.0088** | ppmv | 0.0042 |
| Allyl chloride | <0.010 | ug/L | 0.010 | <0.0032 | ppmv | 0.0032 |
| tert-Amyl Methyl Ether (TAME) | <0.010 | ug/L | 0.010 | <0.0024 | ppmv | 0.0024 |
| Benzene | <0.010 | ug/L | 0.010 | <0.0031 | ppmv | 0.0031 |
| Benzyl chloride | <0.010 | ug/L | 0.010 | <0.0019 | ppmv | 0.0019 |
| Bromodichloromethane | <0.010 | ug/L | 0.010 | <0.0015 | ppmv | 0.0015 |
| Bromoform | <0.010 | ug/L | 0.010 | <0.00097 | ppmv | 0.00097 |
| Bromomethane | <0.010 | ug/L | 0.010 | <0.0026 | ppmv | 0.0026 |
| 1,3-Butadiene | <0.010 | ug/L | 0.010 | <0.0045 | ppmv | 0.0045 |
| 2-Butanone (MEK) | **0.027** | ug/L | 0.010 | **0.0092** | ppmv | 0.0034 |
| tert-Butyl alcohol (TBA) | <0.010 | ug/L | 0.010 | <0.0033 | ppmv | 0.0033 |
| Carbon Disulfide | <0.010 | ug/L | 0.010 | <0.0032 | ppmv | 0.0032 |
| Carbon Tetrachloride | <0.010 | ug/L | 0.010 | <0.0016 | ppmv | 0.0016 |
| Chlorobenzene | <0.010 | ug/L | 0.010 | <0.0022 | ppmv | 0.0022 |
| Chloroethane | <0.010 | ug/L | 0.010 | <0.0038 | ppmv | 0.0038 |
| Chloroform | **0.029** | ug/L | 0.010 | **0.0059** | ppmv | 0.002 |
| Chloromethane | <0.010 | ug/L | 0.010 | <0.0048 | ppmv | 0.0048 |
| Cyclohexane | <0.010 | ug/L | 0.010 | <0.0029 | ppmv | 0.0029 |
| Dibromochloromethane | <0.010 | ug/L | 0.010 | <0.0012 | ppmv | 0.0012 |
| 1,2-Dibromoethane (EDB) | <0.010 | ug/L | 0.010 | <0.0013 | ppmv | 0.0013 |
| 1,2-Dichlorobenzene | <0.010 | ug/L | 0.010 | <0.0017 | ppmv | 0.0017 |

**Viorel Vasile**
Operations Manager

# LABORATORY ANALYSIS RESULTS

| | | | |
|---|---|---|---|
| **Client:** | Stantec (TO) | **AA Project No:** | A732178 |
| **Project No:** | 2057123300 | **Date Received:** | 05/03/16 |
| **Project Name:** | Grayson Power Plant Glendale Phase II | **Date Reported:** | 05/18/16 |
| **Matrix:** | Vapor | **Sampled:** | 05/02/16 |
| **Dilution:** | 1 | **Prepared:** | 05/16/16 |
| **Method:** | VOCs by GCMS EPA TO-15 | **Analyzed:** | 05/16/16 |

**SB-6-30-SV**

**6E03026-15 (Vapor)**

| Analyte | Result | (ug/L) | MRL | Result | (ppmv) | MRL |
|---|---|---|---|---|---|---|
| 1,3-Dichlorobenzene | <0.010 | ug/L | 0.010 | <0.0017 | ppmv | 0.0017 |
| 1,4-Dichlorobenzene | <0.010 | ug/L | 0.010 | <0.0017 | ppmv | 0.0017 |
| Dichlorodifluoromethane (R12) | <0.010 | ug/L | 0.010 | <0.002 | ppmv | 0.002 |
| 1,1-Dichloroethane | <0.010 | ug/L | 0.010 | <0.0025 | ppmv | 0.0025 |
| 1,2-Dichloroethane (EDC) | <0.010 | ug/L | 0.010 | <0.0025 | ppmv | 0.0025 |
| cis-1,2-Dichloroethylene | <0.010 | ug/L | 0.010 | <0.0025 | ppmv | 0.0025 |
| 1,1-Dichloroethylene | <0.010 | ug/L | 0.010 | <0.0025 | ppmv | 0.0025 |
| trans-1,2-Dichloroethylene | <0.010 | ug/L | 0.010 | <0.0025 | ppmv | 0.0025 |
| 1,2-Dichloropropane | <0.010 | ug/L | 0.010 | <0.0022 | ppmv | 0.0022 |
| trans-1,3-Dichloropropylene | <0.010 | ug/L | 0.010 | <0.0022 | ppmv | 0.0022 |
| cis-1,3-Dichloropropylene | <0.010 | ug/L | 0.010 | <0.0022 | ppmv | 0.0022 |
| Dichlorotetrafluoroethane | <0.010 | ug/L | 0.010 | <0.0014 | ppmv | 0.0014 |
| Diisopropyl ether (DIPE) | <0.010 | ug/L | 0.010 | <0.0024 | ppmv | 0.0024 |
| 1,4-Dioxane | <0.010 | ug/L | 0.010 | <0.0028 | ppmv | 0.0028 |
| Ethanol | <0.010 | ug/L | 0.010 | <0.0053 | ppmv | 0.0053 |
| Ethyl Acetate | <0.010 | ug/L | 0.010 | <0.0028 | ppmv | 0.0028 |
| Ethylbenzene | **0.037** | ug/L | 0.010 | **0.0085** | ppmv | 0.0023 |
| Ethyl-tert-Butyl Ether (ETBE) | <0.010 | ug/L | 0.010 | <0.0024 | ppmv | 0.0024 |
| 4-Ethyltoluene | **0.022** | ug/L | 0.010 | **0.0045** | ppmv | 0.002 |
| Heptane | <0.010 | ug/L | 0.010 | <0.0024 | ppmv | 0.0024 |
| Hexachlorobutadiene | <0.010 | ug/L | 0.010 | <0.00094 | ppmv | 0.00094 |

**Viorel Vasile**
Operations Manager

# LABORATORY ANALYSIS RESULTS

| | | | |
|---|---|---|---|
| **Client:** | Stantec (TO) | **AA Project No:** | A732178 |
| **Project No:** | 2057123300 | **Date Received:** | 05/03/16 |
| **Project Name:** | Grayson Power Plant Glendale Phase II | **Date Reported:** | 05/18/16 |
| **Matrix:** | Vapor | **Sampled:** | 05/02/16 |
| **Dilution:** | 1 | **Prepared:** | 05/16/16 |
| **Method:** | VOCs by GCMS EPA TO-15 | **Analyzed:** | 05/16/16 |

**SB-6-30-SV**

**6E03026-15 (Vapor)**

| Analyte | Result | (ug/L) | MRL | Result | (ppmv) | MRL |
|---|---|---|---|---|---|---|
| n-Hexane | <0.010 | ug/L | 0.010 | <0.0028 | ppmv | 0.0028 |
| 2-Hexanone (MBK) | <0.010 | ug/L | 0.010 | <0.0024 | ppmv | 0.0024 |
| Isopropanol (IPA) | <0.010 | ug/L | 0.010 | <0.0041 | ppmv | 0.0041 |
| Methyl-tert-Butyl Ether (MTBE) | <0.010 | ug/L | 0.010 | <0.0028 | ppmv | 0.0028 |
| Methylene Chloride | <0.010 | ug/L | 0.010 | <0.0029 | ppmv | 0.0029 |
| 4-Methyl-2-pentanone (MIBK) | **0.010** | ug/L | 0.010 | **0.0024** | ppmv | 0.0024 |
| Naphthalene | <0.010 | ug/L | 0.010 | <0.0019 | ppmv | 0.0019 |
| Propylene | <0.010 | ug/L | 0.010 | <0.0058 | ppmv | 0.0058 |
| Styrene | <0.010 | ug/L | 0.010 | <0.0023 | ppmv | 0.0023 |
| 1,1,2,2-Tetrachloroethane | <0.010 | ug/L | 0.010 | <0.0015 | ppmv | 0.0015 |
| Tetrachloroethylene (PCE) | **0.096** | ug/L | 0.010 | **0.014** | ppmv | 0.0015 |
| Tetrahydrofuran (THF) | **0.021** | ug/L | 0.010 | **0.0071** | ppmv | 0.0034 |
| Toluene | **0.088** | ug/L | 0.010 | **0.023** | ppmv | 0.0027 |
| 1,2,4-Trichlorobenzene | <0.010 | ug/L | 0.010 | <0.0013 | ppmv | 0.0013 |
| 1,1,2-Trichloroethane | <0.010 | ug/L | 0.010 | <0.0018 | ppmv | 0.0018 |
| 1,1,1-Trichloroethane | <0.010 | ug/L | 0.010 | <0.0018 | ppmv | 0.0018 |
| Trichloroethylene (TCE) | <0.010 | ug/L | 0.010 | <0.0019 | ppmv | 0.0019 |
| Trichlorofluoromethane (R11) | <0.010 | ug/L | 0.010 | <0.0018 | ppmv | 0.0018 |
| 1,1,2-Trichloro-1,2,2-trifluoroethane (R113) | **0.010** | ug/L | 0.010 | **0.0013** | ppmv | 0.0013 |
| 1,3,5-Trimethylbenzene | **0.036** | ug/L | 0.010 | **0.0073** | ppmv | 0.002 |

**Viorel Vasile**
Operations Manager

# LABORATORY ANALYSIS RESULTS

| | | | |
|---|---|---|---|
| **Client:** | Stantec (TO) | **AA Project No:** | A732178 |
| **Project No:** | 2057123300 | **Date Received:** | 05/03/16 |
| **Project Name:** | Grayson Power Plant Glendale Phase II | **Date Reported:** | 05/18/16 |
| **Matrix:** | Vapor | **Sampled:** | 05/02/16 |
| **Dilution:** | 1 | **Prepared:** | 05/16/16 |
| **Method:** | VOCs by GCMS EPA TO-15 | **Analyzed:** | 05/16/16 |

**SB-6-30-SV**

**6E03026-15 (Vapor)**

| Analyte | Result | (ug/L) | MRL | Result | (ppmv) | MRL |
|---|---|---|---|---|---|---|
| 1,2,4-Trimethylbenzene | **0.084** | ug/L | 0.010 | **0.017** | ppmv | 0.002 |
| 2,2,4-Trimethylpentane | <0.010 | ug/L | 0.010 | <0.0021 | ppmv | 0.0021 |
| Vinyl acetate | <0.010 | ug/L | 0.010 | <0.0028 | ppmv | 0.0028 |
| Vinyl bromide | <0.010 | ug/L | 0.010 | <0.0023 | ppmv | 0.0023 |
| Vinyl chloride | <0.010 | ug/L | 0.010 | <0.0039 | ppmv | 0.0039 |
| o-Xylene | **0.068** | ug/L | 0.010 | **0.016** | ppmv | 0.0023 |
| m,p-Xylenes | **0.16** | ug/L | 0.010 | **0.037** | ppmv | 0.0023 |
| 1,2,3-Trichloropropane | <0.010 | ug/L | 0.010 | <0.0017 | ppmv | 0.0017 |
| sec-Butylbenzene | <0.010 | ug/L | 0.010 | <0.0018 | ppmv | 0.0018 |
| Isopropylbenzene | <0.010 | ug/L | 0.010 | <0.002 | ppmv | 0.002 |
| n-Propylbenzene | **0.016** | ug/L | 0.010 | **0.0033** | ppmv | 0.002 |
| 4-Isopropyltoluene | <0.010 | ug/L | 0.010 | <0.0018 | ppmv | 0.0018 |
| n-Butylbenzene | <0.010 | ug/L | 0.010 | <0.0018 | ppmv | 0.0018 |

| Surrogates | %REC | %REC Limits |
|---|---|---|
| 4-Bromofluorobenzene | 101 % | 70-130 |

**Viorel Vasile**
Operations Manager

# LABORATORY ANALYSIS RESULTS

**Client:** Stantec (TO)
**Project No:** 2057123300
**Project Name:** Grayson Power Plant Glendale Phase II

**AA Project No:** A732178
**Date Received:** 05/03/16
**Date Reported:** 05/18/16

| Analyte | Result | Reporting Limit | Units | Spike Level | Source Result | %REC | %REC Limits | RPD | RPD Limit | Notes |
|---|---|---|---|---|---|---|---|---|---|---|
| **VOCs by GCMS EPA TO-15 - Quality Control** | | | | | | | | | | |
| *Batch B6E1630 - *** DEFAULT PREP **** | | | | | | | | | | |
| **Blank (B6E1630-BLK1)** | | | | Prepared & Analyzed: 05/11/16 | | | | | | |
| Acetone | <0.010 | 0.010 | ug/L | | | | | | | |
| Allyl chloride | <0.010 | 0.010 | ug/L | | | | | | | |
| tert-Amyl Methyl Ether (TAME) | <0.010 | 0.010 | ug/L | | | | | | | |
| Benzene | <0.010 | 0.010 | ug/L | | | | | | | |
| Benzyl chloride | <0.010 | 0.010 | ug/L | | | | | | | |
| Bromodichloromethane | <0.010 | 0.010 | ug/L | | | | | | | |
| Bromoform | <0.010 | 0.010 | ug/L | | | | | | | |
| Bromomethane | <0.010 | 0.010 | ug/L | | | | | | | |
| 1,3-Butadiene | <0.010 | 0.010 | ug/L | | | | | | | |
| 2-Butanone (MEK) | <0.010 | 0.010 | ug/L | | | | | | | |
| tert-Butyl alcohol (TBA) | <0.010 | 0.010 | ug/L | | | | | | | |
| Carbon Disulfide | <0.010 | 0.010 | ug/L | | | | | | | |
| Carbon Tetrachloride | <0.010 | 0.010 | ug/L | | | | | | | |
| Chlorobenzene | <0.010 | 0.010 | ug/L | | | | | | | |
| Chloroethane | <0.010 | 0.010 | ug/L | | | | | | | |
| Chloroform | <0.010 | 0.010 | ug/L | | | | | | | |
| Chloromethane | <0.010 | 0.010 | ug/L | | | | | | | |
| Cyclohexane | <0.010 | 0.010 | ug/L | | | | | | | |
| Dibromochloromethane | <0.010 | 0.010 | ug/L | | | | | | | |
| 1,2-Dibromoethane (EDB) | <0.010 | 0.010 | ug/L | | | | | | | |
| 1,2-Dichlorobenzene | <0.010 | 0.010 | ug/L | | | | | | | |
| 1,3-Dichlorobenzene | <0.010 | 0.010 | ug/L | | | | | | | |
| 1,4-Dichlorobenzene | <0.010 | 0.010 | ug/L | | | | | | | |
| Dichlorodifluoromethane (R12) | <0.010 | 0.010 | ug/L | | | | | | | |
| 1,1-Dichloroethane | <0.010 | 0.010 | ug/L | | | | | | | |
| 1,2-Dichloroethane (EDC) | <0.010 | 0.010 | ug/L | | | | | | | |
| cis-1,2-Dichloroethylene | <0.010 | 0.010 | ug/L | | | | | | | |
| 1,1-Dichloroethylene | <0.010 | 0.010 | ug/L | | | | | | | |
| trans-1,2-Dichloroethylene | <0.010 | 0.010 | ug/L | | | | | | | |
| 1,2-Dichloropropane | <0.010 | 0.010 | ug/L | | | | | | | |
| trans-1,3-Dichloropropylene | <0.010 | 0.010 | ug/L | | | | | | | |

**Viorel Vasile**
Operations Manager

# LABORATORY ANALYSIS RESULTS

**Client:** Stantec (TO)
**Project No:** 2057123300
**Project Name:** Grayson Power Plant Glendale Phase II

**AA Project No:** A732178
**Date Received:** 05/03/16
**Date Reported:** 05/18/16

| Analyte | Result | Reporting Limit | Units | Spike Level | Source Result | %REC | %REC Limits | RPD | RPD Limit | Notes |
|---|---|---|---|---|---|---|---|---|---|---|
| **VOCs by GCMS EPA TO-15 - Quality Control** | | | | | | | | | | |
| *Batch B6E1630 - *** DEFAULT PREP **** | | | | | | | | | | |
| **Blank (B6E1630-BLK1) Continued** | | | | Prepared & Analyzed: 05/11/16 | | | | | | |
| cis-1,3-Dichloropropylene | <0.010 | 0.010 | ug/L | | | | | | | |
| Dichlorotetrafluoroethane | <0.010 | 0.010 | ug/L | | | | | | | |
| Diisopropyl ether (DIPE) | <0.010 | 0.010 | ug/L | | | | | | | |
| 1,4-Dioxane | <0.010 | 0.010 | ug/L | | | | | | | |
| Ethanol | <0.010 | 0.010 | ug/L | | | | | | | |
| Ethyl Acetate | <0.010 | 0.010 | ug/L | | | | | | | |
| Ethylbenzene | <0.010 | 0.010 | ug/L | | | | | | | |
| Ethyl-tert-Butyl Ether (ETBE) | <0.010 | 0.010 | ug/L | | | | | | | |
| 4-Ethyltoluene | <0.010 | 0.010 | ug/L | | | | | | | |
| Heptane | <0.010 | 0.010 | ug/L | | | | | | | |
| Hexachlorobutadiene | <0.010 | 0.010 | ug/L | | | | | | | |
| n-Hexane | <0.010 | 0.010 | ug/L | | | | | | | |
| 2-Hexanone (MBK) | <0.010 | 0.010 | ug/L | | | | | | | |
| Isopropanol (IPA) | <0.010 | 0.010 | ug/L | | | | | | | |
| Methyl-tert-Butyl Ether (MTBE) | <0.010 | 0.010 | ug/L | | | | | | | |
| Methylene Chloride | <0.010 | 0.010 | ug/L | | | | | | | |
| 4-Methyl-2-pentanone (MIBK) | <0.010 | 0.010 | ug/L | | | | | | | |
| Naphthalene | <0.010 | 0.010 | ug/L | | | | | | | |
| Propylene | <0.010 | 0.010 | ug/L | | | | | | | |
| Styrene | <0.010 | 0.010 | ug/L | | | | | | | |
| 1,1,2,2-Tetrachloroethane | <0.010 | 0.010 | ug/L | | | | | | | |
| Tetrachloroethylene (PCE) | <0.010 | 0.010 | ug/L | | | | | | | |
| Tetrahydrofuran (THF) | <0.010 | 0.010 | ug/L | | | | | | | |
| Toluene | <0.010 | 0.010 | ug/L | | | | | | | |
| 1,2,4-Trichlorobenzene | <0.010 | 0.010 | ug/L | | | | | | | |
| 1,1,2-Trichloroethane | <0.010 | 0.010 | ug/L | | | | | | | |
| 1,1,1-Trichloroethane | <0.010 | 0.010 | ug/L | | | | | | | |
| Trichloroethylene (TCE) | <0.010 | 0.010 | ug/L | | | | | | | |
| Trichlorofluoromethane (R11) | <0.010 | 0.010 | ug/L | | | | | | | |
| 1,1,2-Trichloro-1,2,2-trifluoroethane (R113) | <0.010 | 0.010 | ug/L | | | | | | | |
| 1,3,5-Trimethylbenzene | <0.010 | 0.010 | ug/L | | | | | | | |

**Viorel Vasile**
Operations Manager

# LABORATORY ANALYSIS RESULTS

**Client:** Stantec (TO)
**Project No:** 2057123300
**Project Name:** Grayson Power Plant Glendale Phase II

**AA Project No:** A732178
**Date Received:** 05/03/16
**Date Reported:** 05/18/16

| Analyte | Result | Reporting Limit | Units | Spike Level | Source Result | %REC | %REC Limits | RPD | RPD Limit | Notes |
|---|---|---|---|---|---|---|---|---|---|---|
| **VOCs by GCMS EPA TO-15 - Quality Control** | | | | | | | | | | |
| *Batch B6E1630 - *** DEFAULT PREP **** | | | | | | | | | | |
| **Blank (B6E1630-BLK1) Continued** | | | | Prepared & Analyzed: 05/11/16 | | | | | | |
| 1,2,4-Trimethylbenzene | <0.010 | 0.010 | ug/L | | | | | | | |
| 2,2,4-Trimethylpentane | <0.010 | 0.010 | ug/L | | | | | | | |
| Vinyl acetate | <0.010 | 0.010 | ug/L | | | | | | | |
| Vinyl bromide | <0.010 | 0.010 | ug/L | | | | | | | |
| Vinyl chloride | <0.010 | 0.010 | ug/L | | | | | | | |
| o-Xylene | <0.010 | 0.010 | ug/L | | | | | | | |
| m,p-Xylenes | <0.010 | 0.010 | ug/L | | | | | | | |
| 1,2,3-Trichloropropane | <0.010 | 0.010 | ug/L | | | | | | | |
| sec-Butylbenzene | <0.010 | 0.010 | ug/L | | | | | | | |
| Isopropylbenzene | <0.010 | 0.010 | ug/L | | | | | | | |
| n-Propylbenzene | <0.010 | 0.010 | ug/L | | | | | | | |
| 4-Isopropyltoluene | <0.010 | 0.010 | ug/L | | | | | | | |
| n-Butylbenzene | <0.010 | 0.010 | ug/L | | | | | | | |
| *Surrogate: 4-Bromofluorobenzene* | *0.154* | | *ug/L* | *0.14* | | *108* | *70-130* | | | |
| **LCS (B6E1630-BS1)** | | | | Prepared & Analyzed: 05/11/16 | | | | | | |
| Acetone | **0.0235** | 0.010 | ug/L | 0.024 | | 98.8 | 70-130 | | | |
| Benzene | **0.0251** | 0.010 | ug/L | 0.032 | | 78.5 | 70-130 | | | |
| Benzyl chloride | **0.0617** | 0.010 | ug/L | 0.052 | | 119 | 70-130 | | | |
| Bromodichloromethane | **0.0706** | 0.010 | ug/L | 0.067 | | 105 | 70-130 | | | |
| Bromoform | **0.116** | 0.010 | ug/L | 0.10 | | 112 | 70-130 | | | |
| Bromomethane | **0.0295** | 0.010 | ug/L | 0.039 | | 76.1 | 70-130 | | | |
| 2-Butanone (MEK) | **0.0271** | 0.010 | ug/L | 0.029 | | 91.9 | 70-130 | | | |
| Carbon Disulfide | **0.0270** | 0.010 | ug/L | 0.031 | | 86.6 | 70-130 | | | |
| Carbon Tetrachloride | **0.0702** | 0.010 | ug/L | 0.063 | | 112 | 70-130 | | | |
| Chlorobenzene | **0.0452** | 0.010 | ug/L | 0.046 | | 98.1 | 70-130 | | | |
| Chloroethane | **0.0245** | 0.010 | ug/L | 0.026 | | 92.8 | 70-130 | | | |
| Chloroform | **0.0493** | 0.010 | ug/L | 0.049 | | 101 | 70-130 | | | |
| Chloromethane | **0.0201** | 0.010 | ug/L | 0.021 | | 97.5 | 70-130 | | | |
| Dibromochloromethane | **0.0898** | 0.010 | ug/L | 0.085 | | 105 | 70-130 | | | |
| 1,2-Dibromoethane (EDB) | **0.0759** | 0.010 | ug/L | 0.077 | | 98.8 | 70-130 | | | |
| 1,2-Dichlorobenzene | **0.0666** | 0.010 | ug/L | 0.060 | | 111 | 70-130 | | | |

**Viorel Vasile**
Operations Manager

# LABORATORY ANALYSIS RESULTS

**Client:** Stantec (TO)
**Project No:** 2057123300
**Project Name:** Grayson Power Plant Glendale Phase II

**AA Project No:** A732178
**Date Received:** 05/03/16
**Date Reported:** 05/18/16

| Analyte | Result | Reporting Limit | Units | Spike Level | Source Result | %REC | %REC Limits | RPD | RPD Limit | Notes |
|---|---|---|---|---|---|---|---|---|---|---|
| **VOCs by GCMS EPA TO-15 - Quality Control** | | | | | | | | | | |
| *Batch B6E1630 - *** DEFAULT PREP **** | | | | | | | | | | |
| **LCS (B6E1630-BS1) Continued** | | | | Prepared & Analyzed: 05/11/16 | | | | | | |
| 1,3-Dichlorobenzene | **0.0684** | 0.010 | ug/L | 0.060 | | 114 | 70-130 | | | |
| 1,4-Dichlorobenzene | **0.0669** | 0.010 | ug/L | 0.060 | | 111 | 70-130 | | | |
| Dichlorodifluoromethane (R12) | **0.0554** | 0.010 | ug/L | 0.049 | | 112 | 70-130 | | | |
| 1,1-Dichloroethane | **0.0379** | 0.010 | ug/L | 0.040 | | 93.6 | 70-130 | | | |
| 1,2-Dichloroethane (EDC) | **0.0451** | 0.010 | ug/L | 0.040 | | 112 | 70-130 | | | |
| cis-1,2-Dichloroethylene | **0.0377** | 0.010 | ug/L | 0.040 | | 95.1 | 70-130 | | | |
| 1,1-Dichloroethylene | **0.0406** | 0.010 | ug/L | 0.040 | | 102 | 70-130 | | | |
| trans-1,2-Dichloroethylene | **0.0382** | 0.010 | ug/L | 0.040 | | 96.4 | 70-130 | | | |
| 1,2-Dichloropropane | **0.0427** | 0.010 | ug/L | 0.046 | | 92.4 | 70-130 | | | |
| trans-1,3-Dichloropropylene | **0.0442** | 0.010 | ug/L | 0.045 | | 97.3 | 70-130 | | | |
| cis-1,3-Dichloropropylene | **0.0426** | 0.010 | ug/L | 0.045 | | 93.8 | 70-130 | | | |
| Dichlorotetrafluoroethane | **0.0823** | 0.010 | ug/L | 0.070 | | 118 | 70-130 | | | |
| Ethylbenzene | **0.0452** | 0.010 | ug/L | 0.043 | | 104 | 70-130 | | | |
| 4-Ethyltoluene | **0.0545** | 0.010 | ug/L | 0.049 | | 111 | 70-130 | | | |
| Hexachlorobutadiene | **0.119** | 0.010 | ug/L | 0.11 | | 112 | 70-130 | | | |
| 2-Hexanone (MBK) | **0.0423** | 0.010 | ug/L | 0.041 | | 103 | 70-130 | | | |
| Isopropanol (IPA) | **0.0244** | 0.010 | ug/L | 0.025 | | 99.2 | 70-130 | | | |
| Methylene Chloride | **0.0329** | 0.010 | ug/L | 0.035 | | 94.7 | 70-130 | | | |
| 4-Methyl-2-pentanone (MIBK) | **0.0407** | 0.010 | ug/L | 0.041 | | 99.3 | 70-130 | | | |
| Styrene | **0.0411** | 0.010 | ug/L | 0.043 | | 96.4 | 70-130 | | | |
| 1,1,2,2-Tetrachloroethane | **0.0665** | 0.010 | ug/L | 0.069 | | 96.9 | 70-130 | | | |
| Tetrachloroethylene (PCE) | **0.0740** | 0.010 | ug/L | 0.068 | | 109 | 70-130 | | | |
| Toluene | **0.0367** | 0.010 | ug/L | 0.038 | | 97.3 | 70-130 | | | |
| 1,2,4-Trichlorobenzene | **0.0856** | 0.010 | ug/L | 0.074 | | 115 | 70-130 | | | |
| 1,1,2-Trichloroethane | **0.0533** | 0.010 | ug/L | 0.055 | | 97.7 | 70-130 | | | |
| 1,1,1-Trichloroethane | **0.0579** | 0.010 | ug/L | 0.055 | | 106 | 70-130 | | | |
| Trichloroethylene (TCE) | **0.0515** | 0.010 | ug/L | 0.054 | | 95.9 | 70-130 | | | |
| Trichlorofluoromethane (R11) | **0.0609** | 0.010 | ug/L | 0.056 | | 108 | 70-130 | | | |
| 1,1,2-Trichloro-1,2,2-trifluoroethane (R113) | **0.0730** | 0.010 | ug/L | 0.077 | | 95.2 | 70-130 | | | |
| 1,3,5-Trimethylbenzene | **0.0519** | 0.010 | ug/L | 0.049 | | 106 | 70-130 | | | |
| 1,2,4-Trimethylbenzene | **0.0540** | 0.010 | ug/L | 0.049 | | 110 | 70-130 | | | |

**Viorel Vasile**
Operations Manager

# LABORATORY ANALYSIS RESULTS

**Client:** Stantec (TO)
**Project No:** 2057123300
**Project Name:** Grayson Power Plant Glendale Phase II

**AA Project No:** A732178
**Date Received:** 05/03/16
**Date Reported:** 05/18/16

| Analyte | Result | Reporting Limit | Units | Spike Level | Source Result | %REC | %REC Limits | RPD | RPD Limit | Notes |
|---|---|---|---|---|---|---|---|---|---|---|
| **VOCs by GCMS EPA TO-15 - Quality Control** | | | | | | | | | | |
| *Batch B6E1630 - *** DEFAULT PREP **** | | | | | | | | | | |
| **LCS (B6E1630-BS1) Continued** | | | | Prepared & Analyzed: 05/11/16 | | | | | | |
| Vinyl acetate | **0.0345** | 0.010 | ug/L | 0.035 | | 97.9 | 70-130 | | | |
| Vinyl chloride | **0.0251** | 0.010 | ug/L | 0.026 | | 98.3 | 70-130 | | | |
| o-Xylene | **0.0458** | 0.010 | ug/L | 0.043 | | 106 | 70-130 | | | |
| m,p-Xylenes | **0.0924** | 0.010 | ug/L | 0.087 | | 106 | 70-130 | | | |
| 1,2,3-Trichloropropane | **0.0557** | 0.010 | ug/L | 0.060 | | 92.3 | 70-130 | | | |
| sec-Butylbenzene | **0.0532** | 0.010 | ug/L | 0.055 | | 96.9 | 70-130 | | | |
| Isopropylbenzene | **0.0457** | 0.010 | ug/L | 0.049 | | 92.9 | 70-130 | | | |
| n-Propylbenzene | **0.0486** | 0.010 | ug/L | 0.049 | | 98.9 | 70-130 | | | |
| 4-Isopropyltoluene | **0.0543** | 0.010 | ug/L | 0.055 | | 99.0 | 70-130 | | | |
| *Surrogate: 4-Bromofluorobenzene* | *0.150* | | *ug/L* | *0.14* | | *105* | *70-130* | | | |
| **LCS Dup (B6E1630-BSD1)** | | | | Prepared: 05/11/16 Analyzed: 05/12/16 | | | | | | |
| Acetone | **0.0243** | 0.010 | ug/L | 0.024 | | 102 | 70-130 | 3.48 | 30 | |
| Benzene | **0.0271** | 0.010 | ug/L | 0.032 | | 84.9 | 70-130 | 7.83 | 30 | |
| Benzyl chloride | **0.0640** | 0.010 | ug/L | 0.052 | | 124 | 70-130 | 3.62 | 30 | |
| Bromodichloromethane | **0.0744** | 0.010 | ug/L | 0.067 | | 111 | 70-130 | 5.36 | 30 | |
| Bromoform | **0.126** | 0.010 | ug/L | 0.10 | | 122 | 70-130 | 8.64 | 30 | |
| Bromomethane | **0.0274** | 0.010 | ug/L | 0.039 | | 70.5 | 70-130 | 7.64 | 30 | |
| 2-Butanone (MEK) | **0.0280** | 0.010 | ug/L | 0.029 | | 94.8 | 70-130 | 3.11 | 30 | |
| Carbon Disulfide | **0.0289** | 0.010 | ug/L | 0.031 | | 92.8 | 70-130 | 6.91 | 30 | |
| Carbon Tetrachloride | **0.0740** | 0.010 | ug/L | 0.063 | | 118 | 70-130 | 5.24 | 30 | |
| Chlorobenzene | **0.0493** | 0.010 | ug/L | 0.046 | | 107 | 70-130 | 8.68 | 30 | |
| Chloroethane | **0.0178** | 0.010 | ug/L | 0.026 | | 67.6 | 70-130 | 31.4 | 30 | *** |
| Chloroform | **0.0503** | 0.010 | ug/L | 0.049 | | 103 | 70-130 | 2.06 | 30 | |
| Chloromethane | **0.0189** | 0.010 | ug/L | 0.021 | | 91.5 | 70-130 | 6.35 | 30 | |
| Dibromochloromethane | **0.0998** | 0.010 | ug/L | 0.085 | | 117 | 70-130 | 10.5 | 30 | |
| 1,2-Dibromoethane (EDB) | **0.0822** | 0.010 | ug/L | 0.077 | | 107 | 70-130 | 7.97 | 30 | |
| 1,2-Dichlorobenzene | **0.0735** | 0.010 | ug/L | 0.060 | | 122 | 70-130 | 9.96 | 30 | |
| 1,3-Dichlorobenzene | **0.0756** | 0.010 | ug/L | 0.060 | | 126 | 70-130 | 10.0 | 30 | |
| 1,4-Dichlorobenzene | **0.0740** | 0.010 | ug/L | 0.060 | | 123 | 70-130 | 10.2 | 30 | |
| Dichlorodifluoromethane (R12) | **0.0558** | 0.010 | ug/L | 0.049 | | 113 | 70-130 | 0.800 | 30 | |
| 1,1-Dichloroethane | **0.0406** | 0.010 | ug/L | 0.040 | | 100 | 70-130 | 6.81 | 30 | |

**Viorel Vasile**
Operations Manager

# LABORATORY ANALYSIS RESULTS

**Client:** Stantec (TO)
**Project No:** 2057123300
**Project Name:** Grayson Power Plant Glendale Phase II

**AA Project No:** A732178
**Date Received:** 05/03/16
**Date Reported:** 05/18/16

| Analyte | Result | Reporting Limit | Units | Spike Level | Source Result | %REC | %REC Limits | RPD | RPD Limit | Notes |
|---|---|---|---|---|---|---|---|---|---|---|
| **VOCs by GCMS EPA TO-15 - Quality Control** | | | | | | | | | | |
| *Batch B6E1630 - *** DEFAULT PREP **** | | | | | | | | | | |
| **LCS Dup (B6E1630-BSD1) Continued** | | | | Prepared: 05/11/16 Analyzed: 05/12/16 | | | | | | |
| 1,2-Dichloroethane (EDC) | **0.0450** | 0.010 | ug/L | 0.040 | | 111 | 70-130 | 0.359 | 30 | |
| cis-1,2-Dichloroethylene | **0.0393** | 0.010 | ug/L | 0.040 | | 99.1 | 70-130 | 4.12 | 30 | |
| 1,1-Dichloroethylene | **0.0415** | 0.010 | ug/L | 0.040 | | 105 | 70-130 | 2.22 | 30 | |
| trans-1,2-Dichloroethylene | **0.0403** | 0.010 | ug/L | 0.040 | | 102 | 70-130 | 5.25 | 30 | |
| 1,2-Dichloropropane | **0.0457** | 0.010 | ug/L | 0.046 | | 98.8 | 70-130 | 6.69 | 30 | |
| trans-1,3-Dichloropropylene | **0.0474** | 0.010 | ug/L | 0.045 | | 104 | 70-130 | 7.04 | 30 | |
| cis-1,3-Dichloropropylene | **0.0478** | 0.010 | ug/L | 0.045 | | 105 | 70-130 | 11.6 | 30 | |
| Dichlorotetrafluoroethane | **0.0819** | 0.010 | ug/L | 0.070 | | 117 | 70-130 | 0.426 | 30 | |
| Ethylbenzene | **0.0500** | 0.010 | ug/L | 0.043 | | 115 | 70-130 | 9.94 | 30 | |
| 4-Ethyltoluene | **0.0610** | 0.010 | ug/L | 0.049 | | 124 | 70-130 | 11.2 | 30 | |
| Hexachlorobutadiene | **0.123** | 0.010 | ug/L | 0.11 | | 115 | 70-130 | 3.08 | 30 | |
| 2-Hexanone (MBK) | **0.0448** | 0.010 | ug/L | 0.041 | | 109 | 70-130 | 5.74 | 30 | |
| Isopropanol (IPA) | **0.0253** | 0.010 | ug/L | 0.025 | | 103 | 70-130 | 3.66 | 30 | |
| Methylene Chloride | **0.0353** | 0.010 | ug/L | 0.035 | | 102 | 70-130 | 6.93 | 30 | |
| 4-Methyl-2-pentanone (MIBK) | **0.0441** | 0.010 | ug/L | 0.041 | | 108 | 70-130 | 8.02 | 30 | |
| Styrene | **0.0451** | 0.010 | ug/L | 0.043 | | 106 | 70-130 | 9.30 | 30 | |
| 1,1,2,2-Tetrachloroethane | **0.0738** | 0.010 | ug/L | 0.069 | | 108 | 70-130 | 10.4 | 30 | |
| Tetrachloroethylene (PCE) | **0.0795** | 0.010 | ug/L | 0.068 | | 117 | 70-130 | 7.16 | 30 | |
| Toluene | **0.0403** | 0.010 | ug/L | 0.038 | | 107 | 70-130 | 9.40 | 30 | |
| 1,2,4-Trichlorobenzene | **0.0864** | 0.010 | ug/L | 0.074 | | 116 | 70-130 | 0.950 | 30 | |
| 1,1,2-Trichloroethane | **0.0581** | 0.010 | ug/L | 0.055 | | 106 | 70-130 | 8.62 | 30 | |
| 1,1,1-Trichloroethane | **0.0596** | 0.010 | ug/L | 0.055 | | 109 | 70-130 | 2.88 | 30 | |
| Trichloroethylene (TCE) | **0.0573** | 0.010 | ug/L | 0.054 | | 107 | 70-130 | 10.7 | 30 | |
| Trichlorofluoromethane (R11) | **0.0630** | 0.010 | ug/L | 0.056 | | 112 | 70-130 | 3.36 | 30 | |
| 1,1,2-Trichloro-1,2,2-trifluoroethane (R113) | **0.0797** | 0.010 | ug/L | 0.077 | | 104 | 70-130 | 8.84 | 30 | |
| 1,3,5-Trimethylbenzene | **0.0581** | 0.010 | ug/L | 0.049 | | 118 | 70-130 | 11.2 | 30 | |
| 1,2,4-Trimethylbenzene | **0.0588** | 0.010 | ug/L | 0.049 | | 120 | 70-130 | 8.45 | 30 | |
| Vinyl acetate | **0.0360** | 0.010 | ug/L | 0.035 | | 102 | 70-130 | 4.40 | 30 | |
| Vinyl chloride | **0.0253** | 0.010 | ug/L | 0.026 | | 99.0 | 70-130 | 0.710 | 30 | |
| o-Xylene | **0.0507** | 0.010 | ug/L | 0.043 | | 117 | 70-130 | 10.2 | 30 | |
| m,p-Xylenes | **0.104** | 0.010 | ug/L | 0.087 | | 119 | 70-130 | 11.4 | 30 | |

**Viorel Vasile**
Operations Manager

# LABORATORY ANALYSIS RESULTS

**Client:** Stantec (TO)
**Project No:** 2057123300
**Project Name:** Grayson Power Plant Glendale Phase II

**AA Project No:** A732178
**Date Received:** 05/03/16
**Date Reported:** 05/18/16

| Analyte | Result | Reporting Limit | Units | Spike Level | Source Result | %REC | %REC Limits | RPD | RPD Limit | Notes |
|---|---|---|---|---|---|---|---|---|---|---|
| **VOCs by GCMS EPA TO-15 - Quality Control** | | | | | | | | | | |
| *Batch B6E1630 - *** DEFAULT PREP **** | | | | | | | | | | |
| **LCS Dup (B6E1630-BSD1) Continued** | | | | Prepared: 05/11/16 Analyzed: 05/12/16 | | | | | | |
| 1,2,3-Trichloropropane | **0.0633** | 0.010 | ug/L | 0.060 | | 105 | 70-130 | 12.9 | 30 | |
| sec-Butylbenzene | **0.0597** | 0.010 | ug/L | 0.055 | | 109 | 70-130 | 11.6 | 30 | |
| Isopropylbenzene | **0.0508** | 0.010 | ug/L | 0.049 | | 103 | 70-130 | 10.6 | 30 | |
| n-Propylbenzene | **0.0533** | 0.010 | ug/L | 0.049 | | 108 | 70-130 | 9.17 | 30 | |
| 4-Isopropyltoluene | **0.0620** | 0.010 | ug/L | 0.055 | | 113 | 70-130 | 13.1 | 30 | |
| *Surrogate: 4-Bromofluorobenzene* | *0.150* | | *ug/L* | *0.14* | | *105* | *70-130* | | | |
| *Batch B6E1631 - *** DEFAULT PREP **** | | | | | | | | | | |
| **Blank (B6E1631-BLK1)** | | | | Prepared & Analyzed: 05/12/16 | | | | | | |
| Acetone | <0.010 | 0.010 | ug/L | | | | | | | |
| Allyl chloride | <0.010 | 0.010 | ug/L | | | | | | | |
| tert-Amyl Methyl Ether (TAME) | <0.010 | 0.010 | ug/L | | | | | | | |
| Benzene | <0.010 | 0.010 | ug/L | | | | | | | |
| Benzyl chloride | <0.010 | 0.010 | ug/L | | | | | | | |
| Bromodichloromethane | <0.010 | 0.010 | ug/L | | | | | | | |
| Bromoform | <0.010 | 0.010 | ug/L | | | | | | | |
| Bromomethane | <0.010 | 0.010 | ug/L | | | | | | | |
| 1,3-Butadiene | <0.010 | 0.010 | ug/L | | | | | | | |
| 2-Butanone (MEK) | <0.010 | 0.010 | ug/L | | | | | | | |
| tert-Butyl alcohol (TBA) | <0.010 | 0.010 | ug/L | | | | | | | |
| Carbon Disulfide | <0.010 | 0.010 | ug/L | | | | | | | |
| Carbon Tetrachloride | <0.010 | 0.010 | ug/L | | | | | | | |
| Chlorobenzene | <0.010 | 0.010 | ug/L | | | | | | | |
| Chloroethane | <0.010 | 0.010 | ug/L | | | | | | | |
| Chloroform | <0.010 | 0.010 | ug/L | | | | | | | |
| Chloromethane | <0.010 | 0.010 | ug/L | | | | | | | |
| Cyclohexane | <0.010 | 0.010 | ug/L | | | | | | | |
| Dibromochloromethane | <0.010 | 0.010 | ug/L | | | | | | | |
| 1,2-Dibromoethane (EDB) | <0.010 | 0.010 | ug/L | | | | | | | |
| 1,2-Dichlorobenzene | <0.010 | 0.010 | ug/L | | | | | | | |
| 1,3-Dichlorobenzene | <0.010 | 0.010 | ug/L | | | | | | | |
| 1,4-Dichlorobenzene | <0.010 | 0.010 | ug/L | | | | | | | |

**Viorel Vasile**
Operations Manager

# LABORATORY ANALYSIS RESULTS

**Client:** Stantec (TO)
**Project No:** 2057123300
**Project Name:** Grayson Power Plant Glendale Phase II

**AA Project No:** A732178
**Date Received:** 05/03/16
**Date Reported:** 05/18/16

| Analyte | Result | Reporting Limit | Units | Spike Level | Source Result | %REC | %REC Limits | RPD | RPD Limit | Notes |
|---|---|---|---|---|---|---|---|---|---|---|
| **VOCs by GCMS EPA TO-15 - Quality Control** | | | | | | | | | | |
| *Batch B6E1631 - *** DEFAULT PREP **** | | | | | | | | | | |
| **Blank (B6E1631-BLK1) Continued** | | | | Prepared & Analyzed: 05/12/16 | | | | | | |
| Dichlorodifluoromethane (R12) | <0.010 | 0.010 | ug/L | | | | | | | |
| 1,1-Dichloroethane | <0.010 | 0.010 | ug/L | | | | | | | |
| 1,2-Dichloroethane (EDC) | <0.010 | 0.010 | ug/L | | | | | | | |
| cis-1,2-Dichloroethylene | <0.010 | 0.010 | ug/L | | | | | | | |
| 1,1-Dichloroethylene | <0.010 | 0.010 | ug/L | | | | | | | |
| trans-1,2-Dichloroethylene | <0.010 | 0.010 | ug/L | | | | | | | |
| 1,2-Dichloropropane | <0.010 | 0.010 | ug/L | | | | | | | |
| trans-1,3-Dichloropropylene | <0.010 | 0.010 | ug/L | | | | | | | |
| cis-1,3-Dichloropropylene | <0.010 | 0.010 | ug/L | | | | | | | |
| Dichlorotetrafluoroethane | <0.010 | 0.010 | ug/L | | | | | | | |
| Diisopropyl ether (DIPE) | <0.010 | 0.010 | ug/L | | | | | | | |
| 1,4-Dioxane | <0.010 | 0.010 | ug/L | | | | | | | |
| Ethanol | <0.010 | 0.010 | ug/L | | | | | | | |
| Ethyl Acetate | <0.010 | 0.010 | ug/L | | | | | | | |
| Ethylbenzene | <0.010 | 0.010 | ug/L | | | | | | | |
| Ethyl-tert-Butyl Ether (ETBE) | <0.010 | 0.010 | ug/L | | | | | | | |
| 4-Ethyltoluene | <0.010 | 0.010 | ug/L | | | | | | | |
| Heptane | <0.010 | 0.010 | ug/L | | | | | | | |
| Hexachlorobutadiene | <0.010 | 0.010 | ug/L | | | | | | | |
| n-Hexane | <0.010 | 0.010 | ug/L | | | | | | | |
| 2-Hexanone (MBK) | <0.010 | 0.010 | ug/L | | | | | | | |
| Isopropanol (IPA) | <0.010 | 0.010 | ug/L | | | | | | | |
| Methyl-tert-Butyl Ether (MTBE) | <0.010 | 0.010 | ug/L | | | | | | | |
| Methylene Chloride | <0.010 | 0.010 | ug/L | | | | | | | |
| 4-Methyl-2-pentanone (MIBK) | <0.010 | 0.010 | ug/L | | | | | | | |
| Naphthalene | <0.010 | 0.010 | ug/L | | | | | | | |
| Propylene | <0.010 | 0.010 | ug/L | | | | | | | |
| Styrene | <0.010 | 0.010 | ug/L | | | | | | | |
| 1,1,2,2-Tetrachloroethane | <0.010 | 0.010 | ug/L | | | | | | | |
| Tetrachloroethylene (PCE) | <0.010 | 0.010 | ug/L | | | | | | | |
| Tetrahydrofuran (THF) | <0.010 | 0.010 | ug/L | | | | | | | |

**Viorel Vasile**
Operations Manager

# LABORATORY ANALYSIS RESULTS

**Client:** Stantec (TO)
**Project No:** 2057123300
**Project Name:** Grayson Power Plant Glendale Phase II

**AA Project No:** A732178
**Date Received:** 05/03/16
**Date Reported:** 05/18/16

| Analyte | Result | Reporting Limit | Units | Spike Level | Source Result | %REC | %REC Limits | RPD | RPD Limit | Notes |
|---|---|---|---|---|---|---|---|---|---|---|
| **VOCs by GCMS EPA TO-15 - Quality Control** | | | | | | | | | | |
| *Batch B6E1631 - *** DEFAULT PREP **** | | | | | | | | | | |
| **Blank (B6E1631-BLK1) Continued** | | | | Prepared & Analyzed: 05/12/16 | | | | | | |
| Toluene | <0.010 | 0.010 | ug/L | | | | | | | |
| 1,2,4-Trichlorobenzene | <0.010 | 0.010 | ug/L | | | | | | | |
| 1,1,2-Trichloroethane | <0.010 | 0.010 | ug/L | | | | | | | |
| 1,1,1-Trichloroethane | <0.010 | 0.010 | ug/L | | | | | | | |
| Trichloroethylene (TCE) | <0.010 | 0.010 | ug/L | | | | | | | |
| Trichlorofluoromethane (R11) | <0.010 | 0.010 | ug/L | | | | | | | |
| 1,1,2-Trichloro-1,2,2-trifluoroethane (R113) | <0.010 | 0.010 | ug/L | | | | | | | |
| 1,3,5-Trimethylbenzene | <0.010 | 0.010 | ug/L | | | | | | | |
| 1,2,4-Trimethylbenzene | <0.010 | 0.010 | ug/L | | | | | | | |
| 2,2,4-Trimethylpentane | <0.010 | 0.010 | ug/L | | | | | | | |
| Vinyl acetate | <0.010 | 0.010 | ug/L | | | | | | | |
| Vinyl bromide | <0.010 | 0.010 | ug/L | | | | | | | |
| Vinyl chloride | <0.010 | 0.010 | ug/L | | | | | | | |
| o-Xylene | <0.010 | 0.010 | ug/L | | | | | | | |
| m,p-Xylenes | <0.010 | 0.010 | ug/L | | | | | | | |
| 1,2,3-Trichloropropane | <0.010 | 0.010 | ug/L | | | | | | | |
| sec-Butylbenzene | <0.010 | 0.010 | ug/L | | | | | | | |
| Isopropylbenzene | <0.010 | 0.010 | ug/L | | | | | | | |
| n-Propylbenzene | <0.010 | 0.010 | ug/L | | | | | | | |
| 4-Isopropyltoluene | <0.010 | 0.010 | ug/L | | | | | | | |
| n-Butylbenzene | <0.010 | 0.010 | ug/L | | | | | | | |
| *Surrogate: 4-Bromofluorobenzene* | *0.153* | | *ug/L* | *0.14* | | *107* | *70-130* | | | |
| **LCS (B6E1631-BS1)** | | | | Prepared & Analyzed: 05/12/16 | | | | | | |
| Acetone | **0.0252** | 0.010 | ug/L | 0.024 | | 106 | 70-130 | | | |
| Benzene | **0.0275** | 0.010 | ug/L | 0.032 | | 86.0 | 70-130 | | | |
| Benzyl chloride | **0.0663** | 0.010 | ug/L | 0.052 | | 128 | 70-130 | | | |
| Bromodichloromethane | **0.0787** | 0.010 | ug/L | 0.067 | | 117 | 70-130 | | | |
| Bromoform | **0.125** | 0.010 | ug/L | 0.10 | | 121 | 70-130 | | | |
| Bromomethane | **0.0309** | 0.010 | ug/L | 0.039 | | 79.5 | 70-130 | | | |
| 2-Butanone (MEK) | **0.0292** | 0.010 | ug/L | 0.029 | | 99.1 | 70-130 | | | |

**Viorel Vasile**
Operations Manager

# LABORATORY ANALYSIS RESULTS

**Client:** Stantec (TO)
**Project No:** 2057123300
**Project Name:** Grayson Power Plant Glendale Phase II

**AA Project No:** A732178
**Date Received:** 05/03/16
**Date Reported:** 05/18/16

| Analyte | Result | Reporting Limit | Units | Spike Level | Source Result | %REC | %REC Limits | RPD | RPD Limit | Notes |
|---|---|---|---|---|---|---|---|---|---|---|
| **VOCs by GCMS EPA TO-15 - Quality Control** | | | | | | | | | | |
| *Batch B6E1631 - *** DEFAULT PREP **** | | | | | | | | | | |
| **LCS (B6E1631-BS1) Continued** | | | | Prepared & Analyzed: 05/12/16 | | | | | | |
| Carbon Disulfide | **0.0295** | 0.010 | ug/L | 0.031 | | 94.8 | 70-130 | | | |
| Carbon Tetrachloride | **0.0772** | 0.010 | ug/L | 0.063 | | 123 | 70-130 | | | |
| Chlorobenzene | **0.0481** | 0.010 | ug/L | 0.046 | | 104 | 70-130 | | | |
| Chloroethane | **0.0196** | 0.010 | ug/L | 0.026 | | 74.3 | 70-130 | | | |
| Chloroform | **0.0536** | 0.010 | ug/L | 0.049 | | 110 | 70-130 | | | |
| Chloromethane | **0.0210** | 0.010 | ug/L | 0.021 | | 102 | 70-130 | | | |
| Dibromochloromethane | **0.0997** | 0.010 | ug/L | 0.085 | | 117 | 70-130 | | | |
| 1,2-Dibromoethane (EDB) | **0.0828** | 0.010 | ug/L | 0.077 | | 108 | 70-130 | | | |
| 1,2-Dichlorobenzene | **0.0706** | 0.010 | ug/L | 0.060 | | 117 | 70-130 | | | |
| 1,3-Dichlorobenzene | **0.0744** | 0.010 | ug/L | 0.060 | | 124 | 70-130 | | | |
| 1,4-Dichlorobenzene | **0.0711** | 0.010 | ug/L | 0.060 | | 118 | 70-130 | | | |
| Dichlorodifluoromethane (R12) | **0.0606** | 0.010 | ug/L | 0.049 | | 123 | 70-130 | | | |
| 1,1-Dichloroethane | **0.0424** | 0.010 | ug/L | 0.040 | | 105 | 70-130 | | | |
| 1,2-Dichloroethane (EDC) | **0.0487** | 0.010 | ug/L | 0.040 | | 120 | 70-130 | | | |
| cis-1,2-Dichloroethylene | **0.0416** | 0.010 | ug/L | 0.040 | | 105 | 70-130 | | | |
| 1,1-Dichloroethylene | **0.0439** | 0.010 | ug/L | 0.040 | | 111 | 70-130 | | | |
| trans-1,2-Dichloroethylene | **0.0414** | 0.010 | ug/L | 0.040 | | 104 | 70-130 | | | |
| 1,2-Dichloropropane | **0.0460** | 0.010 | ug/L | 0.046 | | 99.5 | 70-130 | | | |
| trans-1,3-Dichloropropylene | **0.0489** | 0.010 | ug/L | 0.045 | | 108 | 70-130 | | | |
| cis-1,3-Dichloropropylene | **0.0477** | 0.010 | ug/L | 0.045 | | 105 | 70-130 | | | |
| Dichlorotetrafluoroethane | **0.0884** | 0.010 | ug/L | 0.070 | | 126 | 70-130 | | | |
| Ethylbenzene | **0.0486** | 0.010 | ug/L | 0.043 | | 112 | 70-130 | | | |
| 4-Ethyltoluene | **0.0587** | 0.010 | ug/L | 0.049 | | 119 | 70-130 | | | |
| Hexachlorobutadiene | **0.130** | 0.010 | ug/L | 0.11 | | 122 | 70-130 | | | |
| 2-Hexanone (MBK) | **0.0474** | 0.010 | ug/L | 0.041 | | 116 | 70-130 | | | |
| Isopropanol (IPA) | **0.0270** | 0.010 | ug/L | 0.025 | | 110 | 70-130 | | | |
| Methylene Chloride | **0.0374** | 0.010 | ug/L | 0.035 | | 108 | 70-130 | | | |
| 4-Methyl-2-pentanone (MIBK) | **0.0453** | 0.010 | ug/L | 0.041 | | 111 | 70-130 | | | |
| Styrene | **0.0439** | 0.010 | ug/L | 0.043 | | 103 | 70-130 | | | |
| 1,1,2,2-Tetrachloroethane | **0.0723** | 0.010 | ug/L | 0.069 | | 105 | 70-130 | | | |
| Tetrachloroethylene (PCE) | **0.0801** | 0.010 | ug/L | 0.068 | | 118 | 70-130 | | | |

**Viorel Vasile**
Operations Manager

# LABORATORY ANALYSIS RESULTS

**Client:** Stantec (TO)
**Project No:** 2057123300
**Project Name:** Grayson Power Plant Glendale Phase II

**AA Project No:** A732178
**Date Received:** 05/03/16
**Date Reported:** 05/18/16

| Analyte | Result | Reporting Limit | Units | Spike Level | Source Result | %REC | %REC Limits | RPD | RPD Limit | Notes |
|---|---|---|---|---|---|---|---|---|---|---|
| **VOCs by GCMS EPA TO-15 - Quality Control** | | | | | | | | | | |
| *Batch B6E1631 - *** DEFAULT PREP **** | | | | | | | | | | |
| **LCS (B6E1631-BS1) Continued** | | | | Prepared & Analyzed: 05/12/16 | | | | | | |
| Toluene | **0.0398** | 0.010 | ug/L | 0.038 | | 106 | 70-130 | | | |
| 1,2,4-Trichlorobenzene | **0.0926** | 0.010 | ug/L | 0.074 | | 125 | 70-130 | | | |
| 1,1,2-Trichloroethane | **0.0583** | 0.010 | ug/L | 0.055 | | 107 | 70-130 | | | |
| 1,1,1-Trichloroethane | **0.0633** | 0.010 | ug/L | 0.055 | | 116 | 70-130 | | | |
| Trichloroethylene (TCE) | **0.0560** | 0.010 | ug/L | 0.054 | | 104 | 70-130 | | | |
| Trichlorofluoromethane (R11) | **0.0673** | 0.010 | ug/L | 0.056 | | 120 | 70-130 | | | |
| 1,1,2-Trichloro-1,2,2-trifluoroethane (R113) | **0.0796** | 0.010 | ug/L | 0.077 | | 104 | 70-130 | | | |
| 1,3,5-Trimethylbenzene | **0.0569** | 0.010 | ug/L | 0.049 | | 116 | 70-130 | | | |
| 1,2,4-Trimethylbenzene | **0.0570** | 0.010 | ug/L | 0.049 | | 116 | 70-130 | | | |
| Vinyl acetate | **0.0370** | 0.010 | ug/L | 0.035 | | 105 | 70-130 | | | |
| Vinyl chloride | **0.0279** | 0.010 | ug/L | 0.026 | | 109 | 70-130 | | | |
| o-Xylene | **0.0485** | 0.010 | ug/L | 0.043 | | 112 | 70-130 | | | |
| m,p-Xylenes | **0.0998** | 0.010 | ug/L | 0.087 | | 115 | 70-130 | | | |
| 1,2,3-Trichloropropane | **0.0604** | 0.010 | ug/L | 0.060 | | 100 | 70-130 | | | |
| sec-Butylbenzene | **0.0581** | 0.010 | ug/L | 0.055 | | 106 | 70-130 | | | |
| Isopropylbenzene | **0.0501** | 0.010 | ug/L | 0.049 | | 102 | 70-130 | | | |
| n-Propylbenzene | **0.0524** | 0.010 | ug/L | 0.049 | | 107 | 70-130 | | | |
| 4-Isopropyltoluene | **0.0593** | 0.010 | ug/L | 0.055 | | 108 | 70-130 | | | |
| *Surrogate: 4-Bromofluorobenzene* | *0.152* | | *ug/L* | *0.14* | | *106* | *70-130* | | | |
| **LCS Dup (B6E1631-BSD1)** | | | | Prepared & Analyzed: 05/12/16 | | | | | | |
| Acetone | **0.0243** | 0.010 | ug/L | 0.024 | | 102 | 70-130 | 3.84 | 30 | |
| Benzene | **0.0285** | 0.010 | ug/L | 0.032 | | 89.1 | 70-130 | 3.54 | 30 | |
| Benzyl chloride | **0.0640** | 0.010 | ug/L | 0.052 | | 124 | 70-130 | 3.50 | 30 | |
| Bromodichloromethane | **0.0779** | 0.010 | ug/L | 0.067 | | 116 | 70-130 | 1.03 | 30 | |
| Bromoform | **0.123** | 0.010 | ug/L | 0.10 | | 119 | 70-130 | 1.58 | 30 | |
| Bromomethane | **0.0305** | 0.010 | ug/L | 0.039 | | 78.6 | 70-130 | 1.14 | 30 | |
| 2-Butanone (MEK) | **0.0291** | 0.010 | ug/L | 0.029 | | 98.6 | 70-130 | 0.506 | 30 | |
| Carbon Disulfide | **0.0303** | 0.010 | ug/L | 0.031 | | 97.3 | 70-130 | 2.60 | 30 | |
| Carbon Tetrachloride | **0.0783** | 0.010 | ug/L | 0.063 | | 124 | 70-130 | 1.46 | 30 | |
| Chlorobenzene | **0.0493** | 0.010 | ug/L | 0.046 | | 107 | 70-130 | 2.46 | 30 | |

**Viorel Vasile**
Operations Manager

# LABORATORY ANALYSIS RESULTS

**Client:** Stantec (TO)
**Project No:** 2057123300
**Project Name:** Grayson Power Plant Glendale Phase II

**AA Project No:** A732178
**Date Received:** 05/03/16
**Date Reported:** 05/18/16

| Analyte | Result | Reporting Limit | Units | Spike Level | Source Result | %REC | %REC Limits | RPD | RPD Limit | Notes |
|---|---|---|---|---|---|---|---|---|---|---|
| **VOCs by GCMS EPA TO-15 - Quality Control** | | | | | | | | | | |
| *Batch B6E1631 - *** DEFAULT PREP **** | | | | | | | | | | |
| **LCS Dup (B6E1631-BSD1) Continued** | | | | Prepared & Analyzed: 05/12/16 | | | | | | |
| Chloroethane | **0.0187** | 0.010 | ug/L | 0.026 | | 71.0 | 70-130 | 4.54 | 30 | |
| Chloroform | **0.0537** | 0.010 | ug/L | 0.049 | | 110 | 70-130 | 0.273 | 30 | |
| Chloromethane | **0.0205** | 0.010 | ug/L | 0.021 | | 99.5 | 70-130 | 1.99 | 30 | |
| Dibromochloromethane | **0.100** | 0.010 | ug/L | 0.085 | | 118 | 70-130 | 0.511 | 30 | |
| 1,2-Dibromoethane (EDB) | **0.0837** | 0.010 | ug/L | 0.077 | | 109 | 70-130 | 1.11 | 30 | |
| 1,2-Dichlorobenzene | **0.0714** | 0.010 | ug/L | 0.060 | | 119 | 70-130 | 1.10 | 30 | |
| 1,3-Dichlorobenzene | **0.0745** | 0.010 | ug/L | 0.060 | | 124 | 70-130 | 0.0807 | 30 | |
| 1,4-Dichlorobenzene | **0.0722** | 0.010 | ug/L | 0.060 | | 120 | 70-130 | 1.51 | 30 | |
| Dichlorodifluoromethane (R12) | **0.0590** | 0.010 | ug/L | 0.049 | | 119 | 70-130 | 2.64 | 30 | |
| 1,1-Dichloroethane | **0.0418** | 0.010 | ug/L | 0.040 | | 103 | 70-130 | 1.44 | 30 | |
| 1,2-Dichloroethane (EDC) | **0.0471** | 0.010 | ug/L | 0.040 | | 116 | 70-130 | 3.46 | 30 | |
| cis-1,2-Dichloroethylene | **0.0409** | 0.010 | ug/L | 0.040 | | 103 | 70-130 | 1.83 | 30 | |
| 1,1-Dichloroethylene | **0.0447** | 0.010 | ug/L | 0.040 | | 113 | 70-130 | 1.70 | 30 | |
| trans-1,2-Dichloroethylene | **0.0410** | 0.010 | ug/L | 0.040 | | 104 | 70-130 | 0.866 | 30 | |
| 1,2-Dichloropropane | **0.0473** | 0.010 | ug/L | 0.046 | | 102 | 70-130 | 2.78 | 30 | |
| trans-1,3-Dichloropropylene | **0.0498** | 0.010 | ug/L | 0.045 | | 110 | 70-130 | 1.84 | 30 | |
| cis-1,3-Dichloropropylene | **0.0481** | 0.010 | ug/L | 0.045 | | 106 | 70-130 | 0.758 | 30 | |
| Dichlorotetrafluoroethane | **0.0834** | 0.010 | ug/L | 0.070 | | 119 | 70-130 | 5.78 | 30 | |
| Ethylbenzene | **0.0492** | 0.010 | ug/L | 0.043 | | 113 | 70-130 | 1.24 | 30 | |
| 4-Ethyltoluene | **0.0601** | 0.010 | ug/L | 0.049 | | 122 | 70-130 | 2.32 | 30 | |
| Hexachlorobutadiene | **0.123** | 0.010 | ug/L | 0.11 | | 115 | 70-130 | 5.40 | 30 | |
| 2-Hexanone (MBK) | **0.0464** | 0.010 | ug/L | 0.041 | | 113 | 70-130 | 2.01 | 30 | |
| Isopropanol (IPA) | **0.0256** | 0.010 | ug/L | 0.025 | | 104 | 70-130 | 5.14 | 30 | |
| Methylene Chloride | **0.0363** | 0.010 | ug/L | 0.035 | | 104 | 70-130 | 3.02 | 30 | |
| 4-Methyl-2-pentanone (MIBK) | **0.0443** | 0.010 | ug/L | 0.041 | | 108 | 70-130 | 2.38 | 30 | |
| Styrene | **0.0454** | 0.010 | ug/L | 0.043 | | 107 | 70-130 | 3.34 | 30 | |
| 1,1,2,2-Tetrachloroethane | **0.0721** | 0.010 | ug/L | 0.069 | | 105 | 70-130 | 0.285 | 30 | |
| Tetrachloroethylene (PCE) | **0.0832** | 0.010 | ug/L | 0.068 | | 123 | 70-130 | 3.74 | 30 | |
| Toluene | **0.0416** | 0.010 | ug/L | 0.038 | | 110 | 70-130 | 4.45 | 30 | |
| 1,2,4-Trichlorobenzene | **0.0873** | 0.010 | ug/L | 0.074 | | 118 | 70-130 | 5.86 | 30 | |
| 1,1,2-Trichloroethane | **0.0578** | 0.010 | ug/L | 0.055 | | 106 | 70-130 | 0.846 | 30 | |

**Viorel Vasile**
Operations Manager

# LABORATORY ANALYSIS RESULTS

**Client:** Stantec (TO)
**Project No:** 2057123300
**Project Name:** Grayson Power Plant Glendale Phase II

**AA Project No:** A732178
**Date Received:** 05/03/16
**Date Reported:** 05/18/16

| Analyte | Result | Reporting Limit | Units | Spike Level | Source Result | %REC | %REC Limits | RPD | RPD Limit | Notes |
|---|---|---|---|---|---|---|---|---|---|---|
| **VOCs by GCMS EPA TO-15 - Quality Control** | | | | | | | | | | |
| *Batch B6E1631 - *** DEFAULT PREP **** | | | | | | | | | | |
| **LCS Dup (B6E1631-BSD1) Continued** | | | | Prepared & Analyzed: 05/12/16 | | | | | | |
| 1,1,1-Trichloroethane | **0.0621** | 0.010 | ug/L | 0.055 | | 114 | 70-130 | 1.91 | 30 | |
| Trichloroethylene (TCE) | **0.0599** | 0.010 | ug/L | 0.054 | | 112 | 70-130 | 6.77 | 30 | |
| Trichlorofluoromethane (R11) | **0.0661** | 0.010 | ug/L | 0.056 | | 118 | 70-130 | 1.77 | 30 | |
| 1,1,2-Trichloro-1,2,2-trifluoroethane (R113) | **0.0806** | 0.010 | ug/L | 0.077 | | 105 | 70-130 | 1.24 | 30 | |
| 1,3,5-Trimethylbenzene | **0.0573** | 0.010 | ug/L | 0.049 | | 117 | 70-130 | 0.775 | 30 | |
| 1,2,4-Trimethylbenzene | **0.0592** | 0.010 | ug/L | 0.049 | | 120 | 70-130 | 3.72 | 30 | |
| Vinyl acetate | **0.0366** | 0.010 | ug/L | 0.035 | | 104 | 70-130 | 1.15 | 30 | |
| Vinyl chloride | **0.0267** | 0.010 | ug/L | 0.026 | | 105 | 70-130 | 4.39 | 30 | |
| o-Xylene | **0.0496** | 0.010 | ug/L | 0.043 | | 114 | 70-130 | 2.21 | 30 | |
| m,p-Xylenes | **0.103** | 0.010 | ug/L | 0.087 | | 119 | 70-130 | 3.17 | 30 | |
| 1,2,3-Trichloropropane | **0.0636** | 0.010 | ug/L | 0.060 | | 106 | 70-130 | 5.25 | 30 | |
| sec-Butylbenzene | **0.0595** | 0.010 | ug/L | 0.055 | | 108 | 70-130 | 2.43 | 30 | |
| Isopropylbenzene | **0.0508** | 0.010 | ug/L | 0.049 | | 103 | 70-130 | 1.27 | 30 | |
| n-Propylbenzene | **0.0534** | 0.010 | ug/L | 0.049 | | 109 | 70-130 | 1.95 | 30 | |
| 4-Isopropyltoluene | **0.0607** | 0.010 | ug/L | 0.055 | | 110 | 70-130 | 2.29 | 30 | |
| *Surrogate: 4-Bromofluorobenzene* | *0.150* | | *ug/L* | *0.14* | | *104* | *70-130* | | | |
| **Duplicate (B6E1631-DUP1)** | | | | **Source: 6E03026-01** | Prepared & Analyzed: 05/12/16 | | | | | |
| Acetone | **<0.020** | 0.020 | ug/L | | <0.020 | | | | 30 | |
| Allyl chloride | **<0.020** | 0.020 | ug/L | | <0.020 | | | | 30 | |
| tert-Amyl Methyl Ether (TAME) | **<0.020** | 0.020 | ug/L | | <0.020 | | | | 30 | |
| Benzene | **<0.020** | 0.020 | ug/L | | <0.020 | | | | 30 | |
| Benzyl chloride | **<0.020** | 0.020 | ug/L | | <0.020 | | | | 30 | |
| Bromodichloromethane | **<0.020** | 0.020 | ug/L | | <0.020 | | | | 30 | |
| Bromoform | **<0.020** | 0.020 | ug/L | | <0.020 | | | | 30 | |
| Bromomethane | **<0.020** | 0.020 | ug/L | | <0.020 | | | | 30 | |
| 1,3-Butadiene | **<0.020** | 0.020 | ug/L | | <0.020 | | | | 30 | |
| 2-Butanone (MEK) | **<0.020** | 0.020 | ug/L | | <0.020 | | | | 30 | |
| tert-Butyl alcohol (TBA) | **<0.020** | 0.020 | ug/L | | <0.020 | | | | 30 | |
| Carbon Disulfide | **<0.020** | 0.020 | ug/L | | <0.020 | | | | 30 | |
| Carbon Tetrachloride | **<0.020** | 0.020 | ug/L | | <0.020 | | | | 30 | |

**Viorel Vasile**
Operations Manager

# LABORATORY ANALYSIS RESULTS

**Client:** Stantec (TO)
**Project No:** 2057123300
**Project Name:** Grayson Power Plant Glendale Phase II

**AA Project No:** A732178
**Date Received:** 05/03/16
**Date Reported:** 05/18/16

| Analyte | Result | Reporting Limit | Units | Spike Level | Source Result | %REC | %REC Limits | RPD | RPD Limit | Notes |
|---|---|---|---|---|---|---|---|---|---|---|
| **VOCs by GCMS EPA TO-15 - Quality Control** | | | | | | | | | | |
| *Batch B6E1631 - *** DEFAULT PREP **** | | | | | | | | | | |
| **Duplicate (B6E1631-DUP1) Continued** | **Source: 6E03026-01** Prepared & Analyzed: 05/12/16 | | | | | | | | | |
| Chlorobenzene | **<0.020** | 0.020 | ug/L | | <0.020 | | | | 30 | |
| Chloroethane | **<0.020** | 0.020 | ug/L | | <0.020 | | | | 30 | |
| Chloroform | **<0.020** | 0.020 | ug/L | | <0.020 | | | | 30 | |
| Chloromethane | **<0.020** | 0.020 | ug/L | | <0.020 | | | | 30 | |
| Cyclohexane | **<0.020** | 0.020 | ug/L | | <0.020 | | | | 30 | |
| Dibromochloromethane | **<0.020** | 0.020 | ug/L | | <0.020 | | | | 30 | |
| 1,2-Dibromoethane (EDB) | **<0.020** | 0.020 | ug/L | | <0.020 | | | | 30 | |
| 1,2-Dichlorobenzene | **<0.020** | 0.020 | ug/L | | <0.020 | | | | 30 | |
| 1,3-Dichlorobenzene | **<0.020** | 0.020 | ug/L | | <0.020 | | | | 30 | |
| 1,4-Dichlorobenzene | **<0.020** | 0.020 | ug/L | | <0.020 | | | | 30 | |
| Dichlorodifluoromethane (R12) | **<0.020** | 0.020 | ug/L | | <0.020 | | | | 30 | |
| 1,1-Dichloroethane | **<0.020** | 0.020 | ug/L | | <0.020 | | | | 30 | |
| 1,2-Dichloroethane (EDC) | **<0.020** | 0.020 | ug/L | | <0.020 | | | | 30 | |
| cis-1,2-Dichloroethylene | **<0.020** | 0.020 | ug/L | | <0.020 | | | | 30 | |
| 1,1-Dichloroethylene | **<0.020** | 0.020 | ug/L | | <0.020 | | | | 30 | |
| trans-1,2-Dichloroethylene | **<0.020** | 0.020 | ug/L | | <0.020 | | | | 30 | |
| 1,2-Dichloropropane | **<0.020** | 0.020 | ug/L | | <0.020 | | | | 30 | |
| trans-1,3-Dichloropropylene | **<0.020** | 0.020 | ug/L | | <0.020 | | | | 30 | |
| cis-1,3-Dichloropropylene | **<0.020** | 0.020 | ug/L | | <0.020 | | | | 30 | |
| Dichlorotetrafluoroethane | **<0.020** | 0.020 | ug/L | | <0.020 | | | | 30 | |
| Diisopropyl ether (DIPE) | **<0.020** | 0.020 | ug/L | | <0.020 | | | | 30 | |
| 1,4-Dioxane | **<0.020** | 0.020 | ug/L | | <0.020 | | | | 30 | |
| Ethanol | **<0.020** | 0.020 | ug/L | | <0.020 | | | | 30 | |
| Ethyl Acetate | **<0.020** | 0.020 | ug/L | | <0.020 | | | | 30 | |
| Ethylbenzene | **<0.020** | 0.020 | ug/L | | <0.020 | | | | 30 | |
| Ethyl-tert-Butyl Ether (ETBE) | **<0.020** | 0.020 | ug/L | | <0.020 | | | | 30 | |
| 4-Ethyltoluene | **<0.020** | 0.020 | ug/L | | <0.020 | | | | 30 | |
| Heptane | **<0.020** | 0.020 | ug/L | | <0.020 | | | | 30 | |
| Hexachlorobutadiene | **<0.020** | 0.020 | ug/L | | <0.020 | | | | 30 | |
| n-Hexane | **<0.020** | 0.020 | ug/L | | <0.020 | | | | 30 | |
| 2-Hexanone (MBK) | **<0.020** | 0.020 | ug/L | | <0.020 | | | | 30 | |

**Viorel Vasile**
Operations Manager

# LABORATORY ANALYSIS RESULTS

**Client:** Stantec (TO)
**Project No:** 2057123300
**Project Name:** Grayson Power Plant Glendale Phase II

**AA Project No:** A732178
**Date Received:** 05/03/16
**Date Reported:** 05/18/16

| Analyte | Result | Reporting Limit | Units | Spike Level | Source Result | %REC | %REC Limits | RPD | RPD Limit | Notes |
|---|---|---|---|---|---|---|---|---|---|---|
| **VOCs by GCMS EPA TO-15 - Quality Control** | | | | | | | | | | |
| *Batch B6E1631 - *** DEFAULT PREP **** | | | | | | | | | | |
| **Duplicate (B6E1631-DUP1) Continued** | **Source: 6E03026-01** Prepared & Analyzed: 05/12/16 | | | | | | | | | |
| Isopropanol (IPA) | **0.0520** | 0.020 | ug/L | | 0.0542 | | | 4.26 | 30 | |
| Methyl-tert-Butyl Ether (MTBE) | **<0.020** | 0.020 | ug/L | | <0.020 | | | | 30 | |
| Methylene Chloride | **<0.020** | 0.020 | ug/L | | <0.020 | | | | 30 | |
| 4-Methyl-2-pentanone (MIBK) | **<0.020** | 0.020 | ug/L | | <0.020 | | | | 30 | |
| Naphthalene | **<0.020** | 0.020 | ug/L | | <0.020 | | | | 30 | |
| Propylene | **<0.020** | 0.020 | ug/L | | <0.020 | | | | 30 | |
| Styrene | **0.0273** | 0.020 | ug/L | | 0.0311 | | | 13.1 | 30 | |
| 1,1,2,2-Tetrachloroethane | **<0.020** | 0.020 | ug/L | | <0.020 | | | | 30 | |
| Tetrachloroethylene (PCE) | **0.908** | 0.020 | ug/L | | 0.930 | | | 2.42 | 30 | |
| Tetrahydrofuran (THF) | **<0.020** | 0.020 | ug/L | | <0.020 | | | | 30 | |
| Toluene | **<0.020** | 0.020 | ug/L | | <0.020 | | | | 30 | |
| 1,2,4-Trichlorobenzene | **<0.020** | 0.020 | ug/L | | <0.020 | | | | 30 | |
| 1,1,2-Trichloroethane | **<0.020** | 0.020 | ug/L | | <0.020 | | | | 30 | |
| 1,1,1-Trichloroethane | **<0.020** | 0.020 | ug/L | | <0.020 | | | | 30 | |
| Trichloroethylene (TCE) | **0.265** | 0.020 | ug/L | | 0.255 | | | 3.89 | 30 | |
| Trichlorofluoromethane (R11) | **<0.020** | 0.020 | ug/L | | <0.020 | | | | 30 | |
| 1,1,2-Trichloro-1,2,2-trifluoroethane (R113) | **<0.020** | 0.020 | ug/L | | <0.020 | | | | 30 | |
| 1,3,5-Trimethylbenzene | **<0.020** | 0.020 | ug/L | | <0.020 | | | | 30 | |
| 1,2,4-Trimethylbenzene | **<0.020** | 0.020 | ug/L | | <0.020 | | | | 30 | |
| 2,2,4-Trimethylpentane | **<0.020** | 0.020 | ug/L | | <0.020 | | | | 30 | |
| Vinyl acetate | **<0.020** | 0.020 | ug/L | | <0.020 | | | | 30 | |
| Vinyl bromide | **<0.020** | 0.020 | ug/L | | <0.020 | | | | 30 | |
| Vinyl chloride | **<0.020** | 0.020 | ug/L | | <0.020 | | | | 30 | |
| o-Xylene | **<0.020** | 0.020 | ug/L | | <0.020 | | | | 30 | |
| m,p-Xylenes | **<0.020** | 0.020 | ug/L | | <0.020 | | | | 30 | |
| 1,2,3-Trichloropropane | **<0.020** | 0.020 | ug/L | | <0.020 | | | | 30 | |
| sec-Butylbenzene | **<0.020** | 0.020 | ug/L | | <0.020 | | | | 30 | |
| Isopropylbenzene | **<0.020** | 0.020 | ug/L | | <0.020 | | | | 30 | |
| n-Propylbenzene | **<0.020** | 0.020 | ug/L | | <0.020 | | | | 30 | |
| 4-Isopropyltoluene | **<0.020** | 0.020 | ug/L | | <0.020 | | | | 30 | |
| n-Butylbenzene | **<0.020** | 0.020 | ug/L | | <0.020 | | | | 200 | |

**Viorel Vasile**
Operations Manager

# LABORATORY ANALYSIS RESULTS

**Client:** Stantec (TO)
**Project No:** 2057123300
**Project Name:** Grayson Power Plant Glendale Phase II

**AA Project No:** A732178
**Date Received:** 05/03/16
**Date Reported:** 05/18/16

| Analyte | Result | Reporting Limit | Units | Spike Level | Source Result | %REC | %REC Limits | RPD | RPD Limit | Notes |
|---|---|---|---|---|---|---|---|---|---|---|
| **VOCs by GCMS EPA TO-15 - Quality Control** | | | | | | | | | | |
| *Batch B6E1631 - *** DEFAULT PREP **** | | | | | | | | | | |
| **Duplicate (B6E1631-DUP1) Continued** | | | **Source: 6E03026-01** | Prepared & Analyzed: 05/12/16 | | | | | | |
| *Surrogate: 4-Bromofluorobenzene* | *0.145* | | *ug/L* | *0.14* | | *101* | *70-130* | | | |
| *Batch B6E1632 - *** DEFAULT PREP **** | | | | | | | | | | |
| **Blank (B6E1632-BLK1)** | | | | Prepared & Analyzed: 05/13/16 | | | | | | |
| Acetone | <0.010 | 0.010 | ug/L | | | | | | | |
| Allyl chloride | <0.010 | 0.010 | ug/L | | | | | | | |
| tert-Amyl Methyl Ether (TAME) | <0.010 | 0.010 | ug/L | | | | | | | |
| Benzene | <0.010 | 0.010 | ug/L | | | | | | | |
| Benzyl chloride | <0.010 | 0.010 | ug/L | | | | | | | |
| Bromodichloromethane | <0.010 | 0.010 | ug/L | | | | | | | |
| Bromoform | <0.010 | 0.010 | ug/L | | | | | | | |
| Bromomethane | <0.010 | 0.010 | ug/L | | | | | | | |
| 1,3-Butadiene | <0.010 | 0.010 | ug/L | | | | | | | |
| 2-Butanone (MEK) | <0.010 | 0.010 | ug/L | | | | | | | |
| tert-Butyl alcohol (TBA) | <0.010 | 0.010 | ug/L | | | | | | | |
| Carbon Disulfide | <0.010 | 0.010 | ug/L | | | | | | | |
| Carbon Tetrachloride | <0.010 | 0.010 | ug/L | | | | | | | |
| Chlorobenzene | <0.010 | 0.010 | ug/L | | | | | | | |
| Chloroethane | <0.010 | 0.010 | ug/L | | | | | | | |
| Chloroform | <0.010 | 0.010 | ug/L | | | | | | | |
| Chloromethane | <0.010 | 0.010 | ug/L | | | | | | | |
| Cyclohexane | <0.010 | 0.010 | ug/L | | | | | | | |
| Dibromochloromethane | <0.010 | 0.010 | ug/L | | | | | | | |
| 1,2-Dibromoethane (EDB) | <0.010 | 0.010 | ug/L | | | | | | | |
| 1,2-Dichlorobenzene | <0.010 | 0.010 | ug/L | | | | | | | |
| 1,3-Dichlorobenzene | <0.010 | 0.010 | ug/L | | | | | | | |
| 1,4-Dichlorobenzene | <0.010 | 0.010 | ug/L | | | | | | | |
| Dichlorodifluoromethane (R12) | <0.010 | 0.010 | ug/L | | | | | | | |
| 1,1-Dichloroethane | <0.010 | 0.010 | ug/L | | | | | | | |
| 1,2-Dichloroethane (EDC) | <0.010 | 0.010 | ug/L | | | | | | | |
| cis-1,2-Dichloroethylene | <0.010 | 0.010 | ug/L | | | | | | | |
| 1,1-Dichloroethylene | <0.010 | 0.010 | ug/L | | | | | | | |

**Viorel Vasile**
Operations Manager

# LABORATORY ANALYSIS RESULTS

**Client:** Stantec (TO)
**Project No:** 2057123300
**Project Name:** Grayson Power Plant Glendale Phase II

**AA Project No:** A732178
**Date Received:** 05/03/16
**Date Reported:** 05/18/16

| Analyte | Result | Reporting Limit | Units | Spike Level | Source Result | %REC | %REC Limits | RPD | RPD Limit | Notes |
|---|---|---|---|---|---|---|---|---|---|---|
| **VOCs by GCMS EPA TO-15 - Quality Control** | | | | | | | | | | |
| *Batch B6E1632 - *** DEFAULT PREP **** | | | | | | | | | | |
| **Blank (B6E1632-BLK1) Continued** | | | | Prepared & Analyzed: 05/13/16 | | | | | | |
| trans-1,2-Dichloroethylene | <0.010 | 0.010 | ug/L | | | | | | | |
| 1,2-Dichloropropane | <0.010 | 0.010 | ug/L | | | | | | | |
| trans-1,3-Dichloropropylene | <0.010 | 0.010 | ug/L | | | | | | | |
| cis-1,3-Dichloropropylene | <0.010 | 0.010 | ug/L | | | | | | | |
| Dichlorotetrafluoroethane | <0.010 | 0.010 | ug/L | | | | | | | |
| Diisopropyl ether (DIPE) | <0.010 | 0.010 | ug/L | | | | | | | |
| 1,4-Dioxane | <0.010 | 0.010 | ug/L | | | | | | | |
| Ethanol | <0.010 | 0.010 | ug/L | | | | | | | |
| Ethyl Acetate | <0.010 | 0.010 | ug/L | | | | | | | |
| Ethylbenzene | <0.010 | 0.010 | ug/L | | | | | | | |
| Ethyl-tert-Butyl Ether (ETBE) | <0.010 | 0.010 | ug/L | | | | | | | |
| 4-Ethyltoluene | <0.010 | 0.010 | ug/L | | | | | | | |
| Heptane | <0.010 | 0.010 | ug/L | | | | | | | |
| Hexachlorobutadiene | <0.010 | 0.010 | ug/L | | | | | | | |
| n-Hexane | <0.010 | 0.010 | ug/L | | | | | | | |
| 2-Hexanone (MBK) | <0.010 | 0.010 | ug/L | | | | | | | |
| Isopropanol (IPA) | <0.010 | 0.010 | ug/L | | | | | | | |
| Methyl-tert-Butyl Ether (MTBE) | <0.010 | 0.010 | ug/L | | | | | | | |
| Methylene Chloride | <0.010 | 0.010 | ug/L | | | | | | | |
| 4-Methyl-2-pentanone (MIBK) | <0.010 | 0.010 | ug/L | | | | | | | |
| Naphthalene | <0.010 | 0.010 | ug/L | | | | | | | |
| Propylene | <0.010 | 0.010 | ug/L | | | | | | | |
| Styrene | <0.010 | 0.010 | ug/L | | | | | | | |
| 1,1,2,2-Tetrachloroethane | <0.010 | 0.010 | ug/L | | | | | | | |
| Tetrachloroethylene (PCE) | <0.010 | 0.010 | ug/L | | | | | | | |
| Tetrahydrofuran (THF) | <0.010 | 0.010 | ug/L | | | | | | | |
| Toluene | <0.010 | 0.010 | ug/L | | | | | | | |
| 1,2,4-Trichlorobenzene | <0.010 | 0.010 | ug/L | | | | | | | |
| 1,1,2-Trichloroethane | <0.010 | 0.010 | ug/L | | | | | | | |
| 1,1,1-Trichloroethane | <0.010 | 0.010 | ug/L | | | | | | | |
| Trichloroethylene (TCE) | <0.010 | 0.010 | ug/L | | | | | | | |

**Viorel Vasile**
Operations Manager

# LABORATORY ANALYSIS RESULTS

**Client:** Stantec (TO)
**Project No:** 2057123300
**Project Name:** Grayson Power Plant Glendale Phase II

**AA Project No:** A732178
**Date Received:** 05/03/16
**Date Reported:** 05/18/16

| Analyte | Result | Reporting Limit | Units | Spike Level | Source Result | %REC | %REC Limits | RPD | RPD Limit | Notes |
|---|---|---|---|---|---|---|---|---|---|---|
| **VOCs by GCMS EPA TO-15 - Quality Control** | | | | | | | | | | |
| *Batch B6E1632 - *** DEFAULT PREP **** | | | | | | | | | | |
| **Blank (B6E1632-BLK1) Continued** | | | | Prepared & Analyzed: 05/13/16 | | | | | | |
| Trichlorofluoromethane (R11) | <0.010 | 0.010 | ug/L | | | | | | | |
| 1,1,2-Trichloro-1,2,2-trifluoroethane (R113) | <0.010 | 0.010 | ug/L | | | | | | | |
| 1,3,5-Trimethylbenzene | <0.010 | 0.010 | ug/L | | | | | | | |
| 1,2,4-Trimethylbenzene | <0.010 | 0.010 | ug/L | | | | | | | |
| 2,2,4-Trimethylpentane | <0.010 | 0.010 | ug/L | | | | | | | |
| Vinyl acetate | <0.010 | 0.010 | ug/L | | | | | | | |
| Vinyl bromide | <0.010 | 0.010 | ug/L | | | | | | | |
| Vinyl chloride | <0.010 | 0.010 | ug/L | | | | | | | |
| o-Xylene | <0.010 | 0.010 | ug/L | | | | | | | |
| m,p-Xylenes | <0.010 | 0.010 | ug/L | | | | | | | |
| 1,2,3-Trichloropropane | <0.010 | 0.010 | ug/L | | | | | | | |
| sec-Butylbenzene | <0.010 | 0.010 | ug/L | | | | | | | |
| Isopropylbenzene | <0.010 | 0.010 | ug/L | | | | | | | |
| n-Propylbenzene | <0.010 | 0.010 | ug/L | | | | | | | |
| 4-Isopropyltoluene | <0.010 | 0.010 | ug/L | | | | | | | |
| n-Butylbenzene | <0.010 | 0.010 | ug/L | | | | | | | |
| *Surrogate: 4-Bromofluorobenzene* | *0.155* | | *ug/L* | *0.14* | | *108* | *70-130* | | | |
| **LCS (B6E1632-BS1)** | | | | Prepared & Analyzed: 05/13/16 | | | | | | |
| Acetone | **0.0243** | 0.010 | ug/L | 0.024 | | 102 | 70-130 | | | |
| Benzene | **0.0271** | 0.010 | ug/L | 0.032 | | 84.7 | 70-130 | | | |
| Benzyl chloride | **0.0611** | 0.010 | ug/L | 0.052 | | 118 | 70-130 | | | |
| Bromodichloromethane | **0.0744** | 0.010 | ug/L | 0.067 | | 111 | 70-130 | | | |
| Bromoform | **0.117** | 0.010 | ug/L | 0.10 | | 113 | 70-130 | | | |
| Bromomethane | **0.0303** | 0.010 | ug/L | 0.039 | | 78.1 | 70-130 | | | |
| 2-Butanone (MEK) | **0.0286** | 0.010 | ug/L | 0.029 | | 97.1 | 70-130 | | | |
| Carbon Disulfide | **0.0291** | 0.010 | ug/L | 0.031 | | 93.6 | 70-130 | | | |
| Carbon Tetrachloride | **0.0743** | 0.010 | ug/L | 0.063 | | 118 | 70-130 | | | |
| Chlorobenzene | **0.0452** | 0.010 | ug/L | 0.046 | | 98.2 | 70-130 | | | |
| Chloroethane | **0.0179** | 0.010 | ug/L | 0.026 | | 67.8 | 70-130 | | | *** |
| Chloroform | **0.0517** | 0.010 | ug/L | 0.049 | | 106 | 70-130 | | | |

**Viorel Vasile**
Operations Manager

# LABORATORY ANALYSIS RESULTS

**Client:** Stantec (TO)
**Project No:** 2057123300
**Project Name:** Grayson Power Plant Glendale Phase II

**AA Project No:** A732178
**Date Received:** 05/03/16
**Date Reported:** 05/18/16

| Analyte | Result | Reporting Limit | Units | Spike Level | Source Result | %REC | %REC Limits | RPD | RPD Limit | Notes |
|---|---|---|---|---|---|---|---|---|---|---|
| **VOCs by GCMS EPA TO-15 - Quality Control** | | | | | | | | | | |
| *Batch B6E1632 - *** DEFAULT PREP **** | | | | | | | | | | |
| **LCS (B6E1632-BS1) Continued** | | | | Prepared & Analyzed: 05/13/16 | | | | | | |
| Chloromethane | **0.0200** | 0.010 | ug/L | 0.021 | | 96.9 | 70-130 | | | |
| Dibromochloromethane | **0.0938** | 0.010 | ug/L | 0.085 | | 110 | 70-130 | | | |
| 1,2-Dibromoethane (EDB) | **0.0783** | 0.010 | ug/L | 0.077 | | 102 | 70-130 | | | |
| 1,2-Dichlorobenzene | **0.0668** | 0.010 | ug/L | 0.060 | | 111 | 70-130 | | | |
| 1,3-Dichlorobenzene | **0.0617** | 0.010 | ug/L | 0.060 | | 103 | 70-130 | | | |
| 1,4-Dichlorobenzene | **0.0664** | 0.010 | ug/L | 0.060 | | 110 | 70-130 | | | |
| Dichlorodifluoromethane (R12) | **0.0589** | 0.010 | ug/L | 0.049 | | 119 | 70-130 | | | |
| 1,1-Dichloroethane | **0.0423** | 0.010 | ug/L | 0.040 | | 104 | 70-130 | | | |
| 1,2-Dichloroethane (EDC) | **0.0466** | 0.010 | ug/L | 0.040 | | 115 | 70-130 | | | |
| cis-1,2-Dichloroethylene | **0.0400** | 0.010 | ug/L | 0.040 | | 101 | 70-130 | | | |
| 1,1-Dichloroethylene | **0.0421** | 0.010 | ug/L | 0.040 | | 106 | 70-130 | | | |
| trans-1,2-Dichloroethylene | **0.0405** | 0.010 | ug/L | 0.040 | | 102 | 70-130 | | | |
| 1,2-Dichloropropane | **0.0452** | 0.010 | ug/L | 0.046 | | 97.8 | 70-130 | | | |
| trans-1,3-Dichloropropylene | **0.0472** | 0.010 | ug/L | 0.045 | | 104 | 70-130 | | | |
| cis-1,3-Dichloropropylene | **0.0457** | 0.010 | ug/L | 0.045 | | 101 | 70-130 | | | |
| Dichlorotetrafluoroethane | **0.0867** | 0.010 | ug/L | 0.070 | | 124 | 70-130 | | | |
| Ethylbenzene | **0.0448** | 0.010 | ug/L | 0.043 | | 103 | 70-130 | | | |
| 4-Ethyltoluene | **0.0554** | 0.010 | ug/L | 0.049 | | 113 | 70-130 | | | |
| Hexachlorobutadiene | **0.117** | 0.010 | ug/L | 0.11 | | 110 | 70-130 | | | |
| 2-Hexanone (MBK) | **0.0444** | 0.010 | ug/L | 0.041 | | 108 | 70-130 | | | |
| Isopropanol (IPA) | **0.0265** | 0.010 | ug/L | 0.025 | | 108 | 70-130 | | | |
| Methylene Chloride | **0.0359** | 0.010 | ug/L | 0.035 | | 103 | 70-130 | | | |
| 4-Methyl-2-pentanone (MIBK) | **0.0431** | 0.010 | ug/L | 0.041 | | 105 | 70-130 | | | |
| Styrene | **0.0417** | 0.010 | ug/L | 0.043 | | 98.0 | 70-130 | | | |
| 1,1,2,2-Tetrachloroethane | **0.0675** | 0.010 | ug/L | 0.069 | | 98.3 | 70-130 | | | |
| Tetrachloroethylene (PCE) | **0.0767** | 0.010 | ug/L | 0.068 | | 113 | 70-130 | | | |
| Toluene | **0.0379** | 0.010 | ug/L | 0.038 | | 101 | 70-130 | | | |
| 1,2,4-Trichlorobenzene | **0.0841** | 0.010 | ug/L | 0.074 | | 113 | 70-130 | | | |
| 1,1,2-Trichloroethane | **0.0555** | 0.010 | ug/L | 0.055 | | 102 | 70-130 | | | |
| 1,1,1-Trichloroethane | **0.0617** | 0.010 | ug/L | 0.055 | | 113 | 70-130 | | | |
| Trichloroethylene (TCE) | **0.0540** | 0.010 | ug/L | 0.054 | | 100 | 70-130 | | | |

**Viorel Vasile**
Operations Manager

# LABORATORY ANALYSIS RESULTS

**Client:** Stantec (TO)
**Project No:** 2057123300
**Project Name:** Grayson Power Plant Glendale Phase II

**AA Project No:** A732178
**Date Received:** 05/03/16
**Date Reported:** 05/18/16

| Analyte | Result | Reporting Limit | Units | Spike Level | Source Result | %REC | %REC Limits | RPD | RPD Limit | Notes |
|---|---|---|---|---|---|---|---|---|---|---|
| **VOCs by GCMS EPA TO-15 - Quality Control** | | | | | | | | | | |
| *Batch B6E1632 - *** DEFAULT PREP **** | | | | | | | | | | |
| **LCS (B6E1632-BS1) Continued** | | | | Prepared & Analyzed: 05/13/16 | | | | | | |
| Trichlorofluoromethane (R11) | **0.0656** | 0.010 | ug/L | 0.056 | | 117 | 70-130 | | | |
| 1,1,2-Trichloro-1,2,2-trifluoroethane (R113) | **0.0781** | 0.010 | ug/L | 0.077 | | 102 | 70-130 | | | |
| 1,3,5-Trimethylbenzene | **0.0536** | 0.010 | ug/L | 0.049 | | 109 | 70-130 | | | |
| 1,2,4-Trimethylbenzene | **0.0543** | 0.010 | ug/L | 0.049 | | 110 | 70-130 | | | |
| Vinyl acetate | **0.0363** | 0.010 | ug/L | 0.035 | | 103 | 70-130 | | | |
| Vinyl chloride | **0.0276** | 0.010 | ug/L | 0.026 | | 108 | 70-130 | | | |
| o-Xylene | **0.0466** | 0.010 | ug/L | 0.043 | | 107 | 70-130 | | | |
| m,p-Xylenes | **0.0963** | 0.010 | ug/L | 0.087 | | 111 | 70-130 | | | |
| 1,2,3-Trichloropropane | **0.0577** | 0.010 | ug/L | 0.060 | | 95.7 | 70-130 | | | |
| sec-Butylbenzene | **0.0546** | 0.010 | ug/L | 0.055 | | 99.4 | 70-130 | | | |
| Isopropylbenzene | **0.0470** | 0.010 | ug/L | 0.049 | | 95.7 | 70-130 | | | |
| n-Propylbenzene | **0.0493** | 0.010 | ug/L | 0.049 | | 100 | 70-130 | | | |
| 4-Isopropyltoluene | **0.0551** | 0.010 | ug/L | 0.055 | | 100 | 70-130 | | | |
| *Surrogate: 4-Bromofluorobenzene* | *0.152* | | *ug/L* | *0.14* | | *106* | *70-130* | | | |
| **LCS Dup (B6E1632-BSD1)** | | | | Prepared: 05/13/16 Analyzed: 05/14/16 | | | | | | |
| Acetone | **0.0219** | 0.010 | ug/L | 0.024 | | 92.0 | 70-130 | 10.6 | 30 | |
| Benzene | **0.0253** | 0.010 | ug/L | 0.032 | | 79.3 | 70-130 | 6.59 | 30 | |
| Benzyl chloride | **0.0561** | 0.010 | ug/L | 0.052 | | 108 | 70-130 | 8.48 | 30 | |
| Bromodichloromethane | **0.0687** | 0.010 | ug/L | 0.067 | | 102 | 70-130 | 8.05 | 30 | |
| Bromoform | **0.111** | 0.010 | ug/L | 0.10 | | 107 | 70-130 | 5.62 | 30 | |
| Bromomethane | **0.0274** | 0.010 | ug/L | 0.039 | | 70.6 | 70-130 | 10.1 | 30 | |
| 2-Butanone (MEK) | **0.0262** | 0.010 | ug/L | 0.029 | | 88.7 | 70-130 | 9.04 | 30 | |
| Carbon Disulfide | **0.0266** | 0.010 | ug/L | 0.031 | | 85.4 | 70-130 | 9.16 | 30 | |
| Carbon Tetrachloride | **0.0695** | 0.010 | ug/L | 0.063 | | 110 | 70-130 | 6.74 | 30 | |
| Chlorobenzene | **0.0449** | 0.010 | ug/L | 0.046 | | 97.6 | 70-130 | 0.613 | 30 | |
| Chloroethane | **0.0164** | 0.010 | ug/L | 0.026 | | 62.1 | 70-130 | 8.78 | 30 | *** |
| Chloroform | **0.0478** | 0.010 | ug/L | 0.049 | | 97.8 | 70-130 | 7.95 | 30 | |
| Chloromethane | **0.0200** | 0.010 | ug/L | 0.021 | | 96.7 | 70-130 | 0.207 | 30 | |
| Dibromochloromethane | **0.0919** | 0.010 | ug/L | 0.085 | | 108 | 70-130 | 2.02 | 30 | |
| 1,2-Dibromoethane (EDB) | **0.0772** | 0.010 | ug/L | 0.077 | | 100 | 70-130 | 1.38 | 30 | |

**Viorel Vasile**
Operations Manager

# LABORATORY ANALYSIS RESULTS

**Client:** Stantec (TO)
**Project No:** 2057123300
**Project Name:** Grayson Power Plant Glendale Phase II

**AA Project No:** A732178
**Date Received:** 05/03/16
**Date Reported:** 05/18/16

| Analyte | Result | Reporting Limit | Units | Spike Level | Source Result | %REC | %REC Limits | RPD | RPD Limit | Notes |
|---|---|---|---|---|---|---|---|---|---|---|
| **VOCs by GCMS EPA TO-15 - Quality Control** | | | | | | | | | | |
| *Batch B6E1632 - *** DEFAULT PREP **** | | | | | | | | | | |
| **LCS Dup (B6E1632-BSD1) Continued** | | | | Prepared: 05/13/16 Analyzed: 05/14/16 | | | | | | |
| 1,2-Dichlorobenzene | **0.0655** | 0.010 | ug/L | 0.060 | | 109 | 70-130 | 2.00 | 30 | |
| 1,3-Dichlorobenzene | **0.0662** | 0.010 | ug/L | 0.060 | | 110 | 70-130 | 7.05 | 30 | |
| 1,4-Dichlorobenzene | **0.0651** | 0.010 | ug/L | 0.060 | | 108 | 70-130 | 2.10 | 30 | |
| Dichlorodifluoromethane (R12) | **0.0530** | 0.010 | ug/L | 0.049 | | 107 | 70-130 | 10.6 | 30 | |
| 1,1-Dichloroethane | **0.0385** | 0.010 | ug/L | 0.040 | | 95.1 | 70-130 | 9.32 | 30 | |
| 1,2-Dichloroethane (EDC) | **0.0425** | 0.010 | ug/L | 0.040 | | 105 | 70-130 | 9.27 | 30 | |
| cis-1,2-Dichloroethylene | **0.0379** | 0.010 | ug/L | 0.040 | | 95.5 | 70-130 | 5.50 | 30 | |
| 1,1-Dichloroethylene | **0.0387** | 0.010 | ug/L | 0.040 | | 97.5 | 70-130 | 8.45 | 30 | |
| trans-1,2-Dichloroethylene | **0.0373** | 0.010 | ug/L | 0.040 | | 94.2 | 70-130 | 8.05 | 30 | |
| 1,2-Dichloropropane | **0.0428** | 0.010 | ug/L | 0.046 | | 92.7 | 70-130 | 5.35 | 30 | |
| trans-1,3-Dichloropropylene | **0.0450** | 0.010 | ug/L | 0.045 | | 99.2 | 70-130 | 4.72 | 30 | |
| cis-1,3-Dichloropropylene | **0.0427** | 0.010 | ug/L | 0.045 | | 94.0 | 70-130 | 6.98 | 30 | |
| Dichlorotetrafluoroethane | **0.0786** | 0.010 | ug/L | 0.070 | | 112 | 70-130 | 9.81 | 30 | |
| Ethylbenzene | **0.0440** | 0.010 | ug/L | 0.043 | | 101 | 70-130 | 1.86 | 30 | |
| 4-Ethyltoluene | **0.0545** | 0.010 | ug/L | 0.049 | | 111 | 70-130 | 1.61 | 30 | |
| Hexachlorobutadiene | **0.108** | 0.010 | ug/L | 0.11 | | 102 | 70-130 | 7.93 | 30 | |
| 2-Hexanone (MBK) | **0.0355** | 0.010 | ug/L | 0.041 | | 86.6 | 70-130 | 22.3 | 30 | |
| Isopropanol (IPA) | **0.0227** | 0.010 | ug/L | 0.025 | | 92.4 | 70-130 | 15.6 | 30 | |
| Methylene Chloride | **0.0330** | 0.010 | ug/L | 0.035 | | 94.9 | 70-130 | 8.57 | 30 | |
| 4-Methyl-2-pentanone (MIBK) | **0.0366** | 0.010 | ug/L | 0.041 | | 89.3 | 70-130 | 16.3 | 30 | |
| Styrene | **0.0410** | 0.010 | ug/L | 0.043 | | 96.3 | 70-130 | 1.75 | 30 | |
| 1,1,2,2-Tetrachloroethane | **0.0662** | 0.010 | ug/L | 0.069 | | 96.4 | 70-130 | 1.95 | 30 | |
| Tetrachloroethylene (PCE) | **0.0748** | 0.010 | ug/L | 0.068 | | 110 | 70-130 | 2.42 | 30 | |
| Toluene | **0.0369** | 0.010 | ug/L | 0.038 | | 98.0 | 70-130 | 2.62 | 30 | |
| 1,2,4-Trichlorobenzene | **0.0724** | 0.010 | ug/L | 0.074 | | 97.6 | 70-130 | 14.9 | 30 | |
| 1,1,2-Trichloroethane | **0.0537** | 0.010 | ug/L | 0.055 | | 98.5 | 70-130 | 3.30 | 30 | |
| 1,1,1-Trichloroethane | **0.0553** | 0.010 | ug/L | 0.055 | | 101 | 70-130 | 10.9 | 30 | |
| Trichloroethylene (TCE) | **0.0542** | 0.010 | ug/L | 0.054 | | 101 | 70-130 | 0.497 | 30 | |
| Trichlorofluoromethane (R11) | **0.0602** | 0.010 | ug/L | 0.056 | | 107 | 70-130 | 8.58 | 30 | |
| 1,1,2-Trichloro-1,2,2-trifluoroethane (R113) | **0.0724** | 0.010 | ug/L | 0.077 | | 94.5 | 70-130 | 7.54 | 30 | |
| 1,3,5-Trimethylbenzene | **0.0531** | 0.010 | ug/L | 0.049 | | 108 | 70-130 | 0.921 | 30 | |

**Viorel Vasile**
Operations Manager

# LABORATORY ANALYSIS RESULTS

**Client:** Stantec (TO)
**Project No:** 2057123300
**Project Name:** Grayson Power Plant Glendale Phase II

**AA Project No:** A732178
**Date Received:** 05/03/16
**Date Reported:** 05/18/16

| Analyte | Result | Reporting Limit | Units | Spike Level | Source Result | %REC | %REC Limits | RPD | RPD Limit | Notes |
|---|---|---|---|---|---|---|---|---|---|---|
| **VOCs by GCMS EPA TO-15 - Quality Control** | | | | | | | | | | |
| *Batch B6E1632 - *** DEFAULT PREP **** | | | | | | | | | | |
| **LCS Dup (B6E1632-BSD1) Continued** | | | | Prepared: 05/13/16 Analyzed: 05/14/16 | | | | | | |
| 1,2,4-Trimethylbenzene | **0.0536** | 0.010 | ug/L | 0.049 | | 109 | 70-130 | 1.28 | 30 | |
| Vinyl acetate | **0.0328** | 0.010 | ug/L | 0.035 | | 93.2 | 70-130 | 10.1 | 30 | |
| Vinyl chloride | **0.0256** | 0.010 | ug/L | 0.026 | | 100 | 70-130 | 7.49 | 30 | |
| o-Xylene | **0.0458** | 0.010 | ug/L | 0.043 | | 106 | 70-130 | 1.78 | 30 | |
| m,p-Xylenes | **0.0928** | 0.010 | ug/L | 0.087 | | 107 | 70-130 | 3.77 | 30 | |
| 1,2,3-Trichloropropane | **0.0569** | 0.010 | ug/L | 0.060 | | 94.3 | 70-130 | 1.47 | 30 | |
| sec-Butylbenzene | **0.0546** | 0.010 | ug/L | 0.055 | | 99.5 | 70-130 | 0.101 | 30 | |
| Isopropylbenzene | **0.0462** | 0.010 | ug/L | 0.049 | | 93.9 | 70-130 | 1.90 | 30 | |
| n-Propylbenzene | **0.0497** | 0.010 | ug/L | 0.049 | | 101 | 70-130 | 0.794 | 30 | |
| 4-Isopropyltoluene | **0.0558** | 0.010 | ug/L | 0.055 | | 102 | 70-130 | 1.29 | 30 | |
| *Surrogate: 4-Bromofluorobenzene* | *0.153* | | *ug/L* | *0.14* | | *107* | *70-130* | | | |
| **Duplicate (B6E1632-DUP1)** | | | **Source: 6E03026-09** | Prepared & Analyzed: 05/13/16 | | | | | | |
| Acetone | **<0.60** | 0.60 | ug/L | | <0.60 | | | | 30 | |
| Allyl chloride | **<0.60** | 0.60 | ug/L | | <0.60 | | | | 30 | |
| tert-Amyl Methyl Ether (TAME) | **<0.60** | 0.60 | ug/L | | <0.60 | | | | 30 | |
| Benzene | **<0.60** | 0.60 | ug/L | | <0.60 | | | | 30 | |
| Benzyl chloride | **<0.60** | 0.60 | ug/L | | <0.60 | | | | 30 | |
| Bromodichloromethane | **<0.60** | 0.60 | ug/L | | <0.60 | | | | 30 | |
| Bromoform | **<0.60** | 0.60 | ug/L | | <0.60 | | | | 30 | |
| Bromomethane | **<0.60** | 0.60 | ug/L | | <0.60 | | | | 30 | |
| 1,3-Butadiene | **<0.60** | 0.60 | ug/L | | <0.60 | | | | 30 | |
| 2-Butanone (MEK) | **<0.60** | 0.60 | ug/L | | <0.60 | | | | 30 | |
| tert-Butyl alcohol (TBA) | **<0.60** | 0.60 | ug/L | | <0.60 | | | | 30 | |
| Carbon Disulfide | **<0.60** | 0.60 | ug/L | | <0.60 | | | | 30 | |
| Carbon Tetrachloride | **<0.60** | 0.60 | ug/L | | <0.60 | | | | 30 | |
| Chlorobenzene | **<0.60** | 0.60 | ug/L | | <0.60 | | | | 30 | |
| Chloroethane | **<0.60** | 0.60 | ug/L | | <0.60 | | | | 30 | |
| Chloroform | **<0.60** | 0.60 | ug/L | | <0.60 | | | | 30 | |
| Chloromethane | **<0.60** | 0.60 | ug/L | | <0.60 | | | | 30 | |
| Cyclohexane | **<0.60** | 0.60 | ug/L | | <0.60 | | | | 30 | |
| Dibromochloromethane | **<0.60** | 0.60 | ug/L | | <0.60 | | | | 30 | |

**Viorel Vasile**
Operations Manager

# LABORATORY ANALYSIS RESULTS

**Client:** Stantec (TO)
**Project No:** 2057123300
**Project Name:** Grayson Power Plant Glendale Phase II

**AA Project No:** A732178
**Date Received:** 05/03/16
**Date Reported:** 05/18/16

| Analyte | Result | Reporting Limit | Units | Spike Level | Source Result | %REC | %REC Limits | RPD | RPD Limit | Notes |
|---|---|---|---|---|---|---|---|---|---|---|
| **VOCs by GCMS EPA TO-15 - Quality Control** | | | | | | | | | | |
| *Batch B6E1632 - *** DEFAULT PREP **** | | | | | | | | | | |
| **Duplicate (B6E1632-DUP1) Continued** | **Source: 6E03026-09** Prepared & Analyzed: 05/13/16 | | | | | | | | | |
| 1,2-Dibromoethane (EDB) | **<0.60** | 0.60 | ug/L | | <0.60 | | | | 30 | |
| 1,2-Dichlorobenzene | **<0.60** | 0.60 | ug/L | | <0.60 | | | | 30 | |
| 1,3-Dichlorobenzene | **<0.60** | 0.60 | ug/L | | <0.60 | | | | 30 | |
| 1,4-Dichlorobenzene | **<0.60** | 0.60 | ug/L | | <0.60 | | | | 30 | |
| Dichlorodifluoromethane (R12) | **<0.60** | 0.60 | ug/L | | <0.60 | | | | 30 | |
| 1,1-Dichloroethane | **<0.60** | 0.60 | ug/L | | <0.60 | | | | 30 | |
| 1,2-Dichloroethane (EDC) | **<0.60** | 0.60 | ug/L | | <0.60 | | | | 30 | |
| cis-1,2-Dichloroethylene | **<0.60** | 0.60 | ug/L | | <0.60 | | | | 30 | |
| 1,1-Dichloroethylene | **2.47** | 0.60 | ug/L | | 2.37 | | | 4.23 | 30 | |
| trans-1,2-Dichloroethylene | **<0.60** | 0.60 | ug/L | | <0.60 | | | | 30 | |
| 1,2-Dichloropropane | **<0.60** | 0.60 | ug/L | | <0.60 | | | | 30 | |
| trans-1,3-Dichloropropylene | **<0.60** | 0.60 | ug/L | | <0.60 | | | | 30 | |
| cis-1,3-Dichloropropylene | **<0.60** | 0.60 | ug/L | | <0.60 | | | | 30 | |
| Dichlorotetrafluoroethane | **<0.60** | 0.60 | ug/L | | <0.60 | | | | 30 | |
| Diisopropyl ether (DIPE) | **<0.60** | 0.60 | ug/L | | <0.60 | | | | 30 | |
| 1,4-Dioxane | **<0.60** | 0.60 | ug/L | | <0.60 | | | | 30 | |
| Ethanol | **<0.60** | 0.60 | ug/L | | <0.60 | | | | 30 | |
| Ethyl Acetate | **<0.60** | 0.60 | ug/L | | <0.60 | | | | 30 | |
| Ethylbenzene | **<0.60** | 0.60 | ug/L | | <0.60 | | | | 30 | |
| Ethyl-tert-Butyl Ether (ETBE) | **<0.60** | 0.60 | ug/L | | <0.60 | | | | 30 | |
| 4-Ethyltoluene | **<0.60** | 0.60 | ug/L | | <0.60 | | | | 30 | |
| Heptane | **<0.60** | 0.60 | ug/L | | <0.60 | | | | 30 | |
| Hexachlorobutadiene | **<0.60** | 0.60 | ug/L | | <0.60 | | | | 30 | |
| n-Hexane | **<0.60** | 0.60 | ug/L | | <0.60 | | | | 30 | |
| 2-Hexanone (MBK) | **<0.60** | 0.60 | ug/L | | <0.60 | | | | 30 | |
| Isopropanol (IPA) | **<0.60** | 0.60 | ug/L | | <0.60 | | | | 30 | |
| Methyl-tert-Butyl Ether (MTBE) | **<0.60** | 0.60 | ug/L | | <0.60 | | | | 30 | |
| Methylene Chloride | **<0.60** | 0.60 | ug/L | | <0.60 | | | | 30 | |
| 4-Methyl-2-pentanone (MIBK) | **<0.60** | 0.60 | ug/L | | <0.60 | | | | 30 | |
| Naphthalene | **<0.60** | 0.60 | ug/L | | <0.60 | | | | 30 | |
| Propylene | **<0.60** | 0.60 | ug/L | | <0.60 | | | | 30 | |

**Viorel Vasile**
Operations Manager

# LABORATORY ANALYSIS RESULTS

**Client:** Stantec (TO)
**Project No:** 2057123300
**Project Name:** Grayson Power Plant Glendale Phase II

**AA Project No:** A732178
**Date Received:** 05/03/16
**Date Reported:** 05/18/16

| Analyte | Result | Reporting Limit | Units | Spike Level | Source Result | %REC | %REC Limits | RPD | RPD Limit | Notes |
|---|---|---|---|---|---|---|---|---|---|---|
| **VOCs by GCMS EPA TO-15 - Quality Control** | | | | | | | | | | |
| *Batch B6E1632 - *** DEFAULT PREP **** | | | | | | | | | | |
| **Duplicate (B6E1632-DUP1) Continued** | | **Source: 6E03026-09** | Prepared & Analyzed: 05/13/16 | | | | | | | |
| Styrene | **<0.60** | 0.60 | ug/L | | <0.60 | | | | 30 | |
| 1,1,2,2-Tetrachloroethane | **<0.60** | 0.60 | ug/L | | <0.60 | | | | 30 | |
| Tetrachloroethylene (PCE) | **1.67** | 0.60 | ug/L | | 1.60 | | | 4.23 | 30 | |
| Tetrahydrofuran (THF) | **<0.60** | 0.60 | ug/L | | <0.60 | | | | 30 | |
| Toluene | **<0.60** | 0.60 | ug/L | | <0.60 | | | | 30 | |
| 1,2,4-Trichlorobenzene | **<0.60** | 0.60 | ug/L | | <0.60 | | | | 30 | |
| 1,1,2-Trichloroethane | **<0.60** | 0.60 | ug/L | | <0.60 | | | | 30 | |
| 1,1,1-Trichloroethane | **<0.60** | 0.60 | ug/L | | <0.60 | | | | 30 | |
| Trichloroethylene (TCE) | **9.32** | 0.60 | ug/L | | 9.12 | | | 2.17 | 30 | |
| Trichlorofluoromethane (R11) | **<0.60** | 0.60 | ug/L | | <0.60 | | | | 30 | |
| 1,1,2-Trichloro-1,2,2-trifluoroethane (R113) | **<0.60** | 0.60 | ug/L | | <0.60 | | | | 30 | |
| 1,3,5-Trimethylbenzene | **<0.60** | 0.60 | ug/L | | <0.60 | | | | 30 | |
| 1,2,4-Trimethylbenzene | **<0.60** | 0.60 | ug/L | | <0.60 | | | | 30 | |
| 2,2,4-Trimethylpentane | **<0.60** | 0.60 | ug/L | | <0.60 | | | | 30 | |
| Vinyl acetate | **<0.60** | 0.60 | ug/L | | <0.60 | | | | 30 | |
| Vinyl bromide | **<0.60** | 0.60 | ug/L | | <0.60 | | | | 30 | |
| Vinyl chloride | **<0.60** | 0.60 | ug/L | | <0.60 | | | | 30 | |
| o-Xylene | **<0.60** | 0.60 | ug/L | | <0.60 | | | | 30 | |
| m,p-Xylenes | **<0.60** | 0.60 | ug/L | | <0.60 | | | | 30 | |
| 1,2,3-Trichloropropane | **<0.60** | 0.60 | ug/L | | <0.60 | | | | 30 | |
| sec-Butylbenzene | **<0.60** | 0.60 | ug/L | | <0.60 | | | | 30 | |
| Isopropylbenzene | **<0.60** | 0.60 | ug/L | | <0.60 | | | | 30 | |
| n-Propylbenzene | **<0.60** | 0.60 | ug/L | | <0.60 | | | | 30 | |
| 4-Isopropyltoluene | **<0.60** | 0.60 | ug/L | | <0.60 | | | | 30 | |
| n-Butylbenzene | **<0.60** | 0.60 | ug/L | | <0.60 | | | | 200 | |
| *Surrogate: 4-Bromofluorobenzene* | *0.152* | | *ug/L* | *0.14* | | *106* | *70-130* | | | |
| *Batch B6E1633 - *** DEFAULT PREP **** | | | | | | | | | | |
| **Blank (B6E1633-BLK1)** | | | | Prepared & Analyzed: 05/16/16 | | | | | | |
| Acetone | <0.010 | 0.010 | ug/L | | | | | | | |
| Allyl chloride | <0.010 | 0.010 | ug/L | | | | | | | |

**Viorel Vasile**
Operations Manager

# LABORATORY ANALYSIS RESULTS

**Client:** Stantec (TO)
**Project No:** 2057123300
**Project Name:** Grayson Power Plant Glendale Phase II

**AA Project No:** A732178
**Date Received:** 05/03/16
**Date Reported:** 05/18/16

| Analyte | Result | Reporting Limit | Units | Spike Level | Source Result | %REC | %REC Limits | RPD | RPD Limit | Notes |
|---|---|---|---|---|---|---|---|---|---|---|
| **VOCs by GCMS EPA TO-15 - Quality Control** | | | | | | | | | | |
| *Batch B6E1633 - *** DEFAULT PREP **** | | | | | | | | | | |
| **Blank (B6E1633-BLK1) Continued** | | | | Prepared & Analyzed: 05/16/16 | | | | | | |
| tert-Amyl Methyl Ether (TAME) | <0.010 | 0.010 | ug/L | | | | | | | |
| Benzene | <0.010 | 0.010 | ug/L | | | | | | | |
| Benzyl chloride | <0.010 | 0.010 | ug/L | | | | | | | |
| Bromodichloromethane | <0.010 | 0.010 | ug/L | | | | | | | |
| Bromoform | <0.010 | 0.010 | ug/L | | | | | | | |
| Bromomethane | <0.010 | 0.010 | ug/L | | | | | | | |
| 1,3-Butadiene | <0.010 | 0.010 | ug/L | | | | | | | |
| 2-Butanone (MEK) | <0.010 | 0.010 | ug/L | | | | | | | |
| tert-Butyl alcohol (TBA) | <0.010 | 0.010 | ug/L | | | | | | | |
| Carbon Disulfide | <0.010 | 0.010 | ug/L | | | | | | | |
| Carbon Tetrachloride | <0.010 | 0.010 | ug/L | | | | | | | |
| Chlorobenzene | <0.010 | 0.010 | ug/L | | | | | | | |
| Chloroethane | <0.010 | 0.010 | ug/L | | | | | | | |
| Chloroform | <0.010 | 0.010 | ug/L | | | | | | | |
| Chloromethane | <0.010 | 0.010 | ug/L | | | | | | | |
| Cyclohexane | <0.010 | 0.010 | ug/L | | | | | | | |
| Dibromochloromethane | <0.010 | 0.010 | ug/L | | | | | | | |
| 1,2-Dibromoethane (EDB) | <0.010 | 0.010 | ug/L | | | | | | | |
| 1,2-Dichlorobenzene | <0.010 | 0.010 | ug/L | | | | | | | |
| 1,3-Dichlorobenzene | <0.010 | 0.010 | ug/L | | | | | | | |
| 1,4-Dichlorobenzene | <0.010 | 0.010 | ug/L | | | | | | | |
| Dichlorodifluoromethane (R12) | <0.010 | 0.010 | ug/L | | | | | | | |
| 1,1-Dichloroethane | <0.010 | 0.010 | ug/L | | | | | | | |
| 1,2-Dichloroethane (EDC) | <0.010 | 0.010 | ug/L | | | | | | | |
| cis-1,2-Dichloroethylene | <0.010 | 0.010 | ug/L | | | | | | | |
| 1,1-Dichloroethylene | <0.010 | 0.010 | ug/L | | | | | | | |
| trans-1,2-Dichloroethylene | <0.010 | 0.010 | ug/L | | | | | | | |
| 1,2-Dichloropropane | <0.010 | 0.010 | ug/L | | | | | | | |
| trans-1,3-Dichloropropylene | <0.010 | 0.010 | ug/L | | | | | | | |
| cis-1,3-Dichloropropylene | <0.010 | 0.010 | ug/L | | | | | | | |
| Dichlorotetrafluoroethane | <0.010 | 0.010 | ug/L | | | | | | | |

**Viorel Vasile**
Operations Manager

# LABORATORY ANALYSIS RESULTS

**Client:** Stantec (TO)
**Project No:** 2057123300
**Project Name:** Grayson Power Plant Glendale Phase II

**AA Project No:** A732178
**Date Received:** 05/03/16
**Date Reported:** 05/18/16

| Analyte | Result | Reporting Limit | Units | Spike Level | Source Result | %REC | %REC Limits | RPD | RPD Limit | Notes |
|---|---|---|---|---|---|---|---|---|---|---|
| **VOCs by GCMS EPA TO-15 - Quality Control** | | | | | | | | | | |
| *Batch B6E1633 - *** DEFAULT PREP **** | | | | | | | | | | |
| **Blank (B6E1633-BLK1) Continued** | | | | Prepared & Analyzed: 05/16/16 | | | | | | |
| Diisopropyl ether (DIPE) | <0.010 | 0.010 | ug/L | | | | | | | |
| 1,4-Dioxane | <0.010 | 0.010 | ug/L | | | | | | | |
| Ethanol | <0.010 | 0.010 | ug/L | | | | | | | |
| Ethyl Acetate | <0.010 | 0.010 | ug/L | | | | | | | |
| Ethylbenzene | <0.010 | 0.010 | ug/L | | | | | | | |
| Ethyl-tert-Butyl Ether (ETBE) | <0.010 | 0.010 | ug/L | | | | | | | |
| 4-Ethyltoluene | <0.010 | 0.010 | ug/L | | | | | | | |
| Heptane | <0.010 | 0.010 | ug/L | | | | | | | |
| Hexachlorobutadiene | <0.010 | 0.010 | ug/L | | | | | | | |
| n-Hexane | <0.010 | 0.010 | ug/L | | | | | | | |
| 2-Hexanone (MBK) | <0.010 | 0.010 | ug/L | | | | | | | |
| Isopropanol (IPA) | <0.010 | 0.010 | ug/L | | | | | | | |
| Methyl-tert-Butyl Ether (MTBE) | <0.010 | 0.010 | ug/L | | | | | | | |
| Methylene Chloride | <0.010 | 0.010 | ug/L | | | | | | | |
| 4-Methyl-2-pentanone (MIBK) | <0.010 | 0.010 | ug/L | | | | | | | |
| Naphthalene | <0.010 | 0.010 | ug/L | | | | | | | |
| Propylene | <0.010 | 0.010 | ug/L | | | | | | | |
| Styrene | <0.010 | 0.010 | ug/L | | | | | | | |
| 1,1,2,2-Tetrachloroethane | <0.010 | 0.010 | ug/L | | | | | | | |
| Tetrachloroethylene (PCE) | <0.010 | 0.010 | ug/L | | | | | | | |
| Tetrahydrofuran (THF) | <0.010 | 0.010 | ug/L | | | | | | | |
| Toluene | <0.010 | 0.010 | ug/L | | | | | | | |
| 1,2,4-Trichlorobenzene | <0.010 | 0.010 | ug/L | | | | | | | |
| 1,1,2-Trichloroethane | <0.010 | 0.010 | ug/L | | | | | | | |
| 1,1,1-Trichloroethane | <0.010 | 0.010 | ug/L | | | | | | | |
| Trichloroethylene (TCE) | <0.010 | 0.010 | ug/L | | | | | | | |
| Trichlorofluoromethane (R11) | <0.010 | 0.010 | ug/L | | | | | | | |
| 1,1,2-Trichloro-1,2,2-trifluoroethane (R113) | <0.010 | 0.010 | ug/L | | | | | | | |
| 1,3,5-Trimethylbenzene | <0.010 | 0.010 | ug/L | | | | | | | |
| 1,2,4-Trimethylbenzene | <0.010 | 0.010 | ug/L | | | | | | | |
| 2,2,4-Trimethylpentane | <0.010 | 0.010 | ug/L | | | | | | | |

**Viorel Vasile**
Operations Manager

# LABORATORY ANALYSIS RESULTS

**Client:** Stantec (TO)
**Project No:** 2057123300
**Project Name:** Grayson Power Plant Glendale Phase II

**AA Project No:** A732178
**Date Received:** 05/03/16
**Date Reported:** 05/18/16

| Analyte | Result | Reporting Limit | Units | Spike Level | Source Result | %REC | %REC Limits | RPD | RPD Limit | Notes |
|---|---|---|---|---|---|---|---|---|---|---|
| **VOCs by GCMS EPA TO-15 - Quality Control** | | | | | | | | | | |
| *Batch B6E1633 - *** DEFAULT PREP **** | | | | | | | | | | |
| **Blank (B6E1633-BLK1) Continued** | | | | Prepared & Analyzed: 05/16/16 | | | | | | |
| Vinyl acetate | <0.010 | 0.010 | ug/L | | | | | | | |
| Vinyl bromide | <0.010 | 0.010 | ug/L | | | | | | | |
| Vinyl chloride | <0.010 | 0.010 | ug/L | | | | | | | |
| o-Xylene | <0.010 | 0.010 | ug/L | | | | | | | |
| m,p-Xylenes | <0.010 | 0.010 | ug/L | | | | | | | |
| 1,2,3-Trichloropropane | <0.010 | 0.010 | ug/L | | | | | | | |
| sec-Butylbenzene | <0.010 | 0.010 | ug/L | | | | | | | |
| Isopropylbenzene | <0.010 | 0.010 | ug/L | | | | | | | |
| n-Propylbenzene | <0.010 | 0.010 | ug/L | | | | | | | |
| 4-Isopropyltoluene | <0.010 | 0.010 | ug/L | | | | | | | |
| n-Butylbenzene | <0.010 | 0.010 | ug/L | | | | | | | |
| *Surrogate: 4-Bromofluorobenzene* | *0.151* | | *ug/L* | *0.14* | | *106* | *70-130* | | | |
| **LCS (B6E1633-BS1)** | | | | Prepared & Analyzed: 05/16/16 | | | | | | |
| Acetone | **0.0242** | 0.010 | ug/L | 0.024 | | 102 | 70-130 | | | |
| Benzene | **0.0265** | 0.010 | ug/L | 0.032 | | 83.0 | 70-130 | | | |
| Benzyl chloride | **0.0628** | 0.010 | ug/L | 0.052 | | 121 | 70-130 | | | |
| Bromodichloromethane | **0.0781** | 0.010 | ug/L | 0.067 | | 116 | 70-130 | | | |
| Bromoform | **0.120** | 0.010 | ug/L | 0.10 | | 117 | 70-130 | | | |
| Bromomethane | **0.0302** | 0.010 | ug/L | 0.039 | | 77.8 | 70-130 | | | |
| 2-Butanone (MEK) | **0.0274** | 0.010 | ug/L | 0.029 | | 92.8 | 70-130 | | | |
| Carbon Disulfide | **0.0291** | 0.010 | ug/L | 0.031 | | 93.5 | 70-130 | | | |
| Carbon Tetrachloride | **0.0764** | 0.010 | ug/L | 0.063 | | 121 | 70-130 | | | |
| Chlorobenzene | **0.0463** | 0.010 | ug/L | 0.046 | | 100 | 70-130 | | | |
| Chloroethane | **0.0182** | 0.010 | ug/L | 0.026 | | 68.8 | 70-130 | | | *** |
| Chloroform | **0.0521** | 0.010 | ug/L | 0.049 | | 107 | 70-130 | | | |
| Chloromethane | **0.0219** | 0.010 | ug/L | 0.021 | | 106 | 70-130 | | | |
| Dibromochloromethane | **0.0966** | 0.010 | ug/L | 0.085 | | 113 | 70-130 | | | |
| 1,2-Dibromoethane (EDB) | **0.0804** | 0.010 | ug/L | 0.077 | | 105 | 70-130 | | | |
| 1,2-Dichlorobenzene | **0.0691** | 0.010 | ug/L | 0.060 | | 115 | 70-130 | | | |
| 1,3-Dichlorobenzene | **0.0637** | 0.010 | ug/L | 0.060 | | 106 | 70-130 | | | |
| 1,4-Dichlorobenzene | **0.0680** | 0.010 | ug/L | 0.060 | | 113 | 70-130 | | | |

**Viorel Vasile**
Operations Manager

# LABORATORY ANALYSIS RESULTS

**Client:** Stantec (TO)
**Project No:** 2057123300
**Project Name:** Grayson Power Plant Glendale Phase II

**AA Project No:** A732178
**Date Received:** 05/03/16
**Date Reported:** 05/18/16

| Analyte | Result | Reporting Limit | Units | Spike Level | Source Result | %REC | %REC Limits | RPD | RPD Limit | Notes |
|---|---|---|---|---|---|---|---|---|---|---|
| **VOCs by GCMS EPA TO-15 - Quality Control** | | | | | | | | | | |
| *Batch B6E1633 - *** DEFAULT PREP **** | | | | | | | | | | |
| **LCS (B6E1633-BS1) Continued** | | | | Prepared & Analyzed: 05/16/16 | | | | | | |
| Dichlorodifluoromethane (R12) | **0.0586** | 0.010 | ug/L | 0.049 | | 118 | 70-130 | | | |
| 1,1-Dichloroethane | **0.0416** | 0.010 | ug/L | 0.040 | | 103 | 70-130 | | | |
| 1,2-Dichloroethane (EDC) | **0.0468** | 0.010 | ug/L | 0.040 | | 116 | 70-130 | | | |
| cis-1,2-Dichloroethylene | **0.0399** | 0.010 | ug/L | 0.040 | | 101 | 70-130 | | | |
| 1,1-Dichloroethylene | **0.0427** | 0.010 | ug/L | 0.040 | | 108 | 70-130 | | | |
| trans-1,2-Dichloroethylene | **0.0398** | 0.010 | ug/L | 0.040 | | 100 | 70-130 | | | |
| 1,2-Dichloropropane | **0.0444** | 0.010 | ug/L | 0.046 | | 96.1 | 70-130 | | | |
| trans-1,3-Dichloropropylene | **0.0482** | 0.010 | ug/L | 0.045 | | 106 | 70-130 | | | |
| cis-1,3-Dichloropropylene | **0.0464** | 0.010 | ug/L | 0.045 | | 102 | 70-130 | | | |
| Dichlorotetrafluoroethane | **0.0845** | 0.010 | ug/L | 0.070 | | 121 | 70-130 | | | |
| Ethylbenzene | **0.0461** | 0.010 | ug/L | 0.043 | | 106 | 70-130 | | | |
| 4-Ethyltoluene | **0.0566** | 0.010 | ug/L | 0.049 | | 115 | 70-130 | | | |
| Hexachlorobutadiene | **0.125** | 0.010 | ug/L | 0.11 | | 117 | 70-130 | | | |
| 2-Hexanone (MBK) | **0.0456** | 0.010 | ug/L | 0.041 | | 111 | 70-130 | | | |
| Isopropanol (IPA) | **0.0261** | 0.010 | ug/L | 0.025 | | 106 | 70-130 | | | |
| Methylene Chloride | **0.0352** | 0.010 | ug/L | 0.035 | | 101 | 70-130 | | | |
| 4-Methyl-2-pentanone (MIBK) | **0.0438** | 0.010 | ug/L | 0.041 | | 107 | 70-130 | | | |
| Styrene | **0.0420** | 0.010 | ug/L | 0.043 | | 98.6 | 70-130 | | | |
| 1,1,2,2-Tetrachloroethane | **0.0694** | 0.010 | ug/L | 0.069 | | 101 | 70-130 | | | |
| Tetrachloroethylene (PCE) | **0.0785** | 0.010 | ug/L | 0.068 | | 116 | 70-130 | | | |
| Toluene | **0.0384** | 0.010 | ug/L | 0.038 | | 102 | 70-130 | | | |
| 1,2,4-Trichlorobenzene | **0.0869** | 0.010 | ug/L | 0.074 | | 117 | 70-130 | | | |
| 1,1,2-Trichloroethane | **0.0570** | 0.010 | ug/L | 0.055 | | 104 | 70-130 | | | |
| 1,1,1-Trichloroethane | **0.0613** | 0.010 | ug/L | 0.055 | | 112 | 70-130 | | | |
| Trichloroethylene (TCE) | **0.0550** | 0.010 | ug/L | 0.054 | | 102 | 70-130 | | | |
| Trichlorofluoromethane (R11) | **0.0660** | 0.010 | ug/L | 0.056 | | 117 | 70-130 | | | |
| 1,1,2-Trichloro-1,2,2-trifluoroethane (R113) | **0.0782** | 0.010 | ug/L | 0.077 | | 102 | 70-130 | | | |
| 1,3,5-Trimethylbenzene | **0.0568** | 0.010 | ug/L | 0.049 | | 116 | 70-130 | | | |
| 1,2,4-Trimethylbenzene | **0.0557** | 0.010 | ug/L | 0.049 | | 113 | 70-130 | | | |
| Vinyl acetate | **0.0351** | 0.010 | ug/L | 0.035 | | 99.6 | 70-130 | | | |
| Vinyl chloride | **0.0267** | 0.010 | ug/L | 0.026 | | 104 | 70-130 | | | |

**Viorel Vasile**
Operations Manager

# LABORATORY ANALYSIS RESULTS

**Client:** Stantec (TO)
**Project No:** 2057123300
**Project Name:** Grayson Power Plant Glendale Phase II

**AA Project No:** A732178
**Date Received:** 05/03/16
**Date Reported:** 05/18/16

| Analyte | Result | Reporting Limit | Units | Spike Level | Source Result | %REC | %REC Limits | RPD | RPD Limit | Notes |
|---|---|---|---|---|---|---|---|---|---|---|
| **VOCs by GCMS EPA TO-15 - Quality Control** | | | | | | | | | | |
| *Batch B6E1633 - *** DEFAULT PREP **** | | | | | | | | | | |
| **LCS (B6E1633-BS1) Continued** | | | | Prepared & Analyzed: 05/16/16 | | | | | | |
| o-Xylene | **0.0474** | 0.010 | ug/L | 0.043 | | 109 | 70-130 | | | |
| m,p-Xylenes | **0.0975** | 0.010 | ug/L | 0.087 | | 112 | 70-130 | | | |
| 1,2,3-Trichloropropane | **0.0579** | 0.010 | ug/L | 0.060 | | 96.0 | 70-130 | | | |
| sec-Butylbenzene | **0.0562** | 0.010 | ug/L | 0.055 | | 102 | 70-130 | | | |
| Isopropylbenzene | **0.0479** | 0.010 | ug/L | 0.049 | | 97.4 | 70-130 | | | |
| n-Propylbenzene | **0.0505** | 0.010 | ug/L | 0.049 | | 103 | 70-130 | | | |
| 4-Isopropyltoluene | **0.0573** | 0.010 | ug/L | 0.055 | | 104 | 70-130 | | | |
| *Surrogate: 4-Bromofluorobenzene* | *0.153* | | *ug/L* | *0.14* | | *107* | *70-130* | | | |
| **LCS Dup (B6E1633-BSD1)** | | | | Prepared: 05/16/16 Analyzed: 05/17/16 | | | | | | |
| Acetone | **0.0188** | 0.010 | ug/L | 0.024 | | 79.2 | 70-130 | 24.9 | 30 | |
| Benzene | **0.0259** | 0.010 | ug/L | 0.032 | | 81.2 | 70-130 | 2.19 | 30 | |
| Benzyl chloride | **0.0650** | 0.010 | ug/L | 0.052 | | 126 | 70-130 | 3.57 | 30 | |
| Bromodichloromethane | **0.0732** | 0.010 | ug/L | 0.067 | | 109 | 70-130 | 6.38 | 30 | |
| Bromoform | **0.119** | 0.010 | ug/L | 0.10 | | 115 | 70-130 | 1.04 | 30 | |
| Bromomethane | **0.0285** | 0.010 | ug/L | 0.039 | | 73.4 | 70-130 | 5.82 | 30 | |
| 2-Butanone (MEK) | **0.0269** | 0.010 | ug/L | 0.029 | | 91.2 | 70-130 | 1.74 | 30 | |
| Carbon Disulfide | **0.0295** | 0.010 | ug/L | 0.031 | | 94.7 | 70-130 | 1.28 | 30 | |
| Carbon Tetrachloride | **0.0764** | 0.010 | ug/L | 0.063 | | 122 | 70-130 | 0.0823 | 30 | |
| Chlorobenzene | **0.0481** | 0.010 | ug/L | 0.046 | | 104 | 70-130 | 3.90 | 30 | |
| Chloroethane | **0.0168** | 0.010 | ug/L | 0.026 | | 63.5 | 70-130 | 8.01 | 30 | *** |
| Chloroform | **0.0516** | 0.010 | ug/L | 0.049 | | 106 | 70-130 | 1.04 | 30 | |
| Chloromethane | **0.0193** | 0.010 | ug/L | 0.021 | | 93.5 | 70-130 | 12.5 | 30 | |
| Dibromochloromethane | **0.0984** | 0.010 | ug/L | 0.085 | | 116 | 70-130 | 1.83 | 30 | |
| 1,2-Dibromoethane (EDB) | **0.0813** | 0.010 | ug/L | 0.077 | | 106 | 70-130 | 1.05 | 30 | |
| 1,2-Dichlorobenzene | **0.0709** | 0.010 | ug/L | 0.060 | | 118 | 70-130 | 2.49 | 30 | |
| 1,3-Dichlorobenzene | **0.0724** | 0.010 | ug/L | 0.060 | | 120 | 70-130 | 12.8 | 30 | |
| 1,4-Dichlorobenzene | **0.0713** | 0.010 | ug/L | 0.060 | | 119 | 70-130 | 4.75 | 30 | |
| Dichlorodifluoromethane (R12) | **0.0562** | 0.010 | ug/L | 0.049 | | 114 | 70-130 | 4.14 | 30 | |
| 1,1-Dichloroethane | **0.0410** | 0.010 | ug/L | 0.040 | | 101 | 70-130 | 1.47 | 30 | |
| 1,2-Dichloroethane (EDC) | **0.0462** | 0.010 | ug/L | 0.040 | | 114 | 70-130 | 1.22 | 30 | |
| cis-1,2-Dichloroethylene | **0.0408** | 0.010 | ug/L | 0.040 | | 103 | 70-130 | 2.26 | 30 | |

**Viorel Vasile**
Operations Manager

# LABORATORY ANALYSIS RESULTS

**Client:** Stantec (TO)
**Project No:** 2057123300
**Project Name:** Grayson Power Plant Glendale Phase II

**AA Project No:** A732178
**Date Received:** 05/03/16
**Date Reported:** 05/18/16

| Analyte | Result | Reporting Limit | Units | Spike Level | Source Result | %REC | %REC Limits | RPD | RPD Limit | Notes |
|---|---|---|---|---|---|---|---|---|---|---|
| **VOCs by GCMS EPA TO-15 - Quality Control** | | | | | | | | | | |
| *Batch B6E1633 - *** DEFAULT PREP **** | | | | | | | | | | |
| **LCS Dup (B6E1633-BSD1) Continued** | | | | Prepared: 05/16/16 Analyzed: 05/17/16 | | | | | | |
| 1,1-Dichloroethylene | **0.0444** | 0.010 | ug/L | 0.040 | | 112 | 70-130 | 3.82 | 30 | |
| trans-1,2-Dichloroethylene | **0.0400** | 0.010 | ug/L | 0.040 | | 101 | 70-130 | 0.397 | 30 | |
| 1,2-Dichloropropane | **0.0450** | 0.010 | ug/L | 0.046 | | 97.3 | 70-130 | 1.24 | 30 | |
| trans-1,3-Dichloropropylene | **0.0463** | 0.010 | ug/L | 0.045 | | 102 | 70-130 | 3.94 | 30 | |
| cis-1,3-Dichloropropylene | **0.0469** | 0.010 | ug/L | 0.045 | | 103 | 70-130 | 1.17 | 30 | |
| Dichlorotetrafluoroethane | **0.0795** | 0.010 | ug/L | 0.070 | | 114 | 70-130 | 6.14 | 30 | |
| Ethylbenzene | **0.0461** | 0.010 | ug/L | 0.043 | | 106 | 70-130 | 0.0942 | 30 | |
| 4-Ethyltoluene | **0.0571** | 0.010 | ug/L | 0.049 | | 116 | 70-130 | 0.951 | 30 | |
| Hexachlorobutadiene | **0.123** | 0.010 | ug/L | 0.11 | | 115 | 70-130 | 1.29 | 30 | |
| 2-Hexanone (MBK) | **0.0463** | 0.010 | ug/L | 0.041 | | 113 | 70-130 | 1.51 | 30 | |
| Isopropanol (IPA) | **0.0255** | 0.010 | ug/L | 0.025 | | 104 | 70-130 | 2.10 | 30 | |
| Methylene Chloride | **0.0351** | 0.010 | ug/L | 0.035 | | 101 | 70-130 | 0.297 | 30 | |
| 4-Methyl-2-pentanone (MIBK) | **0.0453** | 0.010 | ug/L | 0.041 | | 111 | 70-130 | 3.40 | 30 | |
| Styrene | **0.0439** | 0.010 | ug/L | 0.043 | | 103 | 70-130 | 4.37 | 30 | |
| 1,1,2,2-Tetrachloroethane | **0.0690** | 0.010 | ug/L | 0.069 | | 100 | 70-130 | 0.595 | 30 | |
| Tetrachloroethylene (PCE) | **0.0808** | 0.010 | ug/L | 0.068 | | 119 | 70-130 | 2.90 | 30 | |
| Toluene | **0.0382** | 0.010 | ug/L | 0.038 | | 101 | 70-130 | 0.590 | 30 | |
| 1,2,4-Trichlorobenzene | **0.0925** | 0.010 | ug/L | 0.074 | | 125 | 70-130 | 6.29 | 30 | |
| 1,1,2-Trichloroethane | **0.0567** | 0.010 | ug/L | 0.055 | | 104 | 70-130 | 0.576 | 30 | |
| 1,1,1-Trichloroethane | **0.0584** | 0.010 | ug/L | 0.055 | | 107 | 70-130 | 4.92 | 30 | |
| Trichloroethylene (TCE) | **0.0575** | 0.010 | ug/L | 0.054 | | 107 | 70-130 | 4.39 | 30 | |
| Trichlorofluoromethane (R11) | **0.0636** | 0.010 | ug/L | 0.056 | | 113 | 70-130 | 3.64 | 30 | |
| 1,1,2-Trichloro-1,2,2-trifluoroethane (R113) | **0.0781** | 0.010 | ug/L | 0.077 | | 102 | 70-130 | 0.0981 | 30 | |
| 1,3,5-Trimethylbenzene | **0.0568** | 0.010 | ug/L | 0.049 | | 116 | 70-130 | 0.0865 | 30 | |
| 1,2,4-Trimethylbenzene | **0.0577** | 0.010 | ug/L | 0.049 | | 117 | 70-130 | 3.55 | 30 | |
| Vinyl acetate | **0.0328** | 0.010 | ug/L | 0.035 | | 93.1 | 70-130 | 6.75 | 30 | |
| Vinyl chloride | **0.0258** | 0.010 | ug/L | 0.026 | | 101 | 70-130 | 3.21 | 30 | |
| o-Xylene | **0.0488** | 0.010 | ug/L | 0.043 | | 112 | 70-130 | 2.89 | 30 | |
| m,p-Xylenes | **0.0997** | 0.010 | ug/L | 0.087 | | 115 | 70-130 | 2.20 | 30 | |
| 1,2,3-Trichloropropane | **0.0588** | 0.010 | ug/L | 0.060 | | 97.5 | 70-130 | 1.55 | 30 | |
| sec-Butylbenzene | **0.0579** | 0.010 | ug/L | 0.055 | | 106 | 70-130 | 2.98 | 30 | |

**Viorel Vasile**
Operations Manager

# LABORATORY ANALYSIS RESULTS

**Client:** Stantec (TO)
**Project No:** 2057123300
**Project Name:** Grayson Power Plant Glendale Phase II

**AA Project No:** A732178
**Date Received:** 05/03/16
**Date Reported:** 05/18/16

| Analyte | Result | Reporting Limit | Units | Spike Level | Source Result | %REC | %REC Limits | RPD | RPD Limit | Notes |
|---|---|---|---|---|---|---|---|---|---|---|
| **VOCs by GCMS EPA TO-15 - Quality Control** | | | | | | | | | | |
| *Batch B6E1633 - *** DEFAULT PREP **** | | | | | | | | | | |
| **LCS Dup (B6E1633-BSD1) Continued** | | | | Prepared: 05/16/16 Analyzed: 05/17/16 | | | | | | |
| Isopropylbenzene | **0.0497** | 0.010 | ug/L | 0.049 | | 101 | 70-130 | 3.73 | 30 | |
| n-Propylbenzene | **0.0515** | 0.010 | ug/L | 0.049 | | 105 | 70-130 | 1.93 | 30 | |
| 4-Isopropyltoluene | **0.0589** | 0.010 | ug/L | 0.055 | | 107 | 70-130 | 2.84 | 30 | |
| *Surrogate: 4-Bromofluorobenzene* | *0.145* | | *ug/L* | *0.14* | | *101* | *70-130* | | | |
| **Duplicate (B6E1633-DUP1)** | | | | **Source: 6E03026-13** Prepared & Analyzed: 05/16/16 | | | | | | |
| Acetone | **<0.010** | 0.010 | ug/L | | <0.010 | | | | 30 | |
| Allyl chloride | **<0.010** | 0.010 | ug/L | | <0.010 | | | | 30 | |
| tert-Amyl Methyl Ether (TAME) | **<0.010** | 0.010 | ug/L | | <0.010 | | | | 30 | |
| Benzene | **<0.010** | 0.010 | ug/L | | <0.010 | | | | 30 | |
| Benzyl chloride | **<0.010** | 0.010 | ug/L | | <0.010 | | | | 30 | |
| Bromodichloromethane | **<0.010** | 0.010 | ug/L | | <0.010 | | | | 30 | |
| Bromoform | **<0.010** | 0.010 | ug/L | | <0.010 | | | | 30 | |
| Bromomethane | **<0.010** | 0.010 | ug/L | | <0.010 | | | | 30 | |
| 1,3-Butadiene | **<0.010** | 0.010 | ug/L | | <0.010 | | | | 30 | |
| 2-Butanone (MEK) | **<0.010** | 0.010 | ug/L | | <0.010 | | | | 30 | |
| tert-Butyl alcohol (TBA) | **<0.010** | 0.010 | ug/L | | <0.010 | | | | 30 | |
| Carbon Disulfide | **<0.010** | 0.010 | ug/L | | <0.010 | | | | 30 | |
| Carbon Tetrachloride | **<0.010** | 0.010 | ug/L | | <0.010 | | | | 30 | |
| Chlorobenzene | **<0.010** | 0.010 | ug/L | | <0.010 | | | | 30 | |
| Chloroethane | **<0.010** | 0.010 | ug/L | | <0.010 | | | | 30 | |
| Chloroform | **<0.010** | 0.010 | ug/L | | <0.010 | | | | 30 | |
| Chloromethane | **<0.010** | 0.010 | ug/L | | <0.010 | | | | 30 | |
| Cyclohexane | **<0.010** | 0.010 | ug/L | | <0.010 | | | | 30 | |
| Dibromochloromethane | **<0.010** | 0.010 | ug/L | | <0.010 | | | | 30 | |
| 1,2-Dibromoethane (EDB) | **<0.010** | 0.010 | ug/L | | <0.010 | | | | 30 | |
| 1,2-Dichlorobenzene | **<0.010** | 0.010 | ug/L | | <0.010 | | | | 30 | |
| 1,3-Dichlorobenzene | **<0.010** | 0.010 | ug/L | | <0.010 | | | | 30 | |
| 1,4-Dichlorobenzene | **<0.010** | 0.010 | ug/L | | <0.010 | | | | 30 | |
| Dichlorodifluoromethane (R12) | **<0.010** | 0.010 | ug/L | | <0.010 | | | | 30 | |
| 1,1-Dichloroethane | **<0.010** | 0.010 | ug/L | | <0.010 | | | | 30 | |
| 1,2-Dichloroethane (EDC) | **<0.010** | 0.010 | ug/L | | <0.010 | | | | 30 | |

**Viorel Vasile**
Operations Manager

# LABORATORY ANALYSIS RESULTS

**Client:** Stantec (TO)
**Project No:** 2057123300
**Project Name:** Grayson Power Plant Glendale Phase II

**AA Project No:** A732178
**Date Received:** 05/03/16
**Date Reported:** 05/18/16

| Analyte | Result | Reporting Limit | Units | Spike Level | Source Result | %REC | %REC Limits | RPD | RPD Limit | Notes |
|---|---|---|---|---|---|---|---|---|---|---|
| **VOCs by GCMS EPA TO-15 - Quality Control** | | | | | | | | | | |
| *Batch B6E1633 - *** DEFAULT PREP **** | | | | | | | | | | |
| **Duplicate (B6E1633-DUP1) Continued** | | | | **Source: 6E03026-13** | Prepared & Analyzed: 05/16/16 | | | | | |
| cis-1,2-Dichloroethylene | **<0.010** | 0.010 | ug/L | | <0.010 | | | | 30 | |
| 1,1-Dichloroethylene | **<0.010** | 0.010 | ug/L | | <0.010 | | | | 30 | |
| trans-1,2-Dichloroethylene | **<0.010** | 0.010 | ug/L | | <0.010 | | | | 30 | |
| 1,2-Dichloropropane | **<0.010** | 0.010 | ug/L | | <0.010 | | | | 30 | |
| trans-1,3-Dichloropropylene | **<0.010** | 0.010 | ug/L | | <0.010 | | | | 30 | |
| cis-1,3-Dichloropropylene | **<0.010** | 0.010 | ug/L | | <0.010 | | | | 30 | |
| Dichlorotetrafluoroethane | **<0.010** | 0.010 | ug/L | | <0.010 | | | | 30 | |
| Diisopropyl ether (DIPE) | **<0.010** | 0.010 | ug/L | | <0.010 | | | | 30 | |
| 1,4-Dioxane | **<0.010** | 0.010 | ug/L | | <0.010 | | | | 30 | |
| Ethanol | **<0.010** | 0.010 | ug/L | | <0.010 | | | | 30 | |
| Ethyl Acetate | **<0.010** | 0.010 | ug/L | | <0.010 | | | | 30 | |
| Ethylbenzene | **<0.010** | 0.010 | ug/L | | <0.010 | | | | 30 | |
| Ethyl-tert-Butyl Ether (ETBE) | **<0.010** | 0.010 | ug/L | | <0.010 | | | | 30 | |
| 4-Ethyltoluene | **<0.010** | 0.010 | ug/L | | <0.010 | | | | 30 | |
| Heptane | **<0.010** | 0.010 | ug/L | | <0.010 | | | | 30 | |
| Hexachlorobutadiene | **<0.010** | 0.010 | ug/L | | <0.010 | | | | 30 | |
| n-Hexane | **<0.010** | 0.010 | ug/L | | <0.010 | | | | 30 | |
| 2-Hexanone (MBK) | **<0.010** | 0.010 | ug/L | | <0.010 | | | | 30 | |
| Isopropanol (IPA) | **<0.010** | 0.010 | ug/L | | <0.010 | | | | 30 | |
| Methyl-tert-Butyl Ether (MTBE) | **<0.010** | 0.010 | ug/L | | <0.010 | | | | 30 | |
| Methylene Chloride | **<0.010** | 0.010 | ug/L | | <0.010 | | | | 30 | |
| 4-Methyl-2-pentanone (MIBK) | **<0.010** | 0.010 | ug/L | | <0.010 | | | | 30 | |
| Naphthalene | **<0.010** | 0.010 | ug/L | | <0.010 | | | | 30 | |
| Propylene | **<0.010** | 0.010 | ug/L | | <0.010 | | | | 30 | |
| Styrene | **<0.010** | 0.010 | ug/L | | <0.010 | | | | 30 | |
| 1,1,2,2-Tetrachloroethane | **<0.010** | 0.010 | ug/L | | <0.010 | | | | 30 | |
| Tetrachloroethylene (PCE) | **<0.010** | 0.010 | ug/L | | <0.010 | | | | 30 | |
| Tetrahydrofuran (THF) | **0.0105** | 0.010 | ug/L | | 0.0101 | | | 3.71 | 30 | |
| Toluene | **<0.010** | 0.010 | ug/L | | <0.010 | | | | 30 | |
| 1,2,4-Trichlorobenzene | **<0.010** | 0.010 | ug/L | | <0.010 | | | | 30 | |
| 1,1,2-Trichloroethane | **<0.010** | 0.010 | ug/L | | <0.010 | | | | 30 | |

**Viorel Vasile**
Operations Manager

# LABORATORY ANALYSIS RESULTS

**Client:** Stantec (TO)
**Project No:** 2057123300
**Project Name:** Grayson Power Plant Glendale Phase II

**AA Project No:** A732178
**Date Received:** 05/03/16
**Date Reported:** 05/18/16

| Analyte | Result | Reporting Limit | Units | Spike Level | Source Result | %REC | %REC Limits | RPD | RPD Limit | Notes |
|---|---|---|---|---|---|---|---|---|---|---|
| **VOCs by GCMS EPA TO-15 - Quality Control** | | | | | | | | | | |
| *Batch B6E1633 - *** DEFAULT PREP **** | | | | | | | | | | |
| **Duplicate (B6E1633-DUP1) Continued** | | **Source: 6E03026-13** | Prepared & Analyzed: 05/16/16 | | | | | | | |
| 1,1,1-Trichloroethane | **<0.010** | 0.010 | ug/L | | <0.010 | | | | 30 | |
| Trichloroethylene (TCE) | **<0.010** | 0.010 | ug/L | | <0.010 | | | | 30 | |
| Trichlorofluoromethane (R11) | **<0.010** | 0.010 | ug/L | | <0.010 | | | | 30 | |
| 1,1,2-Trichloro-1,2,2-trifluoroethane (R113) | **<0.010** | 0.010 | ug/L | | <0.010 | | | | 30 | |
| 1,3,5-Trimethylbenzene | **<0.010** | 0.010 | ug/L | | <0.010 | | | | 30 | |
| 1,2,4-Trimethylbenzene | **<0.010** | 0.010 | ug/L | | <0.010 | | | | 30 | |
| 2,2,4-Trimethylpentane | **<0.010** | 0.010 | ug/L | | <0.010 | | | | 30 | |
| Vinyl acetate | **<0.010** | 0.010 | ug/L | | <0.010 | | | | 30 | |
| Vinyl bromide | **<0.010** | 0.010 | ug/L | | <0.010 | | | | 30 | |
| Vinyl chloride | **<0.010** | 0.010 | ug/L | | <0.010 | | | | 30 | |
| o-Xylene | **<0.010** | 0.010 | ug/L | | <0.010 | | | | 30 | |
| m,p-Xylenes | **0.0134** | 0.010 | ug/L | | 0.0130 | | | 2.97 | 30 | |
| 1,2,3-Trichloropropane | **<0.010** | 0.010 | ug/L | | <0.010 | | | | 30 | |
| sec-Butylbenzene | **<0.010** | 0.010 | ug/L | | <0.010 | | | | 30 | |
| Isopropylbenzene | **<0.010** | 0.010 | ug/L | | <0.010 | | | | 30 | |
| n-Propylbenzene | **<0.010** | 0.010 | ug/L | | <0.010 | | | | 30 | |
| 4-Isopropyltoluene | **<0.010** | 0.010 | ug/L | | <0.010 | | | | 30 | |
| n-Butylbenzene | **<0.010** | 0.010 | ug/L | | <0.010 | | | | 200 | |
| *Surrogate: 4-Bromofluorobenzene* | *0.145* | | *ug/L* | *0.14* | | *102* | *70-130* | | | |

**Viorel Vasile**
Operations Manager

# LABORATORY ANALYSIS RESULTS

| | | | |
|---|---|---|---|
| **Client:** | Stantec (TO) | **AA Project No:** | A732178 |
| **Project No:** | 2057123300 | **Date Received:** | 05/03/16 |
| **Project Name:** | Grayson Power Plant Glendale Phase II | **Date Reported:** | 05/18/16 |

**Special Notes**

**[1] = ***** : Exceeds lower control limit

**Viorel Vasile**
Operations Manager

125034

Stantec

# CHAIN OF CUSTODY FORM

25864-F Business Center Dr., Redlands, CA 92374 (909) 335 6116, Fax (909) 335 6120

A732178/6E03026



Client Name/Address:
Stantec
25864-F Business Center Drive
Redlands, CA 92374

Project/PO Number: 2057123300

Laboratory: American Analytics

Project Manager: Carl Hasse
Email Address: Carl.Hasse@Stantec.com

Phone Number: 909 335 6116

Fax Number: 909 335-6120

Sampler: J. Sargent Joshua.Sargent@Stantec.com

Analysis Required

| Sample Description | Sample Matrix | Container Type | # of Cont. | Sampling Date | Sampling Time | Preservatives | VOC's & Oxygenates TO-15 | 6E03026 | Flow Controller Number | Special Instructions |
|---|---|---|---|---|---|---|---|---|---|---|
| SB-16-5-SV | SV | 1400mL | 1 | 5.2.16 | 0907 0917 | NA | X | -01 | 10A | Pi: -28 Pf: -4 |
| SB-16-11-SV | | Summa | | 5.2.16 | 0856 0913 | | X | -02 | 71 | Pi: -27 Pf: -5 |
| SB-15-5-SV | | Canister | | | 0938 0950 | | X | -03 | 44 | Pi: -27 Pf: -5 |
| SB-15-11-SV | | | | | 0945 1000 | | X | -04 | 48 | Pi: -28 Pf: -5 |
| SB-14-5-SV | | | | | 1012 1020 | | X | -05 | MM | Pi: -25 Pf: -5 |
| SB-14-15-SV | | | | | 1018 1037 | | X | -06 | 31A | Pi: -30 Pf: -5 |
| SB-12-5-SV | | | | | 1138 1151 | | X | -07 | 53 | Pi: -30 Pf: -5 |
| SB-12-15-SV | | | | | 1146 1157 | | X | -08 | 08 | Pi: -24 Pf: -5 |
| SB-12-30-SV | | | | | 1156 1206 | | X | -09 | 4A | Pi: -28 Pf: -5 |
| SB-8-5-SV | | | | | 1224 1230 | | X | -10 | NN | Pi: -29 Pf: unknown |
| SB-8-15-SV | | | | | 1228 1234 | | X | -11 | 16 | Pi: -28 Pf: -5 |
| SB-8-30-SV | | | | | 1241 1251 | | X | -12 | 37 | Pi: -29 Pf: -5 |

IPA used as tracer gas for SV Samples.

RECEIVED Date 5/3/16 Time 1332 TAT 10 Days Sign

| Relinquished By: | Date/Time: | Received By: | Date/Time: |
|---|---|---|---|
| [signature] | 5.3.16 1212 | [signature] | 5/3/16 1212 |
| [signature] | 5/3/16 1251 | [signature] | 5/3/16 1251 |
| Relinquished By: | Date/Time: | Received in Lab By: | Date/Time: |

Rush: Same day 72 hours; 24 hour 5 days; 48 hour normal

Sample Integrity: (Check) Intact X on ice X

**Note:** By relinquishing samples, client agrees to pay for the services requested on this chain of custody form and any additional analyses performed on this project. Payment for services is due within 30 days from the date of invoice. Sample(s) will be disposed of after 30 days.

125035

Stantec

# CHAIN OF CUSTODY FORM

25864-F Business Center Dr., Redlands, CA 92374 (909) 335-6116, Fax (909) 335-6120

A732178/6E03026



Client Name/Address:
Stantec
25864-F Business Center Drive
Redlands, CA 92374

Project/PO Number: 205712330 0

Laboratory: American Analytical

Project Manager: Carl Hasse
Email Address: Carl.Hasse@Stantec.com

Phone Number: 909-335-6116

Fax Number: 909 335 6120

Sampler: J. Sargent Joshua.Sargent@Stantec.com

Analysis Required

| Sample Description | Sample Matrix | Container Type | # of Cont. | Sampling Date | Sampling Time | Preservatives | Vol + oxygenates TO-15 | | | | | CE03026 | Flow Controller Number | Special Instructions |
|---|---|---|---|---|---|---|---|---|---|---|---|---|---|---|
| SB-6-5-SV | SV | 400mL | 1 | 5.2.16 | 1325 / 1336 | NA | X | | | | | -13 | BB | IPA used as tracer gas for all SV Samples Pi: 29 Pf: -5 |
| SB-6-15-SV | SV | Summa | 1 | 5.2.16 | 1334 / 1345 | NA | X | | | | | -14 | 4/4A | Pi: 21 Pf: -5 |
| SB-6-30-SV | SV | Canister | 1 | 5.2.16 | 1346 / 1353 | NA | X | | | | | -15 | 14 | Pi: -29 Pf: -5 |

REVIEWED Date 5/3/16 TAT N Days

| Relinquished By: | Date/Time: | Received By: | Date/Time: |
|---|---|---|---|
| [signature] | 5.3.16 1212 | [signature] | 5/3/16 1212 |
| [signature] | 5/3/16 1251 | [signature] | 5/3/16 1251 |
| Relinquished By: | Date/Time: | Received in Lab By: | Date/Time: |

Turn Around Time: Same day / 24 hour / 48 hour / 72 hours / 5 days / normal

Sample integrity: (Check)
intact X on ice

**Note:** By relinquishing samples, client agrees to pay for the services requested on this chain of custody form and any additional analyses performed on this project. Payment for services is due within 30 days from the date of invoice. Sample(s) will be disposed of after 30 days.

9765 Eton Avenue
Chatsworth
California 91311
Tel: (818) 998-5547
Fax: (818) 998-7258

May 13, 2016

Anuya Sawant

Stantec (TO)

290 Conejo Ridge Ave. Suite #200

Thousand Oaks, CA 91361

**Re : Grayson Power Plant Glendale Phase II / 2057123300**

**A732179 / 6E03027**

Enclosed is an analytical report for the above-referenced project. The samples included in this report were received on 05/03/16 12:51 and analyzed in accordance with the attached chain-of-custody.

Unless otherwise noted, all analytical testing was accomplished in accordance with the guidelines established in our Quality Assurance Program Manual, applicable standard operating procedures, and other related documentation. The results in this analytical report are limited to the samples tested and any reproduction thereof must be made in its entirety.

If you have any questions regarding this report or require additional information please call me at American Analytics.

Sincerely,

Viorel Vasile

Operations Manager

# LABORATORY ANALYSIS RESULTS

**Client:** Stantec (TO)
**Project No:** 2057123300
**Project Name:** Grayson Power Plant Glendale Phase II

**AA Project No:** A732179
**Date Received:** 05/03/16
**Date Reported:** 05/13/16

| Sample ID | Laboratory ID | Matrix | TAT | Date Sampled | Date Received |
|---|---|---|---|---|---|
| **7199 Hexavalent Chromium by IC - Low Level** | | | | | |
| MW-1 | 6E03027-01 | Water | 7 | 05/03/16 10:03 | 05/03/16 12:51 |
| MW-2 | 6E03027-02 | Water | 7 | 05/03/16 08:52 | 05/03/16 12:51 |
| B-7 | 6E03027-03 | Water | 7 | 05/03/16 10:49 | 05/03/16 12:51 |
| MW-9 | 6E03027-04 | Water | 7 | 05/03/16 11:54 | 05/03/16 12:51 |
| **8260B+OXY+TPHG** | | | | | |
| MW-1 | 6E03027-01 | Water | 7 | 05/03/16 10:03 | 05/03/16 12:51 |
| MW-2 | 6E03027-02 | Water | 7 | 05/03/16 08:52 | 05/03/16 12:51 |
| B-7 | 6E03027-03 | Water | 7 | 05/03/16 10:49 | 05/03/16 12:51 |
| MW-9 | 6E03027-04 | Water | 7 | 05/03/16 11:54 | 05/03/16 12:51 |
| Trip Blank | 6E03027-05 | Water | 7 | 05/03/16 00:00 | 05/03/16 12:51 |
| **CAM Metals Less Hg 6000/7000** | | | | | |
| MW-1 | 6E03027-01 | Water | 7 | 05/03/16 10:03 | 05/03/16 12:51 |
| MW-2 | 6E03027-02 | Water | 7 | 05/03/16 08:52 | 05/03/16 12:51 |
| B-7 | 6E03027-03 | Water | 7 | 05/03/16 10:49 | 05/03/16 12:51 |
| MW-9 | 6E03027-04 | Water | 7 | 05/03/16 11:54 | 05/03/16 12:51 |
| **Carbon Chain Characterization 8015M** | | | | | |
| MW-1 | 6E03027-01 | Water | 7 | 05/03/16 10:03 | 05/03/16 12:51 |

**Viorel Vasile**
Operations Manager

# LABORATORY ANALYSIS RESULTS

**Client:** Stantec (TO)
**Project No:** 2057123300
**Project Name:** Grayson Power Plant Glendale Phase II

**AA Project No:** A732179
**Date Received:** 05/03/16
**Date Reported:** 05/13/16

| Sample ID | Laboratory ID | Matrix | TAT | Date Sampled | Date Received |
|---|---|---|---|---|---|
| MW-2 | 6E03027-02 | Water | 7 | 05/03/16 08:52 | 05/03/16 12:51 |
| B-7 | 6E03027-03 | Water | 7 | 05/03/16 10:49 | 05/03/16 12:51 |
| MW-9 | 6E03027-04 | Water | 7 | 05/03/16 11:54 | 05/03/16 12:51 |
| **Mercury Total EPA 7470A/7471A** | | | | | |
| MW-1 | 6E03027-01 | Water | 7 | 05/03/16 10:03 | 05/03/16 12:51 |
| MW-2 | 6E03027-02 | Water | 7 | 05/03/16 08:52 | 05/03/16 12:51 |
| B-7 | 6E03027-03 | Water | 7 | 05/03/16 10:49 | 05/03/16 12:51 |
| MW-9 | 6E03027-04 | Water | 7 | 05/03/16 11:54 | 05/03/16 12:51 |

**Viorel Vasile**
Operations Manager

# LABORATORY ANALYSIS RESULTS

**Client:** Stantec (TO)
**Project No:** 2057123300
**Project Name:** Grayson Power Plant Glendale Phase II
**Method:** Cations by Ion Chromatography

**AA Project No:** A732179
**Date Received:** 05/03/16
**Date Reported:** 05/13/16

| AA I.D. No. | Client I.D. No. | Sampled | Prepared | Analyzed | Dilution | Result | Units | MRL |
|---|---|---|---|---|---|---|---|---|
| **7199 Hexavalent Chromium by IC - Low Level (EPA 7199)** | | | | | | | | |
| 6E03027-01 | MW-1 | 05/03/16 | 05/03/16 | 05/03/16 | 10 | **62** | ug/L | 0.3 |
| 6E03027-02 | MW-2 | 05/03/16 | 05/03/16 | 05/03/16 | 10 | **88** | ug/L | 0.3 |
| 6E03027-03 | B-7 | 05/03/16 | 05/03/16 | 05/03/16 | 10 | **52** | ug/L | 0.3 |
| 6E03027-04 | MW-9 | 05/03/16 | 05/03/16 | 05/03/16 | 10 | **24** | ug/L | 0.3 |

**Viorel Vasile**
Operations Manager

# LABORATORY ANALYSIS RESULTS

**Client:** Stantec (TO)
**Project No:** 2057123300
**Project Name:** Grayson Power Plant Glendale Phase II
**Method:** VOCs, OXY & TPH Gasoline by GC/MS

**AA Project No:** A732179
**Date Received:** 05/03/16
**Date Reported:** 05/13/16
**Units:** ug/L

| | | | | | |
|---|---|---|---|---|---|
| **Date Sampled:** | 05/03/16 | 05/03/16 | 05/03/16 | 05/03/16 | |
| **Date Prepared:** | 05/10/16 | 05/10/16 | 05/10/16 | 05/10/16 | |
| **Date Analyzed:** | 05/11/16 | 05/10/16 | 05/10/16 | 05/10/16 | |
| **AA ID No:** | 6E03027-01 | 6E03027-02 | 6E03027-03 | 6E03027-04 | |
| **Client ID No:** | MW-1 | MW-2 | B-7 | MW-9 | |
| **Matrix:** | Water | Water | Water | Water | |
| **Dilution Factor:** | 5 | 1 | 1 | 1 | MRL |
| **8260B+OXY+TPHG (EPA 8260B)** | | | | | |
| Acetone | <50 | <10 | <10 | <10 | 10 |
| tert-Amyl Methyl Ether (TAME) | <10 | <2.0 | <2.0 | <2.0 | 2.0 |
| Benzene | <2.5 | <0.50 | <0.50 | <0.50 | 0.50 |
| Bromobenzene | <2.5 | <0.50 | <0.50 | <0.50 | 0.50 |
| Bromochloromethane | <2.5 | <0.50 | <0.50 | <0.50 | 0.50 |
| Bromodichloromethane | <2.5 | <0.50 | <0.50 | <0.50 | 0.50 |
| Bromoform | <2.5 | <0.50 | <0.50 | <0.50 | 0.50 |
| Bromomethane | <2.5 | <0.50 | <0.50 | <0.50 | 0.50 |
| 2-Butanone (MEK) | <50 | <10 | <10 | <10 | 10 |
| tert-Butyl alcohol (TBA) | <50 | <10 | <10 | <10 | 10 |
| sec-Butylbenzene | <2.5 | <0.50 | <0.50 | <0.50 | 0.50 |
| tert-Butylbenzene | <2.5 | <0.50 | <0.50 | <0.50 | 0.50 |
| n-Butylbenzene | <2.5 | <0.50 | <0.50 | <0.50 | 0.50 |
| Carbon Disulfide | <2.5 | <0.50 | <0.50 | <0.50 | 0.50 |
| Carbon Tetrachloride | <2.5 | **4.2** | **5.3** | **3.5** | 0.50 |
| Chlorobenzene | <2.5 | <0.50 | <0.50 | <0.50 | 0.50 |
| Chloroethane | <2.5 | <0.50 | <0.50 | <0.50 | 0.50 |
| Chloroform | **4.4** | **3.8** | **4.2** | **3.2** | 0.50 |
| Chloromethane | <2.5 | <0.50 | <0.50 | <0.50 | 0.50 |
| 2-Chlorotoluene | <2.5 | <0.50 | <0.50 | <0.50 | 0.50 |
| 4-Chlorotoluene | <2.5 | <0.50 | <0.50 | <0.50 | 0.50 |
| 1,2-Dibromo-3-chloropropane | <5.0 | <1.0 | <1.0 | <1.0 | 1.0 |
| Dibromochloromethane | <2.5 | <0.50 | <0.50 | <0.50 | 0.50 |
| 1,2-Dibromoethane (EDB) | <2.5 | <0.50 | <0.50 | <0.50 | 0.50 |
| Dibromomethane | <2.5 | <0.50 | <0.50 | <0.50 | 0.50 |
| 1,3-Dichlorobenzene | <2.5 | <0.50 | <0.50 | <0.50 | 0.50 |
| 1,2-Dichlorobenzene | <2.5 | <0.50 | <0.50 | <0.50 | 0.50 |

**Viorel Vasile**
Operations Manager

# LABORATORY ANALYSIS RESULTS

**Client:** Stantec (TO)
**Project No:** 2057123300
**Project Name:** Grayson Power Plant Glendale Phase II
**Method:** VOCs, OXY & TPH Gasoline by GC/MS

**AA Project No:** A732179
**Date Received:** 05/03/16
**Date Reported:** 05/13/16
**Units:** ug/L

| | | | | | |
|---|---|---|---|---|---|
| **Date Sampled:** | 05/03/16 | 05/03/16 | 05/03/16 | 05/03/16 | |
| **Date Prepared:** | 05/10/16 | 05/10/16 | 05/10/16 | 05/10/16 | |
| **Date Analyzed:** | 05/11/16 | 05/10/16 | 05/10/16 | 05/10/16 | |
| **AA ID No:** | 6E03027-01 | 6E03027-02 | 6E03027-03 | 6E03027-04 | |
| **Client ID No:** | MW-1 | MW-2 | B-7 | MW-9 | |
| **Matrix:** | Water | Water | Water | Water | |
| **Dilution Factor:** | 5 | 1 | 1 | 1 | MRL |
| **8260B+OXY+TPHG (EPA 8260B) (continued)** | | | | | |
| 1,4-Dichlorobenzene | <2.5 | <0.50 | <0.50 | <0.50 | 0.50 |
| Dichlorodifluoromethane (R12) | <2.5 | <0.50 | <0.50 | <0.50 | 0.50 |
| 1,1-Dichloroethane | **6.0** | **4.5** | **5.2** | **3.3** | 0.50 |
| 1,2-Dichloroethane (EDC) | <2.5 | <0.50 | **1.2** | <0.50 | 0.50 |
| 1,1-Dichloroethylene | **42** | **31** | **40** | **19** | 0.50 |
| trans-1,2-Dichloroethylene | <2.5 | <0.50 | <0.50 | <0.50 | 0.50 |
| cis-1,2-Dichloroethylene | **16** | **10** | **8.0** | **6.7** | 0.50 |
| 1,2-Dichloropropane | <2.5 | <0.50 | <0.50 | <0.50 | 0.50 |
| 2,2-Dichloropropane | <2.5 | <0.50 | <0.50 | <0.50 | 0.50 |
| 1,3-Dichloropropane | <2.5 | <0.50 | <0.50 | <0.50 | 0.50 |
| cis-1,3-Dichloropropylene | <2.5 | <0.50 | <0.50 | <0.50 | 0.50 |
| trans-1,3-Dichloropropylene | <2.5 | <0.50 | <0.50 | <0.50 | 0.50 |
| 1,1-Dichloropropylene | <2.5 | <0.50 | <0.50 | <0.50 | 0.50 |
| Diisopropyl ether (DIPE) | <10 | <2.0 | <2.0 | <2.0 | 2.0 |
| Ethylbenzene | <2.5 | <0.50 | <0.50 | <0.50 | 0.50 |
| Ethyl-tert-Butyl Ether (ETBE) | <10 | <2.0 | <2.0 | <2.0 | 2.0 |
| Gasoline Range Organics (GRO) | **750 [1] [2]** | **780 [1] [2]** | **960 [1] [2]** | **600 [1] [2]** | 100 |
| Hexachlorobutadiene | <5.0 | <1.0 | <1.0 | <1.0 | 1.0 |
| 2-Hexanone (MBK) | <50 | <10 | <10 | <10 | 10 |
| Isopropylbenzene | <2.5 | <0.50 | <0.50 | <0.50 | 0.50 |
| 4-Isopropyltoluene | <5.0 | <1.0 | <1.0 | <1.0 | 1.0 |
| Methyl-tert-Butyl Ether (MTBE) | <10 | <2.0 | <2.0 | <2.0 | 2.0 |
| Methylene Chloride | <25 | <5.0 | <5.0 | <5.0 | 5.0 |
| 4-Methyl-2-pentanone (MIBK) | <50 | <10 | <10 | <10 | 10 |
| Naphthalene | <10 | <2.0 | <2.0 | <2.0 | 2.0 |
| n-Propylbenzene | <2.5 | <0.50 | <0.50 | <0.50 | 0.50 |

**Viorel Vasile**
Operations Manager

# LABORATORY ANALYSIS RESULTS

**Client:** Stantec (TO)
**Project No:** 2057123300
**Project Name:** Grayson Power Plant Glendale Phase II
**Method:** VOCs, OXY & TPH Gasoline by GC/MS

**AA Project No:** A732179
**Date Received:** 05/03/16
**Date Reported:** 05/13/16
**Units:** ug/L

| | | | | | |
|---|---|---|---|---|---|
| **Date Sampled:** | 05/03/16 | 05/03/16 | 05/03/16 | 05/03/16 | |
| **Date Prepared:** | 05/10/16 | 05/10/16 | 05/10/16 | 05/10/16 | |
| **Date Analyzed:** | 05/11/16 | 05/10/16 | 05/10/16 | 05/10/16 | |
| **AA ID No:** | 6E03027-01 | 6E03027-02 | 6E03027-03 | 6E03027-04 | |
| **Client ID No:** | MW-1 | MW-2 | B-7 | MW-9 | |
| **Matrix:** | Water | Water | Water | Water | |
| **Dilution Factor:** | 5 | 1 | 1 | 1 | MRL |
| **8260B+OXY+TPHG (EPA 8260B) (continued)** | | | | | |
| Styrene | <2.5 | <0.50 | <0.50 | <0.50 | 0.50 |
| 1,1,1,2-Tetrachloroethane | <2.5 | <0.50 | <0.50 | <0.50 | 0.50 |
| 1,1,2,2-Tetrachloroethane | <2.5 | <0.50 | <0.50 | <0.50 | 0.50 |
| Tetrachloroethylene (PCE) | **17** | **21** | **21** | **13** | 0.50 |
| Toluene | <2.5 | <0.50 | <0.50 | <0.50 | 0.50 |
| 1,2,3-Trichlorobenzene | <2.5 | <0.50 | <0.50 | <0.50 | 0.50 |
| 1,2,4-Trichlorobenzene | <2.5 | <0.50 | <0.50 | <0.50 | 0.50 |
| 1,1,1-Trichloroethane | <2.5 | <0.50 | <0.50 | <0.50 | 0.50 |
| 1,1,2-Trichloroethane | <2.5 | <0.50 | <0.50 | <0.50 | 0.50 |
| Trichloroethylene (TCE) | **560** | **500** | **650** | **380** | 0.50 |
| Trichlorofluoromethane (R11) | <2.5 | <0.50 | <0.50 | <0.50 | 0.50 |
| 1,2,3-Trichloropropane | <2.5 | <0.50 | <0.50 | <0.50 | 0.50 |
| 1,1,2-Trichloro-1,2,2-trifluoroethane (R113) | <2.5 | **0.66** | **0.74** | <0.50 | 0.50 |
| 1,3,5-Trimethylbenzene | <2.5 | <0.50 | <0.50 | <0.50 | 0.50 |
| 1,2,4-Trimethylbenzene | <2.5 | <0.50 | <0.50 | <0.50 | 0.50 |
| Vinyl chloride | <2.5 | <0.50 | <0.50 | <0.50 | 0.50 |
| o-Xylene | <2.5 | <0.50 | <0.50 | <0.50 | 0.50 |
| m,p-Xylenes | <5.0 | <1.0 | <1.0 | <1.0 | 1.0 |
| **Surrogates** | | | | | **%REC Limits** |
| 4-Bromofluorobenzene | 129% | 129% | 134% | 110% | 70-140 |
| Dibromofluoromethane | 102% | 84% | 80% | 82% | 70-140 |
| Toluene-d8 | 98% | 106% | 103% | 105% | 70-140 |

**Viorel Vasile**
Operations Manager

# LABORATORY ANALYSIS RESULTS

| | | | |
|---|---|---|---|
| **Client:** | Stantec (TO) | **AA Project No:** | A732179 |
| **Project No:** | 2057123300 | **Date Received:** | 05/03/16 |
| **Project Name:** | Grayson Power Plant Glendale Phase II | **Date Reported:** | 05/13/16 |
| **Method:** | VOCs, OXY & TPH Gasoline by GC/MS | **Units:** | ug/L |

| | | |
|---|---|---|
| **Date Sampled:** | 05/03/16 | |
| **Date Prepared:** | 05/10/16 | |
| **Date Analyzed:** | 05/10/16 | |
| **AA ID No:** | 6E03027-05 | |
| **Client ID No:** | Trip Blank | |
| **Matrix:** | Water | |
| **Dilution Factor:** | 1 | MRL |

**8260B+OXY+TPHG (EPA 8260B)**

| | | |
|---|---|---|
| Acetone | <10 | 10 |
| tert-Amyl Methyl Ether (TAME) | <2.0 | 2.0 |
| Benzene | <0.50 | 0.50 |
| Bromobenzene | <0.50 | 0.50 |
| Bromochloromethane | <0.50 | 0.50 |
| Bromodichloromethane | <0.50 | 0.50 |
| Bromoform | <0.50 | 0.50 |
| Bromomethane | <0.50 | 0.50 |
| 2-Butanone (MEK) | <10 | 10 |
| tert-Butyl alcohol (TBA) | <10 | 10 |
| sec-Butylbenzene | <0.50 | 0.50 |
| tert-Butylbenzene | <0.50 | 0.50 |
| n-Butylbenzene | <0.50 | 0.50 |
| Carbon Disulfide | <0.50 | 0.50 |
| Carbon Tetrachloride | <0.50 | 0.50 |
| Chlorobenzene | <0.50 | 0.50 |
| Chloroethane | <0.50 | 0.50 |
| Chloroform | <0.50 | 0.50 |
| Chloromethane | <0.50 | 0.50 |
| 2-Chlorotoluene | <0.50 | 0.50 |
| 4-Chlorotoluene | <0.50 | 0.50 |
| 1,2-Dibromo-3-chloropropane | <1.0 | 1.0 |
| Dibromochloromethane | <0.50 | 0.50 |
| 1,2-Dibromoethane (EDB) | <0.50 | 0.50 |
| Dibromomethane | <0.50 | 0.50 |
| 1,3-Dichlorobenzene | <0.50 | 0.50 |
| 1,2-Dichlorobenzene | <0.50 | 0.50 |

**Viorel Vasile**
Operations Manager

# LABORATORY ANALYSIS RESULTS

| | | | |
|---|---|---|---|
| **Client:** | Stantec (TO) | **AA Project No:** | A732179 |
| **Project No:** | 2057123300 | **Date Received:** | 05/03/16 |
| **Project Name:** | Grayson Power Plant Glendale Phase II | **Date Reported:** | 05/13/16 |
| **Method:** | VOCs, OXY & TPH Gasoline by GC/MS | **Units:** | ug/L |

| | | |
|---|---|---|
| **Date Sampled:** | 05/03/16 | |
| **Date Prepared:** | 05/10/16 | |
| **Date Analyzed:** | 05/10/16 | |
| **AA ID No:** | 6E03027-05 | |
| **Client ID No:** | Trip Blank | |
| **Matrix:** | Water | |
| **Dilution Factor:** | 1 | MRL |

**8260B+OXY+TPHG (EPA 8260B) (continued)**

| | | |
|---|---|---|
| 1,4-Dichlorobenzene | <0.50 | 0.50 |
| Dichlorodifluoromethane (R12) | <0.50 | 0.50 |
| 1,1-Dichloroethane | <0.50 | 0.50 |
| 1,2-Dichloroethane (EDC) | <0.50 | 0.50 |
| 1,1-Dichloroethylene | <0.50 | 0.50 |
| trans-1,2-Dichloroethylene | <0.50 | 0.50 |
| cis-1,2-Dichloroethylene | <0.50 | 0.50 |
| 1,2-Dichloropropane | <0.50 | 0.50 |
| 2,2-Dichloropropane | <0.50 | 0.50 |
| 1,3-Dichloropropane | <0.50 | 0.50 |
| cis-1,3-Dichloropropylene | <0.50 | 0.50 |
| trans-1,3-Dichloropropylene | <0.50 | 0.50 |
| 1,1-Dichloropropylene | <0.50 | 0.50 |
| Diisopropyl ether (DIPE) | <2.0 | 2.0 |
| Ethylbenzene | <0.50 | 0.50 |
| Ethyl-tert-Butyl Ether (ETBE) | <2.0 | 2.0 |
| Gasoline Range Organics (GRO) | <100 | 100 |
| Hexachlorobutadiene | <1.0 | 1.0 |
| 2-Hexanone (MBK) | <10 | 10 |
| Isopropylbenzene | <0.50 | 0.50 |
| 4-Isopropyltoluene | <1.0 | 1.0 |
| Methyl-tert-Butyl Ether (MTBE) | <2.0 | 2.0 |
| Methylene Chloride | <5.0 | 5.0 |
| 4-Methyl-2-pentanone (MIBK) | <10 | 10 |
| Naphthalene | <2.0 | 2.0 |
| n-Propylbenzene | <0.50 | 0.50 |

**Viorel Vasile**
Operations Manager

# LABORATORY ANALYSIS RESULTS

| | | | |
|---|---|---|---|
| **Client:** | Stantec (TO) | **AA Project No:** | A732179 |
| **Project No:** | 2057123300 | **Date Received:** | 05/03/16 |
| **Project Name:** | Grayson Power Plant Glendale Phase II | **Date Reported:** | 05/13/16 |
| **Method:** | VOCs, OXY & TPH Gasoline by GC/MS | **Units:** | ug/L |

| | | |
|---|---|---|
| **Date Sampled:** | 05/03/16 | |
| **Date Prepared:** | 05/10/16 | |
| **Date Analyzed:** | 05/10/16 | |
| **AA ID No:** | 6E03027-05 | |
| **Client ID No:** | Trip Blank | |
| **Matrix:** | Water | |
| **Dilution Factor:** | 1 | MRL |

**8260B+OXY+TPHG (EPA 8260B) (continued)**

| | | |
|---|---|---|
| Styrene | <0.50 | 0.50 |
| 1,1,1,2-Tetrachloroethane | <0.50 | 0.50 |
| 1,1,2,2-Tetrachloroethane | <0.50 | 0.50 |
| Tetrachloroethylene (PCE) | <0.50 | 0.50 |
| Toluene | <0.50 | 0.50 |
| 1,2,3-Trichlorobenzene | <0.50 | 0.50 |
| 1,2,4-Trichlorobenzene | <0.50 | 0.50 |
| 1,1,1-Trichloroethane | <0.50 | 0.50 |
| 1,1,2-Trichloroethane | <0.50 | 0.50 |
| Trichloroethylene (TCE) | <0.50 | 0.50 |
| Trichlorofluoromethane (R11) | <0.50 | 0.50 |
| 1,2,3-Trichloropropane | <0.50 | 0.50 |
| 1,1,2-Trichloro-1,2,2-trifluoroethane (R113) | <0.50 | 0.50 |
| 1,3,5-Trimethylbenzene | <0.50 | 0.50 |
| 1,2,4-Trimethylbenzene | <0.50 | 0.50 |
| Vinyl chloride | <0.50 | 0.50 |
| o-Xylene | <0.50 | 0.50 |
| m,p-Xylenes | <1.0 | 1.0 |

| **Surrogates** | | **%REC Limits** |
|---|---|---|
| 4-Bromofluorobenzene | 115% | 70-140 |
| Dibromofluoromethane | 85% | 70-140 |
| Toluene-d8 | 105% | 70-140 |

**Viorel Vasile**
Operations Manager

# LABORATORY ANALYSIS RESULTS

**Client:** Stantec (TO)
**Project No:** 2057123300
**Project Name:** Grayson Power Plant Glendale Phase II
**Method:** Carbon Chain by GC/FID

**AA Project No:** A732179
**Date Received:** 05/03/16
**Date Reported:** 05/13/16
**Units:** mg/L

| | | | | | |
|---|---|---|---|---|---|
| **Date Sampled:** | 05/03/16 | 05/03/16 | 05/03/16 | 05/03/16 | |
| **Date Prepared:** | 05/11/16 | 05/11/16 | 05/11/16 | 05/11/16 | |
| **Date Analyzed:** | 05/11/16 | 05/11/16 | 05/11/16 | 05/11/16 | |
| **AA ID No:** | 6E03027-01 | 6E03027-02 | 6E03027-03 | 6E03027-04 | |
| **Client ID No:** | MW-1 | MW-2 | B-7 | MW-9 | |
| **Matrix:** | Water | Water | Water | Water | |
| **Dilution Factor:** | 1 | 1 | 1 | 1 | MRL |
| **Carbon Chain Characterization 8015M (EPA 8015M)** | | | | | |
| C6-C8 | <0.010 | <0.010 | <0.010 | <0.010 | 0.010 |
| C8-C10 | <0.010 | <0.010 | <0.010 | <0.010 | 0.010 |
| C10-C12 | <0.010 | <0.010 | <0.010 | <0.010 | 0.010 |
| C12-C14 | <0.010 | <0.010 | **0.011** | **0.028** | 0.010 |
| C14-C16 | <0.010 | <0.010 | <0.010 | <0.010 | 0.010 |
| C16-C18 | <0.010 | <0.010 | <0.010 | <0.010 | 0.010 |
| C18-C20 | <0.010 | <0.010 | <0.010 | <0.010 | 0.010 |
| C20-C22 | <0.010 | <0.010 | <0.010 | <0.010 | 0.010 |
| C22-C24 | <0.010 | <0.010 | <0.010 | <0.010 | 0.010 |
| C24-C26 | <0.010 | **0.043** | <0.010 | <0.010 | 0.010 |
| C26-C28 | <0.010 | <0.010 | <0.010 | <0.010 | 0.010 |
| C28-C32 | <0.010 | <0.010 | <0.010 | <0.010 | 0.010 |
| C32-C34 | <0.010 | <0.010 | <0.010 | <0.010 | 0.010 |
| C34-C36 | <0.010 | <0.010 | <0.010 | <0.010 | 0.010 |
| C36-C40 | <0.010 | <0.010 | <0.010 | <0.010 | 0.010 |
| C40-C44 | <0.010 | <0.010 | <0.010 | <0.010 | 0.010 |
| TPH (C6-C44) | <0.10 | <0.10 | <0.10 | <0.10 | 0.10 |
| **Surrogates** | | | | | **%REC Limits** |
| o-Terphenyl | 88% | 117% | 105% | 89% | 50-150 |

**Viorel Vasile**
Operations Manager

# LABORATORY ANALYSIS RESULTS

**Client:** Stantec (TO)
**Project No:** 2057123300
**Project Name:** Grayson Power Plant Glendale Phase II
**Method:** Total Metals CAM 17

**AA Project No:** A732179
**Date Received:** 05/03/16
**Date Reported:** 05/13/16
**Units:** mg/L

| | | | | | |
|---|---|---|---|---|---|
| **Date Sampled:** | 05/03/16 | 05/03/16 | 05/03/16 | 05/03/16 | |
| **Date Prepared:** | 05/06/16 | 05/06/16 | 05/06/16 | 05/06/16 | |
| **Date Analyzed:** | 05/09/16 | 05/09/16 | 05/09/16 | 05/09/16 | |
| **AA ID No:** | 6E03027-01 | 6E03027-02 | 6E03027-03 | 6E03027-04 | |
| **Client ID No:** | MW-1 | MW-2 | B-7 | MW-9 | |
| **Matrix:** | Water | Water | Water | Water | |
| **Dilution Factor:** | 1 | 1 | 1 | 1 | MRL |
| **CAM Metals Less Hg 6000/7000 (EPA 6010B/7000)** | | | | | |
| Antimony | <0.20 | <0.20 | <0.20 | <0.20 | 0.20 |
| Arsenic | <0.0070 | **0.0070** | **0.0070** | **0.0080** | 0.0070 |
| Barium | <0.20 | <0.20 | <0.20 | **0.26** | 0.20 |
| Beryllium | <0.020 | <0.020 | <0.020 | <0.020 | 0.020 |
| Cadmium | <0.020 | <0.020 | <0.020 | <0.020 | 0.020 |
| Chromium | **0.064** | **0.085** | <0.050 | <0.050 | 0.050 |
| Cobalt | <0.050 | <0.050 | <0.050 | <0.050 | 0.050 |
| Copper | <0.050 | <0.050 | <0.050 | <0.050 | 0.050 |
| Lead | <0.0050 | <0.0050 | <0.0050 | <0.0050 | 0.0050 |
| Molybdenum | <0.050 | <0.050 | <0.050 | <0.050 | 0.050 |
| Nickel | <0.050 | <0.050 | <0.050 | <0.050 | 0.050 |
| Selenium | <0.0050 | <0.0050 | <0.0050 | <0.0050 | 0.0050 |
| Silver | <0.020 | <0.020 | <0.020 | <0.020 | 0.020 |
| Thallium | <0.10 | <0.10 | <0.10 | <0.10 | 0.10 |
| Vanadium | <0.20 | <0.20 | <0.20 | <0.20 | 0.20 |
| Zinc | <0.050 | <0.050 | <0.050 | <0.050 | 0.050 |

**Viorel Vasile**
Operations Manager

# LABORATORY ANALYSIS RESULTS

**Client:** Stantec (TO)
**Project No:** 2057123300
**Project Name:** Grayson Power Plant Glendale Phase II
**Method:** Total Metals CAM 17

**AA Project No:** A732179
**Date Received:** 05/03/16
**Date Reported:** 05/13/16
**Units:** mg/L

| | | | | | |
|---|---|---|---|---|---|
| **Date Sampled:** | 05/03/16 | 05/03/16 | 05/03/16 | 05/03/16 | |
| **Date Prepared:** | 05/11/16 | 05/11/16 | 05/11/16 | 05/11/16 | |
| **Date Analyzed:** | 05/11/16 | 05/11/16 | 05/11/16 | 05/11/16 | |
| **AA ID No:** | 6E03027-01 | 6E03027-02 | 6E03027-03 | 6E03027-04 | |
| **Client ID No:** | MW-1 | MW-2 | B-7 | MW-9 | |
| **Matrix:** | Water | Water | Water | Water | |
| **Dilution Factor:** | 1 | 1 | 1 | 1 | MRL |
| **Mercury Total EPA 7470A/7471A (EPA 7470A)** | | | | | |
| Mercury | <0.00050 | <0.00050 | <0.00050 | <0.00050 | 0.00050 |

**Viorel Vasile**
Operations Manager

# LABORATORY ANALYSIS RESULTS

**Client:** Stantec (TO)
**Project No:** 2057123300
**Project Name:** Grayson Power Plant Glendale Phase II

**AA Project No:** A732179
**Date Received:** 05/03/16
**Date Reported:** 05/13/16

| Analyte | Result | Reporting Limit | Units | Spike Level | Source Result | %REC | %REC Limits | RPD | RPD Limit | Notes |
|---|---|---|---|---|---|---|---|---|---|---|
| **Cations by Ion Chromatography - Quality Control** | | | | | | | | | | |
| *Batch B6E0336 - NO PREP* | | | | | | | | | | |
| **Blank (B6E0336-BLK1)** | | | | Prepared & Analyzed: 05/03/16 | | | | | | |
| Chromium (VI) | <0.30 | 0.30 | ug/L | | | | | | | |
| **LCS (B6E0336-BS1)** | | | | Prepared & Analyzed: 05/03/16 | | | | | | |
| Chromium (VI) | **2.04** | 0.30 | ug/L | 2.0 | | 102 | 80-120 | | 20 | |
| **LCS Dup (B6E0336-BSD1)** | | | | Prepared & Analyzed: 05/03/16 | | | | | | |
| Chromium (VI) | **2.24** | 0.30 | ug/L | 2.0 | | 112 | 80-120 | 9.25 | 20 | |
| **VOCs, OXY & TPH Gasoline by GC/MS - Quality Control** | | | | | | | | | | |
| *Batch B6E1022 - EPA 5030B* | | | | | | | | | | |
| **Blank (B6E1022-BLK1)** | | | | Prepared & Analyzed: 05/10/16 | | | | | | |
| Acetone | <10 | 10 | ug/L | | | | | | | |
| tert-Amyl Methyl Ether (TAME) | <2.0 | 2.0 | ug/L | | | | | | | |
| Benzene | <0.50 | 0.50 | ug/L | | | | | | | |
| Bromobenzene | <0.50 | 0.50 | ug/L | | | | | | | |
| Bromochloromethane | <0.50 | 0.50 | ug/L | | | | | | | |
| Bromodichloromethane | <0.50 | 0.50 | ug/L | | | | | | | |
| Bromoform | <0.50 | 0.50 | ug/L | | | | | | | |
| Bromomethane | <0.50 | 0.50 | ug/L | | | | | | | |
| 2-Butanone (MEK) | <10 | 10 | ug/L | | | | | | | |
| tert-Butyl alcohol (TBA) | <10 | 10 | ug/L | | | | | | | |
| sec-Butylbenzene | <0.50 | 0.50 | ug/L | | | | | | | |
| tert-Butylbenzene | <0.50 | 0.50 | ug/L | | | | | | | |
| n-Butylbenzene | <0.50 | 0.50 | ug/L | | | | | | | |
| Carbon Disulfide | <0.50 | 0.50 | ug/L | | | | | | | |
| Carbon Tetrachloride | <0.50 | 0.50 | ug/L | | | | | | | |
| Chlorobenzene | <0.50 | 0.50 | ug/L | | | | | | | |
| Chloroethane | <0.50 | 0.50 | ug/L | | | | | | | |
| Chloroform | <0.50 | 0.50 | ug/L | | | | | | | |
| Chloromethane | <0.50 | 0.50 | ug/L | | | | | | | |
| 2-Chlorotoluene | <0.50 | 0.50 | ug/L | | | | | | | |
| 4-Chlorotoluene | <0.50 | 0.50 | ug/L | | | | | | | |
| 1,2-Dibromo-3-chloropropane | <1.0 | 1.0 | ug/L | | | | | | | |

**Viorel Vasile**
Operations Manager

# LABORATORY ANALYSIS RESULTS

**Client:** Stantec (TO)
**Project No:** 2057123300
**Project Name:** Grayson Power Plant Glendale Phase II

**AA Project No:** A732179
**Date Received:** 05/03/16
**Date Reported:** 05/13/16

| Analyte | Result | Reporting Limit | Units | Spike Level | Source Result | %REC | %REC Limits | RPD | RPD Limit | Notes |
|---|---|---|---|---|---|---|---|---|---|---|
| **VOCs, OXY & TPH Gasoline by GC/MS - Quality Control** | | | | | | | | | | |
| *Batch B6E1022 - EPA 5030B* | | | | | | | | | | |
| **Blank (B6E1022-BLK1) Continued** | | | | Prepared & Analyzed: 05/10/16 | | | | | | |
| Dibromochloromethane | <0.50 | 0.50 | ug/L | | | | | | | |
| 1,2-Dibromoethane (EDB) | <0.50 | 0.50 | ug/L | | | | | | | |
| Dibromomethane | <0.50 | 0.50 | ug/L | | | | | | | |
| 1,3-Dichlorobenzene | <0.50 | 0.50 | ug/L | | | | | | | |
| 1,2-Dichlorobenzene | <0.50 | 0.50 | ug/L | | | | | | | |
| 1,4-Dichlorobenzene | <0.50 | 0.50 | ug/L | | | | | | | |
| Dichlorodifluoromethane (R12) | <0.50 | 0.50 | ug/L | | | | | | | |
| 1,1-Dichloroethane | <0.50 | 0.50 | ug/L | | | | | | | |
| 1,2-Dichloroethane (EDC) | <0.50 | 0.50 | ug/L | | | | | | | |
| 1,1-Dichloroethylene | <0.50 | 0.50 | ug/L | | | | | | | |
| trans-1,2-Dichloroethylene | <0.50 | 0.50 | ug/L | | | | | | | |
| cis-1,2-Dichloroethylene | <0.50 | 0.50 | ug/L | | | | | | | |
| 1,2-Dichloropropane | <0.50 | 0.50 | ug/L | | | | | | | |
| 2,2-Dichloropropane | <0.50 | 0.50 | ug/L | | | | | | | |
| 1,3-Dichloropropane | <0.50 | 0.50 | ug/L | | | | | | | |
| cis-1,3-Dichloropropylene | <0.50 | 0.50 | ug/L | | | | | | | |
| trans-1,3-Dichloropropylene | <0.50 | 0.50 | ug/L | | | | | | | |
| 1,1-Dichloropropylene | <0.50 | 0.50 | ug/L | | | | | | | |
| Diisopropyl ether (DIPE) | <2.0 | 2.0 | ug/L | | | | | | | |
| Ethylbenzene | <0.50 | 0.50 | ug/L | | | | | | | |
| Ethyl-tert-Butyl Ether (ETBE) | <2.0 | 2.0 | ug/L | | | | | | | |
| Gasoline Range Organics (GRO) | <100 | 100 | ug/L | | | | | | | |
| Hexachlorobutadiene | <1.0 | 1.0 | ug/L | | | | | | | |
| 2-Hexanone (MBK) | <10 | 10 | ug/L | | | | | | | |
| Isopropylbenzene | <0.50 | 0.50 | ug/L | | | | | | | |
| 4-Isopropyltoluene | <1.0 | 1.0 | ug/L | | | | | | | |
| Methyl-tert-Butyl Ether (MTBE) | <2.0 | 2.0 | ug/L | | | | | | | |
| Methylene Chloride | <5.0 | 5.0 | ug/L | | | | | | | |
| 4-Methyl-2-pentanone (MIBK) | <10 | 10 | ug/L | | | | | | | |
| Naphthalene | <2.0 | 2.0 | ug/L | | | | | | | |
| n-Propylbenzene | <0.50 | 0.50 | ug/L | | | | | | | |

**Viorel Vasile**
Operations Manager

# LABORATORY ANALYSIS RESULTS

**Client:** Stantec (TO)
**Project No:** 2057123300
**Project Name:** Grayson Power Plant Glendale Phase II

**AA Project No:** A732179
**Date Received:** 05/03/16
**Date Reported:** 05/13/16

| Analyte | Result | Reporting Limit | Units | Spike Level | Source Result | %REC | %REC Limits | RPD | RPD Limit | Notes |
|---|---|---|---|---|---|---|---|---|---|---|
| **VOCs, OXY & TPH Gasoline by GC/MS - Quality Control** | | | | | | | | | | |
| *Batch B6E1022 - EPA 5030B* | | | | | | | | | | |
| **Blank (B6E1022-BLK1) Continued** | | | | Prepared & Analyzed: 05/10/16 | | | | | | |
| Styrene | <0.50 | 0.50 | ug/L | | | | | | | |
| 1,1,1,2-Tetrachloroethane | <0.50 | 0.50 | ug/L | | | | | | | |
| 1,1,2,2-Tetrachloroethane | <0.50 | 0.50 | ug/L | | | | | | | |
| Tetrachloroethylene (PCE) | <0.50 | 0.50 | ug/L | | | | | | | |
| Toluene | <0.50 | 0.50 | ug/L | | | | | | | |
| 1,2,3-Trichlorobenzene | <0.50 | 0.50 | ug/L | | | | | | | |
| 1,2,4-Trichlorobenzene | <0.50 | 0.50 | ug/L | | | | | | | |
| 1,1,1-Trichloroethane | <0.50 | 0.50 | ug/L | | | | | | | |
| 1,1,2-Trichloroethane | <0.50 | 0.50 | ug/L | | | | | | | |
| Trichloroethylene (TCE) | <0.50 | 0.50 | ug/L | | | | | | | |
| Trichlorofluoromethane (R11) | <0.50 | 0.50 | ug/L | | | | | | | |
| 1,2,3-Trichloropropane | <0.50 | 0.50 | ug/L | | | | | | | |
| 1,1,2-Trichloro-1,2,2-trifluoroethane (R113) | <0.50 | 0.50 | ug/L | | | | | | | |
| 1,3,5-Trimethylbenzene | <0.50 | 0.50 | ug/L | | | | | | | |
| 1,2,4-Trimethylbenzene | <0.50 | 0.50 | ug/L | | | | | | | |
| Vinyl chloride | <0.50 | 0.50 | ug/L | | | | | | | |
| o-Xylene | <0.50 | 0.50 | ug/L | | | | | | | |
| m,p-Xylenes | <1.0 | 1.0 | ug/L | | | | | | | |
| *Surrogate: 4-Bromofluorobenzene* | *62.6* | | *ug/L* | *50* | | *125* | *70-140* | | | |
| *Surrogate: Dibromofluoromethane* | *42.5* | | *ug/L* | *50* | | *84.9* | *70-140* | | | |
| *Surrogate: Toluene-d8* | *53.3* | | *ug/L* | *50* | | *107* | *70-140* | | | |
| **LCS (B6E1022-BS1)** | | | | Prepared: 05/10/16 Analyzed: 05/11/16 | | | | | | |
| Acetone | **53.3** | 10 | ug/L | 50 | | 107 | 70-130 | | | |
| tert-Amyl Methyl Ether (TAME) | **21.5** | 2.0 | ug/L | 20 | | 108 | 70-130 | | | |
| Benzene | **21.6** | 0.50 | ug/L | 20 | | 108 | 75-125 | | | |
| Bromobenzene | **24.6** | 0.50 | ug/L | 20 | | 123 | 70-130 | | | |
| Bromochloromethane | **19.3** | 0.50 | ug/L | 20 | | 96.5 | 70-130 | | | |
| Bromodichloromethane | **22.6** | 0.50 | ug/L | 20 | | 113 | 75-125 | | | |
| Bromoform | **18.8** | 0.50 | ug/L | 20 | | 93.8 | 75-125 | | | |
| Bromomethane | **21.5** | 0.50 | ug/L | 20 | | 107 | 75-125 | | | |

**Viorel Vasile**
Operations Manager

# LABORATORY ANALYSIS RESULTS

**Client:** Stantec (TO)
**Project No:** 2057123300
**Project Name:** Grayson Power Plant Glendale Phase II

**AA Project No:** A732179
**Date Received:** 05/03/16
**Date Reported:** 05/13/16

| Analyte | Result | Reporting Limit | Units | Spike Level | Source Result | %REC | %REC Limits | RPD | RPD Limit | Notes |
|---|---|---|---|---|---|---|---|---|---|---|
| **VOCs, OXY & TPH Gasoline by GC/MS - Quality Control** | | | | | | | | | | |
| *Batch B6E1022 - EPA 5030B* | | | | | | | | | | |
| **LCS (B6E1022-BS1) Continued** | | | | Prepared: 05/10/16 Analyzed: 05/11/16 | | | | | | |
| 2-Butanone (MEK) | **52.1** | 10 | ug/L | 50 | | 104 | 70-130 | | | |
| tert-Butyl alcohol (TBA) | **112** | 10 | ug/L | 100 | | 112 | 70-130 | | | |
| sec-Butylbenzene | **23.6** | 0.50 | ug/L | 20 | | 118 | 70-130 | | | |
| tert-Butylbenzene | **22.4** | 0.50 | ug/L | 20 | | 112 | 70-130 | | | |
| n-Butylbenzene | **21.1** | 0.50 | ug/L | 20 | | 105 | 70-130 | | | |
| Carbon Disulfide | **38.8** | 0.50 | ug/L | 50 | | 77.6 | 70-130 | | | |
| Carbon Tetrachloride | **24.6** | 0.50 | ug/L | 20 | | 123 | 75-125 | | | |
| Chlorobenzene | **18.8** | 0.50 | ug/L | 20 | | 93.8 | 75-125 | | | |
| Chloroethane | **17.3** | 0.50 | ug/L | 20 | | 86.6 | 75-125 | | | |
| Chloroform | **18.4** | 0.50 | ug/L | 20 | | 92.0 | 75-125 | | | |
| Chloromethane | **20.1** | 0.50 | ug/L | 20 | | 101 | 65-125 | | | |
| 2-Chlorotoluene | **23.7** | 0.50 | ug/L | 20 | | 118 | 70-130 | | | |
| 4-Chlorotoluene | **21.3** | 0.50 | ug/L | 20 | | 106 | 70-130 | | | |
| 1,2-Dibromo-3-chloropropane | **19.2** | 1.0 | ug/L | 20 | | 95.9 | 70-130 | | | |
| Dibromochloromethane | **20.3** | 0.50 | ug/L | 20 | | 101 | 75-125 | | | |
| 1,2-Dibromoethane (EDB) | **18.9** | 0.50 | ug/L | 20 | | 94.4 | 70-130 | | | |
| Dibromomethane | **19.5** | 0.50 | ug/L | 20 | | 97.4 | 70-130 | | | |
| 1,3-Dichlorobenzene | **16.7** | 0.50 | ug/L | 20 | | 83.6 | 70-130 | | | |
| 1,2-Dichlorobenzene | **17.7** | 0.50 | ug/L | 20 | | 88.7 | 70-130 | | | |
| 1,4-Dichlorobenzene | **17.5** | 0.50 | ug/L | 20 | | 87.4 | 75-125 | | | |
| Dichlorodifluoromethane (R12) | **18.7** | 0.50 | ug/L | 20 | | 93.4 | 70-130 | | | |
| 1,1-Dichloroethane | **16.7** | 0.50 | ug/L | 20 | | 83.6 | 70-125 | | | |
| 1,2-Dichloroethane (EDC) | **20.7** | 0.50 | ug/L | 20 | | 104 | 75-125 | | | |
| 1,1-Dichloroethylene | **16.6** | 0.50 | ug/L | 20 | | 82.8 | 70-130 | | | |
| trans-1,2-Dichloroethylene | **17.9** | 0.50 | ug/L | 20 | | 89.7 | 75-125 | | | |
| cis-1,2-Dichloroethylene | **18.5** | 0.50 | ug/L | 20 | | 92.7 | 75-125 | | | |
| 1,2-Dichloropropane | **21.4** | 0.50 | ug/L | 20 | | 107 | 75-130 | | | |
| 2,2-Dichloropropane | **21.2** | 0.50 | ug/L | 20 | | 106 | 70-130 | | | |
| 1,3-Dichloropropane | **19.9** | 0.50 | ug/L | 20 | | 99.4 | 70-130 | | | |
| cis-1,3-Dichloropropylene | **18.3** | 0.50 | ug/L | 20 | | 91.5 | 75-125 | | | |
| trans-1,3-Dichloropropylene | **16.3** | 0.50 | ug/L | 20 | | 81.4 | 70-130 | | | |

**Viorel Vasile**
Operations Manager

# LABORATORY ANALYSIS RESULTS

**Client:** Stantec (TO)
**Project No:** 2057123300
**Project Name:** Grayson Power Plant Glendale Phase II

**AA Project No:** A732179
**Date Received:** 05/03/16
**Date Reported:** 05/13/16

| Analyte | Result | Reporting Limit | Units | Spike Level | Source Result | %REC | %REC Limits | RPD | RPD Limit | Notes |
|---|---|---|---|---|---|---|---|---|---|---|
| **VOCs, OXY & TPH Gasoline by GC/MS - Quality Control** | | | | | | | | | | |
| *Batch B6E1022 - EPA 5030B* | | | | | | | | | | |
| **LCS (B6E1022-BS1) Continued** | | | | Prepared: 05/10/16 Analyzed: 05/11/16 | | | | | | |
| 1,1-Dichloropropylene | **21.1** | 0.50 | ug/L | 20 | | 106 | 70-130 | | | |
| Diisopropyl ether (DIPE) | **20.4** | 2.0 | ug/L | 20 | | 102 | 70-130 | | | |
| Ethylbenzene | **20.2** | 0.50 | ug/L | 20 | | 101 | 75-125 | | | |
| Ethyl-tert-Butyl Ether (ETBE) | **21.2** | 2.0 | ug/L | 20 | | 106 | 70-130 | | | |
| Gasoline Range Organics (GRO) | **592** | 100 | ug/L | 500 | | 118 | 70-130 | | | |
| Hexachlorobutadiene | **20.6** | 1.0 | ug/L | 20 | | 103 | 70-130 | | | |
| 2-Hexanone (MBK) | **57.1** | 10 | ug/L | 50 | | 114 | 70-130 | | | |
| Isopropylbenzene | **24.3** | 0.50 | ug/L | 20 | | 121 | 70-130 | | | |
| 4-Isopropyltoluene | **22.4** | 1.0 | ug/L | 20 | | 112 | 70-130 | | | |
| Methyl-tert-Butyl Ether (MTBE) | **33.6** | 2.0 | ug/L | 40 | | 84.1 | 75-125 | | | |
| Methylene Chloride | **19.9** | 5.0 | ug/L | 20 | | 99.6 | 75-130 | | | |
| 4-Methyl-2-pentanone (MIBK) | **48.8** | 10 | ug/L | 50 | | 97.6 | 70-130 | | | |
| Naphthalene | **17.6** | 2.0 | ug/L | 20 | | 88.2 | 70-130 | | | |
| n-Propylbenzene | **23.4** | 0.50 | ug/L | 20 | | 117 | 70-130 | | | |
| Styrene | **18.0** | 0.50 | ug/L | 20 | | 90.1 | 70-130 | | | |
| 1,1,1,2-Tetrachloroethane | **20.4** | 0.50 | ug/L | 20 | | 102 | 70-130 | | | |
| 1,1,2,2-Tetrachloroethane | **16.2** | 0.50 | ug/L | 20 | | 80.9 | 70-135 | | | |
| Tetrachloroethylene (PCE) | **21.2** | 0.50 | ug/L | 20 | | 106 | 75-125 | | | |
| Toluene | **20.2** | 0.50 | ug/L | 20 | | 101 | 75-125 | | | |
| 1,2,3-Trichlorobenzene | **17.9** | 0.50 | ug/L | 20 | | 89.6 | 70-130 | | | |
| 1,2,4-Trichlorobenzene | **17.7** | 0.50 | ug/L | 20 | | 88.3 | 70-130 | | | |
| 1,1,1-Trichloroethane | **24.1** | 0.50 | ug/L | 20 | | 120 | 75-125 | | | |
| 1,1,2-Trichloroethane | **19.9** | 0.50 | ug/L | 20 | | 99.6 | 75-125 | | | |
| Trichloroethylene (TCE) | **22.6** | 0.50 | ug/L | 20 | | 113 | 75-125 | | | |
| Trichlorofluoromethane (R11) | **17.6** | 0.50 | ug/L | 20 | | 88.0 | 70-130 | | | |
| 1,2,3-Trichloropropane | **17.1** | 0.50 | ug/L | 20 | | 85.6 | 70-130 | | | |
| 1,1,2-Trichloro-1,2,2-trifluoroethane (R113) | **40.7** | 0.50 | ug/L | 40 | | 102 | 70-130 | | | |
| 1,3,5-Trimethylbenzene | **23.9** | 0.50 | ug/L | 20 | | 120 | 70-130 | | | |
| 1,2,4-Trimethylbenzene | **21.4** | 0.50 | ug/L | 20 | | 107 | 70-130 | | | |
| Vinyl chloride | **21.3** | 0.50 | ug/L | 20 | | 106 | 75-125 | | | |
| o-Xylene | **17.8** | 0.50 | ug/L | 20 | | 88.8 | 75-125 | | | |

**Viorel Vasile**
Operations Manager

# LABORATORY ANALYSIS RESULTS

**Client:** Stantec (TO)
**Project No:** 2057123300
**Project Name:** Grayson Power Plant Glendale Phase II

**AA Project No:** A732179
**Date Received:** 05/03/16
**Date Reported:** 05/13/16

| Analyte | Result | Reporting Limit | Units | Spike Level | Source Result | %REC | %REC Limits | RPD | RPD Limit | Notes |
|---|---|---|---|---|---|---|---|---|---|---|
| **VOCs, OXY & TPH Gasoline by GC/MS - Quality Control** | | | | | | | | | | |
| *Batch B6E1022 - EPA 5030B* | | | | | | | | | | |
| **LCS (B6E1022-BS1) Continued** | | | | Prepared: 05/10/16 Analyzed: 05/11/16 | | | | | | |
| m,p-Xylenes | **37.3** | 1.0 | ug/L | 40 | | 93.2 | 70-130 | | | |
| *Surrogate: 4-Bromofluorobenzene* | *63.8* | | *ug/L* | *50* | | *128* | *70-140* | | | |
| *Surrogate: Dibromofluoromethane* | *45.3* | | *ug/L* | *50* | | *90.7* | *70-140* | | | |
| *Surrogate: Toluene-d8* | *51.9* | | *ug/L* | *50* | | *104* | *70-140* | | | |
| **Matrix Spike (B6E1022-MS1)** | | **Source: 6D29003-01** | | Prepared & Analyzed: 05/10/16 | | | | | | |
| Acetone | **50.0** | 10 | ug/L | 50 | | 100 | 70-130 | | | |
| tert-Amyl Methyl Ether (TAME) | **24.6** | 2.0 | ug/L | 20 | | 123 | 70-130 | | | |
| Benzene | **19.3** | 0.50 | ug/L | 20 | | 96.3 | 70-130 | | | |
| Bromobenzene | **21.8** | 0.50 | ug/L | 20 | | 109 | 70-130 | | | |
| Bromochloromethane | **19.6** | 0.50 | ug/L | 20 | | 98.2 | 70-130 | | | |
| Bromodichloromethane | **20.2** | 0.50 | ug/L | 20 | | 101 | 70-130 | | | |
| Bromoform | **23.4** | 0.50 | ug/L | 20 | | 117 | 70-130 | | | |
| Bromomethane | **21.1** | 0.50 | ug/L | 20 | | 106 | 70-130 | | | |
| 2-Butanone (MEK) | **56.5** | 10 | ug/L | 50 | | 113 | 70-130 | | | |
| tert-Butyl alcohol (TBA) | **120** | 10 | ug/L | 100 | | 120 | 70-130 | | | |
| sec-Butylbenzene | **19.7** | 0.50 | ug/L | 20 | | 98.4 | 70-130 | | | |
| tert-Butylbenzene | **20.2** | 0.50 | ug/L | 20 | | 101 | 70-130 | | | |
| n-Butylbenzene | **19.5** | 0.50 | ug/L | 20 | | 97.6 | 70-130 | | | |
| Carbon Disulfide | **36.8** | 0.50 | ug/L | 50 | | 73.6 | 70-130 | | | |
| Carbon Tetrachloride | **19.6** | 0.50 | ug/L | 20 | | 98.0 | 70-130 | | | |
| Chlorobenzene | **19.3** | 0.50 | ug/L | 20 | | 96.6 | 70-130 | | | |
| Chloroethane | **17.2** | 0.50 | ug/L | 20 | | 85.8 | 70-130 | | | |
| Chloroform | **20.4** | 0.50 | ug/L | 20 | | 102 | 70-130 | | | |
| Chloromethane | **17.9** | 0.50 | ug/L | 20 | | 89.6 | 70-130 | | | |
| 2-Chlorotoluene | **19.4** | 0.50 | ug/L | 20 | | 96.8 | 70-130 | | | |
| 4-Chlorotoluene | **19.7** | 0.50 | ug/L | 20 | | 98.7 | 70-130 | | | |
| 1,2-Dibromo-3-chloropropane | **22.8** | 1.0 | ug/L | 20 | | 114 | 70-130 | | | |
| Dibromochloromethane | **23.6** | 0.50 | ug/L | 20 | | 118 | 70-130 | | | |
| 1,2-Dibromoethane (EDB) | **22.6** | 0.50 | ug/L | 20 | | 113 | 70-130 | | | |
| Dibromomethane | **20.2** | 0.50 | ug/L | 20 | | 101 | 70-130 | | | |
| 1,3-Dichlorobenzene | **18.9** | 0.50 | ug/L | 20 | | 94.7 | 70-130 | | | |

**Viorel Vasile**
Operations Manager

# LABORATORY ANALYSIS RESULTS

**Client:** Stantec (TO)
**Project No:** 2057123300
**Project Name:** Grayson Power Plant Glendale Phase II

**AA Project No:** A732179
**Date Received:** 05/03/16
**Date Reported:** 05/13/16

| Analyte | Result | Reporting Limit | Units | Spike Level | Source Result | %REC | %REC Limits | RPD | RPD Limit | Notes |
|---|---|---|---|---|---|---|---|---|---|---|
| **VOCs, OXY & TPH Gasoline by GC/MS - Quality Control** | | | | | | | | | | |
| *Batch B6E1022 - EPA 5030B* | | | | | | | | | | |
| **Matrix Spike (B6E1022-MS1) Continued Source: 6D29003-01** Prepared & Analyzed: 05/10/16 | | | | | | | | | | |
| 1,2-Dichlorobenzene | **19.4** | 0.50 | ug/L | 20 | | 97.0 | 70-130 | | | |
| 1,4-Dichlorobenzene | **20.3** | 0.50 | ug/L | 20 | | 102 | 70-130 | | | |
| Dichlorodifluoromethane (R12) | **17.6** | 0.50 | ug/L | 20 | | 88.2 | 70-130 | | | |
| 1,1-Dichloroethane | **18.5** | 0.50 | ug/L | 20 | | 92.7 | 70-130 | | | |
| 1,2-Dichloroethane (EDC) | **20.4** | 0.50 | ug/L | 20 | | 102 | 70-130 | | | |
| 1,1-Dichloroethylene | **17.2** | 0.50 | ug/L | 20 | | 86.0 | 70-130 | | | |
| trans-1,2-Dichloroethylene | **16.2** | 0.50 | ug/L | 20 | | 81.1 | 70-130 | | | |
| cis-1,2-Dichloroethylene | **17.0** | 0.50 | ug/L | 20 | | 84.8 | 70-130 | | | |
| 1,2-Dichloropropane | **20.8** | 0.50 | ug/L | 20 | | 104 | 70-130 | | | |
| 2,2-Dichloropropane | **18.3** | 0.50 | ug/L | 20 | | 91.4 | 70-130 | | | |
| 1,3-Dichloropropane | **24.2** | 0.50 | ug/L | 20 | | 121 | 70-130 | | | |
| cis-1,3-Dichloropropylene | **10.4** | 0.50 | ug/L | 20 | | 51.8 | 70-130 | | | QM-01 |
| trans-1,3-Dichloropropylene | **7.04** | 0.50 | ug/L | 20 | | 35.2 | 70-130 | | | QM-01 |
| 1,1-Dichloropropylene | **18.4** | 0.50 | ug/L | 20 | | 92.0 | 70-130 | | | |
| Diisopropyl ether (DIPE) | **22.9** | 2.0 | ug/L | 20 | | 115 | 70-130 | | | |
| Ethylbenzene | **20.3** | 0.50 | ug/L | 20 | | 101 | 70-130 | | | |
| Ethyl-tert-Butyl Ether (ETBE) | **25.1** | 2.0 | ug/L | 20 | | 125 | 70-130 | | | |
| Gasoline Range Organics (GRO) | **579** | 100 | ug/L | 500 | | 116 | 70-130 | | | |
| Hexachlorobutadiene | **20.9** | 1.0 | ug/L | 20 | | 105 | 70-130 | | | |
| 2-Hexanone (MBK) | **60.5** | 10 | ug/L | 50 | | 121 | 70-130 | | | |
| Isopropylbenzene | **20.9** | 0.50 | ug/L | 20 | | 104 | 70-130 | | | |
| 4-Isopropyltoluene | **20.1** | 1.0 | ug/L | 20 | | 101 | 70-130 | | | |
| Methyl-tert-Butyl Ether (MTBE) | **38.0** | 2.0 | ug/L | 40 | | 95.0 | 70-130 | | | |
| Methylene Chloride | **18.0** | 5.0 | ug/L | 20 | | 90.1 | 0-200 | | | |
| 4-Methyl-2-pentanone (MIBK) | **58.0** | 10 | ug/L | 50 | | 116 | 70-130 | | | |
| Naphthalene | **23.4** | 2.0 | ug/L | 20 | 0.980 | 112 | 70-130 | | | |
| n-Propylbenzene | **20.0** | 0.50 | ug/L | 20 | | 100 | 70-130 | | | |
| Styrene | **19.3** | 0.50 | ug/L | 20 | | 96.4 | 70-130 | | | |
| 1,1,1,2-Tetrachloroethane | **22.4** | 0.50 | ug/L | 20 | | 112 | 70-130 | | | |
| 1,1,2,2-Tetrachloroethane | **25.1** | 0.50 | ug/L | 20 | | 125 | 70-130 | | | |
| Tetrachloroethylene (PCE) | **21.4** | 0.50 | ug/L | 20 | | 107 | 70-130 | | | |

**Viorel Vasile**
Operations Manager

# LABORATORY ANALYSIS RESULTS

**Client:** Stantec (TO)
**Project No:** 2057123300
**Project Name:** Grayson Power Plant Glendale Phase II

**AA Project No:** A732179
**Date Received:** 05/03/16
**Date Reported:** 05/13/16

| Analyte | Result | Reporting Limit | Units | Spike Level | Source Result | %REC | %REC Limits | RPD | RPD Limit | Notes |
|---|---|---|---|---|---|---|---|---|---|---|
| **VOCs, OXY & TPH Gasoline by GC/MS - Quality Control** | | | | | | | | | | |
| *Batch B6E1022 - EPA 5030B* | | | | | | | | | | |
| **Matrix Spike (B6E1022-MS1) Continued Source: 6D29003-01** Prepared & Analyzed: 05/10/16 | | | | | | | | | | |
| Toluene | **19.9** | 0.50 | ug/L | 20 | | 99.4 | 70-130 | | | |
| 1,2,3-Trichlorobenzene | **21.8** | 0.50 | ug/L | 20 | | 109 | 70-130 | | | |
| 1,2,4-Trichlorobenzene | **20.5** | 0.50 | ug/L | 20 | | 103 | 70-130 | | | |
| 1,1,1-Trichloroethane | **19.0** | 0.50 | ug/L | 20 | | 95.2 | 70-130 | | | |
| 1,1,2-Trichloroethane | **24.3** | 0.50 | ug/L | 20 | | 122 | 70-130 | | | |
| Trichloroethylene (TCE) | **19.8** | 0.50 | ug/L | 20 | | 99.2 | 70-130 | | | |
| Trichlorofluoromethane (R11) | **16.4** | 0.50 | ug/L | 20 | | 82.2 | 70-130 | | | |
| 1,2,3-Trichloropropane | **24.4** | 0.50 | ug/L | 20 | | 122 | 70-130 | | | |
| 1,1,2-Trichloro-1,2,2-trifluoroethane (R113) | **33.0** | 0.50 | ug/L | 40 | | 82.6 | 70-130 | | | |
| 1,3,5-Trimethylbenzene | **20.9** | 0.50 | ug/L | 20 | | 104 | 70-130 | | | |
| 1,2,4-Trimethylbenzene | **19.6** | 0.50 | ug/L | 20 | 0.360 | 96.2 | 70-130 | | | |
| Vinyl chloride | **18.9** | 0.50 | ug/L | 20 | | 94.6 | 70-130 | | | |
| o-Xylene | **18.9** | 0.50 | ug/L | 20 | | 94.6 | 70-130 | | | |
| m,p-Xylenes | **38.5** | 1.0 | ug/L | 40 | | 96.4 | 70-130 | | | |
| *Surrogate: 4-Bromofluorobenzene* | *53.8* | | *ug/L* | *50* | | *108* | *70-140* | | | |
| *Surrogate: Dibromofluoromethane* | *44.5* | | *ug/L* | *50* | | *88.9* | *70-140* | | | |
| *Surrogate: Toluene-d8* | *51.5* | | *ug/L* | *50* | | *103* | *70-140* | | | |
| **Matrix Spike Dup (B6E1022-MSD1) Source: 6D29003-01** Prepared & Analyzed: 05/10/16 | | | | | | | | | | |
| Acetone | **52.0** | 10 | ug/L | 50 | | 104 | 70-130 | 4.02 | 30 | |
| tert-Amyl Methyl Ether (TAME) | **24.7** | 2.0 | ug/L | 20 | | 124 | 70-130 | 0.406 | 30 | |
| Benzene | **18.6** | 0.50 | ug/L | 20 | | 93.0 | 70-130 | 3.43 | 30 | |
| Bromobenzene | **21.6** | 0.50 | ug/L | 20 | | 108 | 70-130 | 0.738 | 30 | |
| Bromochloromethane | **18.0** | 0.50 | ug/L | 20 | | 89.8 | 70-130 | 9.04 | 30 | |
| Bromodichloromethane | **19.6** | 0.50 | ug/L | 20 | | 97.9 | 70-130 | 3.27 | 30 | |
| Bromoform | **23.0** | 0.50 | ug/L | 20 | | 115 | 70-130 | 1.64 | 30 | |
| Bromomethane | **20.3** | 0.50 | ug/L | 20 | | 101 | 70-130 | 4.01 | 30 | |
| 2-Butanone (MEK) | **57.7** | 10 | ug/L | 50 | | 115 | 70-130 | 2.05 | 30 | |
| tert-Butyl alcohol (TBA) | **119** | 10 | ug/L | 100 | | 119 | 70-130 | 0.509 | 30 | |
| sec-Butylbenzene | **19.5** | 0.50 | ug/L | 20 | | 97.7 | 70-130 | 0.765 | 30 | |
| tert-Butylbenzene | **20.3** | 0.50 | ug/L | 20 | | 101 | 70-130 | 0.198 | 30 | |

**Viorel Vasile**
Operations Manager

# LABORATORY ANALYSIS RESULTS

**Client:** Stantec (TO)
**Project No:** 2057123300
**Project Name:** Grayson Power Plant Glendale Phase II

**AA Project No:** A732179
**Date Received:** 05/03/16
**Date Reported:** 05/13/16

| Analyte | Result | Reporting Limit | Units | Spike Level | Source Result | %REC | %REC Limits | RPD | RPD Limit | Notes |
|---|---|---|---|---|---|---|---|---|---|---|
| **VOCs, OXY & TPH Gasoline by GC/MS - Quality Control** | | | | | | | | | | |
| *Batch B6E1022 - EPA 5030B* | | | | | | | | | | |
| **Matrix Spike Dup (B6E1022-MSD1) Continued** | | | | **Source: 6D29003-01** Prepared & Analyzed: 05/10/16 | | | | | | |
| n-Butylbenzene | **19.6** | 0.50 | ug/L | 20 | | 97.8 | 70-130 | 0.154 | 30 | |
| Carbon Disulfide | **37.5** | 0.50 | ug/L | 50 | | 75.1 | 70-130 | 1.94 | 30 | |
| Carbon Tetrachloride | **19.1** | 0.50 | ug/L | 20 | | 95.7 | 70-130 | 2.37 | 30 | |
| Chlorobenzene | **18.7** | 0.50 | ug/L | 20 | | 93.7 | 70-130 | 3.05 | 30 | |
| Chloroethane | **16.9** | 0.50 | ug/L | 20 | | 84.6 | 70-130 | 1.35 | 30 | |
| Chloroform | **18.9** | 0.50 | ug/L | 20 | | 94.6 | 70-130 | 7.72 | 30 | |
| Chloromethane | **17.4** | 0.50 | ug/L | 20 | | 86.8 | 70-130 | 3.12 | 30 | |
| 2-Chlorotoluene | **19.5** | 0.50 | ug/L | 20 | | 97.6 | 70-130 | 0.823 | 30 | |
| 4-Chlorotoluene | **20.6** | 0.50 | ug/L | 20 | | 103 | 70-130 | 4.46 | 30 | |
| 1,2-Dibromo-3-chloropropane | **21.9** | 1.0 | ug/L | 20 | | 109 | 70-130 | 4.25 | 30 | |
| Dibromochloromethane | **23.3** | 0.50 | ug/L | 20 | | 116 | 70-130 | 1.24 | 30 | |
| 1,2-Dibromoethane (EDB) | **23.0** | 0.50 | ug/L | 20 | | 115 | 70-130 | 1.49 | 30 | |
| Dibromomethane | **19.1** | 0.50 | ug/L | 20 | | 95.3 | 70-130 | 5.86 | 30 | |
| 1,3-Dichlorobenzene | **19.4** | 0.50 | ug/L | 20 | | 97.2 | 70-130 | 2.55 | 30 | |
| 1,2-Dichlorobenzene | **19.5** | 0.50 | ug/L | 20 | | 97.3 | 70-130 | 0.360 | 30 | |
| 1,4-Dichlorobenzene | **20.6** | 0.50 | ug/L | 20 | | 103 | 70-130 | 1.32 | 30 | |
| Dichlorodifluoromethane (R12) | **16.1** | 0.50 | ug/L | 20 | | 80.6 | 70-130 | 9.00 | 30 | |
| 1,1-Dichloroethane | **17.2** | 0.50 | ug/L | 20 | | 85.8 | 70-130 | 7.73 | 30 | |
| 1,2-Dichloroethane (EDC) | **19.0** | 0.50 | ug/L | 20 | | 94.8 | 70-130 | 7.46 | 30 | |
| 1,1-Dichloroethylene | **16.9** | 0.50 | ug/L | 20 | | 84.5 | 70-130 | 1.76 | 30 | |
| trans-1,2-Dichloroethylene | **16.1** | 0.50 | ug/L | 20 | | 80.5 | 70-130 | 0.743 | 30 | |
| cis-1,2-Dichloroethylene | **17.0** | 0.50 | ug/L | 20 | | 85.2 | 70-130 | 0.412 | 30 | |
| 1,2-Dichloropropane | **20.0** | 0.50 | ug/L | 20 | | 100 | 70-130 | 3.77 | 30 | |
| 2,2-Dichloropropane | **17.5** | 0.50 | ug/L | 20 | | 87.4 | 70-130 | 4.53 | 30 | |
| 1,3-Dichloropropane | **23.5** | 0.50 | ug/L | 20 | | 118 | 70-130 | 2.98 | 30 | |
| cis-1,3-Dichloropropylene | **10.6** | 0.50 | ug/L | 20 | | 53.0 | 70-130 | 2.38 | 30 | QM-01 |
| trans-1,3-Dichloropropylene | **7.03** | 0.50 | ug/L | 20 | | 35.2 | 70-130 | 0.142 | 30 | QM-01 |
| 1,1-Dichloropropylene | **17.5** | 0.50 | ug/L | 20 | | 87.5 | 70-130 | 5.07 | 30 | |
| Diisopropyl ether (DIPE) | **22.2** | 2.0 | ug/L | 20 | | 111 | 70-130 | 3.05 | 30 | |
| Ethylbenzene | **19.7** | 0.50 | ug/L | 20 | | 98.3 | 70-130 | 3.06 | 30 | |
| Ethyl-tert-Butyl Ether (ETBE) | **24.3** | 2.0 | ug/L | 20 | | 122 | 70-130 | 3.08 | 30 | |

**Viorel Vasile**
Operations Manager

# LABORATORY ANALYSIS RESULTS

**Client:** Stantec (TO)
**Project No:** 2057123300
**Project Name:** Grayson Power Plant Glendale Phase II

**AA Project No:** A732179
**Date Received:** 05/03/16
**Date Reported:** 05/13/16

| Analyte | Result | Reporting Limit | Units | Spike Level | Source Result | %REC | %REC Limits | RPD | RPD Limit | Notes |
|---|---|---|---|---|---|---|---|---|---|---|
| **VOCs, OXY & TPH Gasoline by GC/MS - Quality Control** | | | | | | | | | | |
| *Batch B6E1022 - EPA 5030B* | | | | | | | | | | |
| **Matrix Spike Dup (B6E1022-MSD1) Continued** | | | | **Source: 6D29003-01** Prepared & Analyzed: 05/10/16 | | | | | | |
| Gasoline Range Organics (GRO) | **504** | 100 | ug/L | 500 | | 101 | 70-130 | 13.9 | 30 | |
| Hexachlorobutadiene | **21.4** | 1.0 | ug/L | 20 | | 107 | 70-130 | 2.22 | 30 | |
| 2-Hexanone (MBK) | **58.8** | 10 | ug/L | 50 | | 118 | 70-130 | 2.82 | 30 | |
| Isopropylbenzene | **21.2** | 0.50 | ug/L | 20 | | 106 | 70-130 | 1.28 | 30 | |
| 4-Isopropyltoluene | **20.1** | 1.0 | ug/L | 20 | | 101 | 70-130 | 0.0993 | 30 | |
| Methyl-tert-Butyl Ether (MTBE) | **36.6** | 2.0 | ug/L | 40 | | 91.6 | 70-130 | 3.70 | 30 | |
| Methylene Chloride | **17.1** | 5.0 | ug/L | 20 | | 85.3 | 0-200 | 5.47 | 200 | |
| 4-Methyl-2-pentanone (MIBK) | **57.4** | 10 | ug/L | 50 | | 115 | 70-130 | 1.11 | 30 | |
| Naphthalene | **23.1** | 2.0 | ug/L | 20 | 0.980 | 111 | 70-130 | 0.989 | 30 | |
| n-Propylbenzene | **19.9** | 0.50 | ug/L | 20 | | 99.4 | 70-130 | 0.902 | 30 | |
| Styrene | **18.4** | 0.50 | ug/L | 20 | | 92.2 | 70-130 | 4.51 | 30 | |
| 1,1,1,2-Tetrachloroethane | **22.1** | 0.50 | ug/L | 20 | | 110 | 70-130 | 1.30 | 30 | |
| 1,1,2,2-Tetrachloroethane | **24.0** | 0.50 | ug/L | 20 | | 120 | 70-130 | 4.11 | 30 | |
| Tetrachloroethylene (PCE) | **20.5** | 0.50 | ug/L | 20 | | 103 | 70-130 | 4.06 | 30 | |
| Toluene | **19.4** | 0.50 | ug/L | 20 | | 97.2 | 70-130 | 2.19 | 30 | |
| 1,2,3-Trichlorobenzene | **23.6** | 0.50 | ug/L | 20 | | 118 | 70-130 | 8.06 | 30 | |
| 1,2,4-Trichlorobenzene | **21.0** | 0.50 | ug/L | 20 | | 105 | 70-130 | 2.07 | 30 | |
| 1,1,1-Trichloroethane | **18.3** | 0.50 | ug/L | 20 | | 91.4 | 70-130 | 4.07 | 30 | |
| 1,1,2-Trichloroethane | **23.5** | 0.50 | ug/L | 20 | | 117 | 70-130 | 3.52 | 30 | |
| Trichloroethylene (TCE) | **18.6** | 0.50 | ug/L | 20 | | 92.9 | 70-130 | 6.51 | 30 | |
| Trichlorofluoromethane (R11) | **16.1** | 0.50 | ug/L | 20 | | 80.3 | 70-130 | 2.40 | 30 | |
| 1,2,3-Trichloropropane | **23.4** | 0.50 | ug/L | 20 | | 117 | 70-130 | 4.26 | 30 | |
| 1,1,2-Trichloro-1,2,2-trifluoroethane (R113) | **33.1** | 0.50 | ug/L | 40 | | 82.8 | 70-130 | 0.181 | 30 | |
| 1,3,5-Trimethylbenzene | **20.9** | 0.50 | ug/L | 20 | | 104 | 70-130 | 0.144 | 30 | |
| 1,2,4-Trimethylbenzene | **19.7** | 0.50 | ug/L | 20 | 0.360 | 96.6 | 70-130 | 0.305 | 30 | |
| Vinyl chloride | **17.3** | 0.50 | ug/L | 20 | | 86.3 | 70-130 | 9.23 | 30 | |
| o-Xylene | **18.1** | 0.50 | ug/L | 20 | | 90.6 | 70-130 | 4.32 | 30 | |
| m,p-Xylenes | **37.0** | 1.0 | ug/L | 40 | | 92.6 | 70-130 | 4.02 | 30 | |
| *Surrogate: 4-Bromofluorobenzene* | *55.1* | | *ug/L* | *50* | | *110* | *70-140* | | | |

**Viorel Vasile**
Operations Manager

# LABORATORY ANALYSIS RESULTS

**Client:** Stantec (TO)
**Project No:** 2057123300
**Project Name:** Grayson Power Plant Glendale Phase II

**AA Project No:** A732179
**Date Received:** 05/03/16
**Date Reported:** 05/13/16

| Analyte | Result | Reporting Limit | Units | Spike Level | Source Result | %REC | %REC Limits | RPD | RPD Limit | Notes |
|---|---|---|---|---|---|---|---|---|---|---|
| **VOCs, OXY & TPH Gasoline by GC/MS - Quality Control** | | | | | | | | | | |
| *Batch B6E1022 - EPA 5030B* | | | | | | | | | | |
| **Matrix Spike Dup (B6E1022-MSD1) Continued** | | | **Source: 6D29003-01** | Prepared & Analyzed: 05/10/16 | | | | | | |
| *Surrogate: Dibromofluoromethane* | *43.1* | | *ug/L* | *50* | | *86.2* | *70-140* | | | |
| *Surrogate: Toluene-d8* | *52.0* | | *ug/L* | *50* | | *104* | *70-140* | | | |
| **Carbon Chain by GC/FID - Quality Control** | | | | | | | | | | |
| *Batch B6E1107 - EPA 3510C* | | | | | | | | | | |
| **Blank (B6E1107-BLK1)** | | | | Prepared & Analyzed: 05/11/16 | | | | | | |
| C6-C8 | <0.010 | 0.010 | mg/L | | | | | | | |
| C8-C10 | <0.010 | 0.010 | mg/L | | | | | | | |
| C10-C12 | <0.010 | 0.010 | mg/L | | | | | | | |
| C12-C14 | <0.010 | 0.010 | mg/L | | | | | | | |
| C14-C16 | <0.010 | 0.010 | mg/L | | | | | | | |
| C16-C18 | <0.010 | 0.010 | mg/L | | | | | | | |
| C18-C20 | <0.010 | 0.010 | mg/L | | | | | | | |
| C20-C22 | <0.010 | 0.010 | mg/L | | | | | | | |
| C22-C24 | <0.010 | 0.010 | mg/L | | | | | | | |
| C24-C26 | <0.010 | 0.010 | mg/L | | | | | | | |
| C26-C28 | <0.010 | 0.010 | mg/L | | | | | | | |
| C28-C32 | <0.010 | 0.010 | mg/L | | | | | | | |
| C32-C34 | <0.010 | 0.010 | mg/L | | | | | | | |
| C34-C36 | <0.010 | 0.010 | mg/L | | | | | | | |
| C36-C40 | <0.010 | 0.010 | mg/L | | | | | | | |
| C40-C44 | <0.010 | 0.010 | mg/L | | | | | | | |
| TPH (C6-C44) | <0.10 | 0.10 | mg/L | | | | | | | |
| *Surrogate: o-Terphenyl* | *0.0474* | | *mg/L* | *0.040* | | *119* | *50-150* | | | |
| **LCS (B6E1107-BS1)** | | | | Prepared & Analyzed: 05/11/16 | | | | | | |
| Diesel Range Organics as Diesel | **0.730** | 0.10 | mg/L | 0.80 | | 91.2 | 75-125 | | | |
| *Surrogate: o-Terphenyl* | *0.0488* | | *mg/L* | *0.040* | | *122* | *50-150* | | | |
| **LCS Dup (B6E1107-BSD1)** | | | | Prepared & Analyzed: 05/11/16 | | | | | | |
| Diesel Range Organics as Diesel | **0.728** | 0.10 | mg/L | 0.80 | | 90.9 | 75-125 | 0.261 | 30 | |
| *Surrogate: o-Terphenyl* | *0.0534* | | *mg/L* | *0.040* | | *133* | *50-150* | | | |

**Viorel Vasile**
Operations Manager

# LABORATORY ANALYSIS RESULTS

**Client:** Stantec (TO)
**Project No:** 2057123300
**Project Name:** Grayson Power Plant Glendale Phase II

**AA Project No:** A732179
**Date Received:** 05/03/16
**Date Reported:** 05/13/16

| Analyte | Result | Reporting Limit | Units | Spike Level | Source Result | %REC | %REC Limits | RPD | RPD Limit | Notes |
|---|---|---|---|---|---|---|---|---|---|---|
| **Total Metals CAM 17 - Quality Control** | | | | | | | | | | |
| *Batch B6E0606 - EPA 3010A* | | | | | | | | | | |
| **Blank (B6E0606-BLK1)** | | | | Prepared: 05/06/16 Analyzed: 05/09/16 | | | | | | |
| Antimony | <0.20 | 0.20 | mg/L | | | | | | | |
| Arsenic | <0.0070 | 0.0070 | mg/L | | | | | | | |
| Barium | <0.20 | 0.20 | mg/L | | | | | | | |
| Beryllium | <0.020 | 0.020 | mg/L | | | | | | | |
| Cadmium | <0.020 | 0.020 | mg/L | | | | | | | |
| Chromium | <0.050 | 0.050 | mg/L | | | | | | | |
| Cobalt | <0.050 | 0.050 | mg/L | | | | | | | |
| Copper | <0.050 | 0.050 | mg/L | | | | | | | |
| Lead | <0.0050 | 0.0050 | mg/L | | | | | | | |
| Molybdenum | <0.050 | 0.050 | mg/L | | | | | | | |
| Nickel | <0.050 | 0.050 | mg/L | | | | | | | |
| Selenium | <0.0050 | 0.0050 | mg/L | | | | | | | |
| Silver | <0.020 | 0.020 | mg/L | | | | | | | |
| Thallium | <0.10 | 0.10 | mg/L | | | | | | | |
| Vanadium | <0.20 | 0.20 | mg/L | | | | | | | |
| Zinc | <0.050 | 0.050 | mg/L | | | | | | | |
| **LCS (B6E0606-BS1)** | | | | Prepared: 05/06/16 Analyzed: 05/09/16 | | | | | | |
| Antimony | **0.169** | 0.20 | mg/L | 0.20 | | 84.6 | 80-120 | | | |
| Arsenic | **0.175** | 0.0070 | mg/L | 0.20 | | 87.4 | 80-120 | | | |
| Barium | **0.187** | 0.20 | mg/L | 0.20 | | 93.6 | 80-120 | | | |
| Beryllium | **0.178** | 0.020 | mg/L | 0.20 | | 89.2 | 80-120 | | | |
| Cadmium | **0.179** | 0.020 | mg/L | 0.20 | | 89.6 | 80-120 | | | |
| Chromium | **0.178** | 0.050 | mg/L | 0.20 | | 89.2 | 80-120 | | | |
| Cobalt | **0.178** | 0.050 | mg/L | 0.20 | | 88.8 | 80-120 | | | |
| Copper | **0.180** | 0.050 | mg/L | 0.20 | | 89.9 | 80-120 | | | |
| Lead | **0.176** | 0.0050 | mg/L | 0.20 | | 88.2 | 80-120 | | | |
| Molybdenum | **0.178** | 0.050 | mg/L | 0.20 | | 89.2 | 80-120 | | | |
| Nickel | **0.178** | 0.050 | mg/L | 0.20 | | 88.8 | 80-120 | | | |
| Selenium | **0.182** | 0.0050 | mg/L | 0.20 | | 91.0 | 80-120 | | | |
| Silver | **0.186** | 0.020 | mg/L | 0.20 | | 93.2 | 80-120 | | | |
| Thallium | **0.173** | 0.10 | mg/L | 0.20 | | 86.6 | 80-120 | | | |

**Viorel Vasile**
Operations Manager

# LABORATORY ANALYSIS RESULTS

**Client:** Stantec (TO)
**Project No:** 2057123300
**Project Name:** Grayson Power Plant Glendale Phase II

**AA Project No:** A732179
**Date Received:** 05/03/16
**Date Reported:** 05/13/16

| Analyte | Result | Reporting Limit | Units | Spike Level | Source Result | %REC | %REC Limits | RPD | RPD Limit | Notes |
|---|---|---|---|---|---|---|---|---|---|---|
| **Total Metals CAM 17 - Quality Control** | | | | | | | | | | |
| *Batch B6E0606 - EPA 3010A* | | | | | | | | | | |
| **LCS (B6E0606-BS1) Continued** | | | | Prepared: 05/06/16 | | Analyzed: 05/09/16 | | | | |
| Vanadium | **0.176** | 0.20 | mg/L | 0.20 | | 87.9 | 80-120 | | | |
| Zinc | **0.182** | 0.050 | mg/L | 0.20 | | 90.8 | 80-120 | | | |
| **LCS Dup (B6E0606-BSD1)** | | | | Prepared: 05/06/16 | | Analyzed: 05/09/16 | | | | |
| Antimony | **0.188** | 0.20 | mg/L | 0.20 | | 94.2 | 80-120 | 10.6 | 20 | |
| Arsenic | **0.192** | 0.0070 | mg/L | 0.20 | | 96.2 | 80-120 | 9.59 | 20 | |
| Barium | **0.196** | 0.20 | mg/L | 0.20 | | 98.1 | 80-120 | 4.64 | 20 | |
| Beryllium | **0.198** | 0.020 | mg/L | 0.20 | | 99.2 | 80-120 | 10.7 | 20 | |
| Cadmium | **0.197** | 0.020 | mg/L | 0.20 | | 98.6 | 80-120 | 9.51 | 20 | |
| Chromium | **0.197** | 0.050 | mg/L | 0.20 | | 98.6 | 80-120 | 10.0 | 20 | |
| Cobalt | **0.197** | 0.050 | mg/L | 0.20 | | 98.3 | 80-120 | 10.2 | 20 | |
| Copper | **0.198** | 0.050 | mg/L | 0.20 | | 99.2 | 80-120 | 9.79 | 20 | |
| Lead | **0.196** | 0.0050 | mg/L | 0.20 | | 97.9 | 80-120 | 10.4 | 20 | |
| Molybdenum | **0.194** | 0.050 | mg/L | 0.20 | | 96.9 | 80-120 | 8.33 | 20 | |
| Nickel | **0.199** | 0.050 | mg/L | 0.20 | | 99.5 | 80-120 | 11.4 | 20 | |
| Selenium | **0.204** | 0.0050 | mg/L | 0.20 | | 102 | 80-120 | 11.5 | 20 | |
| Silver | **0.194** | 0.020 | mg/L | 0.20 | | 96.8 | 80-120 | 3.68 | 20 | |
| Thallium | **0.204** | 0.10 | mg/L | 0.20 | | 102 | 80-120 | 16.5 | 20 | |
| Vanadium | **0.194** | 0.20 | mg/L | 0.20 | | 97.2 | 80-120 | 10.0 | 20 | |
| Zinc | **0.199** | 0.050 | mg/L | 0.20 | | 99.6 | 80-120 | 9.35 | 20 | |
| **Matrix Spike (B6E0606-MS1)** | | **Source: 6E03027-02** | | Prepared: 05/06/16 | | Analyzed: 05/09/16 | | | | |
| Antimony | **0.190** | 0.20 | mg/L | 0.20 | <0.20 | 94.8 | 75-125 | | | |
| Arsenic | **0.191** | 0.0070 | mg/L | 0.20 | 0.00700 | 91.8 | 75-125 | | | |
| Barium | **0.268** | 0.20 | mg/L | 0.20 | 0.0800 | 94.1 | 75-125 | | | |
| Beryllium | **0.188** | 0.020 | mg/L | 0.20 | <0.020 | 93.8 | 75-125 | | | |
| Cadmium | **0.185** | 0.020 | mg/L | 0.20 | <0.020 | 92.3 | 75-125 | | | |
| Chromium | **0.268** | 0.050 | mg/L | 0.20 | 0.0850 | 91.5 | 75-125 | | | |
| Cobalt | **0.184** | 0.050 | mg/L | 0.20 | <0.050 | 91.8 | 75-125 | | | |
| Copper | **0.201** | 0.050 | mg/L | 0.20 | <0.050 | 101 | 75-125 | | | |
| Lead | **0.228** | 0.0050 | mg/L | 0.20 | <0.0050 | 114 | 75-125 | | | |
| Molybdenum | **0.192** | 0.050 | mg/L | 0.20 | <0.050 | 95.8 | 75-125 | | | |
| Nickel | **0.182** | 0.050 | mg/L | 0.20 | <0.050 | 90.9 | 75-125 | | | |

**Viorel Vasile**
Operations Manager

# LABORATORY ANALYSIS RESULTS

**Client:** Stantec (TO)
**Project No:** 2057123300
**Project Name:** Grayson Power Plant Glendale Phase II

**AA Project No:** A732179
**Date Received:** 05/03/16
**Date Reported:** 05/13/16

| Analyte | Result | Reporting Limit | Units | Spike Level | Source Result | %REC | %REC Limits | RPD | RPD Limit | Notes |
|---|---|---|---|---|---|---|---|---|---|---|
| **Total Metals CAM 17 - Quality Control** | | | | | | | | | | |
| *Batch B6E0606 - EPA 3010A* | | | | | | | | | | |
| **Matrix Spike (B6E0606-MS1) Continued Source: 6E03027-02** Prepared: 05/06/16 Analyzed: 05/09/16 | | | | | | | | | | |
| Selenium | **0.204** | 0.0050 | mg/L | 0.20 | <0.0050 | 102 | 75-125 | | | |
| Silver | **0.192** | 0.020 | mg/L | 0.20 | <0.020 | 96.1 | 75-125 | | | |
| Thallium | **0.226** | 0.10 | mg/L | 0.20 | <0.10 | 113 | 75-125 | | | |
| Vanadium | **0.194** | 0.20 | mg/L | 0.20 | <0.20 | 97.2 | 75-125 | | | |
| Zinc | **0.228** | 0.050 | mg/L | 0.20 | <0.050 | 114 | 75-125 | | | |
| **Matrix Spike Dup (B6E0606-MSD1) Source: 6E03027-02** Prepared: 05/06/16 Analyzed: 05/09/16 | | | | | | | | | | |
| Antimony | **0.198** | 0.20 | mg/L | 0.20 | <0.20 | 99.2 | 75-125 | 4.54 | 20 | |
| Arsenic | **0.198** | 0.0070 | mg/L | 0.20 | 0.00700 | 95.7 | 75-125 | 4.01 | 20 | |
| Barium | **0.285** | 0.20 | mg/L | 0.20 | 0.0800 | 102 | 75-125 | 5.93 | 20 | |
| Beryllium | **0.201** | 0.020 | mg/L | 0.20 | <0.020 | 100 | 75-125 | 6.95 | 20 | |
| Cadmium | **0.196** | 0.020 | mg/L | 0.20 | <0.020 | 98.2 | 75-125 | 6.19 | 20 | |
| Chromium | **0.286** | 0.050 | mg/L | 0.20 | 0.0850 | 101 | 75-125 | 6.57 | 20 | |
| Cobalt | **0.195** | 0.050 | mg/L | 0.20 | <0.050 | 97.7 | 75-125 | 6.17 | 20 | |
| Copper | **0.215** | 0.050 | mg/L | 0.20 | <0.050 | 108 | 75-125 | 6.53 | 20 | |
| Lead | **0.209** | 0.0050 | mg/L | 0.20 | <0.0050 | 105 | 75-125 | 8.42 | 20 | |
| Molybdenum | **0.208** | 0.050 | mg/L | 0.20 | <0.050 | 104 | 75-125 | 7.96 | 20 | |
| Nickel | **0.190** | 0.050 | mg/L | 0.20 | <0.050 | 94.8 | 75-125 | 4.25 | 20 | |
| Selenium | **0.218** | 0.0050 | mg/L | 0.20 | <0.0050 | 109 | 75-125 | 6.82 | 20 | |
| Silver | **0.205** | 0.020 | mg/L | 0.20 | <0.020 | 102 | 75-125 | 6.25 | 20 | |
| Thallium | **0.242** | 0.10 | mg/L | 0.20 | <0.10 | 121 | 75-125 | 7.01 | 20 | |
| Vanadium | **0.206** | 0.20 | mg/L | 0.20 | <0.20 | 103 | 75-125 | 5.85 | 20 | |
| Zinc | **0.242** | 0.050 | mg/L | 0.20 | <0.050 | 121 | 75-125 | 6.13 | 20 | |
| **Total Metals CAM 17 - Quality Control** | | | | | | | | | | |
| *Batch B6E1111 - EPA 7470A Prep* | | | | | | | | | | |
| **Blank (B6E1111-BLK1)** Prepared & Analyzed: 05/11/16 | | | | | | | | | | |
| Mercury | <0.00050 | 0.00050 | mg/L | | | | | | | |
| **LCS (B6E1111-BS1)** Prepared & Analyzed: 05/11/16 | | | | | | | | | | |
| Mercury | **0.0109** | 0.00050 | mg/L | 0.010 | | 109 | 80-120 | | | |
| **LCS Dup (B6E1111-BSD1)** Prepared & Analyzed: 05/11/16 | | | | | | | | | | |
| Mercury | **0.0108** | 0.00050 | mg/L | 0.010 | | 108 | 80-120 | 1.25 | 20 | |

**Viorel Vasile**
Operations Manager

# LABORATORY ANALYSIS RESULTS

**Client:** Stantec (TO)
**Project No:** 2057123300
**Project Name:** Grayson Power Plant Glendale Phase II

**AA Project No:** A732179
**Date Received:** 05/03/16
**Date Reported:** 05/13/16

| Analyte | Result | Reporting Limit | Units | Spike Level | Source Result | %REC | %REC Limits | RPD | RPD Limit | Notes |
|---|---|---|---|---|---|---|---|---|---|---|
| **Total Metals CAM 17 - Quality Control** | | | | | | | | | | |
| *Batch B6E1111 - EPA 7470A Prep* | | | | | | | | | | |
| **Matrix Spike (B6E1111-MS1)** | | **Source: 6E03027-01** | | Prepared & Analyzed: 05/11/16 | | | | | | |
| Mercury | **0.0102** | 0.00050 | mg/L | 0.010 | 0.00050 | 102 | 75-125 | | | |
| **Matrix Spike Dup (B6E1111-MSD1)** | | **Source: 6E03027-01** | | Prepared & Analyzed: 05/11/16 | | | | | | |
| Mercury | **0.0106** | 0.00050 | mg/L | 0.010 | 0.00050 | 106 | 75-125 | 3.47 | 20 | |

**Viorel Vasile**
Operations Manager

# LABORATORY ANALYSIS RESULTS

| | | | |
|---|---|---|---|
| **Client:** | Stantec (TO) | **AA Project No:** | A732179 |
| **Project No:** | 2057123300 | **Date Received:** | 05/03/16 |
| **Project Name:** | Grayson Power Plant Glendale Phase II | **Date Reported:** | 05/13/16 |

**Special Notes**

**[1] = AA-C1** : The reported concentration is mainly from the contribution of chlorinated compounds present in the sample

**[2] = D-35** : Sample does not display a fuel pattern. Sample contains several discrete peaks.

**[3] = QM-01** : The spike recovery for this QC sample is outside of established control limits due to sample matrix interference.

Gasoline Range Organics (GRO) concentration represents the C4-C12 carbon range.

**Viorel Vasile**
Operations Manager

125036

Stantec

# CHAIN OF CUSTODY FORM

25864-I Business Center Dr., Redlands, CA 92374 (909)335 6116, Fax (909) 335-6120

A732179/6E03027



Client Name/Address:
Stantec
25864-I Business Center Drive
Redlands, CA 92374

Project/PO Number: 205712330 0

Laboratory: American Analytics

Project Manager: Carl Hasse
Email Address: Carl.Hasse@Stantec.com

Phone Number: 909-335-6116

Fax Number: 909 335 6120

Sampler: J. Sargent Joshua.Sargent@Stantec.com

Analysis Required

| Sample Description | Sample Matrix | Container Type | # of Cont. | Sampling Date | Sampling Time | Preservatives | TPH 8015 | VOC 8260 | CAM 17 Metals 6010 | Cr(VI) 7199 | | | | | Special Instructions |
|---|---|---|---|---|---|---|---|---|---|---|---|---|---|---|---|
| MW-1 | W | Varies | 6 | 5.3.16 | 1003 | Varies | X | X | X | X | | | | | 6E03027-01 |
| MW-2 | W | ↓ | 6 | ↓ | 0852 | ↓ | X | X | X | X | | | | | -02 |
| ~~MW-8~~ B-7 | W | ↓ | 6 | ↓ | 1049 | ↓ | X | X | X | X | | | | | -03 |
| MW-9 | W | ↓ | 6 | ↓ | 1154 | ↓ | X | X | X | X | | | | | -04 |
| Trip Blank | W | VOA | 2 | NA | NA | HCL | | X | | | | | | | -05 |

PRIORITY

| Relinquished By: | Date/Time: | Received By: | Date/Time: |
|---|---|---|---|
| [signature] | 5.3.16 1215 | [signature] | 5/3/16 1215 |
| [signature] | 5/3/16 1259 | [signature] | 5/3/16 1251 |
| | | | |

Turn Around Time: Same day, 24 hour, 48 hour, 72 hours, 5 days, normal

Sample Integrity: (Check) Intact X on ice X

**Note:** By relinquishing samples, client agrees to pay for the services requested on this chain of custody form and any additional analyses performed on this project. Payment for services is due within 30 days from the date of invoice. Sample(s) will be disposed of after 30 days.

# Appendix D

# HERO VAPOR INTRUSION MODEL CALCULATIONS

# DTSC Vapor Intrusion Screening Model - Soil Gas

## Introduction

This vapor intrusion model should be used in conjunction with the 2011 Department of Toxic Substances Control (DTSC) document: "Guidance for the Evaluation and Mitigation of Subsurface Vapor Intrusion into Indoor Air", also called the Vapor Intrusion Guidance (VIG).

The Johnson and Ettinger (J&E) model (1991) predicts indoor air concentrations resulting from subsurface vapor migration into indoor air. The model produces an attenuation factor "alpha" that represents the ratio of the indoor air concentration to the subsurface concentration. Indoor air concentrations can be estimated from subsurface data (contaminant concentration in soil gas or groundwater) and the attenuation factor. The USEPA programmed the J&E model into Microsoft EXCEL™ and added a human health risk component that calculates the risk associated with inhalation of a specific contaminant at the estimated indoor air concentration (USEPA Vapor Intrusion Model; 2004a). The USEPA "User's Guide for Evaluating Subsurface Vapor Intrusion into Buildings" (2004b) should be reviewed for documentation and instructions for using the vapor intrusion model provided in the spreadsheets. The USEPA screening level model can be used an additional line of evidence for evaluating vapor intrusion at a site. The model has been modified by the DTSC Human and Ecological Risk Office (HERO) to include Cal/EPA toxicity criteria values for the risk calculation component.

After preliminary evaluation of a site for potential vapor intrusion by use of default vapor attenuation factors (DTSC VIG, Step 5), a site-specific screening evaluation may be conducted using physical parameter data collected for the site and the DTSC version of the USEPA Vapor Intrusion Model (DTSC VIG, Steps 6 and 7). Table 3 of the DTSC VIG lists the input parameters for Site-Specific Screening Evaluations and provides default values for several parameters.

Users of the spreadsheet should be familiar with the assumptions and limitations of the model and recognize when the model is not appropriate for evaluating a site. For example, the model cannot evaluate preferential migration pathways and fractured bedrock conditions, which have the potential to significantly increase the rate of vapor intrusion beyond what the model would predict. Input parameters for a given site must be appropriately conservative and match site-specific conditions. The user should understand the sensitivity of the model to various input parameters and the DTSC recommends that all vapor intrusion evaluations include a sensitivity analysis. (See DTSC 2011 and USEPA 2004b).

## December 2014 Revisions

The residential exposure duration (ED) and the averaging time for noncarcinogens ($AT_{NC}$) have been changed to 26 years as recommended by DTSC Human and Ecological Risk Office (DTSC 2014a) and consistent with the USEPA Exposure Factors Update (USEPA 2014a). **(DATENTER F47, G47; VLOOKUP C19, D19)**

## March 2014 Revisions (last update - December 2011)

The DTSC version of the USEPA vapor intrusion spreadsheet model has been revised to (1) reflect recommendations in the Final DTSC Vapor Intrusion Guidance (2011), (2) provide additional receptor exposure scenarios, and (3) update toxicity criteria values from Cal/EPA Office of Environmental Health Hazard Assessment (OEHHA) and USEPA as currently recommended by the DTSC Human and Ecological Risk Office. Other revisions include changes in default soil properties and values for chemical physical properties, addition of references and comments for specific toxicity criteria, and messages and flags to refer the user to additional information.

**Soil Properties (DATENTER H24, F36:H36)**

The default values for soil properties for screening evaluations have been revised to those for sand (SCS soil type "S"; previous values were from USEPA Soil Screening Guidance, 1996), and are consistent with the values used to derive the California Human Health Screening Levels (OEHHA, 2005). Site-specific values may be used for site-specific vapor intrusion evaluations (see Appendices D and H of the VIG).

**Additional Receptors (DATENTER Row 47)**

A pull-down menu has been provided to allow for evaluation of a commercial/industrial receptor or a user-defined receptor, in addition to the residential receptor.

**Receptor Exposure Parameters (DATENTER Row 47)**

The auto-fill feature (using the "Lookup Receptor Parameters" button) will provide default exposure assumptions and air exchange rate for the residential and commercial scenarios. The user can also enter site-specific expsoure parameters if the "user-defined" scenario is selected.

**Exposure Time (DATENTER I47)**

Exposure Time was added as a parameter for receptor inhalation exposures. This revision is consistent with USEPA (2009) methodology to use the type of human health toxicity values which are currently derived by the USEPA Integrated Risk Information System (IRIS) as concentrations (Reference Concentrations, [or Cal/EPA OEHHA References Exposure Levels] for non-cancer effects and Inhalation Unit Risk values for cancer endpoints) rather than the earlier and now superseded intake-based approach. This revision is also needed for evaluation of receptor daily exposures that are less than 24 hours.

# DTSC Vapor Intrusion Screening Model - Soil Gas

**Air Exchange Rate (DATENTER J47)**

The Air Exchange Rate was added as an input parameter specific to a receptor scenario—residential (default = 0.5 changes per hour), commercial (default = 1.0 changes per hour), or user-defined. A user-defined site-specific air exchange rate may be higher or lower than the default. However, the exchange rate must be within a reasonable range and the basis for the value must be technically supported. The building dimensions remain fixed for the screening scenarios (INTERCALCS I10).

**Default Attenuation Factor (alpha) for Subslab Soil Gas Data (DATENTER E24, F24, J36, J37; INTERCALCS A10, H31; message at RESULTS B19 and DATENTER K9)**

For soil gas, the "source - building separation", $L_T$, is calculated by the model as the difference between the depth below grade to the bottom of the enclosed space, $L_F$ (E24), and the soil gas sampling depth below grade, $L_S$ (F24) (ideally, the depth to the source): $L_T = L_S - L_F$

If $L_T$, is less than 40 cm (OEHHA 2005; engineered fill scenario), the model defaults to the empirically derived subslab attenuation factor of 0.05 (DTSC VIG Table 2 and Appendix B):

If $L_T < 40$ cm, alpha = 0.05

**Minimum Attenuation Factor (DATENTER L7; INTERCALCS H31; message at INTERCALCS H32, RESULTS B19 and DATENTER K9)**

In certain site-specific situations, the model can yield very low attenuation factors, lower than reasonable values. DTSC does not anticipate that many sites will have attenuation factors less than 0.00006 (6E-05) for soil gas, as indicated by the empirical data in USEPA's database (5th percentile of attenuation factors remaining after source strength screen of 500X for exterior soil gas; USEPA, 2012). A warning message will appear on the INTERCALCS, RESULTS and DATENTER worksheets if the calculated attenuation factor is less than 0.00006. Use of attenuation factors less than 0.00006 should be fully explained and justified with site-specific information and a weight-of-evidence approach.

**Results Summary (DATENTER J4:N7)**

The receptor scenario, soil gas concentration (source vapor concentration, $C_{source}$), attenuation factor (alpha), indoor air concentration ($C_{building}$), cancer risk and hazard quotient are now shown on the DATENTER worksheet for easy reference and printing. For the soil gas model, $C_{source}$ is the measured soil gas concentration input into the model. For the groundwater model, $C_{source}$ is calculated from the groundwater concentration input into the model.

**Chemical Properties (VLOOKUP, Chemical Properties Lookup Table)**

The Chemical Properties Lookup Table columns C through H represent the current DTSC/HERO recommendations. These values reflect the chemical properties listed in the USEPA November 2013 Regional Screening Level Tables (USEPA 2013a) and USEPA online Vapor Intrusion Screening Level Calculator (2014b), except for the chemicals listed below:

75296 **2-Chloropropane** - Not listed in the RSL table; original spreadsheet values are retained.
108872 **Methylcyclohexane** - Not listed in the RSL table; original spreadsheet values are retained.
541731 **1,3-Dichlorobenzene** - Not listed in the RSL table; average values for 1,2- and 1,4-isomers from the RSL table are used as surrogate.

**Toxicity Criteria (VLOOKUP, Chemical Properties Lookup Table)**

The toxicity criteria listed in the Chemical Properties Lookup Table columns M (Inhalation Unit Risk, IUR) and N (Reference Concentration, RfC), represent current DTSC/HERO recommendations. These values are used by the model for calculating risk and hazard. The toxicity criteria listed in columns S (IUR) and T (RfC) are from the USEPA November 2013 Regional Screening Level Tables. For screening evaluations, DTSC/HERO applies route-extrapolation of oral toxicity values when inhalation criteria are not available. The RSL table excludes inhalation critiera derived by route-extrapolation from oral toxicity values. Many of the RfCs previously based on route-extrapolation have been replaced by USEPA provisional RfC or screening RfCs. Toxicity criteria from the original USEPA version of the model are shown as "Archive" values in columns W and X. Chemicals for which toxicity criteria values in columns M and N have been revised are listed below. See cell notes in VLOOKUP for further information.

**OEHHA** = Cal/EPA Office of Environmental Health Hazard Assessment
**IRIS** = USEPA Integrated Risk Information System
**RSL** = USEPA Regional Screening Level (Tables and Chemical-Specific values)
**PPRTV** = USEPA Provisional Peer-Reviewed Toxicity Value (PPRTV also refers to the USEPA document)
**IUR** = Inhalation Unit Risk
**REL** = Reference Exposure Level (Cal/EPA OEHHA inhalation reference concentration)
**RfC** = Reference Concentration
**RfDi** = Inhalation Reference Dose
**RfDo** = Oral Reference Dose
**ATSDR** = Agency for Toxic Substances and Disease Registry
**MRL** = ATSDR Minimal Risk Level

67663 **Chloroform** - IUR was revised to USEPA IRIS value. RfC was revised to ATSDR value as recommended in November 2013 RSL table.

67721 **Hexachloroethane** - RfC updated to 2011 USEPA RfC.

71432 **Benzene** - RfC from USEPA 2003 IRIS replaced with OEHHA 2014 REL

71556 **1,1,1-Trichloroethane** - RfC replaced with OEHHA REL.

74873 **Methyl Chloride** (Chloromethane) - IUR value withdrawn; USEPA 2012 PPRTV determined data are inadequate for assessment of carcinogenic potential.

74908 **Hydrogen Cyanide** - RfC updated to 2010 IRIS RfC.

74953 **Methylene Bromide** (Dibromomethane) - RfC derived from RfDo replaced with USEPA 2009 PPRTV Appendix A screening chronic RfC.

75003 **Chloroethane** - IUR value withdrawn by USEPA. 2007 PPRTV characterized chloroethane as likely to be carcinogenic to humans; however, data are inadequate for calculation of inhalation unit risk. Listed in 1990 as Cal/EPA Prop. 65 carcinogen.

75718 **Dichlorodifluoromethane** - RfC updated with 2010 PPRTV Appendix A screening chronic RfC.

79005 **1,1,2-Trichloroethane** - RfC derived from RfDo replaced with 2011 PPRTV Appendix A screening chronic RfC.

79345 **1,1,2,2-Tetrachloroethane** - RfC derived from PPRTV RfDo was updated using route-to-route extrapolation of 2010 IRIS RfDo.

88722 **o-Nitrotoluene** - Added IUR derived from route extrapolation of USEPA 2008 PPRTV oral cancer slope factor. USEPA classified as likely to be carcinogenic to humans. Listed in 1998 as Cal/EPA Prop. 65 carcinogen.

92524 **Biphenyl** - RfC derived from RfDo replaced with USEPA 2011 PPRTV Appendix A screening chronic RfC. Suggestive evidence of carcinogenicity.

96333 **Methyl Acrylate** - RfC derived from RfDo replaced with 2012 PPRTV RfC recommended in the November 2013 RSL Table.

97632 **Ethylmethylacrylate** - RfC derived from RfDo replaced with 2010 PPRTV RfC recommended in the November 2013 RSL Table.

98066 ***tert*-Butylbenzene** - RfC derived from RfDo replaced with IRIS RfC for isopropylbenzene (cumene), surrogate recommended by 2012 PPRTV for tert-butylbenzene.

98953 **Nitrobenzene** - IUR added and RfC updated with the 2009 IRIS assessment. Likely to be carcinogenic to humans (combined route).

103651 **n-Propylbenzene** - RfC derived from RfDo replaced with IRIS RfC for ethyl benzene, surrogate recommended in 2009 PPRTV Appendix A and used in November 2013 RSL table.

104518 **n-Butylbenzene** - RfC derived from provisional RfDo updated using route-to-route extrapolation of 2010 IRIS RfDo.

106934 **1,2-Dibromoethane** - IUR from OEHHA replaced with more conservative IRIS IUR.

107062 **1,2-Dichloroethane** - IUR from OEHHA replaced with IRIS IUR. RfC (OEHHA 2000 REL) updated with USEPA 2010 PPRTV RfC.

108678 **1,3,5-Trimethylbenzene** - RfC derived as 2003 PPRTV was withdrawn by USEPA; replaced with RfC HERO derived by route extrapolation of 2009 PPRTV screening chronic RfDo.

108872 **Methylcyclohexane** - RfC from HEAST replaced with IRIS 2005 RfC for surrogate hexane.

108907 **Chlorobenzene** - RfC from OEHHA (REL) replaced with USEPA 2006 PPRTV RfC.

120821 **1,2,4-Trichlorobenzene** - RfC from 2002 PPRTV updated with USEPA 2009 PPRTV RfC.

126987 **Methacrylonitrile** - RfC from HEAST updated with USEPA 2013 PPRTV RfC.

126998 **2-Chloro-1,3-butadiene** (Chloroprene) - IUR added and RfC from HEAST updated with IRIS RfC. USEPA 2010 IRIS assessment characterized chloroprene as likely to be carcinogenic to humans. Listed in 2000 as Cal/EPA Prop. 65 carcinogen.

132649 **Dibenzofuran** - RfC derived from provisional RfDo replaced with RfC derived from route-extrapolation of USEPA 2007 PPRTV screening chronic RfDo.

135988 ***sec*-Butylbenzene** - RfC replaced with IRIS RfC for isopropylbenzene, surrogate recommended by 2012 PPRTV for sec-butylbenzene.

141786 **Ethylacetate** - RfC derived from 1988 IRIS RfDo replaced by USEPA 2013 PPRTV RfC.

156592 ***cis*-1,2-Dichloroethylene** - RfC derived from HEAST RfDo replaced with RfC derived from extrapolation of the 2010 IRIS RfDo.

319846 **alpha-HCH** (Hexachlorohexane; alpha-BHC) - IUR from OEHHA replaced with more conservative USEPA IRIS IUR.

**Additional Chemicals (VLOOKUP, Chemical Properties Lookup Table)**

Chemicals have been added to the list for vapor intrusion evaluation as a result of toxicity criteria being derived or revised, more frequent detection at sites, and/or as needed for specific sites. See cell notes in VLOOKUP for chemical-specific information.

109-99-9 **Tetrahydrofuran**
96-12-8 **1,2-Dibromo-3-chloropropane**
142-28-9 **1,3-Dichloropropane**
123-91-1 **1,4-Dioxane**
108-60-1 **bis(2-Chloroisopropyl)ether**
542-88-1 **bis(Chloromethyl)ether**
108-20-3 **Diisopropyl ether (DIPE)**
106-89-8 **Epichlorohydrin**
924-16-3 **N-Nitroso-di-n-butylamine**
109-66-0 **Pentane, n-**
110-82-7 **Cyclohexane**

**Chemical-Specific Information - Message (DATENTER I13)**

For certain chemicals, a message will appear beneath the chemical name referring the user to the VLOOKUP Chemical Properties Lookup Table for comments on chemical properties and/or toxicity criteria. The comments provide chemical-specific information important for interpretation and/or application of the results in risk characterization and risk management. Included are possible or likely carcinogens for which inhalation unit risks have not been developed for quantifying potential risks.

**Trichloroethylene (Trichloroethene, TCE; VLOOKUP, Chemical Properties Lookup Table M70, N70; message at DATENTER I13)**

To protect women in the first trimester of pregnancy as one of the most sensitive populations, due to potential developmental toxicity from exposure to TCE, USEPA Region 9 developed health-protective interim response action levels and guidelines to address short-term inhalation exposures to TCE in indoor air from subsurface vapor intrusion (USEPA 2013b). HERO concurs with use of the USEPA Region 9's "Prompt Response Action Levels" of 2 $\mu g/m^3$ and 9 $\mu g/m^3$ for exposure to TCE under residential and commercial/industrial 8-hour workday scenarios, respectively (DTSC 2014b).

In the event the model-predicted indoor air concentration of TCE for a site approaches or exceeds these interim action levels, the DTSC Project Manager and Toxicologist should be contacted for a site-specific evaluation.

(Note that these prompt response action levels are close to the long-term exposure, cancer risk-based indoor air concentrations for $10^{-6}$ risk, 0.4 $\mu g/m^3$ for residential exposures and 3 $\mu g/m^3$ for 8-hour/day commercial/industrial exposures.)

## References

DTSC, 2011. *Guidance for the Evaluation and Mitigation of Subsurface Vapor Intrusion into Indoor Air*. Department of Toxic Substances Control, California Environmental Protection Agency. October 2011.
http://www.dtsc.ca.gov/AssessingRisk/upload/Final_VIG_Oct_2011.pdf

DTSC, 2014a. *Human Health Risk Assessment Note Number 1 - Recommended DTSC Default Exposure Factors for Use in Risk Assessment at California Hazardous Waste Sites and Permitted Facilities.* Human and Ecological Risk Office, Department of Toxic Substances Control, California Environmental Protection Agency. September 30, 2014.
http://www.dtsc.ca.gov/AssessingRisk/upload/HHRA_Note1-2.pdf

DTSC, 2014b. *Human Health Risk Assessment Note Number 5 - Health-based Indoor Air Screening Criteria for Trichloroethylene (TCE)*. Human and Ecological Risk Office, Department of Toxic Substances Control, California Environmental Protection Agency. August 23, 2014.
http://www.dtsc.ca.gov/AssessingRisk/upload/HHRA_Note5-pdf-pdf.pdf

Johnson, P. and Ettinger, R., 1991. *Heuristic Model for Predicting the Intrusion Rate of Contaminant Vapors into Buildings*. Environmental Science and Technology, 25:1445-1452.

OEHHA, 2005. *Human-Exposure-Based Screening Numbers Developed to Aid Estimation of Cleanup Costs for Contaminated Soil.* Office of Environmental Health Hazard Assessment, California Environmental Protection Agency. January 2005
http://www.oehha.ca.gov/risk/pdf/screenreport010405.pdf

OEHHA, 2011. *Air Toxics Hot Spots, Risk Assessment Guidelines: Technical Support Document for Cancer Potency Factors.* Air Toxicology and Epidemiology Branch, Office of Environmental Health Hazard Assessment, California Environmental Protection Agency. June 2011 update of May 2009 Document, and online updates as of January 2014.
http://www.oehha.ca.gov/air/hot_spots/tsd052909.html

OEHHA, 2013. *Air Toxics Hot Spots, Risk Assessment Guidelines: Technical Support Document for the Derivation of Noncancer Reference Exposure Levels.* Air Toxicology and Epidemiology Branch, Office of Environmental Health Hazard Assessment, California Environmental Protection Agency. August, 2013 update of June 2008 Document, and online updates as of January 2014.
http://www.oehha.ca.gov/air/hot_spots/rels_dec2008.html

OEHHA, 2014. *OEHHA Toxicity Criteria Database*. Online database, Office of Environmental Health Hazard Assessment, California Environmental Protection Agency. 2014.
http://www.oehha.ca.gov/tcdb/index.asp

USEPA, 1996. *Soil Screening Guidance: User's Guide.* United States Environmental Protection Agency, Office of Emergency and Remedial Response. July 1996. EPA/540/R96/018, 9355.4-23.
http://www.epa.gov/superfund/health/conmedia/soil/index.htm#user)

USEPA, 2002. *Draft Guidance for Evaluating the Vapor Intrusion to Indoor Air Pathway from Groundwater and Soils (Subsurface Vapor Intrusion Guidance).* United States Environmental Protection Agency, Office of Solid Waste and Emergency Response. November 2002. EPA530-D-02-004.
http://www.epa.gov/epawaste/hazard/correctiveaction/eis/vapor.htm

USEPA, 2004a. Johnson and Ettinger (1991) Model for Subsurface Vapor Intrusion into Buildings. 3-Phase System Models and Soil Gas Models. Version 3.1. United States Environmental Protection Agency, Office of Emergency and Remedial Response. February 2004.
http://www.epa.gov/oswer/riskassessment/airmodel/johnson_ettinger.htm

USEPA, 2004b. *User's Guide for Evaluating Subsurface Vapor Intrusion into Buildings.* United States Environmental Protection Agency, Office of Emergency and Remedial Response. February 22, 2004.
http://www.epa.gov/oswer/riskassessment/airmodel/pdf/2004_0222_3phase_users_guide.pdf

USEPA, 2009. *Risk Assessment for Guidance for Superfund Volume I Human Health Evaluation Manual (Part F, Supplemental Guidance for Inhalation Risk Assessment).* Office of Superfund Remediation and Technology Innovation, United States Environmental Protection Agency. January 2009. EPA-540-R-070-002, OSWER 9285.7-82.
http://www.epa.gov/oswer/riskassessment/ragsf/index.htm

USEPA, 2012. *EPA's Vapor Intrusion Database: Evaluation and Characterization of Attenuation Factors for Chlorinated Volatile Organic Compounds and Residential Buildings.* United States Environmental Protection Agency, Office of Solid Waste and Emergency Response. March 16, 2012. EPA 530-R-10-002.
http://www.epa.gov/oswer/vaporintrusion/documents/OSWER_2010_Database_Report_03-16-2012_Final_witherratum_508.pdf

USEPA, 2013a. *Regional Screening Levels for Chemical Contaminants at Superfund Sites* (website and Tables). United States Environmental Protection Agency, Office of Solid Waste and Emergency Response, Mid-Atlantic Region. November 2013.
http://www.epa.gov/reg3hwmd/risk/human/rb-concentration_table/index.htm

USEPA, 2013b. *USEPA Region 9 Guidelines and Supplemental Information Needed for Vapor Intrusion Evaluations at the South Bay National Priorities List (NPL) Sites*. Letter from Kathleen Salyer, Assistant Director, Superfund Division, California Cleanup Branch, USEPA Region 9, San Francisco, to Stephen Hill, Chief, Toxics Cleanup Division, California Regional Water Quality Control Board – San Francisco Bay Region. December 3, 2013.
http://yosemite.epa.gov/r9/sfund/r9sfdocw.nsf/3dc283e6c5d6056f88257426007417a2/b563f292da63ca2c88257c380075fab5/$file/68800995.pdf/epa%20region%209%20south%20bay%20vi%20letter%2012-3-13.pdf

USEPA, 2014a. *Human Health Evaluation Manual, Supplemental Guidance: Update of Standard Default Exposure Factors,* United States Environmental Protection Agency, Office of Solid Waste and Emergency Response, Office of Superfund Remediation and Technology Innovation. OSWER 9200.1-120. February 6, 2014.
http://www.epa.gov/oswer/riskassessment/pdf/superfund-hh-exposure/OSWER-Directive-9200-1-120-ExposureFactors.pdf

USEPA, 2014b. *Vapor Intrusion Screening Level Calculator*, Version 3.2.1. United States Environmental Protection Agency, Office of Research and Development, Technical Documents and Tools to Support Subsurface Vapor Intrusion Guidance, Office of Solid Waste and Emergency Response. February 5, 2014 update.
http://www.epa.gov/oswer/vaporintrusion/guidance.html#Item6

USEPA SG-SCREEN
Version 2.0, 04/2003

DTSC Modification
December 2014

# Department of Toxic Substances Control
# Vapor Intrusion Screening Model - Soil Gas

DATA ENTRY SHEET

**Scenario:** Residential
**Chemical:** Acetone

| Results Summary | | | | |
|---|---|---|---|---|
| Soil Gas Conc. ($\mu g/m^3$) | Attenuation Factor (unitless) | Indoor Air Conc. ($\mu g/m^3$) | Cancer Risk | Noncancer Hazard |
| 2.40E+01 | 1.9E-04 | 4.5E-03 | NA | 1.4E-07 |

Reset to Defaults

Soil Gas Concentration Data

| ENTER Chemical CAS No. (numbers only, no dashes) | ENTER Soil gas conc., $C_g$ ($\mu g/m^3$) | OR | ENTER Soil gas conc., $C_g$ (ppmv) | Chemical |
|---|---|---|---|---|
| 67641 | 2.40E+01 | | | Acetone |

MORE ↓

| ENTER Depth below grade to bottom of enclosed space floor, $L_F$ (15 or 200 cm) | ENTER Soil gas sampling depth below grade, $L_s$ (cm) | ENTER Average soil temperature, $T_S$ ($^oC$) | ENTER Vadose zone SCS soil type (used to estimate soil vapor permeability) | OR | ENTER User-defined vadose zone soil vapor permeability, $k_v$ ($cm^2$) |
|---|---|---|---|---|---|
| 15 | 914 | 24 | SIL | | |

MORE ↓

| ENTER Vandose zone SCS soil type (Lookup Soil Parameters) | ENTER Vadose zone soil dry bulk density, $\rho_b^A$ ($g/cm^3$) | ENTER Vadose zone soil total porosity, $n^V$ (unitless) | ENTER Vadose zone soil water-filled porosity, $\theta_w^V$ ($cm^3/cm^3$) | ENTER Average vapor flow rate into bldg. (Leave blank to calculate) $Q_{soil}$ (L/m) |
|---|---|---|---|---|
| SIL | 1.49 | 0.439 | 0.18 | 5 |

MORE ↓

Lookup Receptor Parameters

| | ENTER Averaging time for carcinogens, $AT_C$ (yrs) | ENTER Averaging time for noncarcinogens, $AT_{NC}$ (yrs) | ENTER Exposure duration, ED (yrs) | ENTER Exposure frequency, EF (days/yr) | ENTER Exposure Time ET (hrs/day) | ENTER Air Exchange Rate ACH $(hour)^{-1}$ |
|---|---|---|---|---|---|---|
| NEW=> Residential | 70 | 26 | 26 | 350 | 24 (NEW) | 0.5 (NEW) |

END

**Acetone**

| Diffusivity in air, $D_a$ ($cm^2/s$) | Diffusivity in water, $D_w$ ($cm^2/s$) | Henry's law constant at reference temperature, H (atm-$m^3$/mol) | Henry's law constant reference temperature, $T_R$ ($^oC$) | Enthalpy of vaporization at the normal boiling point, $\Delta H_{v,b}$ (cal/mol) | Normal boiling point, $T_B$ ($^oK$) | Critical temperature, $T_C$ ($^oK$) | Unit risk factor, URF ($\mu g/m^3)^{-1}$ | Reference conc., RfC ($mg/m^3$) | Molecular weight, MW (g/mol) |
|---|---|---|---|---|---|---|---|---|---|
| 1.06E-01 | 1.15E-05 | 3.50E-05 | 25 | 6,955 | 329.20 | 508.10 | 0.0E+00 | 3.1E+01 | 58.08 |

**END**

INTERMEDIATE CALCULATIONS SHEET

**Scenario:** **Residential**

**Chemical:** **Acetone**

| Source-building separation, $L_T$ (cm) | Vadose zone soil air-filled porosity, $\theta_a^V$ ($cm^3/cm^3$) | Vadose zone effective total fluid saturation, $S_{te}$ ($cm^3/cm^3$) | Vadose zone soil intrinsic permeability, $k_i$ ($cm^2$) | Vadose zone soil relative air permeability, $k_{rg}$ ($cm^2$) | Vadose zone soil effective vapor permeability, $k_v$ ($cm^2$) | Floor-wall seam perimeter, $X_{crack}$ (cm) | Soil gas conc. ($\mu g/m^3$) | Bldg. ventilation rate, $Q_{building}$ ($cm^3/s$) |
|---|---|---|---|---|---|---|---|---|
| 899 | 0.259 | 0.307 | 2.89E-09 | 0.798 | 2.30E-09 | 4,000 | 2.40E+01 | 3.39E+04 |

| Area of enclosed space below grade, $A_B$ ($cm^2$) | Crack-to-total area ratio, $\eta$ (unitless) | Crack depth below grade, $Z_{crack}$ (cm) | Enthalpy of vaporization at ave. soil temperature, $\Delta H_{v,TS}$ (cal/mol) | Henry's law constant at ave. soil temperature, $H_{TS}$ (atm-$m^3$/mol) | Henry's law constant at ave. soil temperature, $H'_{TS}$ (unitless) | Vapor viscosity at ave. soil temperature, $\mu_{TS}$ (g/cm-s) | Vadose zone effective diffusion coefficient, $D^{eff}_V$ ($cm^2/s$) | Diffusion path length, $L_d$ (cm) |
|---|---|---|---|---|---|---|---|---|
| 1.00E+06 | 5.00E-03 | 15 | 7,384 | 3.36E-05 | 1.38E-03 | 1.80E-04 | 6.26E-03 | 899 |

| Convection path length, $L_p$ (cm) | Source vapor conc., $C_{source}$ ($\mu g/m^3$) | Crack radius, $r_{crack}$ (cm) | Average vapor flow rate into bldg., $Q_{soil}$ ($cm^3/s$) | Crack effective diffusion coefficient, $D^{crack}$ ($cm^2/s$) | Area of crack, $A_{crack}$ ($cm^2$) | Exponent of equivalent foundation Peclet number, $exp(Pe^f)$ (unitless) | Infinite source indoor attenuation coefficient, $\alpha$ (unitless) | Infinite source bldg. conc., $C_{building}$ ($\mu g/m^3$) |
|---|---|---|---|---|---|---|---|---|
| 15 | 2.40E+01 | 1.25 | 8.33E+01 | 6.26E-03 | 5.00E+03 | 3.69E+11 | **1.90E-04** | 4.55E-03 |

| Unit risk factor, URF $(\mu g/m^3)^{-1}$ | Reference conc., RfC ($mg/m^3$) |
|---|---|
| NA | 3.1E+01 |

**END**

**Scenario:** **Residential**
**Chemical:** **Acetone**

INCREMENTAL RISK CALCULATIONS:

| Incremental risk from vapor intrusion to indoor air, carcinogen (unitless) | Hazard quotient from vapor intrusion to indoor air, noncarcinogen (unitless) |
|---|---|
| **NA** | **1.4E-07** |

**MESSAGE SUMMARY BELOW:**

**END**

USEPA SG-SCREEN
Version 2.0, 04/2003

DTSC Modification
December 2014

# Department of Toxic Substances Control
# Vapor Intrusion Screening Model - Soil Gas

DATA ENTRY SHEET

**Scenario:** Commercial
**Chemical:** Acetone

| Results Summary | | | | |
|---|---|---|---|---|
| Soil Gas Conc. ($\mu g/m^3$) | Attenuation Factor (unitless) | Indoor Air Conc. ($\mu g/m^3$) | Cancer Risk | Noncancer Hazard |
| 2.40E+01 | 9.5E-05 | 2.3E-03 | NA | 1.7E-08 |

Reset to Defaults

Soil Gas Concentration Data

| ENTER Chemical CAS No. (numbers only, no dashes) | ENTER Soil gas conc., $C_g$ ($\mu g/m^3$) | OR | ENTER Soil gas conc., $C_g$ (ppmv) | Chemical |
|---|---|---|---|---|
| 67641 | 2.40E+01 | | | Acetone |

MORE ↓

| ENTER Depth below grade to bottom of enclosed space floor, $L_F$ (15 or 200 cm) | ENTER Soil gas sampling depth below grade, $L_s$ (cm) | ENTER Average soil temperature, $T_S$ ($^oC$) | ENTER Vadose zone SCS soil type (used to estimate soil vapor permeability) | OR | ENTER User-defined vadose zone soil vapor permeability, $k_v$ ($cm^2$) |
|---|---|---|---|---|---|
| 15 | 914 | 24 | SIL | | |

MORE ↓

| ENTER Vandose zone SCS soil type (Lookup Soil Parameters) | ENTER Vadose zone soil dry bulk density, $\rho_b^A$ ($g/cm^3$) | ENTER Vadose zone soil total porosity, $n^V$ (unitless) | ENTER Vadose zone soil water-filled porosity, $\theta_w^V$ ($cm^3/cm^3$) | ENTER Average vapor flow rate into bldg. (Leave blank to calculate) $Q_{soil}$ (L/m) |
|---|---|---|---|---|
| SIL | 1.49 | 0.439 | 0.18 | 5 |

MORE ↓

Lookup Receptor Parameters

| | ENTER Averaging time for carcinogens, $AT_C$ (yrs) | ENTER Averaging time for noncarcinogens, $AT_{NC}$ (yrs) | ENTER Exposure duration, ED (yrs) | ENTER Exposure frequency, EF (days/yr) | ENTER Exposure Time ET (hrs/day) | ENTER Air Exchange Rate ACH $(hour)^{-1}$ |
|---|---|---|---|---|---|---|
| NEW=> Commercial | 70 | 25 | 25 | 250 | 8 | 1 |
| | | | | | (NEW) | (NEW) |

END

**Acetone**

| Diffusivity in air, $D_a$ ($cm^2/s$) | Diffusivity in water, $D_w$ ($cm^2/s$) | Henry's law constant at reference temperature, H (atm-$m^3$/mol) | Henry's law constant reference temperature, $T_R$ ($^oC$) | Enthalpy of vaporization at the normal boiling point, $\Delta H_{v,b}$ (cal/mol) | Normal boiling point, $T_B$ ($^oK$) | Critical temperature, $T_C$ ($^oK$) | Unit risk factor, URF ($\mu g/m^3)^{-1}$ | Reference conc., RfC ($mg/m^3$) | Molecular weight, MW (g/mol) |
|---|---|---|---|---|---|---|---|---|---|
| 1.06E-01 | 1.15E-05 | 3.50E-05 | 25 | 6,955 | 329.20 | 508.10 | 0.0E+00 | 3.1E+01 | 58.08 |

**END**

INTERMEDIATE CALCULATIONS SHEET

**Scenario:** **Commercial**

**Chemical:** **Acetone**

| Source-building separation, $L_T$ (cm) | Vadose zone soil air-filled porosity, $\theta_a^V$ ($cm^3/cm^3$) | Vadose zone effective total fluid saturation, $S_{te}$ ($cm^3/cm^3$) | Vadose zone soil intrinsic permeability, $k_i$ ($cm^2$) | Vadose zone soil relative air permeability, $k_{rg}$ ($cm^2$) | Vadose zone soil effective vapor permeability, $k_v$ ($cm^2$) | Floor-wall seam perimeter, $X_{crack}$ (cm) | Soil gas conc. ($\mu g/m^3$) | Bldg. ventilation rate, $Q_{building}$ ($cm^3/s$) |
|---|---|---|---|---|---|---|---|---|
| 899 | 0.259 | 0.307 | 2.89E-09 | 0.798 | 2.30E-09 | 4,000 | 2.40E+01 | 6.78E+04 |

| Area of enclosed space below grade, $A_B$ ($cm^2$) | Crack-to-total area ratio, $\eta$ (unitless) | Crack depth below grade, $Z_{crack}$ (cm) | Enthalpy of vaporization at ave. soil temperature, $\Delta H_{v,TS}$ (cal/mol) | Henry's law constant at ave. soil temperature, $H_{TS}$ (atm-$m^3$/mol) | Henry's law constant at ave. soil temperature, $H'_{TS}$ (unitless) | Vapor viscosity at ave. soil temperature, $\mu_{TS}$ (g/cm-s) | Vadose zone effective diffusion coefficient, $D^{eff}_V$ ($cm^2/s$) | Diffusion path length, $L_d$ (cm) |
|---|---|---|---|---|---|---|---|---|
| 1.00E+06 | 5.00E-03 | 15 | 7,384 | 3.36E-05 | 1.38E-03 | 1.80E-04 | 6.26E-03 | 899 |

| Convection path length, $L_p$ (cm) | Source vapor conc., $C_{source}$ ($\mu g/m^3$) | Crack radius, $r_{crack}$ (cm) | Average vapor flow rate into bldg., $Q_{soil}$ ($cm^3/s$) | Crack effective diffusion coefficient, $D^{crack}$ ($cm^2/s$) | Area of crack, $A_{crack}$ ($cm^2$) | Exponent of equivalent foundation Peclet number, $exp(Pe^f)$ (unitless) | Infinite source indoor attenuation coefficient, $\alpha$ (unitless) | Infinite source bldg. conc., $C_{building}$ ($\mu g/m^3$) |
|---|---|---|---|---|---|---|---|---|
| 15 | 2.40E+01 | 1.25 | 8.33E+01 | 6.26E-03 | 5.00E+03 | 3.69E+11 | **9.48E-05** | 2.27E-03 |

| Unit risk factor, URF $(\mu g/m^3)^{-1}$ | Reference conc., RfC ($mg/m^3$) |
|---|---|
| NA | 3.1E+01 |

**END**

**Scenario:** **Commercial**
**Chemical:** **Acetone**

INCREMENTAL RISK CALCULATIONS:

| Incremental risk from vapor intrusion to indoor air, carcinogen (unitless) | Hazard quotient from vapor intrusion to indoor air, noncarcinogen (unitless) |
|---|---|
| **NA** | **1.7E-08** |

**MESSAGE SUMMARY BELOW:**

**END**

USEPA SG-SCREEN
Version 2.0, 04/2003

DTSC Modification
December 2014

# Department of Toxic Substances Control
# Vapor Intrusion Screening Model - Soil Gas

DATA ENTRY SHEET

**Scenario:** Residential
**Chemical:** Carbon tetrachloride

| Results Summary | | | | |
|---|---|---|---|---|
| Soil Gas Conc. ($\mu g/m^3$) | Attenuation Factor (unitless) | Indoor Air Conc. ($\mu g/m^3$) | Cancer Risk | Noncancer Hazard |
| 2.50E+01 | 2.7E-04 | 6.8E-03 | 1.0E-07 | 1.6E-04 |

Reset to Defaults

Soil Gas Concentration Data

| ENTER Chemical CAS No. (numbers only, no dashes) | ENTER Soil gas conc., $C_g$ ($\mu g/m^3$) | OR | ENTER Soil gas conc., $C_g$ (ppmv) | Chemical |
|---|---|---|---|---|
| 56235 | 2.50E+01 | | | Carbon tetrachloride |

MORE ↓

| ENTER Depth below grade to bottom of enclosed space floor, $L_F$ (15 or 200 cm) | ENTER Soil gas sampling depth below grade, $L_s$ (cm) | ENTER Average soil temperature, $T_S$ ($^oC$) | ENTER Vadose zone SCS soil type (used to estimate soil vapor permeability) | OR | ENTER User-defined vadose zone soil vapor permeability, $k_v$ ($cm^2$) |
|---|---|---|---|---|---|
| 15 | 335 | 24 | SIL | | |

MORE ↓

| ENTER Vandose zone SCS soil type (Lookup Soil Parameters) | ENTER Vadose zone soil dry bulk density, $\rho_b^A$ ($g/cm^3$) | ENTER Vadose zone soil total porosity, $n^V$ (unitless) | ENTER Vadose zone soil water-filled porosity, $\theta_w^V$ ($cm^3/cm^3$) | ENTER Average vapor flow rate into bldg. (Leave blank to calculate) $Q_{soil}$ (L/m) |
|---|---|---|---|---|
| SIL | 1.49 | 0.439 | 0.18 | 5 |

MORE ↓

Lookup Receptor Parameters

| | ENTER Averaging time for carcinogens, $AT_C$ (yrs) | ENTER Averaging time for noncarcinogens, $AT_{NC}$ (yrs) | ENTER Exposure duration, ED (yrs) | ENTER Exposure frequency, EF (days/yr) | ENTER Exposure Time ET (hrs/day) | ENTER Air Exchange Rate ACH $(hour)^{-1}$ |
|---|---|---|---|---|---|---|
| NEW=> Residential | 70 | 26 | 26 | 350 | 24 | 0.5 |
| | | | | | (NEW) | (NEW) |

END

## Carbon tetrachloride

| Diffusivity in air, $D_a$ ($cm^2/s$) | Diffusivity in water, $D_w$ ($cm^2/s$) | Henry's law constant at reference temperature, H ($atm\text{-}m^3/mol$) | Henry's law constant reference temperature, $T_R$ ($^oC$) | Enthalpy of vaporization at the normal boiling point, $\Delta H_{v,b}$ (cal/mol) | Normal boiling point, $T_B$ ($^oK$) | Critical temperature, $T_C$ ($^oK$) | Unit risk factor, URF $(\mu g/m^3)^{-1}$ | Reference conc., RfC ($mg/m^3$) | Molecular weight, MW (g/mol) |
|---|---|---|---|---|---|---|---|---|---|
| 5.71E-02 | 9.79E-06 | 2.76E-02 | 25 | 7,127 | 349.90 | 556.60 | 4.2E-05 | 4.0E-02 | 153.82 |

**END**

**Scenario:** **Residential**

**Chemical:** **Carbon tetrachloride**

| Source-building separation, $L_T$ (cm) | Vadose zone soil air-filled porosity, $\theta_a^V$ ($cm^3/cm^3$) | Vadose zone effective total fluid saturation, $S_{te}$ ($cm^3/cm^3$) | Vadose zone soil intrinsic permeability, $k_i$ ($cm^2$) | Vadose zone soil relative air permeability, $k_{rg}$ ($cm^2$) | Vadose zone soil effective vapor permeability, $k_v$ ($cm^2$) | Floor-wall seam perimeter, $X_{crack}$ (cm) | Soil gas conc. ($\mu g/m^3$) | Bldg. ventilation rate, $Q_{building}$ ($cm^3/s$) |
|---|---|---|---|---|---|---|---|---|
| 320 | 0.259 | 0.307 | 2.89E-09 | 0.798 | 2.30E-09 | 4,000 | 2.50E+01 | 3.39E+04 |

| Area of enclosed space below grade, $A_B$ ($cm^2$) | Crack-to-total area ratio, $\eta$ (unitless) | Crack depth below grade, $Z_{crack}$ (cm) | Enthalpy of vaporization at ave. soil temperature, $\Delta H_{v,TS}$ (cal/mol) | Henry's law constant at ave. soil temperature, $H_{TS}$ (atm-$m^3$/mol) | Henry's law constant at ave. soil temperature, $H'_{TS}$ (unitless) | Vapor viscosity at ave. soil temperature, $\mu_{TS}$ (g/cm-s) | Vadose zone effective diffusion coefficient, $D^{eff}_V$ ($cm^2/s$) | Diffusion path length, $L_d$ (cm) |
|---|---|---|---|---|---|---|---|---|
| 1.00E+06 | 5.00E-03 | 15 | 7,716 | 2.64E-02 | 1.08E+00 | 1.80E-04 | 3.30E-03 | 320 |

| Convection path length, $L_p$ (cm) | Source vapor conc., $C_{source}$ ($\mu g/m^3$) | Crack radius, $r_{crack}$ (cm) | Average vapor flow rate into bldg., $Q_{soil}$ ($cm^3/s$) | Crack effective diffusion coefficient, $D^{crack}$ ($cm^2/s$) | Area of crack, $A_{crack}$ ($cm^2$) | Exponent of equivalent foundation Peclet number, $exp(Pe^f)$ (unitless) | Infinite source indoor attenuation coefficient, $\alpha$ (unitless) | Infinite source bldg. conc., $C_{building}$ ($\mu g/m^3$) |
|---|---|---|---|---|---|---|---|---|
| 15 | 2.50E+01 | 1.25 | 8.33E+01 | 3.30E-03 | 5.00E+03 | 8.76E+21 | **2.71E-04** | 6.77E-03 |

| Unit risk factor, URF $(\mu g/m^3)^{-1}$ | Reference conc., RfC ($mg/m^3$) |
|---|---|
| 4.2E-05 | 4.0E-02 |

**END**

RESULTS SHEET

**Scenario:** **Residential**
**Chemical:** **Carbon tetrachloride**

INCREMENTAL RISK CALCULATIONS:

| Incremental risk from vapor intrusion to indoor air, carcinogen (unitless) | Hazard quotient from vapor intrusion to indoor air, noncarcinogen (unitless) |
|---|---|
| **1.0E-07** | **1.6E-04** |

**MESSAGE SUMMARY BELOW:**

**END**

USEPA SG-SCREEN
Version 2.0, 04/2003

DTSC Modification
December 2014

# Department of Toxic Substances Control
# Vapor Intrusion Screening Model - Soil Gas

DATA ENTRY SHEET

**Scenario:** Commercial
**Chemical:** Carbon tetrachloride

| Results Summary | | | | |
|---|---|---|---|---|
| Soil Gas Conc. ($\mu g/m^3$) | Attenuation Factor (unitless) | Indoor Air Conc. ($\mu g/m^3$) | Cancer Risk | Noncancer Hazard |
| 2.50E+01 | 1.4E-04 | 3.4E-03 | 1.2E-08 | 1.9E-05 |

Reset to Defaults

Soil Gas Concentration Data

| ENTER Chemical CAS No. (numbers only, no dashes) | ENTER Soil gas conc., $C_g$ ($\mu g/m^3$) | OR | ENTER Soil gas conc., $C_g$ (ppmv) | Chemical |
|---|---|---|---|---|
| 56235 | 2.50E+01 | | | Carbon tetrachloride |

MORE ↓

| ENTER Depth below grade to bottom of enclosed space floor, $L_F$ (15 or 200 cm) | ENTER Soil gas sampling depth below grade, $L_s$ (cm) | ENTER Average soil temperature, $T_S$ ($^oC$) | ENTER Vadose zone SCS soil type (used to estimate soil vapor permeability) | OR | ENTER User-defined vadose zone soil vapor permeability, $k_v$ ($cm^2$) |
|---|---|---|---|---|---|
| 15 | 335 | 24 | SIL | | |

MORE ↓

| ENTER Vandose zone SCS soil type (Lookup Soil Parameters) | ENTER Vadose zone soil dry bulk density, $\rho_b^A$ ($g/cm^3$) | ENTER Vadose zone soil total porosity, $n^V$ (unitless) | ENTER Vadose zone soil water-filled porosity, $\theta_w^V$ ($cm^3/cm^3$) | ENTER Average vapor flow rate into bldg. (Leave blank to calculate) $Q_{soil}$ (L/m) |
|---|---|---|---|---|
| SIL | 1.49 | 0.439 | 0.18 | 5 |

MORE ↓

Lookup Receptor Parameters

| | ENTER Averaging time for carcinogens, $AT_C$ (yrs) | ENTER Averaging time for noncarcinogens, $AT_{NC}$ (yrs) | ENTER Exposure duration, ED (yrs) | ENTER Exposure frequency, EF (days/yr) | ENTER Exposure Time ET (hrs/day) | ENTER Air Exchange Rate ACH $(hour)^{-1}$ |
|---|---|---|---|---|---|---|
| NEW=> Commercial | 70 | 25 | 25 | 250 | 8 | 1 |
| | | | | | (NEW) | (NEW) |

END

## Carbon tetrachloride

| Diffusivity in air, $D_a$ ($cm^2/s$) | Diffusivity in water, $D_w$ ($cm^2/s$) | Henry's law constant at reference temperature, H ($atm\text{-}m^3/mol$) | Henry's law constant reference temperature, $T_R$ ($^oC$) | Enthalpy of vaporization at the normal boiling point, $\Delta H_{v,b}$ (cal/mol) | Normal boiling point, $T_B$ ($^oK$) | Critical temperature, $T_C$ ($^oK$) | Unit risk factor, URF $(\mu g/m^3)^{-1}$ | Reference conc., RfC ($mg/m^3$) | Molecular weight, MW (g/mol) |
|---|---|---|---|---|---|---|---|---|---|
| 5.71E-02 | 9.79E-06 | 2.76E-02 | 25 | 7,127 | 349.90 | 556.60 | 4.2E-05 | 4.0E-02 | 153.82 |

**END**

**Scenario:** **Commercial**

**Chemical:** **Carbon tetrachloride**

| Source-building separation, $L_T$ (cm) | Vadose zone soil air-filled porosity, $\theta_a^V$ ($cm^3/cm^3$) | Vadose zone effective total fluid saturation, $S_{te}$ ($cm^3/cm^3$) | Vadose zone soil intrinsic permeability, $k_i$ ($cm^2$) | Vadose zone soil relative air permeability, $k_{rg}$ ($cm^2$) | Vadose zone soil effective vapor permeability, $k_v$ ($cm^2$) | Floor-wall seam perimeter, $X_{crack}$ (cm) | Soil gas conc. ($\mu g/m^3$) | Bldg. ventilation rate, $Q_{building}$ ($cm^3/s$) |
|---|---|---|---|---|---|---|---|---|
| 320 | 0.259 | 0.307 | 2.89E-09 | 0.798 | 2.30E-09 | 4,000 | 2.50E+01 | 6.78E+04 |

| Area of enclosed space below grade, $A_B$ ($cm^2$) | Crack-to-total area ratio, $\eta$ (unitless) | Crack depth below grade, $Z_{crack}$ (cm) | Enthalpy of vaporization at ave. soil temperature, $\Delta H_{v,TS}$ (cal/mol) | Henry's law constant at ave. soil temperature, $H_{TS}$ (atm-$m^3$/mol) | Henry's law constant at ave. soil temperature, $H'_{TS}$ (unitless) | Vapor viscosity at ave. soil temperature, $\mu_{TS}$ (g/cm-s) | Vadose zone effective diffusion coefficient, $D^{eff}_V$ ($cm^2/s$) | Diffusion path length, $L_d$ (cm) |
|---|---|---|---|---|---|---|---|---|
| 1.00E+06 | 5.00E-03 | 15 | 7,716 | 2.64E-02 | 1.08E+00 | 1.80E-04 | 3.30E-03 | 320 |

| Convection path length, $L_p$ (cm) | Source vapor conc., $C_{source}$ ($\mu g/m^3$) | Crack radius, $r_{crack}$ (cm) | Average vapor flow rate into bldg., $Q_{soil}$ ($cm^3/s$) | Crack effective diffusion coefficient, $D^{crack}$ ($cm^2/s$) | Area of crack, $A_{crack}$ ($cm^2$) | Exponent of equivalent foundation Peclet number, $exp(Pe^f)$ (unitless) | Infinite source indoor attenuation coefficient, $\alpha$ (unitless) | Infinite source bldg. conc., $C_{building}$ ($\mu g/m^3$) |
|---|---|---|---|---|---|---|---|---|
| 15 | 2.50E+01 | 1.25 | 8.33E+01 | 3.30E-03 | 5.00E+03 | 8.76E+21 | **1.35E-04** | 3.38E-03 |

| Unit risk factor, URF $(\mu g/m^3)^{-1}$ | Reference conc., RfC ($mg/m^3$) |
|---|---|
| 4.2E-05 | 4.0E-02 |

**END**

**Scenario:** **Commercial**
**Chemical:** **Carbon tetrachloride**

INCREMENTAL RISK CALCULATIONS:

| Incremental risk from vapor intrusion to indoor air, carcinogen (unitless) | Hazard quotient from vapor intrusion to indoor air, noncarcinogen (unitless) |
|---|---|
| **1.2E-08** | **1.9E-05** |

**MESSAGE SUMMARY BELOW:**

**END**

USEPA SG-SCREEN
Version 2.0, 04/2003

DTSC Modification
December 2014

# Department of Toxic Substances Control
# Vapor Intrusion Screening Model - Soil Gas

DATA ENTRY SHEET

**Scenario:** Residential
**Chemical:** Chloroform

| Results Summary | | | | |
|---|---|---|---|---|
| Soil Gas Conc. ($\mu g/m^3$) | Attenuation Factor (unitless) | Indoor Air Conc. ($\mu g/m^3$) | Cancer Risk | Noncancer Hazard |
| 2.90E+01 | 1.4E-04 | 4.0E-03 | 3.3E-08 | 3.9E-05 |

Reset to Defaults

Soil Gas Concentration Data

| ENTER Chemical CAS No. (numbers only, no dashes) | ENTER Soil gas conc., $C_g$ ($\mu g/m^3$) | OR | ENTER Soil gas conc., $C_g$ (ppmv) | Chemical |
|---|---|---|---|---|
| 67663 | 2.90E+01 | | | Chloroform |

MORE ↓

| ENTER Depth below grade to bottom of enclosed space floor, $L_F$ (15 or 200 cm) | ENTER Soil gas sampling depth below grade, $L_s$ (cm) | ENTER Average soil temperature, $T_S$ ($^oC$) | ENTER Vadose zone SCS soil type (used to estimate soil vapor permeability) | OR | ENTER User-defined vadose zone soil vapor permeability, $k_v$ ($cm^2$) |
|---|---|---|---|---|---|
| 15 | 914 | 24 | SIL | | |

MORE ↓

| ENTER Vandose zone SCS soil type (Lookup Soil Parameters) | ENTER Vadose zone soil dry bulk density, $\rho_b^A$ ($g/cm^3$) | ENTER Vadose zone soil total porosity, $n^V$ (unitless) | ENTER Vadose zone soil water-filled porosity, $\theta_w^V$ ($cm^3/cm^3$) | ENTER Average vapor flow rate into bldg. (Leave blank to calculate) $Q_{soil}$ (L/m) |
|---|---|---|---|---|
| SIL | 1.49 | 0.439 | 0.18 | 5 |

MORE ↓

Lookup Receptor Parameters

| | ENTER Averaging time for carcinogens, $AT_C$ (yrs) | ENTER Averaging time for noncarcinogens, $AT_{NC}$ (yrs) | ENTER Exposure duration, ED (yrs) | ENTER Exposure frequency, EF (days/yr) | ENTER Exposure Time ET (hrs/day) | ENTER Air Exchange Rate ACH $(hour)^{-1}$ |
|---|---|---|---|---|---|---|
| NEW=> Residential | 70 | 26 | 26 | 350 | 24 | 0.5 |
| | | | | | (NEW) | (NEW) |

END

**Chloroform**

| Diffusivity in air, $D_a$ ($cm^2/s$) | Diffusivity in water, $D_w$ ($cm^2/s$) | Henry's law constant at reference temperature, H (atm-$m^3$/mol) | Henry's law constant reference temperature, $T_R$ ($^oC$) | Enthalpy of vaporization at the normal boiling point, $\Delta H_{v,b}$ (cal/mol) | Normal boiling point, $T_B$ ($^oK$) | Critical temperature, $T_C$ ($^oK$) | Unit risk factor, URF ($\mu g/m^3)^{-1}$ | Reference conc., RfC ($mg/m^3$) | Molecular weight, MW (g/mol) |
|---|---|---|---|---|---|---|---|---|---|
| 7.69E-02 | 1.09E-05 | 3.67E-03 | 25 | 6,988 | 334.32 | 536.40 | 2.3E-05 | 9.8E-02 | 119.38 |

**END**

INTERMEDIATE CALCULATIONS SHEET

**Scenario:** **Residential**

**Chemical:** **Chloroform**

| Source-building separation, $L_T$ (cm) | Vadose zone soil air-filled porosity, $\theta_a^V$ ($cm^3/cm^3$) | Vadose zone effective total fluid saturation, $S_{te}$ ($cm^3/cm^3$) | Vadose zone soil intrinsic permeability, $k_i$ ($cm^2$) | Vadose zone soil relative air permeability, $k_{rg}$ ($cm^2$) | Vadose zone soil effective vapor permeability, $k_v$ ($cm^2$) | Floor-wall seam perimeter, $X_{crack}$ (cm) | Soil gas conc. ($\mu g/m^3$) | Bldg. ventilation rate, $Q_{building}$ ($cm^3/s$) |
|---|---|---|---|---|---|---|---|---|
| 899 | 0.259 | 0.307 | 2.89E-09 | 0.798 | 2.30E-09 | 4,000 | 2.90E+01 | 3.39E+04 |

| Area of enclosed space below grade, $A_B$ ($cm^2$) | Crack-to-total area ratio, $\eta$ (unitless) | Crack depth below grade, $Z_{crack}$ (cm) | Enthalpy of vaporization at ave. soil temperature, $\Delta H_{v,TS}$ (cal/mol) | Henry's law constant at ave. soil temperature, $H_{TS}$ (atm-$m^3$/mol) | Henry's law constant at ave. soil temperature, $H'_{TS}$ (unitless) | Vapor viscosity at ave. soil temperature, $\mu_{TS}$ (g/cm-s) | Vadose zone effective diffusion coefficient, $D^{eff}_V$ ($cm^2/s$) | Diffusion path length, $L_d$ (cm) |
|---|---|---|---|---|---|---|---|---|
| 1.00E+06 | 5.00E-03 | 15 | 7,407 | 3.52E-03 | 1.44E-01 | 1.80E-04 | 4.44E-03 | 899 |

| Convection path length, $L_p$ (cm) | Source vapor conc., $C_{source}$ ($\mu g/m^3$) | Crack radius, $r_{crack}$ (cm) | Average vapor flow rate into bldg., $Q_{soil}$ ($cm^3/s$) | Crack effective diffusion coefficient, $D^{crack}$ ($cm^2/s$) | Area of crack, $A_{crack}$ ($cm^2$) | Exponent of equivalent foundation Peclet number, $exp(Pe^f)$ (unitless) | Infinite source indoor attenuation coefficient, $\alpha$ (unitless) | Infinite source bldg. conc., $C_{building}$ ($\mu g/m^3$) |
|---|---|---|---|---|---|---|---|---|
| 15 | 2.90E+01 | 1.25 | 8.33E+01 | 4.44E-03 | 5.00E+03 | 1.98E+16 | **1.38E-04** | 3.99E-03 |

| Unit risk factor, URF $(\mu g/m^3)^{-1}$ | Reference conc., RfC ($mg/m^3$) |
|---|---|
| 2.3E-05 | 9.8E-02 |

**END**

RESULTS SHEET

**Scenario:** **Residential**
**Chemical:** **Chloroform**

INCREMENTAL RISK CALCULATIONS:

| Incremental risk from vapor intrusion to indoor air, carcinogen (unitless) | Hazard quotient from vapor intrusion to indoor air, noncarcinogen (unitless) |
|---|---|
| **3.3E-08** | **3.9E-05** |

**MESSAGE SUMMARY BELOW:**

**END**

USEPA SG-SCREEN
Version 2.0, 04/2003

DTSC Modification
December 2014

# Department of Toxic Substances Control
# Vapor Intrusion Screening Model - Soil Gas

DATA ENTRY SHEET

**Scenario:** Commercial
**Chemical:** Chloroform

| Results Summary | | | | |
|---|---|---|---|---|
| Soil Gas Conc. ($\mu g/m^3$) | Attenuation Factor (unitless) | Indoor Air Conc. ($\mu g/m^3$) | Cancer Risk | Noncancer Hazard |
| 2.90E+01 | 6.9E-05 | 2.0E-03 | 3.7E-09 | 4.6E-06 |

Reset to Defaults

Soil Gas Concentration Data

| ENTER Chemical CAS No. (numbers only, no dashes) | ENTER Soil gas conc., $C_g$ ($\mu g/m^3$) | OR | ENTER Soil gas conc., $C_g$ (ppmv) | Chemical |
|---|---|---|---|---|
| 67663 | 2.90E+01 | | | Chloroform |

MORE ↓

| ENTER Depth below grade to bottom of enclosed space floor, $L_F$ (15 or 200 cm) | ENTER Soil gas sampling depth below grade, $L_s$ (cm) | ENTER Average soil temperature, $T_S$ ($^oC$) | ENTER Vadose zone SCS soil type (used to estimate soil vapor permeability) | OR | ENTER User-defined vadose zone soil vapor permeability, $k_v$ ($cm^2$) |
|---|---|---|---|---|---|
| 15 | 914 | 24 | SIL | | |

MORE ↓

| ENTER Vandose zone SCS soil type (Lookup Soil Parameters) | ENTER Vadose zone soil dry bulk density, $\rho_b^A$ ($g/cm^3$) | ENTER Vadose zone soil total porosity, $n^V$ (unitless) | ENTER Vadose zone soil water-filled porosity, $\theta_w^V$ ($cm^3/cm^3$) | ENTER Average vapor flow rate into bldg. (Leave blank to calculate) $Q_{soil}$ (L/m) |
|---|---|---|---|---|
| SIL | 1.49 | 0.439 | 0.18 | 5 |

MORE ↓

Lookup Receptor Parameters

| | ENTER Averaging time for carcinogens, $AT_C$ (yrs) | ENTER Averaging time for noncarcinogens, $AT_{NC}$ (yrs) | ENTER Exposure duration, ED (yrs) | ENTER Exposure frequency, EF (days/yr) | ENTER Exposure Time ET (hrs/day) | ENTER Air Exchange Rate ACH $(hour)^{-1}$ |
|---|---|---|---|---|---|---|
| NEW=> Commercial | 70 | 25 | 25 | 250 | 8 | 1 |
| | | | | | (NEW) | (NEW) |

END

**Chloroform**

| Diffusivity in air, $D_a$ ($cm^2/s$) | Diffusivity in water, $D_w$ ($cm^2/s$) | Henry's law constant at reference temperature, H (atm-$m^3$/mol) | Henry's law constant reference temperature, $T_R$ ($^oC$) | Enthalpy of vaporization at the normal boiling point, $\Delta H_{v,b}$ (cal/mol) | Normal boiling point, $T_B$ ($^oK$) | Critical temperature, $T_C$ ($^oK$) | Unit risk factor, URF ($\mu g/m^3)^{-1}$ | Reference conc., RfC ($mg/m^3$) | Molecular weight, MW (g/mol) |
|---|---|---|---|---|---|---|---|---|---|
| 7.69E-02 | 1.09E-05 | 3.67E-03 | 25 | 6,988 | 334.32 | 536.40 | 2.3E-05 | 9.8E-02 | 119.38 |

**END**

INTERMEDIATE CALCULATIONS SHEET

**Scenario:** **Commercial**

**Chemical:** **Chloroform**

| Source-building separation, $L_T$ (cm) | Vadose zone soil air-filled porosity, $\theta_a^V$ ($cm^3/cm^3$) | Vadose zone effective total fluid saturation, $S_{te}$ ($cm^3/cm^3$) | Vadose zone soil intrinsic permeability, $k_i$ ($cm^2$) | Vadose zone soil relative air permeability, $k_{rg}$ ($cm^2$) | Vadose zone soil effective vapor permeability, $k_v$ ($cm^2$) | Floor-wall seam perimeter, $X_{crack}$ (cm) | Soil gas conc. ($\mu g/m^3$) | Bldg. ventilation rate, $Q_{building}$ ($cm^3/s$) |
|---|---|---|---|---|---|---|---|---|
| 899 | 0.259 | 0.307 | 2.89E-09 | 0.798 | 2.30E-09 | 4,000 | 2.90E+01 | 6.78E+04 |

| Area of enclosed space below grade, $A_B$ ($cm^2$) | Crack-to-total area ratio, $\eta$ (unitless) | Crack depth below grade, $Z_{crack}$ (cm) | Enthalpy of vaporization at ave. soil temperature, $\Delta H_{v,TS}$ (cal/mol) | Henry's law constant at ave. soil temperature, $H_{TS}$ (atm-$m^3$/mol) | Henry's law constant at ave. soil temperature, $H'_{TS}$ (unitless) | Vapor viscosity at ave. soil temperature, $\mu_{TS}$ (g/cm-s) | Vadose zone effective diffusion coefficient, $D^{eff}_V$ ($cm^2/s$) | Diffusion path length, $L_d$ (cm) |
|---|---|---|---|---|---|---|---|---|
| 1.00E+06 | 5.00E-03 | 15 | 7,407 | 3.52E-03 | 1.44E-01 | 1.80E-04 | 4.44E-03 | 899 |

| Convection path length, $L_p$ (cm) | Source vapor conc., $C_{source}$ ($\mu g/m^3$) | Crack radius, $r_{crack}$ (cm) | Average vapor flow rate into bldg., $Q_{soil}$ ($cm^3/s$) | Crack effective diffusion coefficient, $D^{crack}$ ($cm^2/s$) | Area of crack, $A_{crack}$ ($cm^2$) | Exponent of equivalent foundation Peclet number, $exp(Pe^f)$ (unitless) | Infinite source indoor attenuation coefficient, $\alpha$ (unitless) | Infinite source bldg. conc., $C_{building}$ ($\mu g/m^3$) |
|---|---|---|---|---|---|---|---|---|
| 15 | 2.90E+01 | 1.25 | 8.33E+01 | 4.44E-03 | 5.00E+03 | 1.98E+16 | **6.88E-05** | 2.00E-03 |

| Unit risk factor, URF $(\mu g/m^3)^{-1}$ | Reference conc., RfC ($mg/m^3$) |
|---|---|
| 2.3E-05 | 9.8E-02 |

**END**

**Scenario:** **Commercial**
**Chemical:** **Chloroform**

INCREMENTAL RISK CALCULATIONS:

| Incremental risk from vapor intrusion to indoor air, carcinogen (unitless) | Hazard quotient from vapor intrusion to indoor air, noncarcinogen (unitless) |
|---|---|
| **3.7E-09** | **4.6E-06** |

**MESSAGE SUMMARY BELOW:**

**END**

USEPA SG-SCREEN
Version 2.0, 04/2003

DTSC Modification
December 2014

# Department of Toxic Substances Control
# Vapor Intrusion Screening Model - Soil Gas

DATA ENTRY SHEET

**Scenario:** Residential
**Chemical:** Chloroform

| Results Summary | | | | |
|---|---|---|---|---|
| Soil Gas Conc. ($\mu g/m^3$) | Attenuation Factor (unitless) | Indoor Air Conc. ($\mu g/m^3$) | Cancer Risk | Noncancer Hazard |
| 2.40E+02 | 6.9E-04 | 1.7E-01 | 1.4E-06 | 1.6E-03 |

Reset to Defaults

Soil Gas Concentration Data

| ENTER Chemical CAS No. (numbers only, no dashes) | ENTER Soil gas conc., $C_g$ ($\mu g/m^3$) | OR | ENTER Soil gas conc., $C_g$ (ppmv) | Chemical |
|---|---|---|---|---|
| 67663 | 2.40E+02 | | | Chloroform |

MORE ↓

| ENTER Depth below grade to bottom of enclosed space floor, $L_F$ (15 or 200 cm) | ENTER Soil gas sampling depth below grade, $L_s$ (cm) | ENTER Average soil temperature, $T_S$ ($^oC$) | ENTER Vadose zone SCS soil type (used to estimate soil vapor permeability) | OR | ENTER User-defined vadose zone soil vapor permeability, $k_v$ ($cm^2$) |
|---|---|---|---|---|---|
| 15 | 152 | 24 | SIL | | |

MORE ↓

| ENTER Vandose zone SCS soil type (Lookup Soil Parameters) | ENTER Vadose zone soil dry bulk density, $\rho_b^A$ ($g/cm^3$) | ENTER Vadose zone soil total porosity, $n^V$ (unitless) | ENTER Vadose zone soil water-filled porosity, $\theta_w^V$ ($cm^3/cm^3$) | ENTER Average vapor flow rate into bldg. (Leave blank to calculate) $Q_{soil}$ (L/m) |
|---|---|---|---|---|
| SIL | 1.49 | 0.439 | 0.18 | 5 |

MORE ↓

Lookup Receptor Parameters

| | ENTER Averaging time for carcinogens, $AT_C$ (yrs) | ENTER Averaging time for noncarcinogens, $AT_{NC}$ (yrs) | ENTER Exposure duration, ED (yrs) | ENTER Exposure frequency, EF (days/yr) | ENTER Exposure Time ET (hrs/day) | ENTER Air Exchange Rate ACH $(hour)^{-1}$ |
|---|---|---|---|---|---|---|
| NEW=> Residential | 70 | 26 | 26 | 350 | 24 | 0.5 |
| | | | | | (NEW) | (NEW) |

END

**Chloroform**

| Diffusivity in air, $D_a$ ($cm^2/s$) | Diffusivity in water, $D_w$ ($cm^2/s$) | Henry's law constant at reference temperature, H (atm-$m^3$/mol) | Henry's law constant reference temperature, $T_R$ ($^oC$) | Enthalpy of vaporization at the normal boiling point, $\Delta H_{v,b}$ (cal/mol) | Normal boiling point, $T_B$ ($^oK$) | Critical temperature, $T_C$ ($^oK$) | Unit risk factor, URF ($\mu g/m^3)^{-1}$ | Reference conc., RfC ($mg/m^3$) | Molecular weight, MW (g/mol) |
|---|---|---|---|---|---|---|---|---|---|
| 7.69E-02 | 1.09E-05 | 3.67E-03 | 25 | 6,988 | 334.32 | 536.40 | 2.3E-05 | 9.8E-02 | 119.38 |

**END**

INTERMEDIATE CALCULATIONS SHEET

**Scenario:** **Residential**

**Chemical:** **Chloroform**

| Source-building separation, $L_T$ (cm) | Vadose zone soil air-filled porosity, $\theta_a^V$ ($cm^3/cm^3$) | Vadose zone effective total fluid saturation, $S_{te}$ ($cm^3/cm^3$) | Vadose zone soil intrinsic permeability, $k_i$ ($cm^2$) | Vadose zone soil relative air permeability, $k_{rg}$ ($cm^2$) | Vadose zone soil effective vapor permeability, $k_v$ ($cm^2$) | Floor-wall seam perimeter, $X_{crack}$ (cm) | Soil gas conc. ($\mu g/m^3$) | Bldg. ventilation rate, $Q_{building}$ ($cm^3/s$) |
|---|---|---|---|---|---|---|---|---|
| 137 | 0.259 | 0.307 | 2.89E-09 | 0.798 | 2.30E-09 | 4,000 | 2.40E+02 | 3.39E+04 |

| Area of enclosed space below grade, $A_B$ ($cm^2$) | Crack-to-total area ratio, $\eta$ (unitless) | Crack depth below grade, $Z_{crack}$ (cm) | Enthalpy of vaporization at ave. soil temperature, $\Delta H_{v,TS}$ (cal/mol) | Henry's law constant at ave. soil temperature, $H_{TS}$ (atm-$m^3$/mol) | Henry's law constant at ave. soil temperature, $H'_{TS}$ (unitless) | Vapor viscosity at ave. soil temperature, $\mu_{TS}$ (g/cm-s) | Vadose zone effective diffusion coefficient, $D^{eff}_V$ ($cm^2/s$) | Diffusion path length, $L_d$ (cm) |
|---|---|---|---|---|---|---|---|---|
| 1.00E+06 | 5.00E-03 | 15 | 7,407 | 3.52E-03 | 1.44E-01 | 1.80E-04 | 4.44E-03 | 137 |

| Convection path length, $L_p$ (cm) | Source vapor conc., $C_{source}$ ($\mu g/m^3$) | Crack radius, $r_{crack}$ (cm) | Average vapor flow rate into bldg., $Q_{soil}$ ($cm^3/s$) | Crack effective diffusion coefficient, $D^{crack}$ ($cm^2/s$) | Area of crack, $A_{crack}$ ($cm^2$) | Exponent of equivalent foundation Peclet number, $exp(Pe^f)$ (unitless) | Infinite source indoor attenuation coefficient, $\alpha$ (unitless) | Infinite source bldg. conc., $C_{building}$ ($\mu g/m^3$) |
|---|---|---|---|---|---|---|---|---|
| 15 | 2.40E+02 | 1.25 | 8.33E+01 | 4.44E-03 | 5.00E+03 | 1.98E+16 | **6.89E-04** | 1.65E-01 |

| Unit risk factor, URF $(\mu g/m^3)^{-1}$ | Reference conc., RfC ($mg/m^3$) |
|---|---|
| 2.3E-05 | 9.8E-02 |

**END**

RESULTS SHEET

**Scenario:** **Residential**
**Chemical:** **Chloroform**

INCREMENTAL RISK CALCULATIONS:

| Incremental risk from vapor intrusion to indoor air, carcinogen (unitless) | Hazard quotient from vapor intrusion to indoor air, noncarcinogen (unitless) |
|---|---|
| **1.4E-06** | **1.6E-03** |

**MESSAGE SUMMARY BELOW:**

**END**

USEPA SG-SCREEN
Version 2.0, 04/2003

DTSC Modification
December 2014

# Department of Toxic Substances Control
# Vapor Intrusion Screening Model - Soil Gas

DATA ENTRY SHEET

**Scenario:** Commercial
**Chemical:** Chloroform

| Results Summary | | | | |
|---|---|---|---|---|
| Soil Gas Conc. ($\mu g/m^3$) | Attenuation Factor (unitless) | Indoor Air Conc. ($\mu g/m^3$) | Cancer Risk | Noncancer Hazard |
| 2.40E+02 | 3.4E-04 | 8.3E-02 | 1.5E-07 | 1.9E-04 |

Reset to Defaults

Soil Gas Concentration Data

| ENTER Chemical CAS No. (numbers only, no dashes) | ENTER Soil gas conc., $C_g$ ($\mu g/m^3$) | OR | ENTER Soil gas conc., $C_g$ (ppmv) | Chemical |
|---|---|---|---|---|
| 67663 | 2.40E+02 | | | Chloroform |

MORE ↓

| ENTER Depth below grade to bottom of enclosed space floor, $L_F$ (15 or 200 cm) | ENTER Soil gas sampling depth below grade, $L_s$ (cm) | ENTER Average soil temperature, $T_S$ ($^oC$) | ENTER Vadose zone SCS soil type (used to estimate soil vapor permeability) | OR | ENTER User-defined vadose zone soil vapor permeability, $k_v$ ($cm^2$) |
|---|---|---|---|---|---|
| 15 | 152 | 24 | SIL | | |

MORE ↓

| ENTER Vandose zone SCS soil type (Lookup Soil Parameters) | ENTER Vadose zone soil dry bulk density, $\rho_b^A$ ($g/cm^3$) | ENTER Vadose zone soil total porosity, $n^V$ (unitless) | ENTER Vadose zone soil water-filled porosity, $\theta_w^V$ ($cm^3/cm^3$) | ENTER Average vapor flow rate into bldg. (Leave blank to calculate) $Q_{soil}$ (L/m) |
|---|---|---|---|---|
| SIL | 1.49 | 0.439 | 0.18 | 5 |

MORE ↓

Lookup Receptor Parameters

| | ENTER Averaging time for carcinogens, $AT_C$ (yrs) | ENTER Averaging time for noncarcinogens, $AT_{NC}$ (yrs) | ENTER Exposure duration, ED (yrs) | ENTER Exposure frequency, EF (days/yr) | ENTER Exposure Time ET (hrs/day) | ENTER Air Exchange Rate ACH $(hour)^{-1}$ |
|---|---|---|---|---|---|---|
| NEW=> Commercial | 70 | 25 | 25 | 250 | 8 | 1 |
| | | | | | (NEW) | (NEW) |

END

**Chloroform**

| Diffusivity in air, $D_a$ ($cm^2/s$) | Diffusivity in water, $D_w$ ($cm^2/s$) | Henry's law constant at reference temperature, H (atm-$m^3$/mol) | Henry's law constant reference temperature, $T_R$ ($^oC$) | Enthalpy of vaporization at the normal boiling point, $\Delta H_{v,b}$ (cal/mol) | Normal boiling point, $T_B$ ($^oK$) | Critical temperature, $T_C$ ($^oK$) | Unit risk factor, URF ($\mu g/m^3)^{-1}$ | Reference conc., RfC ($mg/m^3$) | Molecular weight, MW (g/mol) |
|---|---|---|---|---|---|---|---|---|---|
| 7.69E-02 | 1.09E-05 | 3.67E-03 | 25 | 6,988 | 334.32 | 536.40 | 2.3E-05 | 9.8E-02 | 119.38 |

**END**

INTERMEDIATE CALCULATIONS SHEET

**Scenario:** **Commercial**

**Chemical:** **Chloroform**

| Source-building separation, $L_T$ (cm) | Vadose zone soil air-filled porosity, $\theta_a^V$ ($cm^3/cm^3$) | Vadose zone effective total fluid saturation, $S_{te}$ ($cm^3/cm^3$) | Vadose zone soil intrinsic permeability, $k_i$ ($cm^2$) | Vadose zone soil relative air permeability, $k_{rg}$ ($cm^2$) | Vadose zone soil effective vapor permeability, $k_v$ ($cm^2$) | Floor-wall seam perimeter, $X_{crack}$ (cm) | Soil gas conc. ($\mu g/m^3$) | Bldg. ventilation rate, $Q_{building}$ ($cm^3/s$) |
|---|---|---|---|---|---|---|---|---|
| 137 | 0.259 | 0.307 | 2.89E-09 | 0.798 | 2.30E-09 | 4,000 | 2.40E+02 | 6.78E+04 |

| Area of enclosed space below grade, $A_B$ ($cm^2$) | Crack-to-total area ratio, $\eta$ (unitless) | Crack depth below grade, $Z_{crack}$ (cm) | Enthalpy of vaporization at ave. soil temperature, $\Delta H_{v,TS}$ (cal/mol) | Henry's law constant at ave. soil temperature, $H_{TS}$ (atm-$m^3$/mol) | Henry's law constant at ave. soil temperature, $H'_{TS}$ (unitless) | Vapor viscosity at ave. soil temperature, $\mu_{TS}$ (g/cm-s) | Vadose zone effective diffusion coefficient, $D^{eff}_V$ ($cm^2/s$) | Diffusion path length, $L_d$ (cm) |
|---|---|---|---|---|---|---|---|---|
| 1.00E+06 | 5.00E-03 | 15 | 7,407 | 3.52E-03 | 1.44E-01 | 1.80E-04 | 4.44E-03 | 137 |

| Convection path length, $L_p$ (cm) | Source vapor conc., $C_{source}$ ($\mu g/m^3$) | Crack radius, $r_{crack}$ (cm) | Average vapor flow rate into bldg., $Q_{soil}$ ($cm^3/s$) | Crack effective diffusion coefficient, $D^{crack}$ ($cm^2/s$) | Area of crack, $A_{crack}$ ($cm^2$) | Exponent of equivalent foundation Peclet number, $exp(Pe^f)$ (unitless) | Infinite source indoor attenuation coefficient, $\alpha$ (unitless) | Infinite source bldg. conc., $C_{building}$ ($\mu g/m^3$) |
|---|---|---|---|---|---|---|---|---|
| 15 | 2.40E+02 | 1.25 | 8.33E+01 | 4.44E-03 | 5.00E+03 | 1.98E+16 | **3.44E-04** | 8.26E-02 |

| Unit risk factor, URF $(\mu g/m^3)^{-1}$ | Reference conc., RfC ($mg/m^3$) |
|---|---|
| 2.3E-05 | 9.8E-02 |

**END**

**Scenario:** **Commercial**
**Chemical:** **Chloroform**

INCREMENTAL RISK CALCULATIONS:

| Incremental risk from vapor intrusion to indoor air, carcinogen (unitless) | Hazard quotient from vapor intrusion to indoor air, noncarcinogen (unitless) |
|---|---|
| **1.5E-07** | **1.9E-04** |

**MESSAGE SUMMARY BELOW:**

**END**

USEPA SG-SCREEN
Version 2.0, 04/2003

DTSC Modification
December 2014

# Department of Toxic Substances Control
# Vapor Intrusion Screening Model - Soil Gas

DATA ENTRY SHEET

**Scenario:** Commercial
**Chemical:** Chloroform

| Results Summary | | | | |
|---|---|---|---|---|
| Soil Gas Conc. ($\mu g/m^3$) | Attenuation Factor (unitless) | Indoor Air Conc. ($\mu g/m^3$) | Cancer Risk | Noncancer Hazard |
| 1.00E+02 | 1.3E-04 | 1.3E-02 | 2.5E-08 | 3.1E-05 |

Reset to Defaults

Soil Gas Concentration Data

| ENTER Chemical CAS No. (numbers only, no dashes) | ENTER Soil gas conc., $C_g$ ($\mu g/m^3$) | OR | ENTER Soil gas conc., $C_g$ (ppmv) | Chemical |
|---|---|---|---|---|
| 67663 | 1.00E+02 | | | Chloroform |

MORE ↓

| ENTER Depth below grade to bottom of enclosed space floor, $L_F$ (15 or 200 cm) | ENTER Soil gas sampling depth below grade, $L_s$ (cm) | ENTER Average soil temperature, $T_S$ ($^oC$) | ENTER Vadose zone SCS soil type (used to estimate soil vapor permeability) | OR | ENTER User-defined vadose zone soil vapor permeability, $k_v$ ($cm^2$) |
|---|---|---|---|---|---|
| 15 | 457 | 24 | SIL | | |

MORE ↓

| ENTER Vandose zone SCS soil type (Lookup Soil Parameters) | ENTER Vadose zone soil dry bulk density, $\rho_b^A$ ($g/cm^3$) | ENTER Vadose zone soil total porosity, $n^V$ (unitless) | ENTER Vadose zone soil water-filled porosity, $\theta_w^V$ ($cm^3/cm^3$) | ENTER Average vapor flow rate into bldg. (Leave blank to calculate) $Q_{soil}$ (L/m) |
|---|---|---|---|---|
| SIL | 1.49 | 0.439 | 0.18 | 5 |

MORE ↓

Lookup Receptor Parameters

| | ENTER Averaging time for carcinogens, $AT_C$ (yrs) | ENTER Averaging time for noncarcinogens, $AT_{NC}$ (yrs) | ENTER Exposure duration, ED (yrs) | ENTER Exposure frequency, EF (days/yr) | ENTER Exposure Time ET (hrs/day) | ENTER Air Exchange Rate ACH $(hour)^{-1}$ |
|---|---|---|---|---|---|---|
| NEW=> Commercial | 70 | 25 | 25 | 250 | 8 | 1 |
| | | | | | (NEW) | (NEW) |

END

**Chloroform**

| Diffusivity in air, $D_a$ ($cm^2/s$) | Diffusivity in water, $D_w$ ($cm^2/s$) | Henry's law constant at reference temperature, H (atm-$m^3$/mol) | Henry's law constant reference temperature, $T_R$ ($^oC$) | Enthalpy of vaporization at the normal boiling point, $\Delta H_{v,b}$ (cal/mol) | Normal boiling point, $T_B$ ($^oK$) | Critical temperature, $T_C$ ($^oK$) | Unit risk factor, URF ($\mu g/m^3)^{-1}$ | Reference conc., RfC ($mg/m^3$) | Molecular weight, MW (g/mol) |
|---|---|---|---|---|---|---|---|---|---|
| 7.69E-02 | 1.09E-05 | 3.67E-03 | 25 | 6,988 | 334.32 | 536.40 | 2.3E-05 | 9.8E-02 | 119.38 |

**END**

INTERMEDIATE CALCULATIONS SHEET

**Scenario:** **Commercial**

**Chemical:** **Chloroform**

| Source-building separation, $L_T$ (cm) | Vadose zone soil air-filled porosity, $\theta_a^V$ ($cm^3/cm^3$) | Vadose zone effective total fluid saturation, $S_{te}$ ($cm^3/cm^3$) | Vadose zone soil intrinsic permeability, $k_i$ ($cm^2$) | Vadose zone soil relative air permeability, $k_{rg}$ ($cm^2$) | Vadose zone soil effective vapor permeability, $k_v$ ($cm^2$) | Floor-wall seam perimeter, $X_{crack}$ (cm) | Soil gas conc. ($\mu g/m^3$) | Bldg. ventilation rate, $Q_{building}$ ($cm^3/s$) |
|---|---|---|---|---|---|---|---|---|
| 442 | 0.259 | 0.307 | 2.89E-09 | 0.798 | 2.30E-09 | 4,000 | 1.00E+02 | 6.78E+04 |

| Area of enclosed space below grade, $A_B$ ($cm^2$) | Crack-to-total area ratio, $\eta$ (unitless) | Crack depth below grade, $Z_{crack}$ (cm) | Enthalpy of vaporization at ave. soil temperature, $\Delta H_{v,TS}$ (cal/mol) | Henry's law constant at ave. soil temperature, $H_{TS}$ (atm-$m^3$/mol) | Henry's law constant at ave. soil temperature, $H'_{TS}$ (unitless) | Vapor viscosity at ave. soil temperature, $\mu_{TS}$ (g/cm-s) | Vadose zone effective diffusion coefficient, $D^{eff}_V$ ($cm^2/s$) | Diffusion path length, $L_d$ (cm) |
|---|---|---|---|---|---|---|---|---|
| 1.00E+06 | 5.00E-03 | 15 | 7,407 | 3.52E-03 | 1.44E-01 | 1.80E-04 | 4.44E-03 | 442 |

| Convection path length, $L_p$ (cm) | Source vapor conc., $C_{source}$ ($\mu g/m^3$) | Crack radius, $r_{crack}$ (cm) | Average vapor flow rate into bldg., $Q_{soil}$ ($cm^3/s$) | Crack effective diffusion coefficient, $D^{crack}$ ($cm^2/s$) | Area of crack, $A_{crack}$ ($cm^2$) | Exponent of equivalent foundation Peclet number, $exp(Pe^f)$ (unitless) | Infinite source indoor attenuation coefficient, $\alpha$ (unitless) | Infinite source bldg. conc., $C_{building}$ ($\mu g/m^3$) |
|---|---|---|---|---|---|---|---|---|
| 15 | 1.00E+02 | 1.25 | 8.33E+01 | 4.44E-03 | 5.00E+03 | 1.98E+16 | **1.32E-04** | 1.32E-02 |

| Unit risk factor, URF $(\mu g/m^3)^{-1}$ | Reference conc., RfC ($mg/m^3$) |
|---|---|
| 2.3E-05 | 9.8E-02 |

**END**

RESULTS SHEET

**Scenario:** **Commercial**
**Chemical:** **Chloroform**

INCREMENTAL RISK CALCULATIONS:

| Incremental risk from vapor intrusion to indoor air, carcinogen (unitless) | Hazard quotient from vapor intrusion to indoor air, noncarcinogen (unitless) |
|---|---|
| **2.5E-08** | **3.1E-05** |

**MESSAGE SUMMARY BELOW:**

**END**

USEPA SG-SCREEN
Version 2.0, 04/2003

DTSC Modification
December 2014

# Department of Toxic Substances Control
# Vapor Intrusion Screening Model - Soil Gas

DATA ENTRY SHEET

**Scenario:** Residential
**Chemical:** Chloroform

| Results Summary | | | | |
|---|---|---|---|---|
| Soil Gas Conc. ($\mu g/m^3$) | Attenuation Factor (unitless) | Indoor Air Conc. ($\mu g/m^3$) | Cancer Risk | Noncancer Hazard |
| 2.80E+01 | 3.5E-04 | 9.8E-03 | 8.1E-08 | 9.6E-05 |

Reset to Defaults

Soil Gas Concentration Data

| ENTER Chemical CAS No. (numbers only, no dashes) | ENTER Soil gas conc., $C_g$ ($\mu g/m^3$) | OR | ENTER Soil gas conc., $C_g$ (ppmv) | Chemical |
|---|---|---|---|---|
| 67663 | 2.80E+01 | | | Chloroform |

MORE ↓

| ENTER Depth below grade to bottom of enclosed space floor, $L_F$ (15 or 200 cm) | ENTER Soil gas sampling depth below grade, $L_s$ (cm) | ENTER Average soil temperature, $T_S$ ($^oC$) | ENTER Vadose zone SCS soil type (used to estimate soil vapor permeability) | OR | ENTER User-defined vadose zone soil vapor permeability, $k_v$ ($cm^2$) |
|---|---|---|---|---|---|
| 15 | 335 | 24 | SIL | | |

MORE ↓

| ENTER Vandose zone SCS soil type (Lookup Soil Parameters) | ENTER Vadose zone soil dry bulk density, $\rho_b^A$ ($g/cm^3$) | ENTER Vadose zone soil total porosity, $n^V$ (unitless) | ENTER Vadose zone soil water-filled porosity, $\theta_w^V$ ($cm^3/cm^3$) | ENTER Average vapor flow rate into bldg. (Leave blank to calculate) $Q_{soil}$ (L/m) |
|---|---|---|---|---|
| SIL | 1.49 | 0.439 | 0.18 | 5 |

MORE ↓

Lookup Receptor Parameters

| | ENTER Averaging time for carcinogens, $AT_C$ (yrs) | ENTER Averaging time for noncarcinogens, $AT_{NC}$ (yrs) | ENTER Exposure duration, ED (yrs) | ENTER Exposure frequency, EF (days/yr) | ENTER Exposure Time ET (hrs/day) | ENTER Air Exchange Rate ACH $(hour)^{-1}$ |
|---|---|---|---|---|---|---|
| NEW=> Residential | 70 | 26 | 26 | 350 | 24 (NEW) | 0.5 (NEW) |

END

**Chloroform**

| Diffusivity in air, $D_a$ ($cm^2/s$) | Diffusivity in water, $D_w$ ($cm^2/s$) | Henry's law constant at reference temperature, H (atm-$m^3$/mol) | Henry's law constant reference temperature, $T_R$ ($^oC$) | Enthalpy of vaporization at the normal boiling point, $\Delta H_{v,b}$ (cal/mol) | Normal boiling point, $T_B$ ($^oK$) | Critical temperature, $T_C$ ($^oK$) | Unit risk factor, URF ($\mu g/m^3)^{-1}$ | Reference conc., RfC ($mg/m^3$) | Molecular weight, MW (g/mol) |
|---|---|---|---|---|---|---|---|---|---|
| 7.69E-02 | 1.09E-05 | 3.67E-03 | 25 | 6,988 | 334.32 | 536.40 | 2.3E-05 | 9.8E-02 | 119.38 |

**END**

INTERMEDIATE CALCULATIONS SHEET

**Scenario:** **Residential**

**Chemical:** **Chloroform**

| Source-building separation, $L_T$ (cm) | Vadose zone soil air-filled porosity, $\theta_a^V$ ($cm^3/cm^3$) | Vadose zone effective total fluid saturation, $S_{te}$ ($cm^3/cm^3$) | Vadose zone soil intrinsic permeability, $k_i$ ($cm^2$) | Vadose zone soil relative air permeability, $k_{rg}$ ($cm^2$) | Vadose zone soil effective vapor permeability, $k_v$ ($cm^2$) | Floor-wall seam perimeter, $X_{crack}$ (cm) | Soil gas conc. ($\mu g/m^3$) | Bldg. ventilation rate, $Q_{building}$ ($cm^3/s$) |
|---|---|---|---|---|---|---|---|---|
| 320 | 0.259 | 0.307 | 2.89E-09 | 0.798 | 2.30E-09 | 4,000 | 2.80E+01 | 3.39E+04 |

| Area of enclosed space below grade, $A_B$ ($cm^2$) | Crack-to-total area ratio, $\eta$ (unitless) | Crack depth below grade, $Z_{crack}$ (cm) | Enthalpy of vaporization at ave. soil temperature, $\Delta H_{v,TS}$ (cal/mol) | Henry's law constant at ave. soil temperature, $H_{TS}$ (atm-$m^3$/mol) | Henry's law constant at ave. soil temperature, $H'_{TS}$ (unitless) | Vapor viscosity at ave. soil temperature, $\mu_{TS}$ (g/cm-s) | Vadose zone effective diffusion coefficient, $D^{eff}_V$ ($cm^2/s$) | Diffusion path length, $L_d$ (cm) |
|---|---|---|---|---|---|---|---|---|
| 1.00E+06 | 5.00E-03 | 15 | 7,407 | 3.52E-03 | 1.44E-01 | 1.80E-04 | 4.44E-03 | 320 |

| Convection path length, $L_p$ (cm) | Source vapor conc., $C_{source}$ ($\mu g/m^3$) | Crack radius, $r_{crack}$ (cm) | Average vapor flow rate into bldg., $Q_{soil}$ ($cm^3/s$) | Crack effective diffusion coefficient, $D^{crack}$ ($cm^2/s$) | Area of crack, $A_{crack}$ ($cm^2$) | Exponent of equivalent foundation Peclet number, $exp(Pe^f)$ (unitless) | Infinite source indoor attenuation coefficient, $\alpha$ (unitless) | Infinite source bldg. conc., $C_{building}$ ($\mu g/m^3$) |
|---|---|---|---|---|---|---|---|---|
| 15 | 2.80E+01 | 1.25 | 8.33E+01 | 4.44E-03 | 5.00E+03 | 1.98E+16 | **3.51E-04** | 9.83E-03 |

| Unit risk factor, URF $(\mu g/m^3)^{-1}$ | Reference conc., RfC ($mg/m^3$) |
|---|---|
| 2.3E-05 | 9.8E-02 |

**END**

**Scenario:** **Residential**
**Chemical:** **Chloroform**

INCREMENTAL RISK CALCULATIONS:

| Incremental risk from vapor intrusion to indoor air, carcinogen (unitless) | Hazard quotient from vapor intrusion to indoor air, noncarcinogen (unitless) |
|---|---|
| **8.1E-08** | **9.6E-05** |

**MESSAGE SUMMARY BELOW:**

**END**

USEPA SG-SCREEN
Version 2.0, 04/2003

DTSC Modification
December 2014

# Department of Toxic Substances Control
# Vapor Intrusion Screening Model - Soil Gas

DATA ENTRY SHEET

**Scenario:** Commercial
**Chemical:** Chloroform

| Results Summary | | | | |
|---|---|---|---|---|
| Soil Gas Conc. ($\mu g/m^3$) | Attenuation Factor (unitless) | Indoor Air Conc. ($\mu g/m^3$) | Cancer Risk | Noncancer Hazard |
| 2.80E+01 | 1.8E-04 | 4.9E-03 | 9.2E-09 | 1.1E-05 |

Reset to Defaults

Soil Gas Concentration Data

| ENTER Chemical CAS No. (numbers only, no dashes) | ENTER Soil gas conc., $C_g$ ($\mu g/m^3$) | OR | ENTER Soil gas conc., $C_g$ (ppmv) | Chemical |
|---|---|---|---|---|
| 67663 | 2.80E+01 | | | Chloroform |

MORE ↓

| ENTER Depth below grade to bottom of enclosed space floor, $L_F$ (15 or 200 cm) | ENTER Soil gas sampling depth below grade, $L_s$ (cm) | ENTER Average soil temperature, $T_S$ ($^oC$) | ENTER Vadose zone SCS soil type (used to estimate soil vapor permeability) | OR | ENTER User-defined vadose zone soil vapor permeability, $k_v$ ($cm^2$) |
|---|---|---|---|---|---|
| 15 | 335 | 24 | SIL | | |

MORE ↓

| ENTER Vandose zone SCS soil type (Lookup Soil Parameters) | ENTER Vadose zone soil dry bulk density, $\rho_b^A$ ($g/cm^3$) | ENTER Vadose zone soil total porosity, $n^V$ (unitless) | ENTER Vadose zone soil water-filled porosity, $\theta_w^V$ ($cm^3/cm^3$) | ENTER Average vapor flow rate into bldg. (Leave blank to calculate) $Q_{soil}$ (L/m) |
|---|---|---|---|---|
| SIL | 1.49 | 0.439 | 0.18 | 5 |

MORE ↓

Lookup Receptor Parameters

| | ENTER Averaging time for carcinogens, $AT_C$ (yrs) | ENTER Averaging time for noncarcinogens, $AT_{NC}$ (yrs) | ENTER Exposure duration, ED (yrs) | ENTER Exposure frequency, EF (days/yr) | ENTER Exposure Time ET (hrs/day) | ENTER Air Exchange Rate ACH $(hour)^{-1}$ |
|---|---|---|---|---|---|---|
| NEW=> Commercial | 70 | 25 | 25 | 250 | 8 | 1 |
| | | | | | (NEW) | (NEW) |

END

**Chloroform**

| Diffusivity in air, $D_a$ ($cm^2/s$) | Diffusivity in water, $D_w$ ($cm^2/s$) | Henry's law constant at reference temperature, H (atm-$m^3$/mol) | Henry's law constant reference temperature, $T_R$ ($^oC$) | Enthalpy of vaporization at the normal boiling point, $\Delta H_{v,b}$ (cal/mol) | Normal boiling point, $T_B$ ($^oK$) | Critical temperature, $T_C$ ($^oK$) | Unit risk factor, URF ($\mu g/m^3)^{-1}$ | Reference conc., RfC ($mg/m^3$) | Molecular weight, MW (g/mol) |
|---|---|---|---|---|---|---|---|---|---|
| 7.69E-02 | 1.09E-05 | 3.67E-03 | 25 | 6,988 | 334.32 | 536.40 | 2.3E-05 | 9.8E-02 | 119.38 |

**END**

INTERMEDIATE CALCULATIONS SHEET

**Scenario:** **Commercial**

**Chemical:** **Chloroform**

| Source-building separation, $L_T$ (cm) | Vadose zone soil air-filled porosity, $\theta_a^V$ ($cm^3/cm^3$) | Vadose zone effective total fluid saturation, $S_{te}$ ($cm^3/cm^3$) | Vadose zone soil intrinsic permeability, $k_i$ ($cm^2$) | Vadose zone soil relative air permeability, $k_{rg}$ ($cm^2$) | Vadose zone soil effective vapor permeability, $k_v$ ($cm^2$) | Floor-wall seam perimeter, $X_{crack}$ (cm) | Soil gas conc. ($\mu g/m^3$) | Bldg. ventilation rate, $Q_{building}$ ($cm^3/s$) |
|---|---|---|---|---|---|---|---|---|
| 320 | 0.259 | 0.307 | 2.89E-09 | 0.798 | 2.30E-09 | 4,000 | 2.80E+01 | 6.78E+04 |

| Area of enclosed space below grade, $A_B$ ($cm^2$) | Crack-to-total area ratio, $\eta$ (unitless) | Crack depth below grade, $Z_{crack}$ (cm) | Enthalpy of vaporization at ave. soil temperature, $\Delta H_{v,TS}$ (cal/mol) | Henry's law constant at ave. soil temperature, $H_{TS}$ (atm-$m^3$/mol) | Henry's law constant at ave. soil temperature, $H'_{TS}$ (unitless) | Vapor viscosity at ave. soil temperature, $\mu_{TS}$ (g/cm-s) | Vadose zone effective diffusion coefficient, $D^{eff}_V$ ($cm^2/s$) | Diffusion path length, $L_d$ (cm) |
|---|---|---|---|---|---|---|---|---|
| 1.00E+06 | 5.00E-03 | 15 | 7,407 | 3.52E-03 | 1.44E-01 | 1.80E-04 | 4.44E-03 | 320 |

| Convection path length, $L_p$ (cm) | Source vapor conc., $C_{source}$ ($\mu g/m^3$) | Crack radius, $r_{crack}$ (cm) | Average vapor flow rate into bldg., $Q_{soil}$ ($cm^3/s$) | Crack effective diffusion coefficient, $D^{crack}$ ($cm^2/s$) | Area of crack, $A_{crack}$ ($cm^2$) | Exponent of equivalent foundation Peclet number, $exp(Pe^f)$ (unitless) | Infinite source indoor attenuation coefficient, $\alpha$ (unitless) | Infinite source bldg. conc., $C_{building}$ ($\mu g/m^3$) |
|---|---|---|---|---|---|---|---|---|
| 15 | 2.80E+01 | 1.25 | 8.33E+01 | 4.44E-03 | 5.00E+03 | 1.98E+16 | **1.76E-04** | 4.92E-03 |

| Unit risk factor, URF $(\mu g/m^3)^{-1}$ | Reference conc., RfC ($mg/m^3$) |
|---|---|
| 2.3E-05 | 9.8E-02 |

**END**

RESULTS SHEET

**Scenario:** **Commercial**
**Chemical:** **Chloroform**

INCREMENTAL RISK CALCULATIONS:

| Incremental risk from vapor intrusion to indoor air, carcinogen (unitless) | Hazard quotient from vapor intrusion to indoor air, noncarcinogen (unitless) |
|---|---|
| **9.2E-09** | **1.1E-05** |

**MESSAGE SUMMARY BELOW:**

**END**

USEPA SG-SCREEN
Version 2.0, 04/2003

DTSC Modification
December 2014

# Department of Toxic Substances Control
# Vapor Intrusion Screening Model - Soil Gas

DATA ENTRY SHEET

**Scenario:** Residential
**Chemical:** Methylethylketone (2-butanone)

## Results Summary

| Soil Gas Conc. ($\mu g/m^3$) | Attenuation Factor (unitless) | Indoor Air Conc. ($\mu g/m^3$) | Cancer Risk | Noncancer Hazard |
|---|---|---|---|---|
| 2.70E+01 | 1.6E-04 | 4.4E-03 | NA | 8.5E-07 |

Reset to Defaults

Soil Gas Concentration Data

| ENTER Chemical CAS No. (numbers only, no dashes) | ENTER Soil gas conc., $C_g$ ($\mu g/m^3$) | OR | ENTER Soil gas conc., $C_g$ (ppmv) | Chemical |
|---|---|---|---|---|
| 78933 | 2.70E+01 | | | Methylethylketone (2-butanone) |

MORE ↓

| ENTER Depth below grade to bottom of enclosed space floor, $L_F$ (15 or 200 cm) | ENTER Soil gas sampling depth below grade, $L_s$ (cm) | ENTER Average soil temperature, $T_S$ ($^oC$) | ENTER Vadose zone SCS soil type (used to estimate soil vapor permeability) | OR | ENTER User-defined vadose zone soil vapor permeability, $k_v$ ($cm^2$) |
|---|---|---|---|---|---|
| 15 | 914 | 24 | SIL | | |

MORE ↓

| ENTER Vandose zone SCS soil type (Lookup Soil Parameters) | ENTER Vadose zone soil dry bulk density, $\rho_b^A$ ($g/cm^3$) | ENTER Vadose zone soil total porosity, $n^V$ (unitless) | ENTER Vadose zone soil water-filled porosity, $\theta_w^V$ ($cm^3/cm^3$) | ENTER Average vapor flow rate into bldg. (Leave blank to calculate) $Q_{soil}$ (L/m) |
|---|---|---|---|---|
| SIL | 1.49 | 0.439 | 0.18 | 5 |

MORE ↓

Lookup Receptor Parameters

| | ENTER Averaging time for carcinogens, $AT_C$ (yrs) | ENTER Averaging time for noncarcinogens, $AT_{NC}$ (yrs) | ENTER Exposure duration, ED (yrs) | ENTER Exposure frequency, EF (days/yr) | ENTER Exposure Time ET (hrs/day) | ENTER Air Exchange Rate ACH $(hour)^{-1}$ |
|---|---|---|---|---|---|---|
| NEW=> Residential | 70 | 26 | 26 | 350 | 24 | 0.5 |
| | | | | | (NEW) | (NEW) |

END

## Methylethylketone (2-butanone)

| Diffusivity in air, $D_a$ ($cm^2/s$) | Diffusivity in water, $D_w$ ($cm^2/s$) | Henry's law constant at reference temperature, H (atm-$m^3$/mol) | Henry's law constant reference temperature, $T_R$ ($^oC$) | Enthalpy of vaporization at the normal boiling point, $\Delta H_{v,b}$ (cal/mol) | Normal boiling point, $T_B$ ($^oK$) | Critical temperature, $T_C$ ($^oK$) | Unit risk factor, URF ($\mu g/m^3)^{-1}$ | Reference conc., RfC ($mg/m^3$) | Molecular weight, MW (g/mol) |
|---|---|---|---|---|---|---|---|---|---|
| 9.14E-02 | 1.02E-05 | 5.69E-05 | 25 | 7,481 | 352.50 | 536.78 | 0.0E+00 | 5.0E+00 | 72.11 |

**END**

**Scenario:** **Residential**

**Chemical:** **Methylethylketone (2-butanone)**

| Source-building separation, $L_T$ (cm) | Vadose zone soil air-filled porosity, $\theta_a^V$ ($cm^3/cm^3$) | Vadose zone effective total fluid saturation, $S_{te}$ ($cm^3/cm^3$) | Vadose zone soil intrinsic permeability, $k_i$ ($cm^2$) | Vadose zone soil relative air permeability, $k_{rg}$ ($cm^2$) | Vadose zone soil effective vapor permeability, $k_v$ ($cm^2$) | Floor-wall seam perimeter, $X_{crack}$ (cm) | Soil gas conc. ($\mu g/m^3$) | Bldg. ventilation rate, $Q_{building}$ ($cm^3/s$) |
|---|---|---|---|---|---|---|---|---|
| 899 | 0.259 | 0.307 | 2.89E-09 | 0.798 | 2.30E-09 | 4,000 | 2.70E+01 | 3.39E+04 |

| Area of enclosed space below grade, $A_B$ ($cm^2$) | Crack-to-total area ratio, $\eta$ (unitless) | Crack depth below grade, $Z_{crack}$ (cm) | Enthalpy of vaporization at ave. soil temperature, $\Delta H_{v,TS}$ (cal/mol) | Henry's law constant at ave. soil temperature, $H_{TS}$ (atm-$m^3$/mol) | Henry's law constant at ave. soil temperature, $H'_{TS}$ (unitless) | Vapor viscosity at ave. soil temperature, $\mu_{TS}$ (g/cm-s) | Vadose zone effective diffusion coefficient, $D^{eff}_V$ ($cm^2/s$) | Diffusion path length, $L_d$ (cm) |
|---|---|---|---|---|---|---|---|---|
| 1.00E+06 | 5.00E-03 | 15 | 8,244 | 5.43E-05 | 2.23E-03 | 1.80E-04 | 5.36E-03 | 899 |

| Convection path length, $L_p$ (cm) | Source vapor conc., $C_{source}$ ($\mu g/m^3$) | Crack radius, $r_{crack}$ (cm) | Average vapor flow rate into bldg., $Q_{soil}$ ($cm^3/s$) | Crack effective diffusion coefficient, $D^{crack}$ ($cm^2/s$) | Area of crack, $A_{crack}$ ($cm^2$) | Exponent of equivalent foundation Peclet number, $exp(Pe^f)$ (unitless) | Infinite source indoor attenuation coefficient, $\alpha$ (unitless) | Infinite source bldg. conc., $C_{building}$ ($\mu g/m^3$) |
|---|---|---|---|---|---|---|---|---|
| 15 | 2.70E+01 | 1.25 | 8.33E+01 | 5.36E-03 | 5.00E+03 | 3.24E+13 | **1.64E-04** | 4.43E-03 |

| Unit risk factor, URF $(\mu g/m^3)^{-1}$ | Reference conc., RfC ($mg/m^3$) |
|---|---|
| NA | 5.0E+00 |

**END**

**Scenario:** **Residential**
**Chemical:** **Methylethylketone (2-butanone)**

INCREMENTAL RISK CALCULATIONS:

| Incremental risk from vapor intrusion to indoor air, carcinogen (unitless) | Hazard quotient from vapor intrusion to indoor air, noncarcinogen (unitless) |
|---|---|
| **NA** | **8.5E-07** |

**MESSAGE SUMMARY BELOW:**

**END**

USEPA SG-SCREEN
Version 2.0, 04/2003

DTSC Modification
December 2014

# Department of Toxic Substances Control
# Vapor Intrusion Screening Model - Soil Gas

DATA ENTRY SHEET

**Scenario:** Commercial
**Chemical:** Methylethylketone (2-butanone)

| Results Summary | | | | |
|---|---|---|---|---|
| Soil Gas Conc. ($\mu g/m^3$) | Attenuation Factor (unitless) | Indoor Air Conc. ($\mu g/m^3$) | Cancer Risk | Noncancer Hazard |
| 2.70E+01 | 8.2E-05 | 2.2E-03 | NA | 1.0E-07 |

Reset to Defaults

Soil Gas Concentration Data

| ENTER Chemical CAS No. (numbers only, no dashes) | ENTER Soil gas conc., $C_g$ ($\mu g/m^3$) | OR | ENTER Soil gas conc., $C_g$ (ppmv) | Chemical |
|---|---|---|---|---|
| 78933 | 2.70E+01 | | | Methylethylketone (2-butanone) |

MORE ↓

| ENTER Depth below grade to bottom of enclosed space floor, $L_F$ (15 or 200 cm) | ENTER Soil gas sampling depth below grade, $L_s$ (cm) | ENTER Average soil temperature, $T_S$ ($^oC$) | ENTER Vadose zone SCS soil type (used to estimate soil vapor permeability) | OR | ENTER User-defined vadose zone soil vapor permeability, $k_v$ ($cm^2$) |
|---|---|---|---|---|---|
| 15 | 914 | 24 | SIL | | |

MORE ↓

| ENTER Vandose zone SCS soil type (Lookup Soil Parameters) | ENTER Vadose zone soil dry bulk density, $\rho_b^A$ ($g/cm^3$) | ENTER Vadose zone soil total porosity, $n^V$ (unitless) | ENTER Vadose zone soil water-filled porosity, $\theta_w^V$ ($cm^3/cm^3$) | ENTER Average vapor flow rate into bldg. (Leave blank to calculate) $Q_{soil}$ (L/m) |
|---|---|---|---|---|
| SIL | 1.49 | 0.439 | 0.18 | 5 |

MORE ↓

Lookup Receptor Parameters

| | ENTER Averaging time for carcinogens, $AT_C$ (yrs) | ENTER Averaging time for noncarcinogens, $AT_{NC}$ (yrs) | ENTER Exposure duration, ED (yrs) | ENTER Exposure frequency, EF (days/yr) | ENTER Exposure Time ET (hrs/day) | ENTER Air Exchange Rate ACH $(hour)^{-1}$ |
|---|---|---|---|---|---|---|
| NEW=> Commercial | 70 | 25 | 25 | 250 | 8 | 1 |
| | | | | | (NEW) | (NEW) |

END

## Methylethylketone (2-butanone)

| Diffusivity in air, $D_a$ ($cm^2/s$) | Diffusivity in water, $D_w$ ($cm^2/s$) | Henry's law constant at reference temperature, H (atm-$m^3$/mol) | Henry's law constant reference temperature, $T_R$ ($^oC$) | Enthalpy of vaporization at the normal boiling point, $\Delta H_{v,b}$ (cal/mol) | Normal boiling point, $T_B$ ($^oK$) | Critical temperature, $T_C$ ($^oK$) | Unit risk factor, URF ($\mu g/m^3)^{-1}$ | Reference conc., RfC ($mg/m^3$) | Molecular weight, MW (g/mol) |
|---|---|---|---|---|---|---|---|---|---|
| 9.14E-02 | 1.02E-05 | 5.69E-05 | 25 | 7,481 | 352.50 | 536.78 | 0.0E+00 | 5.0E+00 | 72.11 |

**END**

**Scenario:** **Commercial**

**Chemical:** **Methylethylketone (2-butanone)**

| Source-building separation, $L_T$ (cm) | Vadose zone soil air-filled porosity, $\theta_a^V$ ($cm^3/cm^3$) | Vadose zone effective total fluid saturation, $S_{te}$ ($cm^3/cm^3$) | Vadose zone soil intrinsic permeability, $k_i$ ($cm^2$) | Vadose zone soil relative air permeability, $k_{rg}$ ($cm^2$) | Vadose zone soil effective vapor permeability, $k_v$ ($cm^2$) | Floor-wall seam perimeter, $X_{crack}$ (cm) | Soil gas conc. ($\mu g/m^3$) | Bldg. ventilation rate, $Q_{building}$ ($cm^3/s$) |
|---|---|---|---|---|---|---|---|---|
| 899 | 0.259 | 0.307 | 2.89E-09 | 0.798 | 2.30E-09 | 4,000 | 2.70E+01 | 6.78E+04 |

| Area of enclosed space below grade, $A_B$ ($cm^2$) | Crack-to-total area ratio, $\eta$ (unitless) | Crack depth below grade, $Z_{crack}$ (cm) | Enthalpy of vaporization at ave. soil temperature, $\Delta H_{v,TS}$ (cal/mol) | Henry's law constant at ave. soil temperature, $H_{TS}$ (atm-$m^3$/mol) | Henry's law constant at ave. soil temperature, $H'_{TS}$ (unitless) | Vapor viscosity at ave. soil temperature, $\mu_{TS}$ (g/cm-s) | Vadose zone effective diffusion coefficient, $D^{eff}_V$ ($cm^2/s$) | Diffusion path length, $L_d$ (cm) |
|---|---|---|---|---|---|---|---|---|
| 1.00E+06 | 5.00E-03 | 15 | 8,244 | 5.43E-05 | 2.23E-03 | 1.80E-04 | 5.36E-03 | 899 |

| Convection path length, $L_p$ (cm) | Source vapor conc., $C_{source}$ ($\mu g/m^3$) | Crack radius, $r_{crack}$ (cm) | Average vapor flow rate into bldg., $Q_{soil}$ ($cm^3/s$) | Crack effective diffusion coefficient, $D^{crack}$ ($cm^2/s$) | Area of crack, $A_{crack}$ ($cm^2$) | Exponent of equivalent foundation Peclet number, $exp(Pe^f)$ (unitless) | Infinite source indoor attenuation coefficient, $\alpha$ (unitless) | Infinite source bldg. conc., $C_{building}$ ($\mu g/m^3$) |
|---|---|---|---|---|---|---|---|---|
| 15 | 2.70E+01 | 1.25 | 8.33E+01 | 5.36E-03 | 5.00E+03 | 3.24E+13 | **8.21E-05** | 2.22E-03 |

| Unit risk factor, URF $(\mu g/m^3)^{-1}$ | Reference conc., RfC ($mg/m^3$) |
|---|---|
| NA | 5.0E+00 |

**END**

**Scenario:** **Commercial**
**Chemical:** **Methylethylketone (2-butanone)**

INCREMENTAL RISK CALCULATIONS:

| Incremental risk from vapor intrusion to indoor air, carcinogen (unitless) | Hazard quotient from vapor intrusion to indoor air, noncarcinogen (unitless) |
|---|---|
| **NA** | **1.0E-07** |

**MESSAGE SUMMARY BELOW:**

**END**

USEPA SG-SCREEN
Version 2.0, 04/2003

DTSC Modification
December 2014

# Department of Toxic Substances Control
# Vapor Intrusion Screening Model - Soil Gas

DATA ENTRY SHEET

**Scenario:** Residential
**Chemical:** 1,1-Dichloroethylene

**Results Summary**

| Soil Gas Conc. ($\mu g/m^3$) | Attenuation Factor (unitless) | Indoor Air Conc. ($\mu g/m^3$) | Cancer Risk | Noncancer Hazard |
|---|---|---|---|---|
| 2.00E+03 | 1.5E-04 | 3.1E-01 | NA | 4.2E-03 |

Reset to Defaults

Soil Gas Concentration Data

| ENTER Chemical CAS No. (numbers only, no dashes) | ENTER Soil gas conc., $C_g$ ($\mu g/m^3$) | OR | ENTER Soil gas conc., $C_g$ (ppmv) | Chemical |
|---|---|---|---|---|
| 75354 | 2.00E+03 | | | 1,1-Dichloroethylene |

MORE ↓

| ENTER Depth below grade to bottom of enclosed space floor, $L_F$ (15 or 200 cm) | ENTER Soil gas sampling depth below grade, $L_s$ (cm) | ENTER Average soil temperature, $T_S$ ($^oC$) | ENTER Vadose zone SCS soil type (used to estimate soil vapor permeability) | OR | ENTER User-defined vadose zone soil vapor permeability, $k_v$ ($cm^2$) |
|---|---|---|---|---|---|
| 15 | 914 | 24 | SIL | | |

MORE ↓

| ENTER Vandose zone SCS soil type (Lookup Soil Parameters) | ENTER Vadose zone soil dry bulk density, $\rho_b^A$ ($g/cm^3$) | ENTER Vadose zone soil total porosity, $n^V$ (unitless) | ENTER Vadose zone soil water-filled porosity, $\theta_w^V$ ($cm^3/cm^3$) | ENTER Average vapor flow rate into bldg. (Leave blank to calculate) $Q_{soil}$ (L/m) |
|---|---|---|---|---|
| SIL | 1.49 | 0.439 | 0.18 | 5 |

MORE ↓

Lookup Receptor Parameters

| | ENTER Averaging time for carcinogens, $AT_C$ (yrs) | ENTER Averaging time for noncarcinogens, $AT_{NC}$ (yrs) | ENTER Exposure duration, ED (yrs) | ENTER Exposure frequency, EF (days/yr) | ENTER Exposure Time ET (hrs/day) | ENTER Air Exchange Rate ACH $(hour)^{-1}$ |
|---|---|---|---|---|---|---|
| NEW=> Residential | 70 | 26 | 26 | 350 | 24 | 0.5 |
| | | | | | (NEW) | (NEW) |

END

## 1,1-Dichloroethylene

| Diffusivity in air, $D_a$ ($cm^2/s$) | Diffusivity in water, $D_w$ ($cm^2/s$) | Henry's law constant at reference temperature, H (atm-$m^3$/mol) | Henry's law constant reference temperature, $T_R$ ($^oC$) | Enthalpy of vaporization at the normal boiling point, $\Delta H_{v,b}$ (cal/mol) | Normal boiling point, $T_B$ ($^oK$) | Critical temperature, $T_C$ ($^oK$) | Unit risk factor, URF ($\mu g/m^3)^{-1}$ | Reference conc., RfC ($mg/m^3$) | Molecular weight, MW (g/mol) |
|---|---|---|---|---|---|---|---|---|---|
| 8.63E-02 | 1.10E-05 | 2.61E-02 | 25 | 6,247 | 304.75 | 576.05 | 0.0E+00 | 7.0E-02 | 96.94 |

**END**

**Scenario:** **Residential**

**Chemical:** **1,1-Dichloroethylene**

| Source-building separation, $L_T$ (cm) | Vadose zone soil air-filled porosity, $\theta_a^V$ ($cm^3/cm^3$) | Vadose zone effective total fluid saturation, $S_{te}$ ($cm^3/cm^3$) | Vadose zone soil intrinsic permeability, $k_i$ ($cm^2$) | Vadose zone soil relative air permeability, $k_{rg}$ ($cm^2$) | Vadose zone soil effective vapor permeability, $k_v$ ($cm^2$) | Floor-wall seam perimeter, $X_{crack}$ (cm) | Soil gas conc. ($\mu g/m^3$) | Bldg. ventilation rate, $Q_{building}$ ($cm^3/s$) |
|---|---|---|---|---|---|---|---|---|
| 899 | 0.259 | 0.307 | 2.89E-09 | 0.798 | 2.30E-09 | 4,000 | 2.00E+03 | 3.39E+04 |

| Area of enclosed space below grade, $A_B$ ($cm^2$) | Crack-to-total area ratio, $\eta$ (unitless) | Crack depth below grade, $Z_{crack}$ (cm) | Enthalpy of vaporization at ave. soil temperature, $\Delta H_{v,TS}$ (cal/mol) | Henry's law constant at ave. soil temperature, $H_{TS}$ (atm-$m^3$/mol) | Henry's law constant at ave. soil temperature, $H'_{TS}$ (unitless) | Vapor viscosity at ave. soil temperature, $\mu_{TS}$ (g/cm-s) | Vadose zone effective diffusion coefficient, $D^{eff}_V$ ($cm^2/s$) | Diffusion path length, $L_d$ (cm) |
|---|---|---|---|---|---|---|---|---|
| 1.00E+06 | 5.00E-03 | 15 | 6,299 | 2.52E-02 | 1.03E+00 | 1.80E-04 | 4.98E-03 | 899 |

| Convection path length, $L_p$ (cm) | Source vapor conc., $C_{source}$ ($\mu g/m^3$) | Crack radius, $r_{crack}$ (cm) | Average vapor flow rate into bldg., $Q_{soil}$ ($cm^3/s$) | Crack effective diffusion coefficient, $D^{crack}$ ($cm^2/s$) | Area of crack, $A_{crack}$ ($cm^2$) | Exponent of equivalent foundation Peclet number, $exp(Pe^f)$ (unitless) | Infinite source indoor attenuation coefficient, $\alpha$ (unitless) | Infinite source bldg. conc., $C_{building}$ ($\mu g/m^3$) |
|---|---|---|---|---|---|---|---|---|
| 15 | 2.00E+03 | 1.25 | 8.33E+01 | 4.98E-03 | 5.00E+03 | 3.37E+14 | **1.53E-04** | 3.07E-01 |

| Unit risk factor, URF $(\mu g/m^3)^{-1}$ | Reference conc., RfC ($mg/m^3$) |
|---|---|
| NA | 7.0E-02 |

**END**

**Scenario:** **Residential**
**Chemical:** **1,1-Dichloroethylene**

INCREMENTAL RISK CALCULATIONS:

| Incremental risk from vapor intrusion to indoor air, carcinogen (unitless) | Hazard quotient from vapor intrusion to indoor air, noncarcinogen (unitless) |
|---|---|
| **NA** | **4.2E-03** |

**MESSAGE SUMMARY BELOW:**

**END**

USEPA SG-SCREEN
Version 2.0, 04/2003

DTSC Modification
December 2014

# Department of Toxic Substances Control
# Vapor Intrusion Screening Model - Soil Gas

DATA ENTRY SHEET

**Scenario:** Commercial
**Chemical:** 1,1-Dichloroethylene

**Results Summary**

| Soil Gas Conc. ($\mu g/m^3$) | Attenuation Factor (unitless) | Indoor Air Conc. ($\mu g/m^3$) | Cancer Risk | Noncancer Hazard |
|---|---|---|---|---|
| 2.00E+03 | 7.7E-05 | 1.5E-01 | NA | 5.0E-04 |

Reset to Defaults

Soil Gas Concentration Data

| ENTER Chemical CAS No. (numbers only, no dashes) | ENTER Soil gas conc., $C_g$ ($\mu g/m^3$) | OR | ENTER Soil gas conc., $C_g$ (ppmv) | Chemical |
|---|---|---|---|---|
| 75354 | 2.00E+03 | | | 1,1-Dichloroethylene |

MORE ↓

| ENTER Depth below grade to bottom of enclosed space floor, $L_F$ (15 or 200 cm) | ENTER Soil gas sampling depth below grade, $L_s$ (cm) | ENTER Average soil temperature, $T_S$ ($^oC$) | ENTER Vadose zone SCS soil type (used to estimate soil vapor permeability) | OR | ENTER User-defined vadose zone soil vapor permeability, $k_v$ ($cm^2$) |
|---|---|---|---|---|---|
| 15 | 914 | 24 | SIL | | |

MORE ↓

| ENTER Vandose zone SCS soil type (Lookup Soil Parameters) | ENTER Vadose zone soil dry bulk density, $\rho_b^A$ ($g/cm^3$) | ENTER Vadose zone soil total porosity, $n^V$ (unitless) | ENTER Vadose zone soil water-filled porosity, $\theta_w^V$ ($cm^3/cm^3$) | ENTER Average vapor flow rate into bldg. (Leave blank to calculate) $Q_{soil}$ (L/m) |
|---|---|---|---|---|
| SIL | 1.49 | 0.439 | 0.18 | 5 |

MORE ↓

Lookup Receptor Parameters

| | ENTER Averaging time for carcinogens, $AT_C$ (yrs) | ENTER Averaging time for noncarcinogens, $AT_{NC}$ (yrs) | ENTER Exposure duration, ED (yrs) | ENTER Exposure frequency, EF (days/yr) | ENTER Exposure Time ET (hrs/day) | ENTER Air Exchange Rate ACH $(hour)^{-1}$ |
|---|---|---|---|---|---|---|
| NEW=> Commercial | 70 | 25 | 25 | 250 | 8 | 1 |
| | | | | | (NEW) | (NEW) |

END

## 1,1-Dichloroethylene

| Diffusivity in air, $D_a$ ($cm^2/s$) | Diffusivity in water, $D_w$ ($cm^2/s$) | Henry's law constant at reference temperature, H (atm-$m^3$/mol) | Henry's law constant reference temperature, $T_R$ ($^oC$) | Enthalpy of vaporization at the normal boiling point, $\Delta H_{v,b}$ (cal/mol) | Normal boiling point, $T_B$ ($^oK$) | Critical temperature, $T_C$ ($^oK$) | Unit risk factor, URF ($\mu g/m^3)^{-1}$ | Reference conc., RfC ($mg/m^3$) | Molecular weight, MW (g/mol) |
|---|---|---|---|---|---|---|---|---|---|
| 8.63E-02 | 1.10E-05 | 2.61E-02 | 25 | 6,247 | 304.75 | 576.05 | 0.0E+00 | 7.0E-02 | 96.94 |

**END**

INTERMEDIATE CALCULATIONS SHEET

**Scenario:** **Commercial**

**Chemical:** **1,1-Dichloroethylene**

| Source-building separation, $L_T$ (cm) | Vadose zone soil air-filled porosity, $\theta_a^V$ ($cm^3/cm^3$) | Vadose zone effective total fluid saturation, $S_{te}$ ($cm^3/cm^3$) | Vadose zone soil intrinsic permeability, $k_i$ ($cm^2$) | Vadose zone soil relative air permeability, $k_{rg}$ ($cm^2$) | Vadose zone soil effective vapor permeability, $k_v$ ($cm^2$) | Floor-wall seam perimeter, $X_{crack}$ (cm) | Soil gas conc. ($\mu g/m^3$) | Bldg. ventilation rate, $Q_{building}$ ($cm^3/s$) |
|---|---|---|---|---|---|---|---|---|
| 899 | 0.259 | 0.307 | 2.89E-09 | 0.798 | 2.30E-09 | 4,000 | 2.00E+03 | 6.78E+04 |

| Area of enclosed space below grade, $A_B$ ($cm^2$) | Crack-to-total area ratio, $\eta$ (unitless) | Crack depth below grade, $Z_{crack}$ (cm) | Enthalpy of vaporization at ave. soil temperature, $\Delta H_{v,TS}$ (cal/mol) | Henry's law constant at ave. soil temperature, $H_{TS}$ (atm-$m^3$/mol) | Henry's law constant at ave. soil temperature, $H'_{TS}$ (unitless) | Vapor viscosity at ave. soil temperature, $\mu_{TS}$ (g/cm-s) | Vadose zone effective diffusion coefficient, $D^{eff}_V$ ($cm^2/s$) | Diffusion path length, $L_d$ (cm) |
|---|---|---|---|---|---|---|---|---|
| 1.00E+06 | 5.00E-03 | 15 | 6,299 | 2.52E-02 | 1.03E+00 | 1.80E-04 | 4.98E-03 | 899 |

| Convection path length, $L_p$ (cm) | Source vapor conc., $C_{source}$ ($\mu g/m^3$) | Crack radius, $r_{crack}$ (cm) | Average vapor flow rate into bldg., $Q_{soil}$ ($cm^3/s$) | Crack effective diffusion coefficient, $D^{crack}$ ($cm^2/s$) | Area of crack, $A_{crack}$ ($cm^2$) | Exponent of equivalent foundation Peclet number, $exp(Pe^f)$ (unitless) | Infinite source indoor attenuation coefficient, $\alpha$ (unitless) | Infinite source bldg. conc., $C_{building}$ ($\mu g/m^3$) |
|---|---|---|---|---|---|---|---|---|
| 15 | 2.00E+03 | 1.25 | 8.33E+01 | 4.98E-03 | 5.00E+03 | 3.37E+14 | **7.67E-05** | 1.53E-01 |

| Unit risk factor, URF $(\mu g/m^3)^{-1}$ | Reference conc., RfC ($mg/m^3$) |
|---|---|
| NA | 7.0E-02 |

**END**

**Scenario:** **Commercial**
**Chemical:** **1,1-Dichloroethylene**

INCREMENTAL RISK CALCULATIONS:

| Incremental risk from vapor intrusion to indoor air, carcinogen (unitless) | Hazard quotient from vapor intrusion to indoor air, noncarcinogen (unitless) |
|---|---|
| **NA** | **5.0E-04** |

**MESSAGE SUMMARY BELOW:**

**END**

USEPA SG-SCREEN
Version 2.0, 04/2003

DTSC Modification
December 2014

# Department of Toxic Substances Control
# Vapor Intrusion Screening Model - Soil Gas

DATA ENTRY SHEET

**Scenario:** Residential
**Chemical:** 1,1-Dichloroethylene

**Results Summary**

| Soil Gas Conc. ($\mu g/m^3$) | Attenuation Factor (unitless) | Indoor Air Conc. ($\mu g/m^3$) | Cancer Risk | Noncancer Hazard |
|---|---|---|---|---|
| 5.30E+01 | 2.9E-04 | 1.6E-02 | NA | 2.1E-04 |

Reset to Defaults

Soil Gas Concentration Data

| ENTER Chemical CAS No. (numbers only, no dashes) | ENTER Soil gas conc., $C_g$ ($\mu g/m^3$) | OR | ENTER Soil gas conc., $C_g$ (ppmv) | Chemical |
|---|---|---|---|---|
| 75354 | 5.30E+01 | | | 1,1-Dichloroethylene |

MORE ↓

| ENTER Depth below grade to bottom of enclosed space floor, $L_F$ (15 or 200 cm) | ENTER Soil gas sampling depth below grade, $L_s$ (cm) | ENTER Average soil temperature, $T_S$ (°C) | ENTER Vadose zone SCS soil type (used to estimate soil vapor permeability) | OR | ENTER User-defined vadose zone soil vapor permeability, $k_v$ ($cm^2$) |
|---|---|---|---|---|---|
| 15 | 457 | 24 | SIL | | |

MORE ↓

| ENTER Vandose zone SCS soil type (Lookup Soil Parameters) | ENTER Vadose zone soil dry bulk density, $\rho_b^A$ ($g/cm^3$) | ENTER Vadose zone soil total porosity, $n^V$ (unitless) | ENTER Vadose zone soil water-filled porosity, $\theta_w^V$ ($cm^3/cm^3$) | ENTER Average vapor flow rate into bldg. (Leave blank to calculate) $Q_{soil}$ (L/m) |
|---|---|---|---|---|
| SIL | 1.49 | 0.439 | 0.18 | 5 |

MORE ↓

Lookup Receptor Parameters

| | ENTER Averaging time for carcinogens, $AT_C$ (yrs) | ENTER Averaging time for noncarcinogens, $AT_{NC}$ (yrs) | ENTER Exposure duration, ED (yrs) | ENTER Exposure frequency, EF (days/yr) | ENTER Exposure Time ET (hrs/day) | ENTER Air Exchange Rate ACH $(hour)^{-1}$ |
|---|---|---|---|---|---|---|
| NEW=> Residential | 70 | 26 | 26 | 350 | 24 | 0.5 |
| | | | | | (NEW) | (NEW) |

END

## 1,1-Dichloroethylene

| Diffusivity in air, $D_a$ ($cm^2/s$) | Diffusivity in water, $D_w$ ($cm^2/s$) | Henry's law constant at reference temperature, H (atm-$m^3$/mol) | Henry's law constant reference temperature, $T_R$ ($^oC$) | Enthalpy of vaporization at the normal boiling point, $\Delta H_{v,b}$ (cal/mol) | Normal boiling point, $T_B$ ($^oK$) | Critical temperature, $T_C$ ($^oK$) | Unit risk factor, URF ($\mu g/m^3)^{-1}$ | Reference conc., RfC ($mg/m^3$) | Molecular weight, MW (g/mol) |
|---|---|---|---|---|---|---|---|---|---|
| 8.63E-02 | 1.10E-05 | 2.61E-02 | 25 | 6,247 | 304.75 | 576.05 | 0.0E+00 | 7.0E-02 | 96.94 |

**END**

**Scenario:** **Residential**

**Chemical:** **1,1-Dichloroethylene**

| Source-building separation, $L_T$ (cm) | Vadose zone soil air-filled porosity, $\theta_a^V$ ($cm^3/cm^3$) | Vadose zone effective total fluid saturation, $S_{te}$ ($cm^3/cm^3$) | Vadose zone soil intrinsic permeability, $k_i$ ($cm^2$) | Vadose zone soil relative air permeability, $k_{rg}$ ($cm^2$) | Vadose zone soil effective vapor permeability, $k_v$ ($cm^2$) | Floor-wall seam perimeter, $X_{crack}$ (cm) | Soil gas conc. ($\mu g/m^3$) | Bldg. ventilation rate, $Q_{building}$ ($cm^3/s$) |
|---|---|---|---|---|---|---|---|---|
| 442 | 0.259 | 0.307 | 2.89E-09 | 0.798 | 2.30E-09 | 4,000 | 5.30E+01 | 3.39E+04 |

| Area of enclosed space below grade, $A_B$ ($cm^2$) | Crack-to-total area ratio, $\eta$ (unitless) | Crack depth below grade, $Z_{crack}$ (cm) | Enthalpy of vaporization at ave. soil temperature, $\Delta H_{v,TS}$ (cal/mol) | Henry's law constant at ave. soil temperature, $H_{TS}$ (atm-$m^3$/mol) | Henry's law constant at ave. soil temperature, $H'_{TS}$ (unitless) | Vapor viscosity at ave. soil temperature, $\mu_{TS}$ (g/cm-s) | Vadose zone effective diffusion coefficient, $D^{eff}_V$ ($cm^2/s$) | Diffusion path length, $L_d$ (cm) |
|---|---|---|---|---|---|---|---|---|
| 1.00E+06 | 5.00E-03 | 15 | 6,299 | 2.52E-02 | 1.03E+00 | 1.80E-04 | 4.98E-03 | 442 |

| Convection path length, $L_p$ (cm) | Source vapor conc., $C_{source}$ ($\mu g/m^3$) | Crack radius, $r_{crack}$ (cm) | Average vapor flow rate into bldg., $Q_{soil}$ ($cm^3/s$) | Crack effective diffusion coefficient, $D^{crack}$ ($cm^2/s$) | Area of crack, $A_{crack}$ ($cm^2$) | Exponent of equivalent foundation Peclet number, $exp(Pe^f)$ (unitless) | Infinite source indoor attenuation coefficient, $\alpha$ (unitless) | Infinite source bldg. conc., $C_{building}$ ($\mu g/m^3$) |
|---|---|---|---|---|---|---|---|---|
| 15 | 5.30E+01 | 1.25 | 8.33E+01 | 4.98E-03 | 5.00E+03 | 3.37E+14 | **2.93E-04** | 1.55E-02 |

| Unit risk factor, URF $(\mu g/m^3)^{-1}$ | Reference conc., RfC ($mg/m^3$) |
|---|---|
| NA | 7.0E-02 |

**END**

**Scenario:** **Residential**
**Chemical:** **1,1-Dichloroethylene**

INCREMENTAL RISK CALCULATIONS:

| Incremental risk from vapor intrusion to indoor air, carcinogen (unitless) | Hazard quotient from vapor intrusion to indoor air, noncarcinogen (unitless) |
|---|---|
| **NA** | **2.1E-04** |

**MESSAGE SUMMARY BELOW:**

**END**

USEPA SG-SCREEN
Version 2.0, 04/2003

DTSC Modification
December 2014

# Department of Toxic Substances Control
# Vapor Intrusion Screening Model - Soil Gas

DATA ENTRY SHEET

**Scenario:** Commercial
**Chemical:** 1,1-Dichloroethylene

**Results Summary**

| Soil Gas Conc. ($\mu g/m^3$) | Attenuation Factor (unitless) | Indoor Air Conc. ($\mu g/m^3$) | Cancer Risk | Noncancer Hazard |
|---|---|---|---|---|
| 5.30E+01 | 1.5E-04 | 7.8E-03 | NA | 2.5E-05 |

Reset to Defaults

Soil Gas Concentration Data

| ENTER Chemical CAS No. (numbers only, no dashes) | ENTER Soil gas conc., $C_g$ ($\mu g/m^3$) | OR | ENTER Soil gas conc., $C_g$ (ppmv) | Chemical |
|---|---|---|---|---|
| 75354 | 5.30E+01 | | | 1,1-Dichloroethylene |

MORE ↓

| ENTER Depth below grade to bottom of enclosed space floor, $L_F$ (15 or 200 cm) | ENTER Soil gas sampling depth below grade, $L_s$ (cm) | ENTER Average soil temperature, $T_S$ (°C) | ENTER Vadose zone SCS soil type (used to estimate soil vapor permeability) | OR | ENTER User-defined vadose zone soil vapor permeability, $k_v$ ($cm^2$) |
|---|---|---|---|---|---|
| 15 | 457 | 24 | SIL | | |

MORE ↓

| ENTER Vandose zone SCS soil type (Lookup Soil Parameters) | ENTER Vadose zone soil dry bulk density, $\rho_b^A$ ($g/cm^3$) | ENTER Vadose zone soil total porosity, $n^V$ (unitless) | ENTER Vadose zone soil water-filled porosity, $\theta_w^V$ ($cm^3/cm^3$) | ENTER Average vapor flow rate into bldg. (Leave blank to calculate) $Q_{soil}$ (L/m) |
|---|---|---|---|---|
| SIL | 1.49 | 0.439 | 0.18 | 5 |

MORE ↓

Lookup Receptor Parameters

| | ENTER Averaging time for carcinogens, $AT_C$ (yrs) | ENTER Averaging time for noncarcinogens, $AT_{NC}$ (yrs) | ENTER Exposure duration, ED (yrs) | ENTER Exposure frequency, EF (days/yr) | ENTER Exposure Time ET (hrs/day) | ENTER Air Exchange Rate ACH $(hour)^{-1}$ |
|---|---|---|---|---|---|---|
| NEW=> Commercial | 70 | 25 | 25 | 250 | 8 | 1 |
| | | | | | (NEW) | (NEW) |

END

## 1,1-Dichloroethylene

| Diffusivity in air, $D_a$ ($cm^2/s$) | Diffusivity in water, $D_w$ ($cm^2/s$) | Henry's law constant at reference temperature, H (atm-$m^3$/mol) | Henry's law constant reference temperature, $T_R$ ($^oC$) | Enthalpy of vaporization at the normal boiling point, $\Delta H_{v,b}$ (cal/mol) | Normal boiling point, $T_B$ ($^oK$) | Critical temperature, $T_C$ ($^oK$) | Unit risk factor, URF ($\mu g/m^3)^{-1}$ | Reference conc., RfC ($mg/m^3$) | Molecular weight, MW (g/mol) |
|---|---|---|---|---|---|---|---|---|---|
| 8.63E-02 | 1.10E-05 | 2.61E-02 | 25 | 6,247 | 304.75 | 576.05 | 0.0E+00 | 7.0E-02 | 96.94 |

**END**

**Scenario:** **Commercial**

**Chemical:** **1,1-Dichloroethylene**

| Source-building separation, $L_T$ (cm) | Vadose zone soil air-filled porosity, $\theta_a^V$ ($cm^3/cm^3$) | Vadose zone effective total fluid saturation, $S_{te}$ ($cm^3/cm^3$) | Vadose zone soil intrinsic permeability, $k_i$ ($cm^2$) | Vadose zone soil relative air permeability, $k_{rg}$ ($cm^2$) | Vadose zone soil effective vapor permeability, $k_v$ ($cm^2$) | Floor-wall seam perimeter, $X_{crack}$ (cm) | Soil gas conc. ($\mu g/m^3$) | Bldg. ventilation rate, $Q_{building}$ ($cm^3/s$) |
|---|---|---|---|---|---|---|---|---|
| 442 | 0.259 | 0.307 | 2.89E-09 | 0.798 | 2.30E-09 | 4,000 | 5.30E+01 | 6.78E+04 |

| Area of enclosed space below grade, $A_B$ ($cm^2$) | Crack-to-total area ratio, $\eta$ (unitless) | Crack depth below grade, $Z_{crack}$ (cm) | Enthalpy of vaporization at ave. soil temperature, $\Delta H_{v,TS}$ (cal/mol) | Henry's law constant at ave. soil temperature, $H_{TS}$ (atm-$m^3$/mol) | Henry's law constant at ave. soil temperature, $H'_{TS}$ (unitless) | Vapor viscosity at ave. soil temperature, $\mu_{TS}$ (g/cm-s) | Vadose zone effective diffusion coefficient, $D^{eff}_V$ ($cm^2/s$) | Diffusion path length, $L_d$ (cm) |
|---|---|---|---|---|---|---|---|---|
| 1.00E+06 | 5.00E-03 | 15 | 6,299 | 2.52E-02 | 1.03E+00 | 1.80E-04 | 4.98E-03 | 442 |

| Convection path length, $L_p$ (cm) | Source vapor conc., $C_{source}$ ($\mu g/m^3$) | Crack radius, $r_{crack}$ (cm) | Average vapor flow rate into bldg., $Q_{soil}$ ($cm^3/s$) | Crack effective diffusion coefficient, $D^{crack}$ ($cm^2/s$) | Area of crack, $A_{crack}$ ($cm^2$) | Exponent of equivalent foundation Peclet number, $exp(Pe^f)$ (unitless) | Infinite source indoor attenuation coefficient, $\alpha$ (unitless) | Infinite source bldg. conc., $C_{building}$ ($\mu g/m^3$) |
|---|---|---|---|---|---|---|---|---|
| 15 | 5.30E+01 | 1.25 | 8.33E+01 | 4.98E-03 | 5.00E+03 | 3.37E+14 | **1.47E-04** | 7.76E-03 |

| Unit risk factor, URF $(\mu g/m^3)^{-1}$ | Reference conc., RfC ($mg/m^3$) |
|---|---|
| NA | 7.0E-02 |

**END**

**Scenario:** **Commercial**
**Chemical:** **1,1-Dichloroethylene**

INCREMENTAL RISK CALCULATIONS:

| Incremental risk from vapor intrusion to indoor air, carcinogen (unitless) | Hazard quotient from vapor intrusion to indoor air, noncarcinogen (unitless) |
|---|---|
| **NA** | **2.5E-05** |

**MESSAGE SUMMARY BELOW:**

**END**

USEPA SG-SCREEN
Version 2.0, 04/2003

DTSC Modification
December 2014

# Department of Toxic Substances Control
# Vapor Intrusion Screening Model - Soil Gas

DATA ENTRY SHEET

**Scenario:** Residential
**Chemical:** 1,1-Dichloroethylene

**Results Summary**

| Soil Gas Conc. ($\mu g/m^3$) | Attenuation Factor (unitless) | Indoor Air Conc. ($\mu g/m^3$) | Cancer Risk | Noncancer Hazard |
|---|---|---|---|---|
| 2.40E+03 | 1.5E-04 | 3.7E-01 | NA | 5.0E-03 |

Reset to Defaults

Soil Gas Concentration Data

| ENTER Chemical CAS No. (numbers only, no dashes) | ENTER Soil gas conc., $C_g$ ($\mu g/m^3$) | OR | ENTER Soil gas conc., $C_g$ (ppmv) | Chemical |
|---|---|---|---|---|
| 75354 | 2.40E+03 | | | 1,1-Dichloroethylene |

MORE ↓

| ENTER Depth below grade to bottom of enclosed space floor, $L_F$ (15 or 200 cm) | ENTER Soil gas sampling depth below grade, $L_s$ (cm) | ENTER Average soil temperature, $T_S$ (°C) | ENTER Vadose zone SCS soil type (used to estimate soil vapor permeability) | OR | ENTER User-defined vadose zone soil vapor permeability, $k_v$ ($cm^2$) |
|---|---|---|---|---|---|
| 15 | 914 | 24 | SIL | | |

MORE ↓

| ENTER Vandose zone SCS soil type (Lookup Soil Parameters) | ENTER Vadose zone soil dry bulk density, $\rho_b^A$ ($g/cm^3$) | ENTER Vadose zone soil total porosity, $n^V$ (unitless) | ENTER Vadose zone soil water-filled porosity, $\theta_w^V$ ($cm^3/cm^3$) | ENTER Average vapor flow rate into bldg. (Leave blank to calculate) $Q_{soil}$ (L/m) |
|---|---|---|---|---|
| SIL | 1.49 | 0.439 | 0.18 | 5 |

MORE ↓

Lookup Receptor Parameters

| | ENTER Averaging time for carcinogens, $AT_C$ (yrs) | ENTER Averaging time for noncarcinogens, $AT_{NC}$ (yrs) | ENTER Exposure duration, ED (yrs) | ENTER Exposure frequency, EF (days/yr) | ENTER Exposure Time ET (hrs/day) | ENTER Air Exchange Rate ACH $(hour)^{-1}$ |
|---|---|---|---|---|---|---|
| NEW=> Residential | 70 | 26 | 26 | 350 | 24 | 0.5 |
| | | | | | (NEW) | (NEW) |

END

## 1,1-Dichloroethylene

| Diffusivity in air, $D_a$ ($cm^2/s$) | Diffusivity in water, $D_w$ ($cm^2/s$) | Henry's law constant at reference temperature, H (atm-$m^3$/mol) | Henry's law constant reference temperature, $T_R$ ($^oC$) | Enthalpy of vaporization at the normal boiling point, $\Delta H_{v,b}$ (cal/mol) | Normal boiling point, $T_B$ ($^oK$) | Critical temperature, $T_C$ ($^oK$) | Unit risk factor, URF ($\mu g/m^3)^{-1}$ | Reference conc., RfC ($mg/m^3$) | Molecular weight, MW (g/mol) |
|---|---|---|---|---|---|---|---|---|---|
| 8.63E-02 | 1.10E-05 | 2.61E-02 | 25 | 6,247 | 304.75 | 576.05 | 0.0E+00 | 7.0E-02 | 96.94 |

**END**

INTERMEDIATE CALCULATIONS SHEET

**Scenario:** **Residential**

**Chemical:** **1,1-Dichloroethylene**

| Source-building separation, $L_T$ (cm) | Vadose zone soil air-filled porosity, $\theta_a^V$ ($cm^3/cm^3$) | Vadose zone effective total fluid saturation, $S_{te}$ ($cm^3/cm^3$) | Vadose zone soil intrinsic permeability, $k_i$ ($cm^2$) | Vadose zone soil relative air permeability, $k_{rg}$ ($cm^2$) | Vadose zone soil effective vapor permeability, $k_v$ ($cm^2$) | Floor-wall seam perimeter, $X_{crack}$ (cm) | Soil gas conc. ($\mu g/m^3$) | Bldg. ventilation rate, $Q_{building}$ ($cm^3/s$) |
|---|---|---|---|---|---|---|---|---|
| 899 | 0.259 | 0.307 | 2.89E-09 | 0.798 | 2.30E-09 | 4,000 | 2.40E+03 | 3.39E+04 |

| Area of enclosed space below grade, $A_B$ ($cm^2$) | Crack-to-total area ratio, $\eta$ (unitless) | Crack depth below grade, $Z_{crack}$ (cm) | Enthalpy of vaporization at ave. soil temperature, $\Delta H_{v,TS}$ (cal/mol) | Henry's law constant at ave. soil temperature, $H_{TS}$ (atm-$m^3$/mol) | Henry's law constant at ave. soil temperature, $H'_{TS}$ (unitless) | Vapor viscosity at ave. soil temperature, $\mu_{TS}$ (g/cm-s) | Vadose zone effective diffusion coefficient, $D^{eff}_V$ ($cm^2/s$) | Diffusion path length, $L_d$ (cm) |
|---|---|---|---|---|---|---|---|---|
| 1.00E+06 | 5.00E-03 | 15 | 6,299 | 2.52E-02 | 1.03E+00 | 1.80E-04 | 4.98E-03 | 899 |

| Convection path length, $L_p$ (cm) | Source vapor conc., $C_{source}$ ($\mu g/m^3$) | Crack radius, $r_{crack}$ (cm) | Average vapor flow rate into bldg., $Q_{soil}$ ($cm^3/s$) | Crack effective diffusion coefficient, $D^{crack}$ ($cm^2/s$) | Area of crack, $A_{crack}$ ($cm^2$) | Exponent of equivalent foundation Peclet number, $exp(Pe^f)$ (unitless) | Infinite source indoor attenuation coefficient, $\alpha$ (unitless) | Infinite source bldg. conc., $C_{building}$ ($\mu g/m^3$) |
|---|---|---|---|---|---|---|---|---|
| 15 | 2.40E+03 | 1.25 | 8.33E+01 | 4.98E-03 | 5.00E+03 | 3.37E+14 | **1.53E-04** | 3.68E-01 |

| Unit risk factor, URF $(\mu g/m^3)^{-1}$ | Reference conc., RfC ($mg/m^3$) |
|---|---|
| NA | 7.0E-02 |

**END**

**Scenario:** **Residential**
**Chemical:** **1,1-Dichloroethylene**

INCREMENTAL RISK CALCULATIONS:

| Incremental risk from vapor intrusion to indoor air, carcinogen (unitless) | Hazard quotient from vapor intrusion to indoor air, noncarcinogen (unitless) |
|---|---|
| **NA** | **5.0E-03** |

**MESSAGE SUMMARY BELOW:**

**END**

USEPA SG-SCREEN
Version 2.0, 04/2003

DTSC Modification
December 2014

# Department of Toxic Substances Control
# Vapor Intrusion Screening Model - Soil Gas

DATA ENTRY SHEET

**Scenario:** Commercial
**Chemical:** 1,1-Dichloroethylene

**Results Summary**

| Soil Gas Conc. ($\mu g/m^3$) | Attenuation Factor (unitless) | Indoor Air Conc. ($\mu g/m^3$) | Cancer Risk | Noncancer Hazard |
|---|---|---|---|---|
| 2.40E+03 | 7.7E-05 | 1.8E-01 | NA | 6.0E-04 |

Reset to Defaults

Soil Gas Concentration Data

| ENTER Chemical CAS No. (numbers only, no dashes) | ENTER Soil gas conc., $C_g$ ($\mu g/m^3$) | OR | ENTER Soil gas conc., $C_g$ (ppmv) | Chemical |
|---|---|---|---|---|
| 75354 | 2.40E+03 | | | 1,1-Dichloroethylene |

MORE ↓

| ENTER Depth below grade to bottom of enclosed space floor, $L_F$ (15 or 200 cm) | ENTER Soil gas sampling depth below grade, $L_s$ (cm) | ENTER Average soil temperature, $T_S$ ($^oC$) | ENTER Vadose zone SCS soil type (used to estimate soil vapor permeability) | OR | ENTER User-defined vadose zone soil vapor permeability, $k_v$ ($cm^2$) |
|---|---|---|---|---|---|
| 15 | 914 | 24 | SIL | | |

MORE ↓

| ENTER Vandose zone SCS soil type (Lookup Soil Parameters) | ENTER Vadose zone soil dry bulk density, $\rho_b^A$ ($g/cm^3$) | ENTER Vadose zone soil total porosity, $n^V$ (unitless) | ENTER Vadose zone soil water-filled porosity, $\theta_w^V$ ($cm^3/cm^3$) | ENTER Average vapor flow rate into bldg. (Leave blank to calculate) $Q_{soil}$ (L/m) |
|---|---|---|---|---|
| SIL | 1.49 | 0.439 | 0.18 | 5 |

MORE ↓

Lookup Receptor Parameters

| | ENTER Averaging time for carcinogens, $AT_C$ (yrs) | ENTER Averaging time for noncarcinogens, $AT_{NC}$ (yrs) | ENTER Exposure duration, ED (yrs) | ENTER Exposure frequency, EF (days/yr) | ENTER Exposure Time ET (hrs/day) | ENTER Air Exchange Rate ACH $(hour)^{-1}$ |
|---|---|---|---|---|---|---|
| NEW=> Commercial | 70 | 25 | 25 | 250 | 8 | 1 |
| | | | | | (NEW) | (NEW) |

END

## 1,1-Dichloroethylene

| Diffusivity in air, $D_a$ ($cm^2/s$) | Diffusivity in water, $D_w$ ($cm^2/s$) | Henry's law constant at reference temperature, H (atm-$m^3$/mol) | Henry's law constant reference temperature, $T_R$ ($^oC$) | Enthalpy of vaporization at the normal boiling point, $\Delta H_{v,b}$ (cal/mol) | Normal boiling point, $T_B$ ($^oK$) | Critical temperature, $T_C$ ($^oK$) | Unit risk factor, URF ($\mu g/m^3)^{-1}$ | Reference conc., RfC ($mg/m^3$) | Molecular weight, MW (g/mol) |
|---|---|---|---|---|---|---|---|---|---|
| 8.63E-02 | 1.10E-05 | 2.61E-02 | 25 | 6,247 | 304.75 | 576.05 | 0.0E+00 | 7.0E-02 | 96.94 |

**END**

**Scenario:** **Commercial**

**Chemical:** **1,1-Dichloroethylene**

| Source-building separation, $L_T$ (cm) | Vadose zone soil air-filled porosity, $\theta_a^V$ ($cm^3/cm^3$) | Vadose zone effective total fluid saturation, $S_{te}$ ($cm^3/cm^3$) | Vadose zone soil intrinsic permeability, $k_i$ ($cm^2$) | Vadose zone soil relative air permeability, $k_{rg}$ ($cm^2$) | Vadose zone soil effective vapor permeability, $k_v$ ($cm^2$) | Floor-wall seam perimeter, $X_{crack}$ (cm) | Soil gas conc. ($\mu g/m^3$) | Bldg. ventilation rate, $Q_{building}$ ($cm^3/s$) |
|---|---|---|---|---|---|---|---|---|
| 899 | 0.259 | 0.307 | 2.89E-09 | 0.798 | 2.30E-09 | 4,000 | 2.40E+03 | 6.78E+04 |

| Area of enclosed space below grade, $A_B$ ($cm^2$) | Crack-to-total area ratio, $\eta$ (unitless) | Crack depth below grade, $Z_{crack}$ (cm) | Enthalpy of vaporization at ave. soil temperature, $\Delta H_{v,TS}$ (cal/mol) | Henry's law constant at ave. soil temperature, $H_{TS}$ (atm-$m^3$/mol) | Henry's law constant at ave. soil temperature, $H'_{TS}$ (unitless) | Vapor viscosity at ave. soil temperature, $\mu_{TS}$ (g/cm-s) | Vadose zone effective diffusion coefficient, $D^{eff}_V$ ($cm^2/s$) | Diffusion path length, $L_d$ (cm) |
|---|---|---|---|---|---|---|---|---|
| 1.00E+06 | 5.00E-03 | 15 | 6,299 | 2.52E-02 | 1.03E+00 | 1.80E-04 | 4.98E-03 | 899 |

| Convection path length, $L_p$ (cm) | Source vapor conc., $C_{source}$ ($\mu g/m^3$) | Crack radius, $r_{crack}$ (cm) | Average vapor flow rate into bldg., $Q_{soil}$ ($cm^3/s$) | Crack effective diffusion coefficient, $D^{crack}$ ($cm^2/s$) | Area of crack, $A_{crack}$ ($cm^2$) | Exponent of equivalent foundation Peclet number, $exp(Pe^f)$ (unitless) | Infinite source indoor attenuation coefficient, $\alpha$ (unitless) | Infinite source bldg. conc., $C_{building}$ ($\mu g/m^3$) |
|---|---|---|---|---|---|---|---|---|
| 15 | 2.40E+03 | 1.25 | 8.33E+01 | 4.98E-03 | 5.00E+03 | 3.37E+14 | **7.67E-05** | 1.84E-01 |

| Unit risk factor, URF $(\mu g/m^3)^{-1}$ | Reference conc., RfC ($mg/m^3$) |
|---|---|
| NA | 7.0E-02 |

**END**

**Scenario:** **Commercial**
**Chemical:** **1,1-Dichloroethylene**

INCREMENTAL RISK CALCULATIONS:

| Incremental risk from vapor intrusion to indoor air, carcinogen (unitless) | Hazard quotient from vapor intrusion to indoor air, noncarcinogen (unitless) |
|---|---|
| **NA** | **6.0E-04** |

**MESSAGE SUMMARY BELOW:**

**END**

USEPA SG-SCREEN
Version 2.0, 04/2003

DTSC Modification
December 2014

# Department of Toxic Substances Control
# Vapor Intrusion Screening Model - Soil Gas

DATA ENTRY SHEET

**Scenario:** Residential
**Chemical:** 1,1-Dichloroethylene

**Results Summary**

| Soil Gas Conc. ($\mu g/m^3$) | Attenuation Factor (unitless) | Indoor Air Conc. ($\mu g/m^3$) | Cancer Risk | Noncancer Hazard |
|---|---|---|---|---|
| 2.50E+02 | 7.5E-04 | 1.9E-01 | NA | 2.6E-03 |

Reset to Defaults

Soil Gas Concentration Data

| ENTER Chemical CAS No. (numbers only, no dashes) | ENTER Soil gas conc., $C_g$ ($\mu g/m^3$) | OR | ENTER Soil gas conc., $C_g$ (ppmv) | Chemical |
|---|---|---|---|---|
| 75354 | 2.50E+02 | | | 1,1-Dichloroethylene |

MORE ↓

| ENTER Depth below grade to bottom of enclosed space floor, $L_F$ (15 or 200 cm) | ENTER Soil gas sampling depth below grade, $L_s$ (cm) | ENTER Average soil temperature, $T_S$ (°C) | ENTER Vadose zone SCS soil type (used to estimate soil vapor permeability) | OR | ENTER User-defined vadose zone soil vapor permeability, $k_v$ ($cm^2$) |
|---|---|---|---|---|---|
| 15 | 152 | 24 | SIL | | |

MORE ↓

| ENTER Vandose zone SCS soil type (Lookup Soil Parameters) | ENTER Vadose zone soil dry bulk density, $\rho_b^A$ ($g/cm^3$) | ENTER Vadose zone soil total porosity, $n^V$ (unitless) | ENTER Vadose zone soil water-filled porosity, $\theta_w^V$ ($cm^3/cm^3$) | ENTER Average vapor flow rate into bldg. (Leave blank to calculate) $Q_{soil}$ (L/m) |
|---|---|---|---|---|
| SIL | 1.49 | 0.439 | 0.18 | 5 |

MORE ↓

Lookup Receptor Parameters

| | ENTER Averaging time for carcinogens, $AT_C$ (yrs) | ENTER Averaging time for noncarcinogens, $AT_{NC}$ (yrs) | ENTER Exposure duration, ED (yrs) | ENTER Exposure frequency, EF (days/yr) | ENTER Exposure Time ET (hrs/day) | ENTER Air Exchange Rate ACH $(hour)^{-1}$ |
|---|---|---|---|---|---|---|
| NEW=> Residential | 70 | 26 | 26 | 350 | 24 (NEW) | 0.5 (NEW) |

END

## 1,1-Dichloroethylene

| Diffusivity in air, $D_a$ ($cm^2/s$) | Diffusivity in water, $D_w$ ($cm^2/s$) | Henry's law constant at reference temperature, H (atm-$m^3$/mol) | Henry's law constant reference temperature, $T_R$ ($^oC$) | Enthalpy of vaporization at the normal boiling point, $\Delta H_{v,b}$ (cal/mol) | Normal boiling point, $T_B$ ($^oK$) | Critical temperature, $T_C$ ($^oK$) | Unit risk factor, URF ($\mu g/m^3)^{-1}$ | Reference conc., RfC ($mg/m^3$) | Molecular weight, MW (g/mol) |
|---|---|---|---|---|---|---|---|---|---|
| 8.63E-02 | 1.10E-05 | 2.61E-02 | 25 | 6,247 | 304.75 | 576.05 | 0.0E+00 | 7.0E-02 | 96.94 |

**END**

INTERMEDIATE CALCULATIONS SHEET

**Scenario:** **Residential**

**Chemical:** **1,1-Dichloroethylene**

| Source-building separation, $L_T$ (cm) | Vadose zone soil air-filled porosity, $\theta_a^V$ ($cm^3/cm^3$) | Vadose zone effective total fluid saturation, $S_{te}$ ($cm^3/cm^3$) | Vadose zone soil intrinsic permeability, $k_i$ ($cm^2$) | Vadose zone soil relative air permeability, $k_{rg}$ ($cm^2$) | Vadose zone soil effective vapor permeability, $k_v$ ($cm^2$) | Floor-wall seam perimeter, $X_{crack}$ (cm) | Soil gas conc. ($\mu g/m^3$) | Bldg. ventilation rate, $Q_{building}$ ($cm^3/s$) |
|---|---|---|---|---|---|---|---|---|
| 137 | 0.259 | 0.307 | 2.89E-09 | 0.798 | 2.30E-09 | 4,000 | 2.50E+02 | 3.39E+04 |

| Area of enclosed space below grade, $A_B$ ($cm^2$) | Crack-to-total area ratio, $\eta$ (unitless) | Crack depth below grade, $Z_{crack}$ (cm) | Enthalpy of vaporization at ave. soil temperature, $\Delta H_{v,TS}$ (cal/mol) | Henry's law constant at ave. soil temperature, $H_{TS}$ (atm-$m^3$/mol) | Henry's law constant at ave. soil temperature, $H'_{TS}$ (unitless) | Vapor viscosity at ave. soil temperature, $\mu_{TS}$ (g/cm-s) | Vadose zone effective diffusion coefficient, $D^{eff}_V$ ($cm^2/s$) | Diffusion path length, $L_d$ (cm) |
|---|---|---|---|---|---|---|---|---|
| 1.00E+06 | 5.00E-03 | 15 | 6,299 | 2.52E-02 | 1.03E+00 | 1.80E-04 | 4.98E-03 | 137 |

| Convection path length, $L_p$ (cm) | Source vapor conc., $C_{source}$ ($\mu g/m^3$) | Crack radius, $r_{crack}$ (cm) | Average vapor flow rate into bldg., $Q_{soil}$ ($cm^3/s$) | Crack effective diffusion coefficient, $D^{crack}$ ($cm^2/s$) | Area of crack, $A_{crack}$ ($cm^2$) | Exponent of equivalent foundation Peclet number, $exp(Pe^f)$ (unitless) | Infinite source indoor attenuation coefficient, $\alpha$ (unitless) | Infinite source bldg. conc., $C_{building}$ ($\mu g/m^3$) |
|---|---|---|---|---|---|---|---|---|
| 15 | 2.50E+02 | 1.25 | 8.33E+01 | 4.98E-03 | 5.00E+03 | 3.37E+14 | **7.47E-04** | 1.87E-01 |

| Unit risk factor, URF $(\mu g/m^3)^{-1}$ | Reference conc., RfC ($mg/m^3$) |
|---|---|
| NA | 7.0E-02 |

**END**

**Scenario:** **Residential**
**Chemical:** **1,1-Dichloroethylene**

INCREMENTAL RISK CALCULATIONS:

| Incremental risk from vapor intrusion to indoor air, carcinogen (unitless) | Hazard quotient from vapor intrusion to indoor air, noncarcinogen (unitless) |
|---|---|
| **NA** | **2.6E-03** |

**MESSAGE SUMMARY BELOW:**

**END**

USEPA SG-SCREEN
Version 2.0, 04/2003

DTSC Modification
December 2014

# Department of Toxic Substances Control
# Vapor Intrusion Screening Model - Soil Gas

DATA ENTRY SHEET

**Scenario:** Commercial
**Chemical:** 1,1-Dichloroethylene

**Results Summary**

| Soil Gas Conc. ($\mu g/m^3$) | Attenuation Factor (unitless) | Indoor Air Conc. ($\mu g/m^3$) | Cancer Risk | Noncancer Hazard |
|---|---|---|---|---|
| 2.50E+02 | 3.7E-04 | 9.3E-02 | NA | 3.0E-04 |

Reset to Defaults

Soil Gas Concentration Data

| ENTER Chemical CAS No. (numbers only, no dashes) | ENTER Soil gas conc., $C_g$ ($\mu g/m^3$) | OR | ENTER Soil gas conc., $C_g$ (ppmv) | Chemical |
|---|---|---|---|---|
| 75354 | 2.50E+02 | | | 1,1-Dichloroethylene |

MORE ↓

| ENTER Depth below grade to bottom of enclosed space floor, $L_F$ (15 or 200 cm) | ENTER Soil gas sampling depth below grade, $L_s$ (cm) | ENTER Average soil temperature, $T_S$ ($^oC$) | ENTER Vadose zone SCS soil type (used to estimate soil vapor permeability) | OR | ENTER User-defined vadose zone soil vapor permeability, $k_v$ ($cm^2$) |
|---|---|---|---|---|---|
| 15 | 152 | 24 | SIL | | |

MORE ↓

| ENTER Vandose zone SCS soil type (Lookup Soil Parameters) | ENTER Vadose zone soil dry bulk density, $\rho_b^A$ ($g/cm^3$) | ENTER Vadose zone soil total porosity, $n^V$ (unitless) | ENTER Vadose zone soil water-filled porosity, $\theta_w^V$ ($cm^3/cm^3$) | ENTER Average vapor flow rate into bldg. (Leave blank to calculate) $Q_{soil}$ (L/m) |
|---|---|---|---|---|
| SIL | 1.49 | 0.439 | 0.18 | 5 |

MORE ↓

Lookup Receptor Parameters

| | ENTER Averaging time for carcinogens, $AT_C$ (yrs) | ENTER Averaging time for noncarcinogens, $AT_{NC}$ (yrs) | ENTER Exposure duration, ED (yrs) | ENTER Exposure frequency, EF (days/yr) | ENTER Exposure Time ET (hrs/day) | ENTER Air Exchange Rate ACH $(hour)^{-1}$ |
|---|---|---|---|---|---|---|
| NEW=> Commercial | 70 | 25 | 25 | 250 | 8 | 1 |
| | | | | | (NEW) | (NEW) |

END

## 1,1-Dichloroethylene

| Diffusivity in air, $D_a$ ($cm^2/s$) | Diffusivity in water, $D_w$ ($cm^2/s$) | Henry's law constant at reference temperature, H (atm-$m^3$/mol) | Henry's law constant reference temperature, $T_R$ ($^oC$) | Enthalpy of vaporization at the normal boiling point, $\Delta H_{v,b}$ (cal/mol) | Normal boiling point, $T_B$ ($^oK$) | Critical temperature, $T_C$ ($^oK$) | Unit risk factor, URF ($\mu g/m^3)^{-1}$ | Reference conc., RfC ($mg/m^3$) | Molecular weight, MW (g/mol) |
|---|---|---|---|---|---|---|---|---|---|
| 8.63E-02 | 1.10E-05 | 2.61E-02 | 25 | 6,247 | 304.75 | 576.05 | 0.0E+00 | 7.0E-02 | 96.94 |

**END**

**Scenario:** **Commercial**

**Chemical:** **1,1-Dichloroethylene**

| Source-building separation, $L_T$ (cm) | Vadose zone soil air-filled porosity, $\theta_a^V$ ($cm^3/cm^3$) | Vadose zone effective total fluid saturation, $S_{te}$ ($cm^3/cm^3$) | Vadose zone soil intrinsic permeability, $k_i$ ($cm^2$) | Vadose zone soil relative air permeability, $k_{rg}$ ($cm^2$) | Vadose zone soil effective vapor permeability, $k_v$ ($cm^2$) | Floor-wall seam perimeter, $X_{crack}$ (cm) | Soil gas conc. ($\mu g/m^3$) | Bldg. ventilation rate, $Q_{building}$ ($cm^3/s$) |
|---|---|---|---|---|---|---|---|---|
| 137 | 0.259 | 0.307 | 2.89E-09 | 0.798 | 2.30E-09 | 4,000 | 2.50E+02 | 6.78E+04 |

| Area of enclosed space below grade, $A_B$ ($cm^2$) | Crack-to-total area ratio, $\eta$ (unitless) | Crack depth below grade, $Z_{crack}$ (cm) | Enthalpy of vaporization at ave. soil temperature, $\Delta H_{v,TS}$ (cal/mol) | Henry's law constant at ave. soil temperature, $H_{TS}$ (atm-$m^3$/mol) | Henry's law constant at ave. soil temperature, $H'_{TS}$ (unitless) | Vapor viscosity at ave. soil temperature, $\mu_{TS}$ (g/cm-s) | Vadose zone effective diffusion coefficient, $D^{eff}_V$ ($cm^2/s$) | Diffusion path length, $L_d$ (cm) |
|---|---|---|---|---|---|---|---|---|
| 1.00E+06 | 5.00E-03 | 15 | 6,299 | 2.52E-02 | 1.03E+00 | 1.80E-04 | 4.98E-03 | 137 |

| Convection path length, $L_p$ (cm) | Source vapor conc., $C_{source}$ ($\mu g/m^3$) | Crack radius, $r_{crack}$ (cm) | Average vapor flow rate into bldg., $Q_{soil}$ ($cm^3/s$) | Crack effective diffusion coefficient, $D^{crack}$ ($cm^2/s$) | Area of crack, $A_{crack}$ ($cm^2$) | Exponent of equivalent foundation Peclet number, $exp(Pe^f)$ (unitless) | Infinite source indoor attenuation coefficient, $\alpha$ (unitless) | Infinite source bldg. conc., $C_{building}$ ($\mu g/m^3$) |
|---|---|---|---|---|---|---|---|---|
| 15 | 2.50E+02 | 1.25 | 8.33E+01 | 4.98E-03 | 5.00E+03 | 3.37E+14 | **3.74E-04** | 9.34E-02 |

| Unit risk factor, URF $(\mu g/m^3)^{-1}$ | Reference conc., RfC ($mg/m^3$) |
|---|---|
| NA | 7.0E-02 |

**END**

**Scenario:** **Commercial**
**Chemical:** **1,1-Dichloroethylene**

INCREMENTAL RISK CALCULATIONS:

| Incremental risk from vapor intrusion to indoor air, carcinogen (unitless) | Hazard quotient from vapor intrusion to indoor air, noncarcinogen (unitless) |
|---|---|
| **NA** | **3.0E-04** |

**MESSAGE SUMMARY BELOW:**

**END**

USEPA SG-SCREEN
Version 2.0, 04/2003

DTSC Modification
December 2014

# Department of Toxic Substances Control
# Vapor Intrusion Screening Model - Soil Gas

DATA ENTRY SHEET

**Scenario:** Residential
**Chemical:** 1,1-Dichloroethylene

| Results Summary | | | | |
|---|---|---|---|---|
| Soil Gas Conc. ($\mu g/m^3$) | Attenuation Factor (unitless) | Indoor Air Conc. ($\mu g/m^3$) | Cancer Risk | Noncancer Hazard |
| 1.10E+03 | 2.9E-04 | 3.2E-01 | NA | 4.4E-03 |

Reset to Defaults

Soil Gas Concentration Data

| ENTER Chemical CAS No. (numbers only, no dashes) | ENTER Soil gas conc., $C_g$ ($\mu g/m^3$) | OR | ENTER Soil gas conc., $C_g$ (ppmv) | Chemical |
|---|---|---|---|---|
| 75354 | 1.10E+03 | | | 1,1-Dichloroethylene |

MORE ↓

| ENTER Depth below grade to bottom of enclosed space floor, $L_F$ (15 or 200 cm) | ENTER Soil gas sampling depth below grade, $L_s$ (cm) | ENTER Average soil temperature, $T_S$ ($^oC$) | ENTER Vadose zone SCS soil type (used to estimate soil vapor permeability) | OR | ENTER User-defined vadose zone soil vapor permeability, $k_v$ ($cm^2$) |
|---|---|---|---|---|---|
| 15 | 457 | 24 | SIL | | |

MORE ↓

| ENTER Vandose zone SCS soil type (Lookup Soil Parameters) | ENTER Vadose zone soil dry bulk density, $\rho_b^A$ ($g/cm^3$) | ENTER Vadose zone soil total porosity, $n^V$ (unitless) | ENTER Vadose zone soil water-filled porosity, $\theta_w^V$ ($cm^3/cm^3$) | ENTER Average vapor flow rate into bldg. (Leave blank to calculate) $Q_{soil}$ (L/m) |
|---|---|---|---|---|
| SIL | 1.49 | 0.439 | 0.18 | 5 |

MORE ↓

Lookup Receptor Parameters

| | ENTER Averaging time for carcinogens, $AT_C$ (yrs) | ENTER Averaging time for noncarcinogens, $AT_{NC}$ (yrs) | ENTER Exposure duration, ED (yrs) | ENTER Exposure frequency, EF (days/yr) | ENTER Exposure Time ET (hrs/day) | ENTER Air Exchange Rate ACH $(hour)^{-1}$ |
|---|---|---|---|---|---|---|
| NEW=> Residential | 70 | 26 | 26 | 350 | 24 (NEW) | 0.5 (NEW) |

END

## 1,1-Dichloroethylene

| Diffusivity in air, $D_a$ ($cm^2/s$) | Diffusivity in water, $D_w$ ($cm^2/s$) | Henry's law constant at reference temperature, H (atm-$m^3$/mol) | Henry's law constant reference temperature, $T_R$ ($^oC$) | Enthalpy of vaporization at the normal boiling point, $\Delta H_{v,b}$ (cal/mol) | Normal boiling point, $T_B$ ($^oK$) | Critical temperature, $T_C$ ($^oK$) | Unit risk factor, URF ($\mu g/m^3)^{-1}$ | Reference conc., RfC ($mg/m^3$) | Molecular weight, MW (g/mol) |
|---|---|---|---|---|---|---|---|---|---|
| 8.63E-02 | 1.10E-05 | 2.61E-02 | 25 | 6,247 | 304.75 | 576.05 | 0.0E+00 | 7.0E-02 | 96.94 |

**END**

**Scenario:** **Residential**

**Chemical:** **1,1-Dichloroethylene**

| Source-building separation, $L_T$ (cm) | Vadose zone soil air-filled porosity, $\theta_a^V$ ($cm^3/cm^3$) | Vadose zone effective total fluid saturation, $S_{te}$ ($cm^3/cm^3$) | Vadose zone soil intrinsic permeability, $k_i$ ($cm^2$) | Vadose zone soil relative air permeability, $k_{rg}$ ($cm^2$) | Vadose zone soil effective vapor permeability, $k_v$ ($cm^2$) | Floor-wall seam perimeter, $X_{crack}$ (cm) | Soil gas conc. ($\mu g/m^3$) | Bldg. ventilation rate, $Q_{building}$ ($cm^3/s$) |
|---|---|---|---|---|---|---|---|---|
| 442 | 0.259 | 0.307 | 2.89E-09 | 0.798 | 2.30E-09 | 4,000 | 1.10E+03 | 3.39E+04 |

| Area of enclosed space below grade, $A_B$ ($cm^2$) | Crack-to-total area ratio, $\eta$ (unitless) | Crack depth below grade, $Z_{crack}$ (cm) | Enthalpy of vaporization at ave. soil temperature, $\Delta H_{v,TS}$ (cal/mol) | Henry's law constant at ave. soil temperature, $H_{TS}$ (atm-$m^3$/mol) | Henry's law constant at ave. soil temperature, $H'_{TS}$ (unitless) | Vapor viscosity at ave. soil temperature, $\mu_{TS}$ (g/cm-s) | Vadose zone effective diffusion coefficient, $D^{eff}_V$ ($cm^2/s$) | Diffusion path length, $L_d$ (cm) |
|---|---|---|---|---|---|---|---|---|
| 1.00E+06 | 5.00E-03 | 15 | 6,299 | 2.52E-02 | 1.03E+00 | 1.80E-04 | 4.98E-03 | 442 |

| Convection path length, $L_p$ (cm) | Source vapor conc., $C_{source}$ ($\mu g/m^3$) | Crack radius, $r_{crack}$ (cm) | Average vapor flow rate into bldg., $Q_{soil}$ ($cm^3/s$) | Crack effective diffusion coefficient, $D^{crack}$ ($cm^2/s$) | Area of crack, $A_{crack}$ ($cm^2$) | Exponent of equivalent foundation Peclet number, $exp(Pe^f)$ (unitless) | Infinite source indoor attenuation coefficient, $\alpha$ (unitless) | Infinite source bldg. conc., $C_{building}$ ($\mu g/m^3$) |
|---|---|---|---|---|---|---|---|---|
| 15 | 1.10E+03 | 1.25 | 8.33E+01 | 4.98E-03 | 5.00E+03 | 3.37E+14 | **2.93E-04** | 3.22E-01 |

| Unit risk factor, URF $(\mu g/m^3)^{-1}$ | Reference conc., RfC ($mg/m^3$) |
|---|---|
| NA | 7.0E-02 |

**END**

**Scenario:** **Residential**
**Chemical:** **1,1-Dichloroethylene**

INCREMENTAL RISK CALCULATIONS:

| Incremental risk from vapor intrusion to indoor air, carcinogen (unitless) | Hazard quotient from vapor intrusion to indoor air, noncarcinogen (unitless) |
|---|---|
| **NA** | **4.4E-03** |

**MESSAGE SUMMARY BELOW:**

**END**

USEPA SG-SCREEN
Version 2.0, 04/2003

DTSC Modification
December 2014

# Department of Toxic Substances Control
# Vapor Intrusion Screening Model - Soil Gas

DATA ENTRY SHEET

**Scenario:** Commercial
**Chemical:** 1,1-Dichloroethylene

**Results Summary**

| Soil Gas Conc. ($\mu g/m^3$) | Attenuation Factor (unitless) | Indoor Air Conc. ($\mu g/m^3$) | Cancer Risk | Noncancer Hazard |
|---|---|---|---|---|
| 1.10E+03 | 1.5E-04 | 1.6E-01 | NA | 5.3E-04 |

Reset to Defaults

Soil Gas Concentration Data

| ENTER Chemical CAS No. (numbers only, no dashes) | ENTER Soil gas conc., $C_g$ ($\mu g/m^3$) | OR | ENTER Soil gas conc., $C_g$ (ppmv) | Chemical |
|---|---|---|---|---|
| 75354 | 1.10E+03 | | | 1,1-Dichloroethylene |

MORE ↓

| ENTER Depth below grade to bottom of enclosed space floor, $L_F$ (15 or 200 cm) | ENTER Soil gas sampling depth below grade, $L_s$ (cm) | ENTER Average soil temperature, $T_S$ ($^oC$) | ENTER Vadose zone SCS soil type (used to estimate soil vapor permeability) | OR | ENTER User-defined vadose zone soil vapor permeability, $k_v$ ($cm^2$) |
|---|---|---|---|---|---|
| 15 | 457 | 24 | SIL | | |

MORE ↓

| ENTER Vandose zone SCS soil type (Lookup Soil Parameters) | ENTER Vadose zone soil dry bulk density, $\rho_b^A$ ($g/cm^3$) | ENTER Vadose zone soil total porosity, $n^V$ (unitless) | ENTER Vadose zone soil water-filled porosity, $\theta_w^V$ ($cm^3/cm^3$) | ENTER Average vapor flow rate into bldg. (Leave blank to calculate) $Q_{soil}$ (L/m) |
|---|---|---|---|---|
| SIL | 1.49 | 0.439 | 0.18 | 5 |

MORE ↓

Lookup Receptor Parameters

| | ENTER Averaging time for carcinogens, $AT_C$ (yrs) | ENTER Averaging time for noncarcinogens, $AT_{NC}$ (yrs) | ENTER Exposure duration, ED (yrs) | ENTER Exposure frequency, EF (days/yr) | ENTER Exposure Time ET (hrs/day) | ENTER Air Exchange Rate ACH $(hour)^{-1}$ |
|---|---|---|---|---|---|---|
| NEW=> Commercial | 70 | 25 | 25 | 250 | 8 | 1 |
| | | | | | (NEW) | (NEW) |

END

## 1,1-Dichloroethylene

| Diffusivity in air, $D_a$ ($cm^2/s$) | Diffusivity in water, $D_w$ ($cm^2/s$) | Henry's law constant at reference temperature, H (atm-$m^3$/mol) | Henry's law constant reference temperature, $T_R$ ($^oC$) | Enthalpy of vaporization at the normal boiling point, $\Delta H_{v,b}$ (cal/mol) | Normal boiling point, $T_B$ ($^oK$) | Critical temperature, $T_C$ ($^oK$) | Unit risk factor, URF ($\mu g/m^3)^{-1}$ | Reference conc., RfC ($mg/m^3$) | Molecular weight, MW (g/mol) |
|---|---|---|---|---|---|---|---|---|---|
| 8.63E-02 | 1.10E-05 | 2.61E-02 | 25 | 6,247 | 304.75 | 576.05 | 0.0E+00 | 7.0E-02 | 96.94 |

**END**

**Scenario:** **Commercial**

**Chemical:** **1,1-Dichloroethylene**

| Source-building separation, $L_T$ (cm) | Vadose zone soil air-filled porosity, $\theta_a^V$ ($cm^3/cm^3$) | Vadose zone effective total fluid saturation, $S_{te}$ ($cm^3/cm^3$) | Vadose zone soil intrinsic permeability, $k_i$ ($cm^2$) | Vadose zone soil relative air permeability, $k_{rg}$ ($cm^2$) | Vadose zone soil effective vapor permeability, $k_v$ ($cm^2$) | Floor-wall seam perimeter, $X_{crack}$ (cm) | Soil gas conc. ($\mu g/m^3$) | Bldg. ventilation rate, $Q_{building}$ ($cm^3/s$) |
|---|---|---|---|---|---|---|---|---|
| 442 | 0.259 | 0.307 | 2.89E-09 | 0.798 | 2.30E-09 | 4,000 | 1.10E+03 | 6.78E+04 |

| Area of enclosed space below grade, $A_B$ ($cm^2$) | Crack-to-total area ratio, $\eta$ (unitless) | Crack depth below grade, $Z_{crack}$ (cm) | Enthalpy of vaporization at ave. soil temperature, $\Delta H_{v,TS}$ (cal/mol) | Henry's law constant at ave. soil temperature, $H_{TS}$ (atm-$m^3$/mol) | Henry's law constant at ave. soil temperature, $H'_{TS}$ (unitless) | Vapor viscosity at ave. soil temperature, $\mu_{TS}$ (g/cm-s) | Vadose zone effective diffusion coefficient, $D^{eff}_V$ ($cm^2/s$) | Diffusion path length, $L_d$ (cm) |
|---|---|---|---|---|---|---|---|---|
| 1.00E+06 | 5.00E-03 | 15 | 6,299 | 2.52E-02 | 1.03E+00 | 1.80E-04 | 4.98E-03 | 442 |

| Convection path length, $L_p$ (cm) | Source vapor conc., $C_{source}$ ($\mu g/m^3$) | Crack radius, $r_{crack}$ (cm) | Average vapor flow rate into bldg., $Q_{soil}$ ($cm^3/s$) | Crack effective diffusion coefficient, $D^{crack}$ ($cm^2/s$) | Area of crack, $A_{crack}$ ($cm^2$) | Exponent of equivalent foundation Peclet number, $exp(Pe^f)$ (unitless) | Infinite source indoor attenuation coefficient, $\alpha$ (unitless) | Infinite source bldg. conc., $C_{building}$ ($\mu g/m^3$) |
|---|---|---|---|---|---|---|---|---|
| 15 | 1.10E+03 | 1.25 | 8.33E+01 | 4.98E-03 | 5.00E+03 | 3.37E+14 | **1.47E-04** | 1.61E-01 |

| Unit risk factor, URF $(\mu g/m^3)^{-1}$ | Reference conc., RfC ($mg/m^3$) |
|---|---|
| NA | 7.0E-02 |

**END**

**Scenario:** **Commercial**
**Chemical:** **1,1-Dichloroethylene**

INCREMENTAL RISK CALCULATIONS:

| Incremental risk from vapor intrusion to indoor air, carcinogen (unitless) | Hazard quotient from vapor intrusion to indoor air, noncarcinogen (unitless) |
|---|---|
| **NA** | **5.3E-04** |

**MESSAGE SUMMARY BELOW:**

**END**

USEPA SG-SCREEN
Version 2.0, 04/2003

DTSC Modification
December 2014

# Department of Toxic Substances Control
# Vapor Intrusion Screening Model - Soil Gas

DATA ENTRY SHEET

**Scenario:** Residential
**Chemical:** 1,1-Dichloroethylene

**Results Summary**

| Soil Gas Conc. ($\mu g/m^3$) | Attenuation Factor (unitless) | Indoor Air Conc. ($\mu g/m^3$) | Cancer Risk | Noncancer Hazard |
|---|---|---|---|---|
| 6.10E+02 | 7.5E-04 | 4.6E-01 | NA | 6.2E-03 |

Reset to Defaults

Soil Gas Concentration Data

| ENTER Chemical CAS No. (numbers only, no dashes) | ENTER Soil gas conc., $C_g$ ($\mu g/m^3$) | OR | ENTER Soil gas conc., $C_g$ (ppmv) | Chemical |
|---|---|---|---|---|
| 75354 | 6.10E+02 | | | 1,1-Dichloroethylene |

MORE ↓

| ENTER Depth below grade to bottom of enclosed space floor, $L_F$ (15 or 200 cm) | ENTER Soil gas sampling depth below grade, $L_s$ (cm) | ENTER Average soil temperature, $T_S$ ($^oC$) | ENTER Vadose zone SCS soil type (used to estimate soil vapor permeability) | OR | ENTER User-defined vadose zone soil vapor permeability, $k_v$ ($cm^2$) |
|---|---|---|---|---|---|
| 15 | 152 | 24 | SIL | | |

MORE ↓

| ENTER Vandose zone SCS soil type (Lookup Soil Parameters) | ENTER Vadose zone soil dry bulk density, $\rho_b^A$ ($g/cm^3$) | ENTER Vadose zone soil total porosity, $n^V$ (unitless) | ENTER Vadose zone soil water-filled porosity, $\theta_w^V$ ($cm^3/cm^3$) | ENTER Average vapor flow rate into bldg. (Leave blank to calculate) $Q_{soil}$ (L/m) |
|---|---|---|---|---|
| SIL | 1.49 | 0.439 | 0.18 | 5 |

MORE ↓

Lookup Receptor Parameters

| | ENTER Averaging time for carcinogens, $AT_C$ (yrs) | ENTER Averaging time for noncarcinogens, $AT_{NC}$ (yrs) | ENTER Exposure duration, ED (yrs) | ENTER Exposure frequency, EF (days/yr) | ENTER Exposure Time ET (hrs/day) | ENTER Air Exchange Rate ACH $(hour)^{-1}$ |
|---|---|---|---|---|---|---|
| NEW=> Residential | 70 | 26 | 26 | 350 | 24 | 0.5 |
| | | | | | (NEW) | (NEW) |

END

## 1,1-Dichloroethylene

| Diffusivity in air, $D_a$ ($cm^2/s$) | Diffusivity in water, $D_w$ ($cm^2/s$) | Henry's law constant at reference temperature, H (atm-$m^3$/mol) | Henry's law constant reference temperature, $T_R$ ($^oC$) | Enthalpy of vaporization at the normal boiling point, $\Delta H_{v,b}$ (cal/mol) | Normal boiling point, $T_B$ ($^oK$) | Critical temperature, $T_C$ ($^oK$) | Unit risk factor, URF ($\mu g/m^3)^{-1}$ | Reference conc., RfC ($mg/m^3$) | Molecular weight, MW (g/mol) |
|---|---|---|---|---|---|---|---|---|---|
| 8.63E-02 | 1.10E-05 | 2.61E-02 | 25 | 6,247 | 304.75 | 576.05 | 0.0E+00 | 7.0E-02 | 96.94 |

**END**

INTERMEDIATE CALCULATIONS SHEET

**Scenario:** **Residential**

**Chemical:** **1,1-Dichloroethylene**

| Source-building separation, $L_T$ (cm) | Vadose zone soil air-filled porosity, $\theta_a^V$ ($cm^3/cm^3$) | Vadose zone effective total fluid saturation, $S_{te}$ ($cm^3/cm^3$) | Vadose zone soil intrinsic permeability, $k_i$ ($cm^2$) | Vadose zone soil relative air permeability, $k_{rg}$ ($cm^2$) | Vadose zone soil effective vapor permeability, $k_v$ ($cm^2$) | Floor-wall seam perimeter, $X_{crack}$ (cm) | Soil gas conc. ($\mu g/m^3$) | Bldg. ventilation rate, $Q_{building}$ ($cm^3/s$) |
|---|---|---|---|---|---|---|---|---|
| 137 | 0.259 | 0.307 | 2.89E-09 | 0.798 | 2.30E-09 | 4,000 | 6.10E+02 | 3.39E+04 |

| Area of enclosed space below grade, $A_B$ ($cm^2$) | Crack-to-total area ratio, $\eta$ (unitless) | Crack depth below grade, $Z_{crack}$ (cm) | Enthalpy of vaporization at ave. soil temperature, $\Delta H_{v,TS}$ (cal/mol) | Henry's law constant at ave. soil temperature, $H_{TS}$ (atm-$m^3$/mol) | Henry's law constant at ave. soil temperature, $H'_{TS}$ (unitless) | Vapor viscosity at ave. soil temperature, $\mu_{TS}$ (g/cm-s) | Vadose zone effective diffusion coefficient, $D^{eff}_V$ ($cm^2/s$) | Diffusion path length, $L_d$ (cm) |
|---|---|---|---|---|---|---|---|---|
| 1.00E+06 | 5.00E-03 | 15 | 6,299 | 2.52E-02 | 1.03E+00 | 1.80E-04 | 4.98E-03 | 137 |

| Convection path length, $L_p$ (cm) | Source vapor conc., $C_{source}$ ($\mu g/m^3$) | Crack radius, $r_{crack}$ (cm) | Average vapor flow rate into bldg., $Q_{soil}$ ($cm^3/s$) | Crack effective diffusion coefficient, $D^{crack}$ ($cm^2/s$) | Area of crack, $A_{crack}$ ($cm^2$) | Exponent of equivalent foundation Peclet number, $exp(Pe^f)$ (unitless) | Infinite source indoor attenuation coefficient, $\alpha$ (unitless) | Infinite source bldg. conc., $C_{building}$ ($\mu g/m^3$) |
|---|---|---|---|---|---|---|---|---|
| 15 | 6.10E+02 | 1.25 | 8.33E+01 | 4.98E-03 | 5.00E+03 | 3.37E+14 | **7.47E-04** | 4.56E-01 |

| Unit risk factor, URF $(\mu g/m^3)^{-1}$ | Reference conc., RfC ($mg/m^3$) |
|---|---|
| NA | 7.0E-02 |

**END**

**Scenario:** **Residential**
**Chemical:** **1,1-Dichloroethylene**

INCREMENTAL RISK CALCULATIONS:

| Incremental risk from vapor intrusion to indoor air, carcinogen (unitless) | Hazard quotient from vapor intrusion to indoor air, noncarcinogen (unitless) |
|---|---|
| **NA** | **6.2E-03** |

**MESSAGE SUMMARY BELOW:**

**END**

USEPA SG-SCREEN
Version 2.0, 04/2003

DTSC Modification
December 2014

# Department of Toxic Substances Control
# Vapor Intrusion Screening Model - Soil Gas

DATA ENTRY SHEET

**Scenario:** Commercial
**Chemical:** 1,1-Dichloroethylene

**Results Summary**

| Soil Gas Conc. ($\mu g/m^3$) | Attenuation Factor (unitless) | Indoor Air Conc. ($\mu g/m^3$) | Cancer Risk | Noncancer Hazard |
|---|---|---|---|---|
| 6.10E+02 | 3.7E-04 | 2.3E-01 | NA | 7.4E-04 |

Reset to Defaults

Soil Gas Concentration Data

| ENTER Chemical CAS No. (numbers only, no dashes) | ENTER Soil gas conc., $C_g$ ($\mu g/m^3$) | OR | ENTER Soil gas conc., $C_g$ (ppmv) | Chemical |
|---|---|---|---|---|
| 75354 | 6.10E+02 | | | 1,1-Dichloroethylene |

MORE ↓

| ENTER Depth below grade to bottom of enclosed space floor, $L_F$ (15 or 200 cm) | ENTER Soil gas sampling depth below grade, $L_s$ (cm) | ENTER Average soil temperature, $T_S$ ($^oC$) | ENTER Vadose zone SCS soil type (used to estimate soil vapor permeability) | OR | ENTER User-defined vadose zone soil vapor permeability, $k_v$ ($cm^2$) |
|---|---|---|---|---|---|
| 15 | 152 | 24 | SIL | | |

MORE ↓

| ENTER Vandose zone SCS soil type (Lookup Soil Parameters) | ENTER Vadose zone soil dry bulk density, $\rho_b^A$ ($g/cm^3$) | ENTER Vadose zone soil total porosity, $n^V$ (unitless) | ENTER Vadose zone soil water-filled porosity, $\theta_w^V$ ($cm^3/cm^3$) | ENTER Average vapor flow rate into bldg. (Leave blank to calculate) $Q_{soil}$ (L/m) |
|---|---|---|---|---|
| SIL | 1.49 | 0.439 | 0.18 | 5 |

MORE ↓

Lookup Receptor Parameters

| | ENTER Averaging time for carcinogens, $AT_C$ (yrs) | ENTER Averaging time for noncarcinogens, $AT_{NC}$ (yrs) | ENTER Exposure duration, ED (yrs) | ENTER Exposure frequency, EF (days/yr) | ENTER Exposure Time ET (hrs/day) | ENTER Air Exchange Rate ACH $(hour)^{-1}$ |
|---|---|---|---|---|---|---|
| NEW=> Commercial | 70 | 25 | 25 | 250 | 8 | 1 |
| | | | | | (NEW) | (NEW) |

END

## 1,1-Dichloroethylene

| Diffusivity in air, $D_a$ ($cm^2/s$) | Diffusivity in water, $D_w$ ($cm^2/s$) | Henry's law constant at reference temperature, H (atm-$m^3$/mol) | Henry's law constant reference temperature, $T_R$ ($^oC$) | Enthalpy of vaporization at the normal boiling point, $\Delta H_{v,b}$ (cal/mol) | Normal boiling point, $T_B$ ($^oK$) | Critical temperature, $T_C$ ($^oK$) | Unit risk factor, URF ($\mu g/m^3)^{-1}$ | Reference conc., RfC ($mg/m^3$) | Molecular weight, MW (g/mol) |
|---|---|---|---|---|---|---|---|---|---|
| 8.63E-02 | 1.10E-05 | 2.61E-02 | 25 | 6,247 | 304.75 | 576.05 | 0.0E+00 | 7.0E-02 | 96.94 |

**END**

**Scenario:** **Commercial**

**Chemical:** **1,1-Dichloroethylene**

| Source-building separation, $L_T$ (cm) | Vadose zone soil air-filled porosity, $\theta_a^V$ ($cm^3/cm^3$) | Vadose zone effective total fluid saturation, $S_{te}$ ($cm^3/cm^3$) | Vadose zone soil intrinsic permeability, $k_i$ ($cm^2$) | Vadose zone soil relative air permeability, $k_{rg}$ ($cm^2$) | Vadose zone soil effective vapor permeability, $k_v$ ($cm^2$) | Floor-wall seam perimeter, $X_{crack}$ (cm) | Soil gas conc. ($\mu g/m^3$) | Bldg. ventilation rate, $Q_{building}$ ($cm^3/s$) |
|---|---|---|---|---|---|---|---|---|
| 137 | 0.259 | 0.307 | 2.89E-09 | 0.798 | 2.30E-09 | 4,000 | 6.10E+02 | 6.78E+04 |

| Area of enclosed space below grade, $A_B$ ($cm^2$) | Crack-to-total area ratio, $\eta$ (unitless) | Crack depth below grade, $Z_{crack}$ (cm) | Enthalpy of vaporization at ave. soil temperature, $\Delta H_{v,TS}$ (cal/mol) | Henry's law constant at ave. soil temperature, $H_{TS}$ (atm-$m^3$/mol) | Henry's law constant at ave. soil temperature, $H'_{TS}$ (unitless) | Vapor viscosity at ave. soil temperature, $\mu_{TS}$ (g/cm-s) | Vadose zone effective diffusion coefficient, $D^{eff}_V$ ($cm^2/s$) | Diffusion path length, $L_d$ (cm) |
|---|---|---|---|---|---|---|---|---|
| 1.00E+06 | 5.00E-03 | 15 | 6,299 | 2.52E-02 | 1.03E+00 | 1.80E-04 | 4.98E-03 | 137 |

| Convection path length, $L_p$ (cm) | Source vapor conc., $C_{source}$ ($\mu g/m^3$) | Crack radius, $r_{crack}$ (cm) | Average vapor flow rate into bldg., $Q_{soil}$ ($cm^3/s$) | Crack effective diffusion coefficient, $D^{crack}$ ($cm^2/s$) | Area of crack, $A_{crack}$ ($cm^2$) | Exponent of equivalent foundation Peclet number, $exp(Pe^f)$ (unitless) | Infinite source indoor attenuation coefficient, $\alpha$ (unitless) | Infinite source bldg. conc., $C_{building}$ ($\mu g/m^3$) |
|---|---|---|---|---|---|---|---|---|
| 15 | 6.10E+02 | 1.25 | 8.33E+01 | 4.98E-03 | 5.00E+03 | 3.37E+14 | **3.74E-04** | 2.28E-01 |

| Unit risk factor, URF $(\mu g/m^3)^{-1}$ | Reference conc., RfC ($mg/m^3$) |
|---|---|
| NA | 7.0E-02 |

**END**

**Scenario:** **Commercial**
**Chemical:** **1,1-Dichloroethylene**

INCREMENTAL RISK CALCULATIONS:

| Incremental risk from vapor intrusion to indoor air, carcinogen (unitless) | Hazard quotient from vapor intrusion to indoor air, noncarcinogen (unitless) |
|---|---|
| **NA** | **7.4E-04** |

**MESSAGE SUMMARY BELOW:**

**END**

USEPA SG-SCREEN
Version 2.0, 04/2003

DTSC Modification
December 2014

# Department of Toxic Substances Control
# Vapor Intrusion Screening Model - Soil Gas

DATA ENTRY SHEET

**Scenario:** Residential
**Chemical:** 1,1-Dichloroethylene

| Results Summary | | | | |
|---|---|---|---|---|
| Soil Gas Conc. ($\mu g/m^3$) | Attenuation Factor (unitless) | Indoor Air Conc. ($\mu g/m^3$) | Cancer Risk | Noncancer Hazard |
| 1.10E+03 | 3.9E-04 | 4.3E-01 | NA | 5.8E-03 |

Reset to Defaults

Soil Gas Concentration Data

| ENTER Chemical CAS No. (numbers only, no dashes) | ENTER Soil gas conc., $C_g$ ($\mu g/m^3$) | OR | ENTER Soil gas conc., $C_g$ (ppmv) | Chemical |
|---|---|---|---|---|
| 75354 | 1.10E+03 | | | 1,1-Dichloroethylene |

MORE ↓

| ENTER Depth below grade to bottom of enclosed space floor, $L_F$ (15 or 200 cm) | ENTER Soil gas sampling depth below grade, $L_s$ (cm) | ENTER Average soil temperature, $T_S$ (°C) | ENTER Vadose zone SCS soil type (used to estimate soil vapor permeability) | OR | ENTER User-defined vadose zone soil vapor permeability, $k_v$ ($cm^2$) |
|---|---|---|---|---|---|
| 15 | 335 | 24 | SIL | | |

MORE ↓

| ENTER Vandose zone SCS soil type (Lookup Soil Parameters) | ENTER Vadose zone soil dry bulk density, $\rho_b^A$ ($g/cm^3$) | ENTER Vadose zone soil total porosity, $n^V$ (unitless) | ENTER Vadose zone soil water-filled porosity, $\theta_w^V$ ($cm^3/cm^3$) | ENTER Average vapor flow rate into bldg. (Leave blank to calculate) $Q_{soil}$ (L/m) |
|---|---|---|---|---|
| SIL | 1.49 | 0.439 | 0.18 | 5 |

MORE ↓

Lookup Receptor Parameters

| | ENTER Averaging time for carcinogens, $AT_C$ (yrs) | ENTER Averaging time for noncarcinogens, $AT_{NC}$ (yrs) | ENTER Exposure duration, ED (yrs) | ENTER Exposure frequency, EF (days/yr) | ENTER Exposure Time ET (hrs/day) | ENTER Air Exchange Rate ACH $(hour)^{-1}$ |
|---|---|---|---|---|---|---|
| NEW=> Residential | 70 | 26 | 26 | 350 | 24 (NEW) | 0.5 (NEW) |

END

## 1,1-Dichloroethylene

| Diffusivity in air, $D_a$ ($cm^2/s$) | Diffusivity in water, $D_w$ ($cm^2/s$) | Henry's law constant at reference temperature, H (atm-$m^3$/mol) | Henry's law constant reference temperature, $T_R$ ($^oC$) | Enthalpy of vaporization at the normal boiling point, $\Delta H_{v,b}$ (cal/mol) | Normal boiling point, $T_B$ ($^oK$) | Critical temperature, $T_C$ ($^oK$) | Unit risk factor, URF ($\mu g/m^3)^{-1}$ | Reference conc., RfC ($mg/m^3$) | Molecular weight, MW (g/mol) |
|---|---|---|---|---|---|---|---|---|---|
| 8.63E-02 | 1.10E-05 | 2.61E-02 | 25 | 6,247 | 304.75 | 576.05 | 0.0E+00 | 7.0E-02 | 96.94 |

**END**

**Scenario:** **Residential**

**Chemical:** **1,1-Dichloroethylene**

| Source-building separation, $L_T$ (cm) | Vadose zone soil air-filled porosity, $\theta_a^V$ ($cm^3/cm^3$) | Vadose zone effective total fluid saturation, $S_{te}$ ($cm^3/cm^3$) | Vadose zone soil intrinsic permeability, $k_i$ ($cm^2$) | Vadose zone soil relative air permeability, $k_{rg}$ ($cm^2$) | Vadose zone soil effective vapor permeability, $k_v$ ($cm^2$) | Floor-wall seam perimeter, $X_{crack}$ (cm) | Soil gas conc. ($\mu g/m^3$) | Bldg. ventilation rate, $Q_{building}$ ($cm^3/s$) |
|---|---|---|---|---|---|---|---|---|
| 320 | 0.259 | 0.307 | 2.89E-09 | 0.798 | 2.30E-09 | 4,000 | 1.10E+03 | 3.39E+04 |

| Area of enclosed space below grade, $A_B$ ($cm^2$) | Crack-to-total area ratio, $\eta$ (unitless) | Crack depth below grade, $Z_{crack}$ (cm) | Enthalpy of vaporization at ave. soil temperature, $\Delta H_{v,TS}$ (cal/mol) | Henry's law constant at ave. soil temperature, $H_{TS}$ (atm-$m^3$/mol) | Henry's law constant at ave. soil temperature, $H'_{TS}$ (unitless) | Vapor viscosity at ave. soil temperature, $\mu_{TS}$ (g/cm-s) | Vadose zone effective diffusion coefficient, $D^{eff}_V$ ($cm^2/s$) | Diffusion path length, $L_d$ (cm) |
|---|---|---|---|---|---|---|---|---|
| 1.00E+06 | 5.00E-03 | 15 | 6,299 | 2.52E-02 | 1.03E+00 | 1.80E-04 | 4.98E-03 | 320 |

| Convection path length, $L_p$ (cm) | Source vapor conc., $C_{source}$ ($\mu g/m^3$) | Crack radius, $r_{crack}$ (cm) | Average vapor flow rate into bldg., $Q_{soil}$ ($cm^3/s$) | Crack effective diffusion coefficient, $D^{crack}$ ($cm^2/s$) | Area of crack, $A_{crack}$ ($cm^2$) | Exponent of equivalent foundation Peclet number, $exp(Pe^f)$ (unitless) | Infinite source indoor attenuation coefficient, $\alpha$ (unitless) | Infinite source bldg. conc., $C_{building}$ ($\mu g/m^3$) |
|---|---|---|---|---|---|---|---|---|
| 15 | 1.10E+03 | 1.25 | 8.33E+01 | 4.98E-03 | 5.00E+03 | 3.37E+14 | **3.87E-04** | 4.26E-01 |

| Unit risk factor, URF $(\mu g/m^3)^{-1}$ | Reference conc., RfC ($mg/m^3$) |
|---|---|
| NA | 7.0E-02 |

**END**

**Scenario:** **Residential**
**Chemical:** **1,1-Dichloroethylene**

INCREMENTAL RISK CALCULATIONS:

| Incremental risk from vapor intrusion to indoor air, carcinogen (unitless) | Hazard quotient from vapor intrusion to indoor air, noncarcinogen (unitless) |
|---|---|
| **NA** | **5.8E-03** |

**MESSAGE SUMMARY BELOW:**

**END**

USEPA SG-SCREEN
Version 2.0, 04/2003

DTSC Modification
December 2014

# Department of Toxic Substances Control
# Vapor Intrusion Screening Model - Soil Gas

DATA ENTRY SHEET

**Scenario:** Commercial
**Chemical:** 1,1-Dichloroethylene

**Results Summary**

| Soil Gas Conc. ($\mu g/m^3$) | Attenuation Factor (unitless) | Indoor Air Conc. ($\mu g/m^3$) | Cancer Risk | Noncancer Hazard |
|---|---|---|---|---|
| 1.10E+03 | 1.9E-04 | 2.1E-01 | NA | 6.9E-04 |

Reset to Defaults

Soil Gas Concentration Data

| ENTER Chemical CAS No. (numbers only, no dashes) | ENTER Soil gas conc., $C_g$ ($\mu g/m^3$) | OR | ENTER Soil gas conc., $C_g$ (ppmv) | Chemical |
|---|---|---|---|---|
| 75354 | 1.10E+03 | | | 1,1-Dichloroethylene |

MORE ↓

| ENTER Depth below grade to bottom of enclosed space floor, $L_F$ (15 or 200 cm) | ENTER Soil gas sampling depth below grade, $L_s$ (cm) | ENTER Average soil temperature, $T_S$ ($^oC$) | ENTER Vadose zone SCS soil type (used to estimate soil vapor permeability) | OR | ENTER User-defined vadose zone soil vapor permeability, $k_v$ ($cm^2$) |
|---|---|---|---|---|---|
| 15 | 335 | 24 | SIL | | |

MORE ↓

| ENTER Vandose zone SCS soil type (Lookup Soil Parameters) | ENTER Vadose zone soil dry bulk density, $\rho_b^A$ ($g/cm^3$) | ENTER Vadose zone soil total porosity, $n^V$ (unitless) | ENTER Vadose zone soil water-filled porosity, $\theta_w^V$ ($cm^3/cm^3$) | ENTER Average vapor flow rate into bldg. (Leave blank to calculate) $Q_{soil}$ (L/m) |
|---|---|---|---|---|
| SIL | 1.49 | 0.439 | 0.18 | 5 |

MORE ↓

Lookup Receptor Parameters

| | ENTER Averaging time for carcinogens, $AT_C$ (yrs) | ENTER Averaging time for noncarcinogens, $AT_{NC}$ (yrs) | ENTER Exposure duration, ED (yrs) | ENTER Exposure frequency, EF (days/yr) | ENTER Exposure Time ET (hrs/day) | ENTER Air Exchange Rate ACH $(hour)^{-1}$ |
|---|---|---|---|---|---|---|
| NEW=> Commercial | 70 | 25 | 25 | 250 | 8 | 1 |
| | | | | | (NEW) | (NEW) |

END

## 1,1-Dichloroethylene

| Diffusivity in air, $D_a$ ($cm^2/s$) | Diffusivity in water, $D_w$ ($cm^2/s$) | Henry's law constant at reference temperature, H (atm-$m^3$/mol) | Henry's law constant reference temperature, $T_R$ ($^oC$) | Enthalpy of vaporization at the normal boiling point, $\Delta H_{v,b}$ (cal/mol) | Normal boiling point, $T_B$ ($^oK$) | Critical temperature, $T_C$ ($^oK$) | Unit risk factor, URF ($\mu g/m^3)^{-1}$ | Reference conc., RfC ($mg/m^3$) | Molecular weight, MW (g/mol) |
|---|---|---|---|---|---|---|---|---|---|
| 8.63E-02 | 1.10E-05 | 2.61E-02 | 25 | 6,247 | 304.75 | 576.05 | 0.0E+00 | 7.0E-02 | 96.94 |

**END**

**Scenario:** **Commercial**

**Chemical:** **1,1-Dichloroethylene**

| Source-building separation, $L_T$ (cm) | Vadose zone soil air-filled porosity, $\theta_a^V$ ($cm^3/cm^3$) | Vadose zone effective total fluid saturation, $S_{te}$ ($cm^3/cm^3$) | Vadose zone soil intrinsic permeability, $k_i$ ($cm^2$) | Vadose zone soil relative air permeability, $k_{rg}$ ($cm^2$) | Vadose zone soil effective vapor permeability, $k_v$ ($cm^2$) | Floor-wall seam perimeter, $X_{crack}$ (cm) | Soil gas conc. ($\mu g/m^3$) | Bldg. ventilation rate, $Q_{building}$ ($cm^3/s$) |
|---|---|---|---|---|---|---|---|---|
| 320 | 0.259 | 0.307 | 2.89E-09 | 0.798 | 2.30E-09 | 4,000 | 1.10E+03 | 6.78E+04 |

| Area of enclosed space below grade, $A_B$ ($cm^2$) | Crack-to-total area ratio, $\eta$ (unitless) | Crack depth below grade, $Z_{crack}$ (cm) | Enthalpy of vaporization at ave. soil temperature, $\Delta H_{v,TS}$ (cal/mol) | Henry's law constant at ave. soil temperature, $H_{TS}$ (atm-$m^3$/mol) | Henry's law constant at ave. soil temperature, $H'_{TS}$ (unitless) | Vapor viscosity at ave. soil temperature, $\mu_{TS}$ (g/cm-s) | Vadose zone effective diffusion coefficient, $D^{eff}_V$ ($cm^2/s$) | Diffusion path length, $L_d$ (cm) |
|---|---|---|---|---|---|---|---|---|
| 1.00E+06 | 5.00E-03 | 15 | 6,299 | 2.52E-02 | 1.03E+00 | 1.80E-04 | 4.98E-03 | 320 |

| Convection path length, $L_p$ (cm) | Source vapor conc., $C_{source}$ ($\mu g/m^3$) | Crack radius, $r_{crack}$ (cm) | Average vapor flow rate into bldg., $Q_{soil}$ ($cm^3/s$) | Crack effective diffusion coefficient, $D^{crack}$ ($cm^2/s$) | Area of crack, $A_{crack}$ ($cm^2$) | Exponent of equivalent foundation Peclet number, $exp(Pe^f)$ (unitless) | Infinite source indoor attenuation coefficient, $\alpha$ (unitless) | Infinite source bldg. conc., $C_{building}$ ($\mu g/m^3$) |
|---|---|---|---|---|---|---|---|---|
| 15 | 1.10E+03 | 1.25 | 8.33E+01 | 4.98E-03 | 5.00E+03 | 3.37E+14 | **1.94E-04** | 2.13E-01 |

| Unit risk factor, URF $(\mu g/m^3)^{-1}$ | Reference conc., RfC ($mg/m^3$) |
|---|---|
| NA | 7.0E-02 |

**END**

**Scenario:** **Commercial**
**Chemical:** **1,1-Dichloroethylene**

INCREMENTAL RISK CALCULATIONS:

| Incremental risk from vapor intrusion to indoor air, carcinogen (unitless) | Hazard quotient from vapor intrusion to indoor air, noncarcinogen (unitless) |
|---|---|
| **NA** | **6.9E-04** |

**MESSAGE SUMMARY BELOW:**

**END**

USEPA SG-SCREEN
Version 2.0, 04/2003

DTSC Modification
December 2014

# Department of Toxic Substances Control
# Vapor Intrusion Screening Model - Soil Gas

DATA ENTRY SHEET

**Scenario:** Residential
**Chemical:** 1,1-Dichloroethylene

**Results Summary**

| Soil Gas Conc. ($\mu g/m^3$) | Attenuation Factor (unitless) | Indoor Air Conc. ($\mu g/m^3$) | Cancer Risk | Noncancer Hazard |
|---|---|---|---|---|
| 4.30E+01 | 3.9E-04 | 1.7E-02 | NA | 2.3E-04 |

Reset to Defaults

Soil Gas Concentration Data

| ENTER Chemical CAS No. (numbers only, no dashes) | ENTER Soil gas conc., $C_g$ ($\mu g/m^3$) | OR | ENTER Soil gas conc., $C_g$ (ppmv) | Chemical |
|---|---|---|---|---|
| 75354 | 4.30E+01 | | | 1,1-Dichloroethylene |

MORE ↓

| ENTER Depth below grade to bottom of enclosed space floor, $L_F$ (15 or 200 cm) | ENTER Soil gas sampling depth below grade, $L_s$ (cm) | ENTER Average soil temperature, $T_S$ ($^oC$) | ENTER Vadose zone SCS soil type (used to estimate soil vapor permeability) | OR | ENTER User-defined vadose zone soil vapor permeability, $k_v$ ($cm^2$) |
|---|---|---|---|---|---|
| 15 | 335 | 24 | SIL | | |

MORE ↓

| ENTER Vandose zone SCS soil type (Lookup Soil Parameters) | ENTER Vadose zone soil dry bulk density, $\rho_b^A$ ($g/cm^3$) | ENTER Vadose zone soil total porosity, $n^V$ (unitless) | ENTER Vadose zone soil water-filled porosity, $\theta_w^V$ ($cm^3/cm^3$) | ENTER Average vapor flow rate into bldg. (Leave blank to calculate) $Q_{soil}$ (L/m) |
|---|---|---|---|---|
| SIL | 1.49 | 0.439 | 0.18 | 5 |

MORE ↓

Lookup Receptor Parameters

| | ENTER Averaging time for carcinogens, $AT_C$ (yrs) | ENTER Averaging time for noncarcinogens, $AT_{NC}$ (yrs) | ENTER Exposure duration, ED (yrs) | ENTER Exposure frequency, EF (days/yr) | ENTER Exposure Time ET (hrs/day) | ENTER Air Exchange Rate ACH $(hour)^{-1}$ |
|---|---|---|---|---|---|---|
| NEW=> Residential | 70 | 26 | 26 | 350 | 24 | 0.5 |
| | | | | | (NEW) | (NEW) |

END

## 1,1-Dichloroethylene

| Diffusivity in air, $D_a$ ($cm^2/s$) | Diffusivity in water, $D_w$ ($cm^2/s$) | Henry's law constant at reference temperature, H (atm-$m^3$/mol) | Henry's law constant reference temperature, $T_R$ ($^oC$) | Enthalpy of vaporization at the normal boiling point, $\Delta H_{v,b}$ (cal/mol) | Normal boiling point, $T_B$ ($^oK$) | Critical temperature, $T_C$ ($^oK$) | Unit risk factor, URF ($\mu g/m^3)^{-1}$ | Reference conc., RfC ($mg/m^3$) | Molecular weight, MW (g/mol) |
|---|---|---|---|---|---|---|---|---|---|
| 8.63E-02 | 1.10E-05 | 2.61E-02 | 25 | 6,247 | 304.75 | 576.05 | 0.0E+00 | 7.0E-02 | 96.94 |

**END**

INTERMEDIATE CALCULATIONS SHEET

**Scenario:** **Residential**

**Chemical:** **1,1-Dichloroethylene**

| Source-building separation, $L_T$ (cm) | Vadose zone soil air-filled porosity, $\theta_a^V$ ($cm^3/cm^3$) | Vadose zone effective total fluid saturation, $S_{te}$ ($cm^3/cm^3$) | Vadose zone soil intrinsic permeability, $k_i$ ($cm^2$) | Vadose zone soil relative air permeability, $k_{rg}$ ($cm^2$) | Vadose zone soil effective vapor permeability, $k_v$ ($cm^2$) | Floor-wall seam perimeter, $X_{crack}$ (cm) | Soil gas conc. ($\mu g/m^3$) | Bldg. ventilation rate, $Q_{building}$ ($cm^3/s$) |
|---|---|---|---|---|---|---|---|---|
| 320 | 0.259 | 0.307 | 2.89E-09 | 0.798 | 2.30E-09 | 4,000 | 4.30E+01 | 3.39E+04 |

| Area of enclosed space below grade, $A_B$ ($cm^2$) | Crack-to-total area ratio, $\eta$ (unitless) | Crack depth below grade, $Z_{crack}$ (cm) | Enthalpy of vaporization at ave. soil temperature, $\Delta H_{v,TS}$ (cal/mol) | Henry's law constant at ave. soil temperature, $H_{TS}$ (atm-$m^3$/mol) | Henry's law constant at ave. soil temperature, $H'_{TS}$ (unitless) | Vapor viscosity at ave. soil temperature, $\mu_{TS}$ (g/cm-s) | Vadose zone effective diffusion coefficient, $D^{eff}_V$ ($cm^2/s$) | Diffusion path length, $L_d$ (cm) |
|---|---|---|---|---|---|---|---|---|
| 1.00E+06 | 5.00E-03 | 15 | 6,299 | 2.52E-02 | 1.03E+00 | 1.80E-04 | 4.98E-03 | 320 |

| Convection path length, $L_p$ (cm) | Source vapor conc., $C_{source}$ ($\mu g/m^3$) | Crack radius, $r_{crack}$ (cm) | Average vapor flow rate into bldg., $Q_{soil}$ ($cm^3/s$) | Crack effective diffusion coefficient, $D^{crack}$ ($cm^2/s$) | Area of crack, $A_{crack}$ ($cm^2$) | Exponent of equivalent foundation Peclet number, $exp(Pe^f)$ (unitless) | Infinite source indoor attenuation coefficient, $\alpha$ (unitless) | Infinite source bldg. conc., $C_{building}$ ($\mu g/m^3$) |
|---|---|---|---|---|---|---|---|---|
| 15 | 4.30E+01 | 1.25 | 8.33E+01 | 4.98E-03 | 5.00E+03 | 3.37E+14 | **3.87E-04** | 1.66E-02 |

| Unit risk factor, URF $(\mu g/m^3)^{-1}$ | Reference conc., RfC ($mg/m^3$) |
|---|---|
| NA | 7.0E-02 |

**END**

**Scenario:** **Residential**
**Chemical:** **1,1-Dichloroethylene**

INCREMENTAL RISK CALCULATIONS:

| Incremental risk from vapor intrusion to indoor air, carcinogen (unitless) | Hazard quotient from vapor intrusion to indoor air, noncarcinogen (unitless) |
|---|---|
| **NA** | **2.3E-04** |

**MESSAGE SUMMARY BELOW:**

**END**

USEPA SG-SCREEN
Version 2.0, 04/2003

DTSC Modification
December 2014

# Department of Toxic Substances Control
# Vapor Intrusion Screening Model - Soil Gas

DATA ENTRY SHEET

**Scenario:** Commercial
**Chemical:** 1,1-Dichloroethylene

**Results Summary**

| Soil Gas Conc. ($\mu g/m^3$) | Attenuation Factor (unitless) | Indoor Air Conc. ($\mu g/m^3$) | Cancer Risk | Noncancer Hazard |
|---|---|---|---|---|
| 4.30E+01 | 1.9E-04 | 8.3E-03 | NA | 2.7E-05 |

Reset to Defaults

Soil Gas Concentration Data

| ENTER Chemical CAS No. (numbers only, no dashes) | ENTER Soil gas conc., $C_g$ ($\mu g/m^3$) | OR | ENTER Soil gas conc., $C_g$ (ppmv) | Chemical |
|---|---|---|---|---|
| 75354 | 4.30E+01 | | | 1,1-Dichloroethylene |

MORE ↓

| ENTER Depth below grade to bottom of enclosed space floor, $L_F$ (15 or 200 cm) | ENTER Soil gas sampling depth below grade, $L_s$ (cm) | ENTER Average soil temperature, $T_S$ ($^oC$) | ENTER Vadose zone SCS soil type (used to estimate soil vapor permeability) | OR | ENTER User-defined vadose zone soil vapor permeability, $k_v$ ($cm^2$) |
|---|---|---|---|---|---|
| 15 | 335 | 24 | SIL | | |

MORE ↓

| ENTER Vandose zone SCS soil type (Lookup Soil Parameters) | ENTER Vadose zone soil dry bulk density, $\rho_b^A$ ($g/cm^3$) | ENTER Vadose zone soil total porosity, $n^V$ (unitless) | ENTER Vadose zone soil water-filled porosity, $\theta_w^V$ ($cm^3/cm^3$) | ENTER Average vapor flow rate into bldg. (Leave blank to calculate) $Q_{soil}$ (L/m) |
|---|---|---|---|---|
| SIL | 1.49 | 0.439 | 0.18 | 5 |

MORE ↓

Lookup Receptor Parameters

| | ENTER Averaging time for carcinogens, $AT_C$ (yrs) | ENTER Averaging time for noncarcinogens, $AT_{NC}$ (yrs) | ENTER Exposure duration, ED (yrs) | ENTER Exposure frequency, EF (days/yr) | ENTER Exposure Time ET (hrs/day) | ENTER Air Exchange Rate ACH $(hour)^{-1}$ |
|---|---|---|---|---|---|---|
| NEW=> Commercial | 70 | 25 | 25 | 250 | 8 | 1 |
| | | | | | (NEW) | (NEW) |

END

## 1,1-Dichloroethylene

| Diffusivity in air, $D_a$ ($cm^2/s$) | Diffusivity in water, $D_w$ ($cm^2/s$) | Henry's law constant at reference temperature, H (atm-$m^3$/mol) | Henry's law constant reference temperature, $T_R$ ($^oC$) | Enthalpy of vaporization at the normal boiling point, $\Delta H_{v,b}$ (cal/mol) | Normal boiling point, $T_B$ ($^oK$) | Critical temperature, $T_C$ ($^oK$) | Unit risk factor, URF ($\mu g/m^3)^{-1}$ | Reference conc., RfC ($mg/m^3$) | Molecular weight, MW (g/mol) |
|---|---|---|---|---|---|---|---|---|---|
| 8.63E-02 | 1.10E-05 | 2.61E-02 | 25 | 6,247 | 304.75 | 576.05 | 0.0E+00 | 7.0E-02 | 96.94 |

**END**

**Scenario:** **Commercial**

**Chemical:** **1,1-Dichloroethylene**

| Source-building separation, $L_T$ (cm) | Vadose zone soil air-filled porosity, $\theta_a^V$ ($cm^3/cm^3$) | Vadose zone effective total fluid saturation, $S_{te}$ ($cm^3/cm^3$) | Vadose zone soil intrinsic permeability, $k_i$ ($cm^2$) | Vadose zone soil relative air permeability, $k_{rg}$ ($cm^2$) | Vadose zone soil effective vapor permeability, $k_v$ ($cm^2$) | Floor-wall seam perimeter, $X_{crack}$ (cm) | Soil gas conc. ($\mu g/m^3$) | Bldg. ventilation rate, $Q_{building}$ ($cm^3/s$) |
|---|---|---|---|---|---|---|---|---|
| 320 | 0.259 | 0.307 | 2.89E-09 | 0.798 | 2.30E-09 | 4,000 | 4.30E+01 | 6.78E+04 |

| Area of enclosed space below grade, $A_B$ ($cm^2$) | Crack-to-total area ratio, $\eta$ (unitless) | Crack depth below grade, $Z_{crack}$ (cm) | Enthalpy of vaporization at ave. soil temperature, $\Delta H_{v,TS}$ (cal/mol) | Henry's law constant at ave. soil temperature, $H_{TS}$ (atm-$m^3$/mol) | Henry's law constant at ave. soil temperature, $H'_{TS}$ (unitless) | Vapor viscosity at ave. soil temperature, $\mu_{TS}$ (g/cm-s) | Vadose zone effective diffusion coefficient, $D^{eff}_V$ ($cm^2/s$) | Diffusion path length, $L_d$ (cm) |
|---|---|---|---|---|---|---|---|---|
| 1.00E+06 | 5.00E-03 | 15 | 6,299 | 2.52E-02 | 1.03E+00 | 1.80E-04 | 4.98E-03 | 320 |

| Convection path length, $L_p$ (cm) | Source vapor conc., $C_{source}$ ($\mu g/m^3$) | Crack radius, $r_{crack}$ (cm) | Average vapor flow rate into bldg., $Q_{soil}$ ($cm^3/s$) | Crack effective diffusion coefficient, $D^{crack}$ ($cm^2/s$) | Area of crack, $A_{crack}$ ($cm^2$) | Exponent of equivalent foundation Peclet number, $exp(Pe^f)$ (unitless) | Infinite source indoor attenuation coefficient, $\alpha$ (unitless) | Infinite source bldg. conc., $C_{building}$ ($\mu g/m^3$) |
|---|---|---|---|---|---|---|---|---|
| 15 | 4.30E+01 | 1.25 | 8.33E+01 | 4.98E-03 | 5.00E+03 | 3.37E+14 | **1.94E-04** | 8.32E-03 |

| Unit risk factor, URF $(\mu g/m^3)^{-1}$ | Reference conc., RfC ($mg/m^3$) |
|---|---|
| NA | 7.0E-02 |

**END**

**Scenario:** **Commercial**
**Chemical:** **1,1-Dichloroethylene**

INCREMENTAL RISK CALCULATIONS:

| Incremental risk from vapor intrusion to indoor air, carcinogen (unitless) | Hazard quotient from vapor intrusion to indoor air, noncarcinogen (unitless) |
|---|---|
| **NA** | **2.7E-05** |

**MESSAGE SUMMARY BELOW:**

**END**

USEPA SG-SCREEN
Version 2.0, 04/2003

DTSC Modification
December 2014

# Department of Toxic Substances Control
# Vapor Intrusion Screening Model - Soil Gas

DATA ENTRY SHEET

**Scenario:** Residential
**Chemical:** cis-1,2-Dichloroethylene

**Results Summary**

| Soil Gas Conc. ($\mu g/m^3$) | Attenuation Factor (unitless) | Indoor Air Conc. ($\mu g/m^3$) | Cancer Risk | Noncancer Hazard |
|---|---|---|---|---|
| 3.60E+01 | 4.0E-04 | 1.4E-02 | NA | 1.9E-03 |

MESSAGE: Risk and/or hazard quotient is based on route-to-route extrapolation.

Reset to Defaults

Soil Gas Concentration Data

| ENTER Chemical CAS No. (numbers only, no dashes) | ENTER Soil gas conc., $C_g$ ($\mu g/m^3$) | OR | ENTER Soil gas conc., $C_g$ (ppmv) | Chemical |
|---|---|---|---|---|
| 156592 | 3.60E+01 | | | cis-1,2-Dichloroethylene |

MORE ↓

| ENTER Depth below grade to bottom of enclosed space floor, $L_F$ (15 or 200 cm) | ENTER Soil gas sampling depth below grade, $L_s$ (cm) | ENTER Average soil temperature, $T_S$ ($^oC$) | ENTER Vadose zone SCS soil type (used to estimate soil vapor permeability) | OR | ENTER User-defined vadose zone soil vapor permeability, $k_v$ ($cm^2$) |
|---|---|---|---|---|---|
| 15 | 335 | 24 | SIL | | |

MORE ↓

| ENTER Vandose zone SCS soil type (Lookup Soil Parameters) | ENTER Vadose zone soil dry bulk density, $\rho_b^A$ ($g/cm^3$) | ENTER Vadose zone soil total porosity, $n^V$ (unitless) | ENTER Vadose zone soil water-filled porosity, $\theta_w^V$ ($cm^3/cm^3$) | ENTER Average vapor flow rate into bldg. (Leave blank to calculate) $Q_{soil}$ (L/m) |
|---|---|---|---|---|
| SIL | 1.49 | 0.439 | 0.18 | 5 |

MORE ↓

Lookup Receptor Parameters

| | ENTER Averaging time for carcinogens, $AT_C$ (yrs) | ENTER Averaging time for noncarcinogens, $AT_{NC}$ (yrs) | ENTER Exposure duration, ED (yrs) | ENTER Exposure frequency, EF (days/yr) | ENTER Exposure Time ET (hrs/day) | ENTER Air Exchange Rate ACH $(hour)^{-1}$ |
|---|---|---|---|---|---|---|
| NEW=> Residential | 70 | 26 | 26 | 350 | 24 (NEW) | 0.5 (NEW) |

END

## cis-1,2-Dichloroethylene

| Diffusivity in air, $D_a$ ($cm^2/s$) | Diffusivity in water, $D_w$ ($cm^2/s$) | Henry's law constant at reference temperature, H (atm-$m^3$/mol) | Henry's law constant reference temperature, $T_R$ ($^oC$) | Enthalpy of vaporization at the normal boiling point, $\Delta H_{v,b}$ (cal/mol) | Normal boiling point, $T_B$ ($^oK$) | Critical temperature, $T_C$ ($^oK$) | Unit risk factor, URF ($\mu g/m^3)^{-1}$ | Reference conc., RfC ($mg/m^3$) | Molecular weight, MW (g/mol) |
|---|---|---|---|---|---|---|---|---|---|
| 8.84E-02 | 1.13E-05 | 4.08E-03 | 25 | 7,192 | 333.65 | 544.00 | 0.0E+00 | 7.0E-03 | 96.94 |

**END**

**Scenario:** **Residential**

**Chemical:** **cis-1,2-Dichloroethylene**

| Source-building separation, $L_T$ (cm) | Vadose zone soil air-filled porosity, $\theta_a^V$ ($cm^3/cm^3$) | Vadose zone effective total fluid saturation, $S_{te}$ ($cm^3/cm^3$) | Vadose zone soil intrinsic permeability, $k_i$ ($cm^2$) | Vadose zone soil relative air permeability, $k_{rg}$ ($cm^2$) | Vadose zone soil effective vapor permeability, $k_v$ ($cm^2$) | Floor-wall seam perimeter, $X_{crack}$ (cm) | Soil gas conc. ($\mu g/m^3$) | Bldg. ventilation rate, $Q_{building}$ ($cm^3/s$) |
|---|---|---|---|---|---|---|---|---|
| 320 | 0.259 | 0.307 | 2.89E-09 | 0.798 | 2.30E-09 | 4,000 | 3.60E+01 | 3.39E+04 |

| Area of enclosed space below grade, $A_B$ ($cm^2$) | Crack-to-total area ratio, $\eta$ (unitless) | Crack depth below grade, $Z_{crack}$ (cm) | Enthalpy of vaporization at ave. soil temperature, $\Delta H_{v,TS}$ (cal/mol) | Henry's law constant at ave. soil temperature, $H_{TS}$ (atm-$m^3$/mol) | Henry's law constant at ave. soil temperature, $H'_{TS}$ (unitless) | Vapor viscosity at ave. soil temperature, $\mu_{TS}$ (g/cm-s) | Vadose zone effective diffusion coefficient, $D^{eff}_V$ ($cm^2/s$) | Diffusion path length, $L_d$ (cm) |
|---|---|---|---|---|---|---|---|---|
| 1.00E+06 | 5.00E-03 | 15 | 7,592 | 3.91E-03 | 1.60E-01 | 1.80E-04 | 5.10E-03 | 320 |

| Convection path length, $L_p$ (cm) | Source vapor conc., $C_{source}$ ($\mu g/m^3$) | Crack radius, $r_{crack}$ (cm) | Average vapor flow rate into bldg., $Q_{soil}$ ($cm^3/s$) | Crack effective diffusion coefficient, $D^{crack}$ ($cm^2/s$) | Area of crack, $A_{crack}$ ($cm^2$) | Exponent of equivalent foundation Peclet number, $exp(Pe^f)$ (unitless) | Infinite source indoor attenuation coefficient, $\alpha$ (unitless) | Infinite source bldg. conc., $C_{building}$ ($\mu g/m^3$) |
|---|---|---|---|---|---|---|---|---|
| 15 | 3.60E+01 | 1.25 | 8.33E+01 | 5.10E-03 | 5.00E+03 | 1.51E+14 | **3.95E-04** | 1.42E-02 |

| Unit risk factor, URF $(\mu g/m^3)^{-1}$ | Reference conc., RfC ($mg/m^3$) |
|---|---|
| NA | 7.0E-03 |

**END**

**Scenario:** **Residential**
**Chemical:** **cis-1,2-Dichloroethylene**

INCREMENTAL RISK CALCULATIONS:

| Incremental risk from vapor intrusion to indoor air, carcinogen (unitless) | Hazard quotient from vapor intrusion to indoor air, noncarcinogen (unitless) |
|---|---|
| **NA** | **1.9E-03** |

**MESSAGE SUMMARY BELOW:**

MESSAGE: Risk and/or hazard quotient is based on route-to-route extrapolation.

**END**

USEPA SG-SCREEN
Version 2.0, 04/2003

DTSC Modification
December 2014

# Department of Toxic Substances Control
# Vapor Intrusion Screening Model - Soil Gas

DATA ENTRY SHEET

**Scenario:** Commercial
**Chemical:** cis-1,2-Dichloroethylene

**Results Summary**

| Soil Gas Conc. ($\mu g/m^3$) | Attenuation Factor (unitless) | Indoor Air Conc. ($\mu g/m^3$) | Cancer Risk | Noncancer Hazard |
|---|---|---|---|---|
| 3.60E+01 | 2.0E-04 | 7.1E-03 | NA | 2.3E-04 |

MESSAGE: Risk and/or hazard quotient is based on route-to-route extrapolation.

Reset to Defaults

Soil Gas Concentration Data

| ENTER Chemical CAS No. (numbers only, no dashes) | ENTER Soil gas conc., $C_g$ ($\mu g/m^3$) | OR | ENTER Soil gas conc., $C_g$ (ppmv) | Chemical |
|---|---|---|---|---|
| 156592 | 3.60E+01 | | | cis-1,2-Dichloroethylene |

MORE ↓

| ENTER Depth below grade to bottom of enclosed space floor, $L_F$ (15 or 200 cm) | ENTER Soil gas sampling depth below grade, $L_s$ (cm) | ENTER Average soil temperature, $T_S$ ($^oC$) | ENTER Vadose zone SCS soil type (used to estimate soil vapor permeability) | OR | ENTER User-defined vadose zone soil vapor permeability, $k_v$ ($cm^2$) |
|---|---|---|---|---|---|
| 15 | 335 | 24 | SIL | | |

MORE ↓

| ENTER Vandose zone SCS soil type (Lookup Soil Parameters) | ENTER Vadose zone soil dry bulk density, $\rho_b^A$ ($g/cm^3$) | ENTER Vadose zone soil total porosity, $n^V$ (unitless) | ENTER Vadose zone soil water-filled porosity, $\theta_w^V$ ($cm^3/cm^3$) | ENTER Average vapor flow rate into bldg. (Leave blank to calculate) $Q_{soil}$ (L/m) |
|---|---|---|---|---|
| SIL | 1.49 | 0.439 | 0.18 | 5 |

MORE ↓

Lookup Receptor Parameters

| | ENTER Averaging time for carcinogens, $AT_C$ (yrs) | ENTER Averaging time for noncarcinogens, $AT_{NC}$ (yrs) | ENTER Exposure duration, ED (yrs) | ENTER Exposure frequency, EF (days/yr) | ENTER Exposure Time ET (hrs/day) | ENTER Air Exchange Rate ACH $(hour)^{-1}$ |
|---|---|---|---|---|---|---|
| NEW=> Commercial | 70 | 25 | 25 | 250 | 8 | 1 |
| | | | | | (NEW) | (NEW) |

END

## cis-1,2-Dichloroethylene

| Diffusivity in air, $D_a$ ($cm^2/s$) | Diffusivity in water, $D_w$ ($cm^2/s$) | Henry's law constant at reference temperature, H (atm-$m^3$/mol) | Henry's law constant reference temperature, $T_R$ ($^oC$) | Enthalpy of vaporization at the normal boiling point, $\Delta H_{v,b}$ (cal/mol) | Normal boiling point, $T_B$ ($^oK$) | Critical temperature, $T_C$ ($^oK$) | Unit risk factor, URF ($\mu g/m^3)^{-1}$ | Reference conc., RfC ($mg/m^3$) | Molecular weight, MW (g/mol) |
|---|---|---|---|---|---|---|---|---|---|
| 8.84E-02 | 1.13E-05 | 4.08E-03 | 25 | 7,192 | 333.65 | 544.00 | 0.0E+00 | 7.0E-03 | 96.94 |

**END**

INTERMEDIATE CALCULATIONS SHEET

**Scenario:** **Commercial**

**Chemical:** **cis-1,2-Dichloroethylene**

| Source-building separation, $L_T$ (cm) | Vadose zone soil air-filled porosity, $\theta_a^V$ ($cm^3/cm^3$) | Vadose zone effective total fluid saturation, $S_{te}$ ($cm^3/cm^3$) | Vadose zone soil intrinsic permeability, $k_i$ ($cm^2$) | Vadose zone soil relative air permeability, $k_{rg}$ ($cm^2$) | Vadose zone soil effective vapor permeability, $k_v$ ($cm^2$) | Floor-wall seam perimeter, $X_{crack}$ (cm) | Soil gas conc. ($\mu g/m^3$) | Bldg. ventilation rate, $Q_{building}$ ($cm^3/s$) |
|---|---|---|---|---|---|---|---|---|
| 320 | 0.259 | 0.307 | 2.89E-09 | 0.798 | 2.30E-09 | 4,000 | 3.60E+01 | 6.78E+04 |

| Area of enclosed space below grade, $A_B$ ($cm^2$) | Crack-to-total area ratio, $\eta$ (unitless) | Crack depth below grade, $Z_{crack}$ (cm) | Enthalpy of vaporization at ave. soil temperature, $\Delta H_{v,TS}$ (cal/mol) | Henry's law constant at ave. soil temperature, $H_{TS}$ (atm-$m^3$/mol) | Henry's law constant at ave. soil temperature, $H'_{TS}$ (unitless) | Vapor viscosity at ave. soil temperature, $\mu_{TS}$ (g/cm-s) | Vadose zone effective diffusion coefficient, $D^{eff}_V$ ($cm^2/s$) | Diffusion path length, $L_d$ (cm) |
|---|---|---|---|---|---|---|---|---|
| 1.00E+06 | 5.00E-03 | 15 | 7,592 | 3.91E-03 | 1.60E-01 | 1.80E-04 | 5.10E-03 | 320 |

| Convection path length, $L_p$ (cm) | Source vapor conc., $C_{source}$ ($\mu g/m^3$) | Crack radius, $r_{crack}$ (cm) | Average vapor flow rate into bldg., $Q_{soil}$ ($cm^3/s$) | Crack effective diffusion coefficient, $D^{crack}$ ($cm^2/s$) | Area of crack, $A_{crack}$ ($cm^2$) | Exponent of equivalent foundation Peclet number, $exp(Pe^f)$ (unitless) | Infinite source indoor attenuation coefficient, $\alpha$ (unitless) | Infinite source bldg. conc., $C_{building}$ ($\mu g/m^3$) |
|---|---|---|---|---|---|---|---|---|
| 15 | 3.60E+01 | 1.25 | 8.33E+01 | 5.10E-03 | 5.00E+03 | 1.51E+14 | **1.98E-04** | 7.11E-03 |

| Unit risk factor, URF $(\mu g/m^3)^{-1}$ | Reference conc., RfC ($mg/m^3$) |
|---|---|
| NA | 7.0E-03 |

**END**

**Scenario:** **Commercial**
**Chemical:** **cis-1,2-Dichloroethylene**

INCREMENTAL RISK CALCULATIONS:

| Incremental risk from vapor intrusion to indoor air, carcinogen (unitless) | Hazard quotient from vapor intrusion to indoor air, noncarcinogen (unitless) |
|---|---|
| **NA** | **2.3E-04** |

**MESSAGE SUMMARY BELOW:**

MESSAGE: Risk and/or hazard quotient is based on route-to-route extrapolation.

**END**

USEPA SG-SCREEN
Version 2.0, 04/2003

DTSC Modification
December 2014

# Department of Toxic Substances Control
# Vapor Intrusion Screening Model - Soil Gas

DATA ENTRY SHEET

**Scenario:** Residential
**Chemical:** Ethylbenzene

| Results Summary | | | | |
|---|---|---|---|---|
| Soil Gas Conc. ($\mu g/m^3$) | Attenuation Factor (unitless) | Indoor Air Conc. ($\mu g/m^3$) | Cancer Risk | Noncancer Hazard |
| 3.70E+01 | 1.2E-04 | 4.6E-03 | 4.1E-09 | 4.4E-06 |

Reset to Defaults

Soil Gas Concentration Data

| ENTER Chemical CAS No. (numbers only, no dashes) | ENTER Soil gas conc., $C_g$ ($\mu g/m^3$) | OR | ENTER Soil gas conc., $C_g$ (ppmv) | Chemical |
|---|---|---|---|---|
| 100414 | 3.70E+01 | | | Ethylbenzene |

MORE ↓

| ENTER Depth below grade to bottom of enclosed space floor, $L_F$ (15 or 200 cm) | ENTER Soil gas sampling depth below grade, $L_s$ (cm) | ENTER Average soil temperature, $T_S$ (°C) | ENTER Vadose zone SCS soil type (used to estimate soil vapor permeability) | OR | ENTER User-defined vadose zone soil vapor permeability, $k_v$ ($cm^2$) |
|---|---|---|---|---|---|
| 15 | 914 | 24 | SIL | | |

MORE ↓

| ENTER Vandose zone SCS soil type (Lookup Soil Parameters) | ENTER Vadose zone soil dry bulk density, $\rho_b^A$ ($g/cm^3$) | ENTER Vadose zone soil total porosity, $n^V$ (unitless) | ENTER Vadose zone soil water-filled porosity, $\theta_w^V$ ($cm^3/cm^3$) | ENTER Average vapor flow rate into bldg. (Leave blank to calculate) $Q_{soil}$ (L/m) |
|---|---|---|---|---|
| SIL | 1.49 | 0.439 | 0.18 | 5 |

MORE ↓

Lookup Receptor Parameters

| | ENTER Averaging time for carcinogens, $AT_C$ (yrs) | ENTER Averaging time for noncarcinogens, $AT_{NC}$ (yrs) | ENTER Exposure duration, ED (yrs) | ENTER Exposure frequency, EF (days/yr) | ENTER Exposure Time ET (hrs/day) | ENTER Air Exchange Rate ACH $(hour)^{-1}$ |
|---|---|---|---|---|---|---|
| NEW=> Residential | 70 | 26 | 26 | 350 | 24 | 0.5 |
| | | | | | (NEW) | (NEW) |

END

## Ethylbenzene

| Diffusivity in air, $D_a$ ($cm^2/s$) | Diffusivity in water, $D_w$ ($cm^2/s$) | Henry's law constant at reference temperature, H (atm-$m^3$/mol) | Henry's law constant reference temperature, $T_R$ ($^oC$) | Enthalpy of vaporization at the normal boiling point, $\Delta H_{v,b}$ (cal/mol) | Normal boiling point, $T_B$ ($^oK$) | Critical temperature, $T_C$ ($^oK$) | Unit risk factor, URF ($\mu g/m^3)^{-1}$ | Reference conc., RfC ($mg/m^3$) | Molecular weight, MW (g/mol) |
|---|---|---|---|---|---|---|---|---|---|
| 6.85E-02 | 8.46E-06 | 7.88E-03 | 25 | 8,501 | 409.34 | 617.20 | 2.5E-06 | 1.0E+00 | 106.17 |

**END**

INTERMEDIATE CALCULATIONS SHEET

**Scenario:** **Residential**

**Chemical:** **Ethylbenzene**

| Source-building separation, $L_T$ (cm) | Vadose zone soil air-filled porosity, $\theta_a^V$ ($cm^3/cm^3$) | Vadose zone effective total fluid saturation, $S_{te}$ ($cm^3/cm^3$) | Vadose zone soil intrinsic permeability, $k_i$ ($cm^2$) | Vadose zone soil relative air permeability, $k_{rg}$ ($cm^2$) | Vadose zone soil effective vapor permeability, $k_v$ ($cm^2$) | Floor-wall seam perimeter, $X_{crack}$ (cm) | Soil gas conc. ($\mu g/m^3$) | Bldg. ventilation rate, $Q_{building}$ ($cm^3/s$) |
|---|---|---|---|---|---|---|---|---|
| 899 | 0.259 | 0.307 | 2.89E-09 | 0.798 | 2.30E-09 | 4,000 | 3.70E+01 | 3.39E+04 |

| Area of enclosed space below grade, $A_B$ ($cm^2$) | Crack-to-total area ratio, $\eta$ (unitless) | Crack depth below grade, $Z_{crack}$ (cm) | Enthalpy of vaporization at ave. soil temperature, $\Delta H_{v,TS}$ (cal/mol) | Henry's law constant at ave. soil temperature, $H_{TS}$ (atm-$m^3$/mol) | Henry's law constant at ave. soil temperature, $H'_{TS}$ (unitless) | Vapor viscosity at ave. soil temperature, $\mu_{TS}$ (g/cm-s) | Vadose zone effective diffusion coefficient, $D^{eff}_V$ ($cm^2/s$) | Diffusion path length, $L_d$ (cm) |
|---|---|---|---|---|---|---|---|---|
| 1.00E+06 | 5.00E-03 | 15 | 9,994 | 7.45E-03 | 3.05E-01 | 1.80E-04 | 3.95E-03 | 899 |

| Convection path length, $L_p$ (cm) | Source vapor conc., $C_{source}$ ($\mu g/m^3$) | Crack radius, $r_{crack}$ (cm) | Average vapor flow rate into bldg., $Q_{soil}$ ($cm^3/s$) | Crack effective diffusion coefficient, $D^{crack}$ ($cm^2/s$) | Area of crack, $A_{crack}$ ($cm^2$) | Exponent of equivalent foundation Peclet number, $exp(Pe^f)$ (unitless) | Infinite source indoor attenuation coefficient, $\alpha$ (unitless) | Infinite source bldg. conc., $C_{building}$ ($\mu g/m^3$) |
|---|---|---|---|---|---|---|---|---|
| 15 | 3.70E+01 | 1.25 | 8.33E+01 | 3.95E-03 | 5.00E+03 | 2.05E+18 | **1.23E-04** | 4.56E-03 |

| Unit risk factor, URF $(\mu g/m^3)^{-1}$ | Reference conc., RfC ($mg/m^3$) |
|---|---|
| 2.5E-06 | 1.0E+00 |

**END**

**Scenario:** **Residential**
**Chemical:** **Ethylbenzene**

INCREMENTAL RISK CALCULATIONS:

| Incremental risk from vapor intrusion to indoor air, carcinogen (unitless) | Hazard quotient from vapor intrusion to indoor air, noncarcinogen (unitless) |
|---|---|
| **4.1E-09** | **4.4E-06** |

**MESSAGE SUMMARY BELOW:**

**END**

USEPA SG-SCREEN
Version 2.0, 04/2003

DTSC Modification
December 2014

# Department of Toxic Substances Control
# Vapor Intrusion Screening Model - Soil Gas

DATA ENTRY SHEET

**Scenario:** Commercial
**Chemical:** Ethylbenzene

**Results Summary**

| Soil Gas Conc. ($\mu g/m^3$) | Attenuation Factor (unitless) | Indoor Air Conc. ($\mu g/m^3$) | Cancer Risk | Noncancer Hazard |
|---|---|---|---|---|
| 3.70E+01 | 6.2E-05 | 2.3E-03 | 4.6E-10 | 5.2E-07 |

Reset to Defaults

Soil Gas Concentration Data

| ENTER Chemical CAS No. (numbers only, no dashes) | ENTER Soil gas conc., $C_g$ ($\mu g/m^3$) | OR | ENTER Soil gas conc., $C_g$ (ppmv) | Chemical |
|---|---|---|---|---|
| 100414 | 3.70E+01 | | | Ethylbenzene |

MORE ↓

| ENTER Depth below grade to bottom of enclosed space floor, $L_F$ (15 or 200 cm) | ENTER Soil gas sampling depth below grade, $L_s$ (cm) | ENTER Average soil temperature, $T_S$ (°C) | ENTER Vadose zone SCS soil type (used to estimate soil vapor permeability) | OR | ENTER User-defined vadose zone soil vapor permeability, $k_v$ ($cm^2$) |
|---|---|---|---|---|---|
| 15 | 914 | 24 | SIL | | |

MORE ↓

| ENTER Vandose zone SCS soil type (Lookup Soil Parameters) | ENTER Vadose zone soil dry bulk density, $\rho_b^A$ ($g/cm^3$) | ENTER Vadose zone soil total porosity, $n^V$ (unitless) | ENTER Vadose zone soil water-filled porosity, $\theta_w^V$ ($cm^3/cm^3$) | ENTER Average vapor flow rate into bldg. (Leave blank to calculate) $Q_{soil}$ (L/m) |
|---|---|---|---|---|
| SIL | 1.49 | 0.439 | 0.18 | 5 |

MORE ↓

Lookup Receptor Parameters

| | ENTER Averaging time for carcinogens, $AT_C$ (yrs) | ENTER Averaging time for noncarcinogens, $AT_{NC}$ (yrs) | ENTER Exposure duration, ED (yrs) | ENTER Exposure frequency, EF (days/yr) | ENTER Exposure Time ET (hrs/day) | ENTER Air Exchange Rate ACH $(hour)^{-1}$ |
|---|---|---|---|---|---|---|
| NEW=> Commercial | 70 | 25 | 25 | 250 | 8 | 1 |
| | | | | | (NEW) | (NEW) |

END

## Ethylbenzene

| Diffusivity in air, $D_a$ ($cm^2/s$) | Diffusivity in water, $D_w$ ($cm^2/s$) | Henry's law constant at reference temperature, H (atm-$m^3$/mol) | Henry's law constant reference temperature, $T_R$ ($^oC$) | Enthalpy of vaporization at the normal boiling point, $\Delta H_{v,b}$ (cal/mol) | Normal boiling point, $T_B$ ($^oK$) | Critical temperature, $T_C$ ($^oK$) | Unit risk factor, URF ($\mu g/m^3)^{-1}$ | Reference conc., RfC ($mg/m^3$) | Molecular weight, MW (g/mol) |
|---|---|---|---|---|---|---|---|---|---|
| 6.85E-02 | 8.46E-06 | 7.88E-03 | 25 | 8,501 | 409.34 | 617.20 | 2.5E-06 | 1.0E+00 | 106.17 |

**END**

INTERMEDIATE CALCULATIONS SHEET

**Scenario:** **Commercial**

**Chemical:** **Ethylbenzene**

| Source-building separation, $L_T$ (cm) | Vadose zone soil air-filled porosity, $\theta_a^V$ ($cm^3/cm^3$) | Vadose zone effective total fluid saturation, $S_{te}$ ($cm^3/cm^3$) | Vadose zone soil intrinsic permeability, $k_i$ ($cm^2$) | Vadose zone soil relative air permeability, $k_{rg}$ ($cm^2$) | Vadose zone soil effective vapor permeability, $k_v$ ($cm^2$) | Floor-wall seam perimeter, $X_{crack}$ (cm) | Soil gas conc. ($\mu g/m^3$) | Bldg. ventilation rate, $Q_{building}$ ($cm^3/s$) |
|---|---|---|---|---|---|---|---|---|
| 899 | 0.259 | 0.307 | 2.89E-09 | 0.798 | 2.30E-09 | 4,000 | 3.70E+01 | 6.78E+04 |

| Area of enclosed space below grade, $A_B$ ($cm^2$) | Crack-to-total area ratio, $\eta$ (unitless) | Crack depth below grade, $Z_{crack}$ (cm) | Enthalpy of vaporization at ave. soil temperature, $\Delta H_{v,TS}$ (cal/mol) | Henry's law constant at ave. soil temperature, $H_{TS}$ (atm-$m^3$/mol) | Henry's law constant at ave. soil temperature, $H'_{TS}$ (unitless) | Vapor viscosity at ave. soil temperature, $\mu_{TS}$ (g/cm-s) | Vadose zone effective diffusion coefficient, $D^{eff}_V$ ($cm^2/s$) | Diffusion path length, $L_d$ (cm) |
|---|---|---|---|---|---|---|---|---|
| 1.00E+06 | 5.00E-03 | 15 | 9,994 | 7.45E-03 | 3.05E-01 | 1.80E-04 | 3.95E-03 | 899 |

| Convection path length, $L_p$ (cm) | Source vapor conc., $C_{source}$ ($\mu g/m^3$) | Crack radius, $r_{crack}$ (cm) | Average vapor flow rate into bldg., $Q_{soil}$ ($cm^3/s$) | Crack effective diffusion coefficient, $D^{crack}$ ($cm^2/s$) | Area of crack, $A_{crack}$ ($cm^2$) | Exponent of equivalent foundation Peclet number, $exp(Pe^f)$ (unitless) | Infinite source indoor attenuation coefficient, $\alpha$ (unitless) | Infinite source bldg. conc., $C_{building}$ ($\mu g/m^3$) |
|---|---|---|---|---|---|---|---|---|
| 15 | 3.70E+01 | 1.25 | 8.33E+01 | 3.95E-03 | 5.00E+03 | 2.05E+18 | **6.16E-05** | 2.28E-03 |

| Unit risk factor, URF $(\mu g/m^3)^{-1}$ | Reference conc., RfC ($mg/m^3$) |
|---|---|
| 2.5E-06 | 1.0E+00 |

**END**

**Scenario:** **Commercial**
**Chemical:** **Ethylbenzene**

INCREMENTAL RISK CALCULATIONS:

| Incremental risk from vapor intrusion to indoor air, carcinogen (unitless) | Hazard quotient from vapor intrusion to indoor air, noncarcinogen (unitless) |
|---|---|
| **4.6E-10** | **5.2E-07** |

**MESSAGE SUMMARY BELOW:**

**END**

USEPA SG-SCREEN
Version 2.0, 04/2003

DTSC Modification
December 2014

# Department of Toxic Substances Control
# Vapor Intrusion Screening Model - Soil Gas

DATA ENTRY SHEET

**Scenario:** Residential
**Chemical:** Hexane

| Results Summary | | | | |
|---|---|---|---|---|
| Soil Gas Conc. ($\mu g/m^3$) | Attenuation Factor (unitless) | Indoor Air Conc. ($\mu g/m^3$) | Cancer Risk | Noncancer Hazard |
| 6.40E+01 | 2.5E-04 | 1.6E-02 | NA | 2.2E-05 |

Reset to Defaults

Soil Gas Concentration Data

| ENTER Chemical CAS No. (numbers only, no dashes) | ENTER Soil gas conc., $C_g$ ($\mu g/m^3$) | OR | ENTER Soil gas conc., $C_g$ (ppmv) | Chemical |
|---|---|---|---|---|
| 110543 | 6.40E+01 | | | Hexane |

MORE ↓

| ENTER Depth below grade to bottom of enclosed space floor, $L_F$ (15 or 200 cm) | ENTER Soil gas sampling depth below grade, $L_s$ (cm) | ENTER Average soil temperature, $T_S$ ($^oC$) | ENTER Vadose zone SCS soil type (used to estimate soil vapor permeability) | OR | ENTER User-defined vadose zone soil vapor permeability, $k_v$ ($cm^2$) |
|---|---|---|---|---|---|
| 15 | 457 | 24 | SIL | | |

MORE ↓

| ENTER Vandose zone SCS soil type (Lookup Soil Parameters) | ENTER Vadose zone soil dry bulk density, $\rho_b^A$ ($g/cm^3$) | ENTER Vadose zone soil total porosity, $n^V$ (unitless) | ENTER Vadose zone soil water-filled porosity, $\theta_w^V$ ($cm^3/cm^3$) | ENTER Average vapor flow rate into bldg. (Leave blank to calculate) $Q_{soil}$ (L/m) |
|---|---|---|---|---|
| SIL | 1.49 | 0.439 | 0.18 | 5 |

MORE ↓

Lookup Receptor Parameters

| | ENTER Averaging time for carcinogens, $AT_C$ (yrs) | ENTER Averaging time for noncarcinogens, $AT_{NC}$ (yrs) | ENTER Exposure duration, ED (yrs) | ENTER Exposure frequency, EF (days/yr) | ENTER Exposure Time ET (hrs/day) | ENTER Air Exchange Rate ACH $(hour)^{-1}$ |
|---|---|---|---|---|---|---|
| NEW=> Residential | 70 | 26 | 26 | 350 | 24 | 0.5 |
| | | | | | (NEW) | (NEW) |

END

**Hexane**

| Diffusivity in air, $D_a$ ($cm^2/s$) | Diffusivity in water, $D_w$ ($cm^2/s$) | Henry's law constant at reference temperature, H (atm-$m^3$/mol) | Henry's law constant reference temperature, $T_R$ ($^oC$) | Enthalpy of vaporization at the normal boiling point, $\Delta H_{v,b}$ (cal/mol) | Normal boiling point, $T_B$ ($^oK$) | Critical temperature, $T_C$ ($^oK$) | Unit risk factor, URF ($\mu g/m^3)^{-1}$ | Reference conc., RfC ($mg/m^3$) | Molecular weight, MW (g/mol) |
|---|---|---|---|---|---|---|---|---|---|
| 7.31E-02 | 8.17E-06 | 1.80E+00 | 25 | 6,895 | 341.70 | 508.00 | 0.0E+00 | 7.0E-01 | 86.18 |

**END**

INTERMEDIATE CALCULATIONS SHEET

**Scenario:** **Residential**

**Chemical:** **Hexane**

| Source-building separation, $L_T$ (cm) | Vadose zone soil air-filled porosity, $\theta_a^V$ ($cm^3/cm^3$) | Vadose zone effective total fluid saturation, $S_{te}$ ($cm^3/cm^3$) | Vadose zone soil intrinsic permeability, $k_i$ ($cm^2$) | Vadose zone soil relative air permeability, $k_{rg}$ ($cm^2$) | Vadose zone soil effective vapor permeability, $k_v$ ($cm^2$) | Floor-wall seam perimeter, $X_{crack}$ (cm) | Soil gas conc. ($\mu g/m^3$) | Bldg. ventilation rate, $Q_{building}$ ($cm^3/s$) |
|---|---|---|---|---|---|---|---|---|
| 442 | 0.259 | 0.307 | 2.89E-09 | 0.798 | 2.30E-09 | 4,000 | 6.40E+01 | 3.39E+04 |

| Area of enclosed space below grade, $A_B$ ($cm^2$) | Crack-to-total area ratio, $\eta$ (unitless) | Crack depth below grade, $Z_{crack}$ (cm) | Enthalpy of vaporization at ave. soil temperature, $\Delta H_{v,TS}$ (cal/mol) | Henry's law constant at ave. soil temperature, $H_{TS}$ (atm-$m^3$/mol) | Henry's law constant at ave. soil temperature, $H'_{TS}$ (unitless) | Vapor viscosity at ave. soil temperature, $\mu_{TS}$ (g/cm-s) | Vadose zone effective diffusion coefficient, $D^{eff}_V$ ($cm^2/s$) | Diffusion path length, $L_d$ (cm) |
|---|---|---|---|---|---|---|---|---|
| 1.00E+06 | 5.00E-03 | 15 | 7,549 | 1.72E+00 | 7.07E+01 | 1.80E-04 | 4.22E-03 | 442 |

| Convection path length, $L_p$ (cm) | Source vapor conc., $C_{source}$ ($\mu g/m^3$) | Crack radius, $r_{crack}$ (cm) | Average vapor flow rate into bldg., $Q_{soil}$ ($cm^3/s$) | Crack effective diffusion coefficient, $D^{crack}$ ($cm^2/s$) | Area of crack, $A_{crack}$ ($cm^2$) | Exponent of equivalent foundation Peclet number, $exp(Pe^f)$ (unitless) | Infinite source indoor attenuation coefficient, $\alpha$ (unitless) | Infinite source bldg. conc., $C_{building}$ ($\mu g/m^3$) |
|---|---|---|---|---|---|---|---|---|
| 15 | 6.40E+01 | 1.25 | 8.33E+01 | 4.22E-03 | 5.00E+03 | 1.42E+17 | **2.53E-04** | 1.62E-02 |

| Unit risk factor, URF $(\mu g/m^3)^{-1}$ | Reference conc., RfC ($mg/m^3$) |
|---|---|
| NA | 7.0E-01 |

**END**

RESULTS SHEET

**Scenario:** **Residential**
**Chemical:** **Hexane**

INCREMENTAL RISK CALCULATIONS:

| Incremental risk from vapor intrusion to indoor air, carcinogen (unitless) | Hazard quotient from vapor intrusion to indoor air, noncarcinogen (unitless) |
|---|---|
| **NA** | **2.2E-05** |

**MESSAGE SUMMARY BELOW:**

**END**

USEPA SG-SCREEN
Version 2.0, 04/2003

DTSC Modification
December 2014

# Department of Toxic Substances Control
# Vapor Intrusion Screening Model - Soil Gas

DATA ENTRY SHEET

**Scenario:** Commercial
**Chemical:** Hexane

| Results Summary | | | | |
|---|---|---|---|---|
| Soil Gas Conc. ($\mu g/m^3$) | Attenuation Factor (unitless) | Indoor Air Conc. ($\mu g/m^3$) | Cancer Risk | Noncancer Hazard |
| 6.40E+01 | 1.3E-04 | 8.1E-03 | NA | 2.6E-06 |

Reset to Defaults

Soil Gas Concentration Data

| ENTER Chemical CAS No. (numbers only, no dashes) | ENTER Soil gas conc., $C_g$ ($\mu g/m^3$) | OR | ENTER Soil gas conc., $C_g$ (ppmv) | Chemical |
|---|---|---|---|---|
| 110543 | 6.40E+01 | | | Hexane |

MORE ↓

| ENTER Depth below grade to bottom of enclosed space floor, $L_F$ (15 or 200 cm) | ENTER Soil gas sampling depth below grade, $L_s$ (cm) | ENTER Average soil temperature, $T_S$ ($^oC$) | ENTER Vadose zone SCS soil type (used to estimate soil vapor permeability) | OR | ENTER User-defined vadose zone soil vapor permeability, $k_v$ ($cm^2$) |
|---|---|---|---|---|---|
| 15 | 457 | 24 | SIL | | |

MORE ↓

| ENTER Vandose zone SCS soil type (Lookup Soil Parameters) | ENTER Vadose zone soil dry bulk density, $\rho_b^A$ ($g/cm^3$) | ENTER Vadose zone soil total porosity, $n^V$ (unitless) | ENTER Vadose zone soil water-filled porosity, $\theta_w^V$ ($cm^3/cm^3$) | ENTER Average vapor flow rate into bldg. (Leave blank to calculate) $Q_{soil}$ (L/m) |
|---|---|---|---|---|
| SIL | 1.49 | 0.439 | 0.18 | 5 |

MORE ↓

Lookup Receptor Parameters

| | ENTER Averaging time for carcinogens, $AT_C$ (yrs) | ENTER Averaging time for noncarcinogens, $AT_{NC}$ (yrs) | ENTER Exposure duration, ED (yrs) | ENTER Exposure frequency, EF (days/yr) | ENTER Exposure Time ET (hrs/day) | ENTER Air Exchange Rate ACH $(hour)^{-1}$ |
|---|---|---|---|---|---|---|
| NEW=> Commercial | 70 | 25 | 25 | 250 | 8 | 1 |
| | | | | | (NEW) | (NEW) |

END

**Hexane**

| Diffusivity in air, $D_a$ ($cm^2/s$) | Diffusivity in water, $D_w$ ($cm^2/s$) | Henry's law constant at reference temperature, H (atm-$m^3$/mol) | Henry's law constant reference temperature, $T_R$ ($^oC$) | Enthalpy of vaporization at the normal boiling point, $\Delta H_{v,b}$ (cal/mol) | Normal boiling point, $T_B$ ($^oK$) | Critical temperature, $T_C$ ($^oK$) | Unit risk factor, URF ($\mu g/m^3)^{-1}$ | Reference conc., RfC ($mg/m^3$) | Molecular weight, MW (g/mol) |
|---|---|---|---|---|---|---|---|---|---|
| 7.31E-02 | 8.17E-06 | 1.80E+00 | 25 | 6,895 | 341.70 | 508.00 | 0.0E+00 | 7.0E-01 | 86.18 |

**END**

**Scenario:** **Commercial**

**Chemical:** **Hexane**

| Source-building separation, $L_T$ (cm) | Vadose zone soil air-filled porosity, $\theta_a^V$ ($cm^3/cm^3$) | Vadose zone effective total fluid saturation, $S_{te}$ ($cm^3/cm^3$) | Vadose zone soil intrinsic permeability, $k_i$ ($cm^2$) | Vadose zone soil relative air permeability, $k_{rg}$ ($cm^2$) | Vadose zone soil effective vapor permeability, $k_v$ ($cm^2$) | Floor-wall seam perimeter, $X_{crack}$ (cm) | Soil gas conc. ($\mu g/m^3$) | Bldg. ventilation rate, $Q_{building}$ ($cm^3/s$) |
|---|---|---|---|---|---|---|---|---|
| 442 | 0.259 | 0.307 | 2.89E-09 | 0.798 | 2.30E-09 | 4,000 | 6.40E+01 | 6.78E+04 |

| Area of enclosed space below grade, $A_B$ ($cm^2$) | Crack-to-total area ratio, $\eta$ (unitless) | Crack depth below grade, $Z_{crack}$ (cm) | Enthalpy of vaporization at ave. soil temperature, $\Delta H_{v,TS}$ (cal/mol) | Henry's law constant at ave. soil temperature, $H_{TS}$ (atm-$m^3$/mol) | Henry's law constant at ave. soil temperature, $H'_{TS}$ (unitless) | Vapor viscosity at ave. soil temperature, $\mu_{TS}$ (g/cm-s) | Vadose zone effective diffusion coefficient, $D^{eff}_V$ ($cm^2/s$) | Diffusion path length, $L_d$ (cm) |
|---|---|---|---|---|---|---|---|---|
| 1.00E+06 | 5.00E-03 | 15 | 7,549 | 1.72E+00 | 7.07E+01 | 1.80E-04 | 4.22E-03 | 442 |

| Convection path length, $L_p$ (cm) | Source vapor conc., $C_{source}$ ($\mu g/m^3$) | Crack radius, $r_{crack}$ (cm) | Average vapor flow rate into bldg., $Q_{soil}$ ($cm^3/s$) | Crack effective diffusion coefficient, $D^{crack}$ ($cm^2/s$) | Area of crack, $A_{crack}$ ($cm^2$) | Exponent of equivalent foundation Peclet number, $exp(Pe^f)$ (unitless) | Infinite source indoor attenuation coefficient, $\alpha$ (unitless) | Infinite source bldg. conc., $C_{building}$ ($\mu g/m^3$) |
|---|---|---|---|---|---|---|---|---|
| 15 | 6.40E+01 | 1.25 | 8.33E+01 | 4.22E-03 | 5.00E+03 | 1.42E+17 | **1.26E-04** | 8.09E-03 |

| Unit risk factor, URF $(\mu g/m^3)^{-1}$ | Reference conc., RfC ($mg/m^3$) |
|---|---|
| NA | 7.0E-01 |

**END**

RESULTS SHEET

**Scenario:** **Commercial**
**Chemical:** **Hexane**

INCREMENTAL RISK CALCULATIONS:

| Incremental risk from vapor intrusion to indoor air, carcinogen (unitless) | Hazard quotient from vapor intrusion to indoor air, noncarcinogen (unitless) |
|---|---|
| **NA** | **2.6E-06** |

**MESSAGE SUMMARY BELOW:**

**END**

USEPA SG-SCREEN
Version 2.0, 04/2003

DTSC Modification
December 2014

# Department of Toxic Substances Control
# Vapor Intrusion Screening Model - Soil Gas

DATA ENTRY SHEET

**Scenario:** Residential
**Chemical:** 1,1,2-Trichloro-1,2,2-trifluoroethane

**Results Summary**

| Soil Gas Conc. ($\mu g/m^3$) | Attenuation Factor (unitless) | Indoor Air Conc. ($\mu g/m^3$) | Cancer Risk | Noncancer Hazard |
|---|---|---|---|---|
| 1.00E+01 | 6.9E-05 | 6.9E-04 | NA | 2.2E-08 |

Reset to Defaults

Soil Gas Concentration Data

| ENTER Chemical CAS No. (numbers only, no dashes) | ENTER Soil gas conc., $C_g$ ($\mu g/m^3$) | OR | ENTER Soil gas conc., $C_g$ (ppmv) | Chemical |
|---|---|---|---|---|
| 76131 | 1.00E+01 | | | 1,1,2-Trichloro-1,2,2-trifluoroethane |

MORE ↓

| ENTER Depth below grade to bottom of enclosed space floor, $L_F$ (15 or 200 cm) | ENTER Soil gas sampling depth below grade, $L_s$ (cm) | ENTER Average soil temperature, $T_S$ ($^oC$) | ENTER Vadose zone SCS soil type (used to estimate soil vapor permeability) | OR | ENTER User-defined vadose zone soil vapor permeability, $k_v$ ($cm^2$) |
|---|---|---|---|---|---|
| 15 | 914 | 24 | SIL | | |

MORE ↓

| ENTER Vandose zone SCS soil type (Lookup Soil Parameters) | ENTER Vadose zone soil dry bulk density, $\rho_b^A$ ($g/cm^3$) | ENTER Vadose zone soil total porosity, $n^V$ (unitless) | ENTER Vadose zone soil water-filled porosity, $\theta_w^V$ ($cm^3/cm^3$) | ENTER Average vapor flow rate into bldg. (Leave blank to calculate) $Q_{soil}$ (L/m) |
|---|---|---|---|---|
| SIL | 1.49 | 0.439 | 0.18 | 5 |

MORE ↓

Lookup Receptor Parameters

| | ENTER Averaging time for carcinogens, $AT_C$ (yrs) | ENTER Averaging time for noncarcinogens, $AT_{NC}$ (yrs) | ENTER Exposure duration, ED (yrs) | ENTER Exposure frequency, EF (days/yr) | ENTER Exposure Time ET (hrs/day) | ENTER Air Exchange Rate ACH $(hour)^{-1}$ |
|---|---|---|---|---|---|---|
| NEW=> Residential | 70 | 26 | 26 | 350 | 24 | 0.5 |
| | | | | | (NEW) | (NEW) |

END

## 1,1,2-Trichloro-1,2,2-trifluoroethane

| Diffusivity in air, $D_a$ ($cm^2/s$) | Diffusivity in water, $D_w$ ($cm^2/s$) | Henry's law constant at reference temperature, H (atm-$m^3$/mol) | Henry's law constant reference temperature, $T_R$ ($^oC$) | Enthalpy of vaporization at the normal boiling point, $\Delta H_{v,b}$ (cal/mol) | Normal boiling point, $T_B$ ($^oK$) | Critical temperature, $T_C$ ($^oK$) | Unit risk factor, URF ($\mu g/m^3)^{-1}$ | Reference conc., RfC ($mg/m^3$) | Molecular weight, MW (g/mol) |
|---|---|---|---|---|---|---|---|---|---|
| 3.76E-02 | 8.59E-06 | 5.26E-01 | 25 | 6,463 | 320.70 | 487.30 | 0.0E+00 | 3.0E+01 | 187.38 |

**END**

**Scenario:** **Residential**

**Chemical:** **1,1,2-Trichloro-1,2,2-trifluoroethane**

| Source-building separation, $L_T$ (cm) | Vadose zone soil air-filled porosity, $\theta_a^V$ ($cm^3/cm^3$) | Vadose zone effective total fluid saturation, $S_{te}$ ($cm^3/cm^3$) | Vadose zone soil intrinsic permeability, $k_i$ ($cm^2$) | Vadose zone soil relative air permeability, $k_{rg}$ ($cm^2$) | Vadose zone soil effective vapor permeability, $k_v$ ($cm^2$) | Floor-wall seam perimeter, $X_{crack}$ (cm) | Soil gas conc. ($\mu g/m^3$) | Bldg. ventilation rate, $Q_{building}$ ($cm^3/s$) |
|---|---|---|---|---|---|---|---|---|
| 899 | 0.259 | 0.307 | 2.89E-09 | 0.798 | 2.30E-09 | 4,000 | 1.00E+01 | 3.39E+04 |

| Area of enclosed space below grade, $A_B$ ($cm^2$) | Crack-to-total area ratio, $\eta$ (unitless) | Crack depth below grade, $Z_{crack}$ (cm) | Enthalpy of vaporization at ave. soil temperature, $\Delta H_{v,TS}$ (cal/mol) | Henry's law constant at ave. soil temperature, $H_{TS}$ (atm-$m^3$/mol) | Henry's law constant at ave. soil temperature, $H'_{TS}$ (unitless) | Vapor viscosity at ave. soil temperature, $\mu_{TS}$ (g/cm-s) | Vadose zone effective diffusion coefficient, $D^{eff}_V$ ($cm^2/s$) | Diffusion path length, $L_d$ (cm) |
|---|---|---|---|---|---|---|---|---|
| 1.00E+06 | 5.00E-03 | 15 | 6,787 | 5.06E-01 | 2.08E+01 | 1.80E-04 | 2.17E-03 | 899 |

| Convection path length, $L_p$ (cm) | Source vapor conc., $C_{source}$ ($\mu g/m^3$) | Crack radius, $r_{crack}$ (cm) | Average vapor flow rate into bldg., $Q_{soil}$ ($cm^3/s$) | Crack effective diffusion coefficient, $D^{crack}$ ($cm^2/s$) | Area of crack, $A_{crack}$ ($cm^2$) | Exponent of equivalent foundation Peclet number, $exp(Pe^f)$ (unitless) | Infinite source indoor attenuation coefficient, $\alpha$ (unitless) | Infinite source bldg. conc., $C_{building}$ ($\mu g/m^3$) |
|---|---|---|---|---|---|---|---|---|
| 15 | 1.00E+01 | 1.25 | 8.33E+01 | 2.17E-03 | 5.00E+03 | 2.40E+33 | **6.92E-05** | 6.92E-04 |

| Unit risk factor, URF $(\mu g/m^3)^{-1}$ | Reference conc., RfC ($mg/m^3$) |
|---|---|
| NA | 3.0E+01 |

**END**

**Scenario:** **Residential**
**Chemical:** **1,1,2-Trichloro-1,2,2-trifluoroethane**

INCREMENTAL RISK CALCULATIONS:

| Incremental risk from vapor intrusion to indoor air, carcinogen (unitless) | Hazard quotient from vapor intrusion to indoor air, noncarcinogen (unitless) |
|---|---|
| **NA** | **2.2E-08** |

**MESSAGE SUMMARY BELOW:**

**END**

USEPA SG-SCREEN
Version 2.0, 04/2003

DTSC Modification
December 2014

# Department of Toxic Substances Control
# Vapor Intrusion Screening Model - Soil Gas

DATA ENTRY SHEET

**Scenario:** Commercial
**Chemical:** 1,1,2-Trichloro-1,2,2-trifluoroethane

| Results Summary | | | | |
|---|---|---|---|---|
| Soil Gas Conc. ($\mu g/m^3$) | Attenuation Factor (unitless) | Indoor Air Conc. ($\mu g/m^3$) | Cancer Risk | Noncancer Hazard |
| 1.00E+01 | 3.5E-05 | 3.5E-04 | NA | 2.6E-09 |

MESSAGE: Attenuation factor < 6E-05 is unreasonably low.

Reset to Defaults

Soil Gas Concentration Data

| ENTER Chemical CAS No. (numbers only, no dashes) | ENTER Soil gas conc., $C_g$ ($\mu g/m^3$) | OR | ENTER Soil gas conc., $C_g$ (ppmv) | Chemical |
|---|---|---|---|---|
| 76131 | 1.00E+01 | | | 1,1,2-Trichloro-1,2,2-trifluoroethane |

MORE ↓

| ENTER Depth below grade to bottom of enclosed space floor, $L_F$ (15 or 200 cm) | ENTER Soil gas sampling depth below grade, $L_s$ (cm) | ENTER Average soil temperature, $T_S$ ($^oC$) | ENTER Vadose zone SCS soil type (used to estimate soil vapor permeability) | OR | ENTER User-defined vadose zone soil vapor permeability, $k_v$ ($cm^2$) |
|---|---|---|---|---|---|
| 15 | 914 | 24 | SIL | | |

MORE ↓

| ENTER Vandose zone SCS soil type (Lookup Soil Parameters) | ENTER Vadose zone soil dry bulk density, $\rho_b^A$ ($g/cm^3$) | ENTER Vadose zone soil total porosity, $n^V$ (unitless) | ENTER Vadose zone soil water-filled porosity, $\theta_w^V$ ($cm^3/cm^3$) | ENTER Average vapor flow rate into bldg. (Leave blank to calculate) $Q_{soil}$ (L/m) |
|---|---|---|---|---|
| SIL | 1.49 | 0.439 | 0.18 | 5 |

MORE ↓

Lookup Receptor Parameters

| | ENTER Averaging time for carcinogens, $AT_C$ (yrs) | ENTER Averaging time for noncarcinogens, $AT_{NC}$ (yrs) | ENTER Exposure duration, ED (yrs) | ENTER Exposure frequency, EF (days/yr) | ENTER Exposure Time ET (hrs/day) | ENTER Air Exchange Rate ACH $(hour)^{-1}$ |
|---|---|---|---|---|---|---|
| NEW=> Commercial | 70 | 25 | 25 | 250 | 8 | 1 |
| | | | | | (NEW) | (NEW) |

END

## 1,1,2-Trichloro-1,2,2-trifluoroethane

| Diffusivity in air, $D_a$ ($cm^2/s$) | Diffusivity in water, $D_w$ ($cm^2/s$) | Henry's law constant at reference temperature, H (atm-$m^3$/mol) | Henry's law constant reference temperature, $T_R$ ($^oC$) | Enthalpy of vaporization at the normal boiling point, $\Delta H_{v,b}$ (cal/mol) | Normal boiling point, $T_B$ ($^oK$) | Critical temperature, $T_C$ ($^oK$) | Unit risk factor, URF ($\mu g/m^3)^{-1}$ | Reference conc., RfC ($mg/m^3$) | Molecular weight, MW (g/mol) |
|---|---|---|---|---|---|---|---|---|---|
| 3.76E-02 | 8.59E-06 | 5.26E-01 | 25 | 6,463 | 320.70 | 487.30 | 0.0E+00 | 3.0E+01 | 187.38 |

**END**

**Scenario:** **Commercial**

**Chemical:** **1,1,2-Trichloro-1,2,2-trifluoroethane**

| Source-building separation, $L_T$ (cm) | Vadose zone soil air-filled porosity, $\theta_a^V$ ($cm^3/cm^3$) | Vadose zone effective total fluid saturation, $S_{te}$ ($cm^3/cm^3$) | Vadose zone soil intrinsic permeability, $k_i$ ($cm^2$) | Vadose zone soil relative air permeability, $k_{rg}$ ($cm^2$) | Vadose zone soil effective vapor permeability, $k_v$ ($cm^2$) | Floor-wall seam perimeter, $X_{crack}$ (cm) | Soil gas conc. ($\mu g/m^3$) | Bldg. ventilation rate, $Q_{building}$ ($cm^3/s$) |
|---|---|---|---|---|---|---|---|---|
| 899 | 0.259 | 0.307 | 2.89E-09 | 0.798 | 2.30E-09 | 4,000 | 1.00E+01 | 6.78E+04 |

| Area of enclosed space below grade, $A_B$ ($cm^2$) | Crack-to-total area ratio, $\eta$ (unitless) | Crack depth below grade, $Z_{crack}$ (cm) | Enthalpy of vaporization at ave. soil temperature, $\Delta H_{v,TS}$ (cal/mol) | Henry's law constant at ave. soil temperature, $H_{TS}$ (atm-$m^3$/mol) | Henry's law constant at ave. soil temperature, $H'_{TS}$ (unitless) | Vapor viscosity at ave. soil temperature, $\mu_{TS}$ (g/cm-s) | Vadose zone effective diffusion coefficient, $D^{eff}_V$ ($cm^2/s$) | Diffusion path length, $L_d$ (cm) |
|---|---|---|---|---|---|---|---|---|
| 1.00E+06 | 5.00E-03 | 15 | 6,787 | 5.06E-01 | 2.08E+01 | 1.80E-04 | 2.17E-03 | 899 |

| Convection path length, $L_p$ (cm) | Source vapor conc., $C_{source}$ ($\mu g/m^3$) | Crack radius, $r_{crack}$ (cm) | Average vapor flow rate into bldg., $Q_{soil}$ ($cm^3/s$) | Crack effective diffusion coefficient, $D^{crack}$ ($cm^2/s$) | Area of crack, $A_{crack}$ ($cm^2$) | Exponent of equivalent foundation Peclet number, $exp(Pe^f)$ (unitless) | Infinite source indoor attenuation coefficient, $\alpha$ (unitless) | Infinite source bldg. conc., $C_{building}$ ($\mu g/m^3$) |
|---|---|---|---|---|---|---|---|---|
| 15 | 1.00E+01 | 1.25 | 8.33E+01 | 2.17E-03 | 5.00E+03 | 2.40E+33 | **3.46E-05** | 3.46E-04 |

**Warning: alpha < 6E-05 is unreasonably low.**

| Unit risk factor, URF $(\mu g/m^3)^{-1}$ | Reference conc., RfC ($mg/m^3$) |
|---|---|
| NA | 3.0E+01 |

**END**

**Scenario:** **Commercial**
**Chemical:** **1,1,2-Trichloro-1,2,2-trifluoroethane**

INCREMENTAL RISK CALCULATIONS:

| Incremental risk from vapor intrusion to indoor air, carcinogen (unitless) | Hazard quotient from vapor intrusion to indoor air, noncarcinogen (unitless) |
|---|---|
| **NA** | **2.6E-09** |

**MESSAGE SUMMARY BELOW:**

| | |
|---|---|
| **END** | MESSAGE: Attenuation factor < 6E-05 is unreasonably low. |

USEPA SG-SCREEN
Version 2.0, 04/2003

DTSC Modification
December 2014

# Department of Toxic Substances Control
# Vapor Intrusion Screening Model - Soil Gas

DATA ENTRY SHEET

**Scenario:** Residential
**Chemical:** 1,1,2-Trichloro-1,2,2-trifluoroethane

**Results Summary**

| Soil Gas Conc. ($\mu g/m^3$) | Attenuation Factor (unitless) | Indoor Air Conc. ($\mu g/m^3$) | Cancer Risk | Noncancer Hazard |
|---|---|---|---|---|
| 2.30E+01 | 1.8E-04 | 4.3E-03 | NA | 1.4E-07 |

Reset to Defaults

Soil Gas Concentration Data

| ENTER Chemical CAS No. (numbers only, no dashes) | ENTER Soil gas conc., $C_g$ ($\mu g/m^3$) | OR | ENTER Soil gas conc., $C_g$ (ppmv) | Chemical |
|---|---|---|---|---|
| 76131 | 2.30E+01 | | | 1,1,2-Trichloro-1,2,2-trifluoroethane |

MORE ↓

| ENTER Depth below grade to bottom of enclosed space floor, $L_F$ (15 or 200 cm) | ENTER Soil gas sampling depth below grade, $L_s$ (cm) | ENTER Average soil temperature, $T_S$ ($^oC$) | ENTER Vadose zone SCS soil type (used to estimate soil vapor permeability) | OR | ENTER User-defined vadose zone soil vapor permeability, $k_v$ ($cm^2$) |
|---|---|---|---|---|---|
| 15 | 335 | 24 | SIL | | |

MORE ↓

| ENTER Vandose zone SCS soil type (Lookup Soil Parameters) | ENTER Vadose zone soil dry bulk density, $\rho_b^A$ ($g/cm^3$) | ENTER Vadose zone soil total porosity, $n^V$ (unitless) | ENTER Vadose zone soil water-filled porosity, $\theta_w^V$ ($cm^3/cm^3$) | ENTER Average vapor flow rate into bldg. (Leave blank to calculate) $Q_{soil}$ (L/m) |
|---|---|---|---|---|
| SIL | 1.49 | 0.439 | 0.18 | 5 |

MORE ↓

Lookup Receptor Parameters

| | ENTER Averaging time for carcinogens, $AT_C$ (yrs) | ENTER Averaging time for noncarcinogens, $AT_{NC}$ (yrs) | ENTER Exposure duration, ED (yrs) | ENTER Exposure frequency, EF (days/yr) | ENTER Exposure Time ET (hrs/day) | ENTER Air Exchange Rate ACH $(hour)^{-1}$ |
|---|---|---|---|---|---|---|
| NEW=> Residential | 70 | 26 | 26 | 350 | 24 | 0.5 |
| | | | | | (NEW) | (NEW) |

END

## 1,1,2-Trichloro-1,2,2-trifluoroethane

| Diffusivity in air, $D_a$ ($cm^2/s$) | Diffusivity in water, $D_w$ ($cm^2/s$) | Henry's law constant at reference temperature, H (atm-$m^3$/mol) | Henry's law constant reference temperature, $T_R$ ($^oC$) | Enthalpy of vaporization at the normal boiling point, $\Delta H_{v,b}$ (cal/mol) | Normal boiling point, $T_B$ ($^oK$) | Critical temperature, $T_C$ ($^oK$) | Unit risk factor, URF ($\mu g/m^3)^{-1}$ | Reference conc., RfC ($mg/m^3$) | Molecular weight, MW (g/mol) |
|---|---|---|---|---|---|---|---|---|---|
| 3.76E-02 | 8.59E-06 | 5.26E-01 | 25 | 6,463 | 320.70 | 487.30 | 0.0E+00 | 3.0E+01 | 187.38 |

**END**

**Scenario:** **Residential**

**Chemical:** **1,1,2-Trichloro-1,2,2-trifluoroethane**

| Source-building separation, $L_T$ (cm) | Vadose zone soil air-filled porosity, $\theta_a^V$ ($cm^3/cm^3$) | Vadose zone effective total fluid saturation, $S_{te}$ ($cm^3/cm^3$) | Vadose zone soil intrinsic permeability, $k_i$ ($cm^2$) | Vadose zone soil relative air permeability, $k_{rg}$ ($cm^2$) | Vadose zone soil effective vapor permeability, $k_v$ ($cm^2$) | Floor-wall seam perimeter, $X_{crack}$ (cm) | Soil gas conc. ($\mu g/m^3$) | Bldg. ventilation rate, $Q_{building}$ ($cm^3/s$) |
|---|---|---|---|---|---|---|---|---|
| 320 | 0.259 | 0.307 | 2.89E-09 | 0.798 | 2.30E-09 | 4,000 | 2.30E+01 | 3.39E+04 |

| Area of enclosed space below grade, $A_B$ ($cm^2$) | Crack-to-total area ratio, $\eta$ (unitless) | Crack depth below grade, $Z_{crack}$ (cm) | Enthalpy of vaporization at ave. soil temperature, $\Delta H_{v,TS}$ (cal/mol) | Henry's law constant at ave. soil temperature, $H_{TS}$ (atm-$m^3$/mol) | Henry's law constant at ave. soil temperature, $H'_{TS}$ (unitless) | Vapor viscosity at ave. soil temperature, $\mu_{TS}$ (g/cm-s) | Vadose zone effective diffusion coefficient, $D^{eff}_V$ ($cm^2/s$) | Diffusion path length, $L_d$ (cm) |
|---|---|---|---|---|---|---|---|---|
| 1.00E+06 | 5.00E-03 | 15 | 6,787 | 5.06E-01 | 2.08E+01 | 1.80E-04 | 2.17E-03 | 320 |

| Convection path length, $L_p$ (cm) | Source vapor conc., $C_{source}$ ($\mu g/m^3$) | Crack radius, $r_{crack}$ (cm) | Average vapor flow rate into bldg., $Q_{soil}$ ($cm^3/s$) | Crack effective diffusion coefficient, $D^{crack}$ ($cm^2/s$) | Area of crack, $A_{crack}$ ($cm^2$) | Exponent of equivalent foundation Peclet number, $exp(Pe^f)$ (unitless) | Infinite source indoor attenuation coefficient, $\alpha$ (unitless) | Infinite source bldg. conc., $C_{building}$ ($\mu g/m^3$) |
|---|---|---|---|---|---|---|---|---|
| 15 | 2.30E+01 | 1.25 | 8.33E+01 | 2.17E-03 | 5.00E+03 | 2.40E+33 | **1.85E-04** | 4.25E-03 |

| Unit risk factor, URF $(\mu g/m^3)^{-1}$ | Reference conc., RfC ($mg/m^3$) |
|---|---|
| NA | 3.0E+01 |

**END**

**Scenario:** **Residential**
**Chemical:** **1,1,2-Trichloro-1,2,2-trifluoroethane**

INCREMENTAL RISK CALCULATIONS:

| Incremental risk from vapor intrusion to indoor air, carcinogen (unitless) | Hazard quotient from vapor intrusion to indoor air, noncarcinogen (unitless) |
|---|---|
| **NA** | **1.4E-07** |

**MESSAGE SUMMARY BELOW:**

**END**

USEPA SG-SCREEN
Version 2.0, 04/2003

DTSC Modification
December 2014

# Department of Toxic Substances Control
# Vapor Intrusion Screening Model - Soil Gas

DATA ENTRY SHEET

**Scenario:** Commercial
**Chemical:** 1,1,2-Trichloro-1,2,2-trifluoroethane

**Results Summary**

| Soil Gas Conc. ($\mu g/m^3$) | Attenuation Factor (unitless) | Indoor Air Conc. ($\mu g/m^3$) | Cancer Risk | Noncancer Hazard |
|---|---|---|---|---|
| 2.30E+01 | 9.2E-05 | 2.1E-03 | NA | 1.6E-08 |

Reset to Defaults

Soil Gas Concentration Data

| ENTER Chemical CAS No. (numbers only, no dashes) | ENTER Soil gas conc., $C_g$ ($\mu g/m^3$) | OR | ENTER Soil gas conc., $C_g$ (ppmv) | Chemical |
|---|---|---|---|---|
| 76131 | 2.30E+01 | | | 1,1,2-Trichloro-1,2,2-trifluoroethane |

MORE ↓

| ENTER Depth below grade to bottom of enclosed space floor, $L_F$ (15 or 200 cm) | ENTER Soil gas sampling depth below grade, $L_s$ (cm) | ENTER Average soil temperature, $T_S$ (°C) | ENTER Vadose zone SCS soil type (used to estimate soil vapor permeability) | OR | ENTER User-defined vadose zone soil vapor permeability, $k_v$ ($cm^2$) |
|---|---|---|---|---|---|
| 15 | 335 | 24 | SIL | | |

MORE ↓

| ENTER Vandose zone SCS soil type (Lookup Soil Parameters) | ENTER Vadose zone soil dry bulk density, $\rho_b^A$ ($g/cm^3$) | ENTER Vadose zone soil total porosity, $n^V$ (unitless) | ENTER Vadose zone soil water-filled porosity, $\theta_w^V$ ($cm^3/cm^3$) | ENTER Average vapor flow rate into bldg. (Leave blank to calculate) $Q_{soil}$ (L/m) |
|---|---|---|---|---|
| SIL | 1.49 | 0.439 | 0.18 | 5 |

MORE ↓

Lookup Receptor Parameters

| | ENTER Averaging time for carcinogens, $AT_C$ (yrs) | ENTER Averaging time for noncarcinogens, $AT_{NC}$ (yrs) | ENTER Exposure duration, ED (yrs) | ENTER Exposure frequency, EF (days/yr) | ENTER Exposure Time ET (hrs/day) | ENTER Air Exchange Rate ACH $(hour)^{-1}$ |
|---|---|---|---|---|---|---|
| NEW=> Commercial | 70 | 25 | 25 | 250 | 8 | 1 |
| | | | | | (NEW) | (NEW) |

END

## 1,1,2-Trichloro-1,2,2-trifluoroethane

| Diffusivity in air, $D_a$ ($cm^2/s$) | Diffusivity in water, $D_w$ ($cm^2/s$) | Henry's law constant at reference temperature, H (atm-$m^3$/mol) | Henry's law constant reference temperature, $T_R$ ($^oC$) | Enthalpy of vaporization at the normal boiling point, $\Delta H_{v,b}$ (cal/mol) | Normal boiling point, $T_B$ ($^oK$) | Critical temperature, $T_C$ ($^oK$) | Unit risk factor, URF ($\mu g/m^3)^{-1}$ | Reference conc., RfC ($mg/m^3$) | Molecular weight, MW (g/mol) |
|---|---|---|---|---|---|---|---|---|---|
| 3.76E-02 | 8.59E-06 | 5.26E-01 | 25 | 6,463 | 320.70 | 487.30 | 0.0E+00 | 3.0E+01 | 187.38 |

**END**

**Scenario:** **Commercial**

**Chemical:** **1,1,2-Trichloro-1,2,2-trifluoroethane**

| Source-building separation, $L_T$ (cm) | Vadose zone soil air-filled porosity, $\theta_a^V$ ($cm^3/cm^3$) | Vadose zone effective total fluid saturation, $S_{te}$ ($cm^3/cm^3$) | Vadose zone soil intrinsic permeability, $k_i$ ($cm^2$) | Vadose zone soil relative air permeability, $k_{rg}$ ($cm^2$) | Vadose zone soil effective vapor permeability, $k_v$ ($cm^2$) | Floor-wall seam perimeter, $X_{crack}$ (cm) | Soil gas conc. ($\mu g/m^3$) | Bldg. ventilation rate, $Q_{building}$ ($cm^3/s$) |
|---|---|---|---|---|---|---|---|---|
| 320 | 0.259 | 0.307 | 2.89E-09 | 0.798 | 2.30E-09 | 4,000 | 2.30E+01 | 6.78E+04 |

| Area of enclosed space below grade, $A_B$ ($cm^2$) | Crack-to-total area ratio, $\eta$ (unitless) | Crack depth below grade, $Z_{crack}$ (cm) | Enthalpy of vaporization at ave. soil temperature, $\Delta H_{v,TS}$ (cal/mol) | Henry's law constant at ave. soil temperature, $H_{TS}$ (atm-$m^3$/mol) | Henry's law constant at ave. soil temperature, $H'_{TS}$ (unitless) | Vapor viscosity at ave. soil temperature, $\mu_{TS}$ (g/cm-s) | Vadose zone effective diffusion coefficient, $D^{eff}_V$ ($cm^2/s$) | Diffusion path length, $L_d$ (cm) |
|---|---|---|---|---|---|---|---|---|
| 1.00E+06 | 5.00E-03 | 15 | 6,787 | 5.06E-01 | 2.08E+01 | 1.80E-04 | 2.17E-03 | 320 |

| Convection path length, $L_p$ (cm) | Source vapor conc., $C_{source}$ ($\mu g/m^3$) | Crack radius, $r_{crack}$ (cm) | Average vapor flow rate into bldg., $Q_{soil}$ ($cm^3/s$) | Crack effective diffusion coefficient, $D^{crack}$ ($cm^2/s$) | Area of crack, $A_{crack}$ ($cm^2$) | Exponent of equivalent foundation Peclet number, $exp(Pe^f)$ (unitless) | Infinite source indoor attenuation coefficient, $\alpha$ (unitless) | Infinite source bldg. conc., $C_{building}$ ($\mu g/m^3$) |
|---|---|---|---|---|---|---|---|---|
| 15 | 2.30E+01 | 1.25 | 8.33E+01 | 2.17E-03 | 5.00E+03 | 2.40E+33 | **9.25E-05** | 2.13E-03 |

| Unit risk factor, URF $(\mu g/m^3)^{-1}$ | Reference conc., RfC ($mg/m^3$) |
|---|---|
| NA | 3.0E+01 |

**END**

**Scenario:** **Commercial**
**Chemical:** **1,1,2-Trichloro-1,2,2-trifluoroethane**

INCREMENTAL RISK CALCULATIONS:

| Incremental risk from vapor intrusion to indoor air, carcinogen (unitless) | Hazard quotient from vapor intrusion to indoor air, noncarcinogen (unitless) |
|---|---|
| **NA** | **1.6E-08** |

**MESSAGE SUMMARY BELOW:**

**END**

USEPA SG-SCREEN
Version 2.0, 04/2003

DTSC Modification
December 2014

# Department of Toxic Substances Control
# Vapor Intrusion Screening Model - Soil Gas

DATA ENTRY SHEET

**Scenario:** **Residential**
**Chemical:** **Methylisobutylketone (4-methyl-2-pentanone)**

| Results Summary | | | | |
|---|---|---|---|---|
| Soil Gas Conc. ($\mu g/m^3$) | Attenuation Factor (unitless) | Indoor Air Conc. ($\mu g/m^3$) | Cancer Risk | Noncancer Hazard |
| 1.00E+01 | 1.3E-04 | 1.3E-03 | NA | 4.0E-07 |

Reset to Defaults

Soil Gas Concentration Data

| ENTER Chemical CAS No. (numbers only, no dashes) | ENTER Soil gas conc., $C_g$ ($\mu g/m^3$) | OR | ENTER Soil gas conc., $C_g$ (ppmv) | Chemical |
|---|---|---|---|---|
| 108101 | 1.00E+01 | | | Methylisobutylketone (4-methyl-2-pentanone) |

MESSAGE: See VLOOKUP table comments on chemical properties and/or toxicity criteria for this chemical.

MORE ↓

| ENTER Depth below grade to bottom of enclosed space floor, $L_F$ (15 or 200 cm) | ENTER Soil gas sampling depth below grade, $L_s$ (cm) | ENTER Average soil temperature, $T_S$ ($^oC$) | ENTER Vadose zone SCS soil type (used to estimate soil vapor permeability) | OR | ENTER User-defined vadose zone soil vapor permeability, $k_v$ ($cm^2$) |
|---|---|---|---|---|---|
| 15 | 914 | 24 | SIL | | |

MORE ↓

Lookup Soil Parameters

| ENTER Vandose zone SCS soil type | ENTER Vadose zone soil dry bulk density, $\rho_b^A$ ($g/cm^3$) | ENTER Vadose zone soil total porosity, $n^V$ (unitless) | ENTER Vadose zone soil water-filled porosity, $\theta_w^V$ ($cm^3/cm^3$) | ENTER Average vapor flow rate into bldg. (Leave blank to calculate) $Q_{soil}$ (L/m) |
|---|---|---|---|---|
| SIL | 1.49 | 0.439 | 0.18 | 5 |

MORE ↓

Lookup Receptor Parameters

| | ENTER Averaging time for carcinogens, $AT_C$ (yrs) | ENTER Averaging time for noncarcinogens, $AT_{NC}$ (yrs) | ENTER Exposure duration, ED (yrs) | ENTER Exposure frequency, EF (days/yr) | ENTER Exposure Time ET (hrs/day) | ENTER Air Exchange Rate ACH $(hour)^{-1}$ |
|---|---|---|---|---|---|---|
| NEW=> Residential | 70 | 26 | 26 | 350 | 24 | 0.5 |
| | | | | | (NEW) | (NEW) |

END

## Methylisobutylketone (4-methyl-2-pentanone)

| Diffusivity in air, $D_a$ ($cm^2/s$) | Diffusivity in water, $D_w$ ($cm^2/s$) | Henry's law constant at reference temperature, H ($atm\text{-}m^3/mol$) | Henry's law constant reference temperature, $T_R$ ($^oC$) | Enthalpy of vaporization at the normal boiling point, $\Delta H_{v,b}$ (cal/mol) | Normal boiling point, $T_B$ ($^oK$) | Critical temperature, $T_C$ ($^oK$) | Unit risk factor, URF $(\mu g/m^3)^{-1}$ | Reference conc., RfC ($mg/m^3$) | Molecular weight, MW (g/mol) |
|---|---|---|---|---|---|---|---|---|---|
| 6.98E-02 | 8.35E-06 | 1.38E-04 | 25 | 8,243 | 389.50 | 571.00 | 0.0E+00 | 3.0E+00 | 100.16 |

**END**

**Scenario:** **Residential**

**Chemical:** **Methylisobutylketone (4-methyl-2-pentanone)**

| Source-building separation, $L_T$ (cm) | Vadose zone soil air-filled porosity, $\theta_a^V$ ($cm^3/cm^3$) | Vadose zone effective total fluid saturation, $S_{te}$ ($cm^3/cm^3$) | Vadose zone soil intrinsic permeability, $k_i$ ($cm^2$) | Vadose zone soil relative air permeability, $k_{rg}$ ($cm^2$) | Vadose zone soil effective vapor permeability, $k_v$ ($cm^2$) | Floor-wall seam perimeter, $X_{crack}$ (cm) | Soil gas conc. ($\mu g/m^3$) | Bldg. ventilation rate, $Q_{building}$ ($cm^3/s$) |
|---|---|---|---|---|---|---|---|---|
| 899 | 0.259 | 0.307 | 2.89E-09 | 0.798 | 2.30E-09 | 4,000 | 1.00E+01 | 3.39E+04 |

| Area of enclosed space below grade, $A_B$ ($cm^2$) | Crack-to-total area ratio, $\eta$ (unitless) | Crack depth below grade, $Z_{crack}$ (cm) | Enthalpy of vaporization at ave. soil temperature, $\Delta H_{v,TS}$ (cal/mol) | Henry's law constant at ave. soil temperature, $H_{TS}$ (atm-$m^3$/mol) | Henry's law constant at ave. soil temperature, $H'_{TS}$ (unitless) | Vapor viscosity at ave. soil temperature, $\mu_{TS}$ (g/cm-s) | Vadose zone effective diffusion coefficient, $D^{eff}_V$ ($cm^2/s$) | Diffusion path length, $L_d$ (cm) |
|---|---|---|---|---|---|---|---|---|
| 1.00E+06 | 5.00E-03 | 15 | 9,673 | 1.31E-04 | 5.36E-03 | 1.80E-04 | 4.05E-03 | 899 |

| Convection path length, $L_p$ (cm) | Source vapor conc., $C_{source}$ ($\mu g/m^3$) | Crack radius, $r_{crack}$ (cm) | Average vapor flow rate into bldg., $Q_{soil}$ ($cm^3/s$) | Crack effective diffusion coefficient, $D^{crack}$ ($cm^2/s$) | Area of crack, $A_{crack}$ ($cm^2$) | Exponent of equivalent foundation Peclet number, $exp(Pe^f)$ (unitless) | Infinite source indoor attenuation coefficient, $\alpha$ (unitless) | Infinite source bldg. conc., $C_{building}$ ($\mu g/m^3$) |
|---|---|---|---|---|---|---|---|---|
| 15 | 1.00E+01 | 1.25 | 8.33E+01 | 4.05E-03 | 5.00E+03 | 7.10E+17 | **1.26E-04** | 1.26E-03 |

| Unit risk factor, URF $(\mu g/m^3)^{-1}$ | Reference conc., RfC ($mg/m^3$) |
|---|---|
| NA | 3.0E+00 |

**END**

**Scenario:** **Residential**
**Chemical:** **Methylisobutylketone (4-methyl-2-pentanone)**

INCREMENTAL RISK CALCULATIONS:

| Incremental risk from vapor intrusion to indoor air, carcinogen (unitless) | Hazard quotient from vapor intrusion to indoor air, noncarcinogen (unitless) |
|---|---|
| **NA** | **4.0E-07** |

**MESSAGE SUMMARY BELOW:**

**END**

USEPA SG-SCREEN
Version 2.0, 04/2003

DTSC Modification
December 2014

# Department of Toxic Substances Control
# Vapor Intrusion Screening Model - Soil Gas

DATA ENTRY SHEET

**Scenario:** Commercial
**Chemical:** Methylisobutylketone (4-methyl-2-pentanone)

| Results Summary | | | | |
|---|---|---|---|---|
| Soil Gas Conc. ($\mu g/m^3$) | Attenuation Factor (unitless) | Indoor Air Conc. ($\mu g/m^3$) | Cancer Risk | Noncancer Hazard |
| 1.00E+01 | 6.3E-05 | 6.3E-04 | NA | 4.8E-08 |

Reset to Defaults

Soil Gas Concentration Data

| ENTER Chemical CAS No. (numbers only, no dashes) | ENTER Soil gas conc., $C_g$ ($\mu g/m^3$) | OR | ENTER Soil gas conc., $C_g$ (ppmv) | Chemical |
|---|---|---|---|---|
| 108101 | 1.00E+01 | | | Methylisobutylketone (4-methyl-2-pentanone) |

MESSAGE: See VLOOKUP table comments on chemical properties and/or toxicity criteria for this chemical.

MORE ↓

| ENTER Depth below grade to bottom of enclosed space floor, $L_F$ (15 or 200 cm) | ENTER Soil gas sampling depth below grade, $L_s$ (cm) | ENTER Average soil temperature, $T_S$ (°C) | ENTER Vadose zone SCS soil type (used to estimate soil vapor permeability) | OR | ENTER User-defined vadose zone soil vapor permeability, $k_v$ ($cm^2$) |
|---|---|---|---|---|---|
| 15 | 914 | 24 | SIL | | |

MORE ↓

| ENTER Vandose zone SCS soil type (Lookup Soil Parameters) | ENTER Vadose zone soil dry bulk density, $\rho_b^A$ ($g/cm^3$) | ENTER Vadose zone soil total porosity, $n^V$ (unitless) | ENTER Vadose zone soil water-filled porosity, $\theta_w^V$ ($cm^3/cm^3$) | ENTER Average vapor flow rate into bldg. (Leave blank to calculate) $Q_{soil}$ (L/m) |
|---|---|---|---|---|
| SIL | 1.49 | 0.439 | 0.18 | 5 |

MORE ↓

Lookup Receptor Parameters

| | ENTER Averaging time for carcinogens, $AT_C$ (yrs) | ENTER Averaging time for noncarcinogens, $AT_{NC}$ (yrs) | ENTER Exposure duration, ED (yrs) | ENTER Exposure frequency, EF (days/yr) | ENTER Exposure Time ET (hrs/day) | ENTER Air Exchange Rate ACH $(hour)^{-1}$ |
|---|---|---|---|---|---|---|
| NEW=> Commercial | 70 | 25 | 25 | 250 | 8 | 1 |
| | | | | | (NEW) | (NEW) |

END

## Methylisobutylketone (4-methyl-2-pentanone)

| Diffusivity in air, $D_a$ ($cm^2/s$) | Diffusivity in water, $D_w$ ($cm^2/s$) | Henry's law constant at reference temperature, H ($atm\text{-}m^3/mol$) | Henry's law constant reference temperature, $T_R$ ($^oC$) | Enthalpy of vaporization at the normal boiling point, $\Delta H_{v,b}$ (cal/mol) | Normal boiling point, $T_B$ ($^oK$) | Critical temperature, $T_C$ ($^oK$) | Unit risk factor, URF $(\mu g/m^3)^{-1}$ | Reference conc., RfC ($mg/m^3$) | Molecular weight, MW (g/mol) |
|---|---|---|---|---|---|---|---|---|---|
| 6.98E-02 | 8.35E-06 | 1.38E-04 | 25 | 8,243 | 389.50 | 571.00 | 0.0E+00 | 3.0E+00 | 100.16 |

**END**

**Scenario:** **Commercial**

**Chemical:** **Methylisobutylketone (4-methyl-2-pentanone)**

| Source-building separation, $L_T$ (cm) | Vadose zone soil air-filled porosity, $\theta_a^V$ ($cm^3/cm^3$) | Vadose zone effective total fluid saturation, $S_{te}$ ($cm^3/cm^3$) | Vadose zone soil intrinsic permeability, $k_i$ ($cm^2$) | Vadose zone soil relative air permeability, $k_{rg}$ ($cm^2$) | Vadose zone soil effective vapor permeability, $k_v$ ($cm^2$) | Floor-wall seam perimeter, $X_{crack}$ (cm) | Soil gas conc. ($\mu g/m^3$) | Bldg. ventilation rate, $Q_{building}$ ($cm^3/s$) |
|---|---|---|---|---|---|---|---|---|
| 899 | 0.259 | 0.307 | 2.89E-09 | 0.798 | 2.30E-09 | 4,000 | 1.00E+01 | 6.78E+04 |

| Area of enclosed space below grade, $A_B$ ($cm^2$) | Crack-to-total area ratio, $\eta$ (unitless) | Crack depth below grade, $Z_{crack}$ (cm) | Enthalpy of vaporization at ave. soil temperature, $\Delta H_{v,TS}$ (cal/mol) | Henry's law constant at ave. soil temperature, $H_{TS}$ (atm-$m^3$/mol) | Henry's law constant at ave. soil temperature, $H'_{TS}$ (unitless) | Vapor viscosity at ave. soil temperature, $\mu_{TS}$ (g/cm-s) | Vadose zone effective diffusion coefficient, $D^{eff}_V$ ($cm^2/s$) | Diffusion path length, $L_d$ (cm) |
|---|---|---|---|---|---|---|---|---|
| 1.00E+06 | 5.00E-03 | 15 | 9,673 | 1.31E-04 | 5.36E-03 | 1.80E-04 | 4.05E-03 | 899 |

| Convection path length, $L_p$ (cm) | Source vapor conc., $C_{source}$ ($\mu g/m^3$) | Crack radius, $r_{crack}$ (cm) | Average vapor flow rate into bldg., $Q_{soil}$ ($cm^3/s$) | Crack effective diffusion coefficient, $D^{crack}$ ($cm^2/s$) | Area of crack, $A_{crack}$ ($cm^2$) | Exponent of equivalent foundation Peclet number, $exp(Pe^f)$ (unitless) | Infinite source indoor attenuation coefficient, $\alpha$ (unitless) | Infinite source bldg. conc., $C_{building}$ ($\mu g/m^3$) |
|---|---|---|---|---|---|---|---|---|
| 15 | 1.00E+01 | 1.25 | 8.33E+01 | 4.05E-03 | 5.00E+03 | 7.10E+17 | **6.31E-05** | 6.31E-04 |

| Unit risk factor, URF $(\mu g/m^3)^{-1}$ | Reference conc., RfC ($mg/m^3$) |
|---|---|
| NA | 3.0E+00 |

**END**

**Scenario:** **Commercial**
**Chemical:** **Methylisobutylketone (4-methyl-2-pentanone)**

INCREMENTAL RISK CALCULATIONS:

| Incremental risk from vapor intrusion to indoor air, carcinogen (unitless) | Hazard quotient from vapor intrusion to indoor air, noncarcinogen (unitless) |
|---|---|
| **NA** | **4.8E-08** |

**MESSAGE SUMMARY BELOW:**

**END**

USEPA SG-SCREEN
Version 2.0, 04/2003

DTSC Modification
December 2014

# Department of Toxic Substances Control
# Vapor Intrusion Screening Model - Soil Gas

DATA ENTRY SHEET

**Scenario:** Residential
**Chemical:** n-Propylbenzene

| Results Summary | | | | |
|---|---|---|---|---|
| Soil Gas Conc. ($\mu g/m^3$) | Attenuation Factor (unitless) | Indoor Air Conc. ($\mu g/m^3$) | Cancer Risk | Noncancer Hazard |
| 1.60E+01 | 1.1E-04 | 1.7E-03 | NA | 1.7E-06 |

Reset to Defaults

Soil Gas Concentration Data

| ENTER Chemical CAS No. (numbers only, no dashes) | ENTER Soil gas conc., $C_g$ ($\mu g/m^3$) | OR | ENTER Soil gas conc., $C_g$ (ppmv) | Chemical |
|---|---|---|---|---|
| 103651 | 1.60E+01 | | | n-Propylbenzene |

MORE ↓

| ENTER Depth below grade to bottom of enclosed space floor, $L_F$ (15 or 200 cm) | ENTER Soil gas sampling depth below grade, $L_s$ (cm) | ENTER Average soil temperature, $T_S$ ($^oC$) | ENTER Vadose zone SCS soil type (used to estimate soil vapor permeability) | OR | ENTER User-defined vadose zone soil vapor permeability, $k_v$ ($cm^2$) |
|---|---|---|---|---|---|
| 15 | 914 | 24 | SIL | | |

MORE ↓

| ENTER Vandose zone SCS soil type (Lookup Soil Parameters) | ENTER Vadose zone soil dry bulk density, $\rho_b^A$ ($g/cm^3$) | ENTER Vadose zone soil total porosity, $n^V$ (unitless) | ENTER Vadose zone soil water-filled porosity, $\theta_w^V$ ($cm^3/cm^3$) | ENTER Average vapor flow rate into bldg. (Leave blank to calculate) $Q_{soil}$ (L/m) |
|---|---|---|---|---|
| SIL | 1.49 | 0.439 | 0.18 | 5 |

MORE ↓

Lookup Receptor Parameters

| | ENTER Averaging time for carcinogens, $AT_C$ (yrs) | ENTER Averaging time for noncarcinogens, $AT_{NC}$ (yrs) | ENTER Exposure duration, ED (yrs) | ENTER Exposure frequency, EF (days/yr) | ENTER Exposure Time ET (hrs/day) | ENTER Air Exchange Rate ACH $(hour)^{-1}$ |
|---|---|---|---|---|---|---|
| NEW=> Residential | 70 | 26 | 26 | 350 | 24 | 0.5 |
| | | | | | (NEW) | (NEW) |

END

## n-Propylbenzene

| Diffusivity in air, $D_a$ ($cm^2/s$) | Diffusivity in water, $D_w$ ($cm^2/s$) | Henry's law constant at reference temperature, H (atm-$m^3$/mol) | Henry's law constant reference temperature, $T_R$ ($^oC$) | Enthalpy of vaporization at the normal boiling point, $\Delta H_{v,b}$ (cal/mol) | Normal boiling point, $T_B$ ($^oK$) | Critical temperature, $T_C$ ($^oK$) | Unit risk factor, URF ($\mu g/m^3)^{-1}$ | Reference conc., RfC ($mg/m^3$) | Molecular weight, MW (g/mol) |
|---|---|---|---|---|---|---|---|---|---|
| 6.02E-02 | 7.83E-06 | 1.05E-02 | 25 | 9,123 | 432.20 | 630.00 | 0.0E+00 | 1.0E+00 | 120.19 |

**END**

INTERMEDIATE CALCULATIONS SHEET

**Scenario:** **Residential**

**Chemical:** **n-Propylbenzene**

| Source-building separation, $L_T$ (cm) | Vadose zone soil air-filled porosity, $\theta_a^V$ ($cm^3/cm^3$) | Vadose zone effective total fluid saturation, $S_{te}$ ($cm^3/cm^3$) | Vadose zone soil intrinsic permeability, $k_i$ ($cm^2$) | Vadose zone soil relative air permeability, $k_{rg}$ ($cm^2$) | Vadose zone soil effective vapor permeability, $k_v$ ($cm^2$) | Floor-wall seam perimeter, $X_{crack}$ (cm) | Soil gas conc. ($\mu g/m^3$) | Bldg. ventilation rate, $Q_{building}$ ($cm^3/s$) |
|---|---|---|---|---|---|---|---|---|
| 899 | 0.259 | 0.307 | 2.89E-09 | 0.798 | 2.30E-09 | 4,000 | 1.60E+01 | 3.39E+04 |

| Area of enclosed space below grade, $A_B$ ($cm^2$) | Crack-to-total area ratio, $\eta$ (unitless) | Crack depth below grade, $Z_{crack}$ (cm) | Enthalpy of vaporization at ave. soil temperature, $\Delta H_{v,TS}$ (cal/mol) | Henry's law constant at ave. soil temperature, $H_{TS}$ (atm-$m^3$/mol) | Henry's law constant at ave. soil temperature, $H'_{TS}$ (unitless) | Vapor viscosity at ave. soil temperature, $\mu_{TS}$ (g/cm-s) | Vadose zone effective diffusion coefficient, $D^{eff}_V$ ($cm^2/s$) | Diffusion path length, $L_d$ (cm) |
|---|---|---|---|---|---|---|---|---|
| 1.00E+06 | 5.00E-03 | 15 | 11,186 | 9.85E-03 | 4.04E-01 | 1.80E-04 | 3.47E-03 | 899 |

| Convection path length, $L_p$ (cm) | Source vapor conc., $C_{source}$ ($\mu g/m^3$) | Crack radius, $r_{crack}$ (cm) | Average vapor flow rate into bldg., $Q_{soil}$ ($cm^3/s$) | Crack effective diffusion coefficient, $D^{crack}$ ($cm^2/s$) | Area of crack, $A_{crack}$ ($cm^2$) | Exponent of equivalent foundation Peclet number, $exp(Pe^f)$ (unitless) | Infinite source indoor attenuation coefficient, $\alpha$ (unitless) | Infinite source bldg. conc., $C_{building}$ ($\mu g/m^3$) |
|---|---|---|---|---|---|---|---|---|
| 15 | 1.60E+01 | 1.25 | 8.33E+01 | 3.47E-03 | 5.00E+03 | 6.96E+20 | **1.09E-04** | 1.74E-03 |

| Unit risk factor, URF $(\mu g/m^3)^{-1}$ | Reference conc., RfC ($mg/m^3$) |
|---|---|
| NA | 1.0E+00 |

**END**

**Scenario:** **Residential**
**Chemical:** **n-Propylbenzene**

INCREMENTAL RISK CALCULATIONS:

| Incremental risk from vapor intrusion to indoor air, carcinogen (unitless) | Hazard quotient from vapor intrusion to indoor air, noncarcinogen (unitless) |
|---|---|
| **NA** | **1.7E-06** |

**MESSAGE SUMMARY BELOW:**

**END**

USEPA SG-SCREEN
Version 2.0, 04/2003

DTSC Modification
December 2014

# Department of Toxic Substances Control
# Vapor Intrusion Screening Model - Soil Gas

DATA ENTRY SHEET

**Scenario:** Commercial
**Chemical:** n-Propylbenzene

| Results Summary | | | | |
|---|---|---|---|---|
| Soil Gas Conc. ($\mu g/m^3$) | Attenuation Factor (unitless) | Indoor Air Conc. ($\mu g/m^3$) | Cancer Risk | Noncancer Hazard |
| 1.60E+01 | 5.4E-05 | 8.7E-04 | NA | 2.0E-07 |

MESSAGE: Attenuation factor < 6E-05 is unreasonably low.

Reset to Defaults

Soil Gas Concentration Data

| ENTER Chemical CAS No. (numbers only, no dashes) | ENTER Soil gas conc., $C_g$ ($\mu g/m^3$) | OR | ENTER Soil gas conc., $C_g$ (ppmv) | Chemical |
|---|---|---|---|---|
| 103651 | 1.60E+01 | | | n-Propylbenzene |

MORE ↓

| ENTER Depth below grade to bottom of enclosed space floor, $L_F$ (15 or 200 cm) | ENTER Soil gas sampling depth below grade, $L_s$ (cm) | ENTER Average soil temperature, $T_S$ (°C) | ENTER Vadose zone SCS soil type (used to estimate soil vapor permeability) | OR | ENTER User-defined vadose zone soil vapor permeability, $k_v$ ($cm^2$) |
|---|---|---|---|---|---|
| 15 | 914 | 24 | SIL | | |

MORE ↓

| ENTER Vandose zone SCS soil type (Lookup Soil Parameters) | ENTER Vadose zone soil dry bulk density, $\rho_b^A$ ($g/cm^3$) | ENTER Vadose zone soil total porosity, $n^V$ (unitless) | ENTER Vadose zone soil water-filled porosity, $\theta_w^V$ ($cm^3/cm^3$) | ENTER Average vapor flow rate into bldg. (Leave blank to calculate) $Q_{soil}$ (L/m) |
|---|---|---|---|---|
| SIL | 1.49 | 0.439 | 0.18 | 5 |

MORE ↓

Lookup Receptor Parameters

| | ENTER Averaging time for carcinogens, $AT_C$ (yrs) | ENTER Averaging time for noncarcinogens, $AT_{NC}$ (yrs) | ENTER Exposure duration, ED (yrs) | ENTER Exposure frequency, EF (days/yr) | ENTER Exposure Time ET (hrs/day) | ENTER Air Exchange Rate ACH $(hour)^{-1}$ |
|---|---|---|---|---|---|---|
| NEW=> Commercial | 70 | 25 | 25 | 250 | 8 | 1 |
| | | | | | (NEW) | (NEW) |

END

## n-Propylbenzene

| Diffusivity in air, $D_a$ ($cm^2/s$) | Diffusivity in water, $D_w$ ($cm^2/s$) | Henry's law constant at reference temperature, H (atm-$m^3$/mol) | Henry's law constant reference temperature, $T_R$ ($^oC$) | Enthalpy of vaporization at the normal boiling point, $\Delta H_{v,b}$ (cal/mol) | Normal boiling point, $T_B$ ($^oK$) | Critical temperature, $T_C$ ($^oK$) | Unit risk factor, URF ($\mu g/m^3)^{-1}$ | Reference conc., RfC ($mg/m^3$) | Molecular weight, MW (g/mol) |
|---|---|---|---|---|---|---|---|---|---|
| 6.02E-02 | 7.83E-06 | 1.05E-02 | 25 | 9,123 | 432.20 | 630.00 | 0.0E+00 | 1.0E+00 | 120.19 |

**END**

INTERMEDIATE CALCULATIONS SHEET

**Scenario:** **Commercial**

**Chemical:** **n-Propylbenzene**

| Source-building separation, $L_T$ (cm) | Vadose zone soil air-filled porosity, $\theta_a^V$ ($cm^3/cm^3$) | Vadose zone effective total fluid saturation, $S_{te}$ ($cm^3/cm^3$) | Vadose zone soil intrinsic permeability, $k_i$ ($cm^2$) | Vadose zone soil relative air permeability, $k_{rg}$ ($cm^2$) | Vadose zone soil effective vapor permeability, $k_v$ ($cm^2$) | Floor-wall seam perimeter, $X_{crack}$ (cm) | Soil gas conc. ($\mu g/m^3$) | Bldg. ventilation rate, $Q_{building}$ ($cm^3/s$) |
|---|---|---|---|---|---|---|---|---|
| 899 | 0.259 | 0.307 | 2.89E-09 | 0.798 | 2.30E-09 | 4,000 | 1.60E+01 | 6.78E+04 |

| Area of enclosed space below grade, $A_B$ ($cm^2$) | Crack-to-total area ratio, $\eta$ (unitless) | Crack depth below grade, $Z_{crack}$ (cm) | Enthalpy of vaporization at ave. soil temperature, $\Delta H_{v,TS}$ (cal/mol) | Henry's law constant at ave. soil temperature, $H_{TS}$ (atm-$m^3$/mol) | Henry's law constant at ave. soil temperature, $H'_{TS}$ (unitless) | Vapor viscosity at ave. soil temperature, $\mu_{TS}$ (g/cm-s) | Vadose zone effective diffusion coefficient, $D^{eff}_V$ ($cm^2/s$) | Diffusion path length, $L_d$ (cm) |
|---|---|---|---|---|---|---|---|---|
| 1.00E+06 | 5.00E-03 | 15 | 11,186 | 9.85E-03 | 4.04E-01 | 1.80E-04 | 3.47E-03 | 899 |

| Convection path length, $L_p$ (cm) | Source vapor conc., $C_{source}$ ($\mu g/m^3$) | Crack radius, $r_{crack}$ (cm) | Average vapor flow rate into bldg., $Q_{soil}$ ($cm^3/s$) | Crack effective diffusion coefficient, $D^{crack}$ ($cm^2/s$) | Area of crack, $A_{crack}$ ($cm^2$) | Exponent of equivalent foundation Peclet number, $exp(Pe^f)$ (unitless) | Infinite source indoor attenuation coefficient, $\alpha$ (unitless) | Infinite source bldg. conc., $C_{building}$ ($\mu g/m^3$) |
|---|---|---|---|---|---|---|---|---|
| 15 | 1.60E+01 | 1.25 | 8.33E+01 | 3.47E-03 | 5.00E+03 | 6.96E+20 | **5.45E-05** | 8.72E-04 |

**Warning: alpha < 6E-05 is unreasonably low.**

| Unit risk factor, URF $(\mu g/m^3)^{-1}$ | Reference conc., RfC ($mg/m^3$) |
|---|---|
| NA | 1.0E+00 |

**END**

**Scenario:** **Commercial**
**Chemical:** **n-Propylbenzene**

INCREMENTAL RISK CALCULATIONS:

| Incremental risk from vapor intrusion to indoor air, carcinogen (unitless) | Hazard quotient from vapor intrusion to indoor air, noncarcinogen (unitless) |
|---|---|
| **NA** | **2.0E-07** |

**MESSAGE SUMMARY BELOW:**

**END** MESSAGE: Attenuation factor < 6E-05 is unreasonably low.

USEPA SG-SCREEN
Version 2.0, 04/2003

DTSC Modification
December 2014

# Department of Toxic Substances Control
# Vapor Intrusion Screening Model - Soil Gas

DATA ENTRY SHEET

**Scenario:** Residential
**Chemical:** Styrene

| Results Summary | | | | |
|---|---|---|---|---|
| Soil Gas Conc. ($\mu g/m^3$) | Attenuation Factor (unitless) | Indoor Air Conc. ($\mu g/m^3$) | Cancer Risk | Noncancer Hazard |
| 3.10E+01 | 6.5E-04 | 2.0E-02 | NA | 2.1E-05 |

Reset to Defaults

Soil Gas Concentration Data

| ENTER Chemical CAS No. (numbers only, no dashes) | ENTER Soil gas conc., $C_g$ ($\mu g/m^3$) | OR | ENTER Soil gas conc., $C_g$ (ppmv) | Chemical |
|---|---|---|---|---|
| 100425 | 3.10E+01 | | | Styrene |

MORE ↓

| ENTER Depth below grade to bottom of enclosed space floor, $L_F$ (15 or 200 cm) | ENTER Soil gas sampling depth below grade, $L_s$ (cm) | ENTER Average soil temperature, $T_S$ ($^oC$) | ENTER Vadose zone SCS soil type (used to estimate soil vapor permeability) | OR | ENTER User-defined vadose zone soil vapor permeability, $k_v$ ($cm^2$) |
|---|---|---|---|---|---|
| 15 | 152 | 24 | SIL | | |

MORE ↓

| ENTER Vandose zone SCS soil type (Lookup Soil Parameters) | ENTER Vadose zone soil dry bulk density, $\rho_b^A$ ($g/cm^3$) | ENTER Vadose zone soil total porosity, $n^V$ (unitless) | ENTER Vadose zone soil water-filled porosity, $\theta_w^V$ ($cm^3/cm^3$) | ENTER Average vapor flow rate into bldg. (Leave blank to calculate) $Q_{soil}$ (L/m) |
|---|---|---|---|---|
| SIL | 1.49 | 0.439 | 0.18 | 5 |

MORE ↓

Lookup Receptor Parameters

| | ENTER Averaging time for carcinogens, $AT_C$ (yrs) | ENTER Averaging time for noncarcinogens, $AT_{NC}$ (yrs) | ENTER Exposure duration, ED (yrs) | ENTER Exposure frequency, EF (days/yr) | ENTER Exposure Time ET (hrs/day) | ENTER Air Exchange Rate ACH $(hour)^{-1}$ |
|---|---|---|---|---|---|---|
| NEW=> Residential | 70 | 26 | 26 | 350 | 24 | 0.5 |
| | | | | | (NEW) | (NEW) |

END

**Styrene**

| Diffusivity in air, $D_a$ ($cm^2/s$) | Diffusivity in water, $D_w$ ($cm^2/s$) | Henry's law constant at reference temperature, H (atm-$m^3$/mol) | Henry's law constant reference temperature, $T_R$ ($^oC$) | Enthalpy of vaporization at the normal boiling point, $\Delta H_{v,b}$ (cal/mol) | Normal boiling point, $T_B$ ($^oK$) | Critical temperature, $T_C$ ($^oK$) | Unit risk factor, URF ($\mu g/m^3)^{-1}$ | Reference conc., RfC ($mg/m^3$) | Molecular weight, MW (g/mol) |
|---|---|---|---|---|---|---|---|---|---|
| 7.11E-02 | 8.78E-06 | 2.75E-03 | 25 | 8,737 | 418.31 | 636.00 | 0.0E+00 | 9.0E-01 | 104.15 |

**END**

INTERMEDIATE CALCULATIONS SHEET

**Scenario:** **Residential**

**Chemical:** **Styrene**

| Source-building separation, $L_T$ (cm) | Vadose zone soil air-filled porosity, $\theta_a^V$ ($cm^3/cm^3$) | Vadose zone effective total fluid saturation, $S_{te}$ ($cm^3/cm^3$) | Vadose zone soil intrinsic permeability, $k_i$ ($cm^2$) | Vadose zone soil relative air permeability, $k_{rg}$ ($cm^2$) | Vadose zone soil effective vapor permeability, $k_v$ ($cm^2$) | Floor-wall seam perimeter, $X_{crack}$ (cm) | Soil gas conc. ($\mu g/m^3$) | Bldg. ventilation rate, $Q_{building}$ ($cm^3/s$) |
|---|---|---|---|---|---|---|---|---|
| 137 | 0.259 | 0.307 | 2.89E-09 | 0.798 | 2.30E-09 | 4,000 | 3.10E+01 | 3.39E+04 |

| Area of enclosed space below grade, $A_B$ ($cm^2$) | Crack-to-total area ratio, $\eta$ (unitless) | Crack depth below grade, $Z_{crack}$ (cm) | Enthalpy of vaporization at ave. soil temperature, $\Delta H_{v,TS}$ (cal/mol) | Henry's law constant at ave. soil temperature, $H_{TS}$ (atm-$m^3$/mol) | Henry's law constant at ave. soil temperature, $H'_{TS}$ (unitless) | Vapor viscosity at ave. soil temperature, $\mu_{TS}$ (g/cm-s) | Vadose zone effective diffusion coefficient, $D^{eff}_V$ ($cm^2/s$) | Diffusion path length, $L_d$ (cm) |
|---|---|---|---|---|---|---|---|---|
| 1.00E+06 | 5.00E-03 | 15 | 10,294 | 2.59E-03 | 1.06E-01 | 1.80E-04 | 4.11E-03 | 137 |

| Convection path length, $L_p$ (cm) | Source vapor conc., $C_{source}$ ($\mu g/m^3$) | Crack radius, $r_{crack}$ (cm) | Average vapor flow rate into bldg., $Q_{soil}$ ($cm^3/s$) | Crack effective diffusion coefficient, $D^{crack}$ ($cm^2/s$) | Area of crack, $A_{crack}$ ($cm^2$) | Exponent of equivalent foundation Peclet number, $exp(Pe^f)$ (unitless) | Infinite source indoor attenuation coefficient, $\alpha$ (unitless) | Infinite source bldg. conc., $C_{building}$ ($\mu g/m^3$) |
|---|---|---|---|---|---|---|---|---|
| 15 | 3.10E+01 | 1.25 | 8.33E+01 | 4.11E-03 | 5.00E+03 | 4.23E+17 | **6.51E-04** | 2.02E-02 |

| Unit risk factor, URF $(\mu g/m^3)^{-1}$ | Reference conc., RfC ($mg/m^3$) |
|---|---|
| NA | 9.0E-01 |

**END**

**Scenario:** **Residential**
**Chemical:** **Styrene**

INCREMENTAL RISK CALCULATIONS:

| Incremental risk from vapor intrusion to indoor air, carcinogen (unitless) | Hazard quotient from vapor intrusion to indoor air, noncarcinogen (unitless) |
|---|---|
| **NA** | **2.1E-05** |

**MESSAGE SUMMARY BELOW:**

**END**

USEPA SG-SCREEN
Version 2.0, 04/2003

DTSC Modification
December 2014

# Department of Toxic Substances Control
# Vapor Intrusion Screening Model - Soil Gas

DATA ENTRY SHEET

**Scenario:** Commercial
**Chemical:** Styrene

| Results Summary | | | | |
|---|---|---|---|---|
| Soil Gas Conc. ($\mu g/m^3$) | Attenuation Factor (unitless) | Indoor Air Conc. ($\mu g/m^3$) | Cancer Risk | Noncancer Hazard |
| 3.10E+01 | 3.3E-04 | 1.0E-02 | NA | 2.6E-06 |

Reset to Defaults

Soil Gas Concentration Data

| ENTER Chemical CAS No. (numbers only, no dashes) | ENTER Soil gas conc., $C_g$ ($\mu g/m^3$) | OR | ENTER Soil gas conc., $C_g$ (ppmv) | Chemical |
|---|---|---|---|---|
| 100425 | 3.10E+01 | | | Styrene |

MORE ↓

| ENTER Depth below grade to bottom of enclosed space floor, $L_F$ (15 or 200 cm) | ENTER Soil gas sampling depth below grade, $L_s$ (cm) | ENTER Average soil temperature, $T_S$ ($^oC$) | ENTER Vadose zone SCS soil type (used to estimate soil vapor permeability) | OR | ENTER User-defined vadose zone soil vapor permeability, $k_v$ ($cm^2$) |
|---|---|---|---|---|---|
| 15 | 152 | 24 | SIL | | |

MORE ↓

| ENTER Vandose zone SCS soil type (Lookup Soil Parameters) | ENTER Vadose zone soil dry bulk density, $\rho_b^A$ ($g/cm^3$) | ENTER Vadose zone soil total porosity, $n^V$ (unitless) | ENTER Vadose zone soil water-filled porosity, $\theta_w^V$ ($cm^3/cm^3$) | ENTER Average vapor flow rate into bldg. (Leave blank to calculate) $Q_{soil}$ (L/m) |
|---|---|---|---|---|
| SIL | 1.49 | 0.439 | 0.18 | 5 |

MORE ↓

Lookup Receptor Parameters

| | ENTER Averaging time for carcinogens, $AT_C$ (yrs) | ENTER Averaging time for noncarcinogens, $AT_{NC}$ (yrs) | ENTER Exposure duration, ED (yrs) | ENTER Exposure frequency, EF (days/yr) | ENTER Exposure Time ET (hrs/day) | ENTER Air Exchange Rate ACH $(hour)^{-1}$ |
|---|---|---|---|---|---|---|
| NEW=> Commercial | 70 | 25 | 25 | 250 | 8 | 1 |
| | | | | | (NEW) | (NEW) |

END

**Styrene**

| Diffusivity in air, $D_a$ ($cm^2/s$) | Diffusivity in water, $D_w$ ($cm^2/s$) | Henry's law constant at reference temperature, H (atm-$m^3$/mol) | Henry's law constant reference temperature, $T_R$ ($^oC$) | Enthalpy of vaporization at the normal boiling point, $\Delta H_{v,b}$ (cal/mol) | Normal boiling point, $T_B$ ($^oK$) | Critical temperature, $T_C$ ($^oK$) | Unit risk factor, URF ($\mu g/m^3)^{-1}$ | Reference conc., RfC ($mg/m^3$) | Molecular weight, MW (g/mol) |
|---|---|---|---|---|---|---|---|---|---|
| 7.11E-02 | 8.78E-06 | 2.75E-03 | 25 | 8,737 | 418.31 | 636.00 | 0.0E+00 | 9.0E-01 | 104.15 |

**END**

INTERMEDIATE CALCULATIONS SHEET

**Scenario:** **Commercial**

**Chemical:** **Styrene**

| Source-building separation, $L_T$ (cm) | Vadose zone soil air-filled porosity, $\theta_a^V$ ($cm^3/cm^3$) | Vadose zone effective total fluid saturation, $S_{te}$ ($cm^3/cm^3$) | Vadose zone soil intrinsic permeability, $k_i$ ($cm^2$) | Vadose zone soil relative air permeability, $k_{rg}$ ($cm^2$) | Vadose zone soil effective vapor permeability, $k_v$ ($cm^2$) | Floor-wall seam perimeter, $X_{crack}$ (cm) | Soil gas conc. ($\mu g/m^3$) | Bldg. ventilation rate, $Q_{building}$ ($cm^3/s$) |
|---|---|---|---|---|---|---|---|---|
| 137 | 0.259 | 0.307 | 2.89E-09 | 0.798 | 2.30E-09 | 4,000 | 3.10E+01 | 6.78E+04 |

| Area of enclosed space below grade, $A_B$ ($cm^2$) | Crack-to-total area ratio, $\eta$ (unitless) | Crack depth below grade, $Z_{crack}$ (cm) | Enthalpy of vaporization at ave. soil temperature, $\Delta H_{v,TS}$ (cal/mol) | Henry's law constant at ave. soil temperature, $H_{TS}$ (atm-$m^3$/mol) | Henry's law constant at ave. soil temperature, $H'_{TS}$ (unitless) | Vapor viscosity at ave. soil temperature, $\mu_{TS}$ (g/cm-s) | Vadose zone effective diffusion coefficient, $D^{eff}_V$ ($cm^2/s$) | Diffusion path length, $L_d$ (cm) |
|---|---|---|---|---|---|---|---|---|
| 1.00E+06 | 5.00E-03 | 15 | 10,294 | 2.59E-03 | 1.06E-01 | 1.80E-04 | 4.11E-03 | 137 |

| Convection path length, $L_p$ (cm) | Source vapor conc., $C_{source}$ ($\mu g/m^3$) | Crack radius, $r_{crack}$ (cm) | Average vapor flow rate into bldg., $Q_{soil}$ ($cm^3/s$) | Crack effective diffusion coefficient, $D^{crack}$ ($cm^2/s$) | Area of crack, $A_{crack}$ ($cm^2$) | Exponent of equivalent foundation Peclet number, $exp(Pe^f)$ (unitless) | Infinite source indoor attenuation coefficient, $\alpha$ (unitless) | Infinite source bldg. conc., $C_{building}$ ($\mu g/m^3$) |
|---|---|---|---|---|---|---|---|---|
| 15 | 3.10E+01 | 1.25 | 8.33E+01 | 4.11E-03 | 5.00E+03 | 4.23E+17 | **3.25E-04** | 1.01E-02 |

| Unit risk factor, URF $(\mu g/m^3)^{-1}$ | Reference conc., RfC ($mg/m^3$) |
|---|---|
| NA | 9.0E-01 |

**END**

**Scenario:** **Commercial**
**Chemical:** **Styrene**

INCREMENTAL RISK CALCULATIONS:

| Incremental risk from vapor intrusion to indoor air, carcinogen (unitless) | Hazard quotient from vapor intrusion to indoor air, noncarcinogen (unitless) |
|---|---|
| **NA** | **2.6E-06** |

**MESSAGE SUMMARY BELOW:**

**END**

USEPA SG-SCREEN
Version 2.0, 04/2003

DTSC Modification
December 2014

# Department of Toxic Substances Control
# Vapor Intrusion Screening Model - Soil Gas

DATA ENTRY SHEET

**Scenario:** Residential
**Chemical:** Styrene

| Results Summary | | | | |
|---|---|---|---|---|
| Soil Gas Conc. ($\mu g/m^3$) | Attenuation Factor (unitless) | Indoor Air Conc. ($\mu g/m^3$) | Cancer Risk | Noncancer Hazard |
| 8.30E+01 | 3.3E-04 | 2.7E-02 | NA | 2.9E-05 |

Reset to Defaults

Soil Gas Concentration Data

| ENTER Chemical CAS No. (numbers only, no dashes) | ENTER Soil gas conc., $C_g$ ($\mu g/m^3$) | OR | ENTER Soil gas conc., $C_g$ (ppmv) | Chemical |
|---|---|---|---|---|
| 100425 | 8.30E+01 | | | Styrene |

MORE ↓

| ENTER Depth below grade to bottom of enclosed space floor, $L_F$ (15 or 200 cm) | ENTER Soil gas sampling depth below grade, $L_s$ (cm) | ENTER Average soil temperature, $T_S$ ($^oC$) | ENTER Vadose zone SCS soil type (used to estimate soil vapor permeability) | OR | ENTER User-defined vadose zone soil vapor permeability, $k_v$ ($cm^2$) |
|---|---|---|---|---|---|
| 15 | 335 | 24 | SIL | | |

MORE ↓

| ENTER Vandose zone SCS soil type (Lookup Soil Parameters) | ENTER Vadose zone soil dry bulk density, $\rho_b^A$ ($g/cm^3$) | ENTER Vadose zone soil total porosity, $n^V$ (unitless) | ENTER Vadose zone soil water-filled porosity, $\theta_w^V$ ($cm^3/cm^3$) | ENTER Average vapor flow rate into bldg. (Leave blank to calculate) $Q_{soil}$ (L/m) |
|---|---|---|---|---|
| SIL | 1.49 | 0.439 | 0.18 | 5 |

MORE ↓

Lookup Receptor Parameters

| | ENTER Averaging time for carcinogens, $AT_C$ (yrs) | ENTER Averaging time for noncarcinogens, $AT_{NC}$ (yrs) | ENTER Exposure duration, ED (yrs) | ENTER Exposure frequency, EF (days/yr) | ENTER Exposure Time ET (hrs/day) | ENTER Air Exchange Rate ACH $(hour)^{-1}$ |
|---|---|---|---|---|---|---|
| NEW=> Residential | 70 | 26 | 26 | 350 | 24 | 0.5 |
| | | | | | (NEW) | (NEW) |

END

**Styrene**

| Diffusivity in air, $D_a$ ($cm^2/s$) | Diffusivity in water, $D_w$ ($cm^2/s$) | Henry's law constant at reference temperature, H (atm-$m^3$/mol) | Henry's law constant reference temperature, $T_R$ ($^oC$) | Enthalpy of vaporization at the normal boiling point, $\Delta H_{v,b}$ (cal/mol) | Normal boiling point, $T_B$ ($^oK$) | Critical temperature, $T_C$ ($^oK$) | Unit risk factor, URF ($\mu g/m^3)^{-1}$ | Reference conc., RfC ($mg/m^3$) | Molecular weight, MW (g/mol) |
|---|---|---|---|---|---|---|---|---|---|
| 7.11E-02 | 8.78E-06 | 2.75E-03 | 25 | 8,737 | 418.31 | 636.00 | 0.0E+00 | 9.0E-01 | 104.15 |

**END**

INTERMEDIATE CALCULATIONS SHEET

**Scenario:** **Residential**

**Chemical:** **Styrene**

| Source-building separation, $L_T$ (cm) | Vadose zone soil air-filled porosity, $\theta_a^V$ ($cm^3/cm^3$) | Vadose zone effective total fluid saturation, $S_{te}$ ($cm^3/cm^3$) | Vadose zone soil intrinsic permeability, $k_i$ ($cm^2$) | Vadose zone soil relative air permeability, $k_{rg}$ ($cm^2$) | Vadose zone soil effective vapor permeability, $k_v$ ($cm^2$) | Floor-wall seam perimeter, $X_{crack}$ (cm) | Soil gas conc. ($\mu g/m^3$) | Bldg. ventilation rate, $Q_{building}$ ($cm^3/s$) |
|---|---|---|---|---|---|---|---|---|
| 320 | 0.259 | 0.307 | 2.89E-09 | 0.798 | 2.30E-09 | 4,000 | 8.30E+01 | 3.39E+04 |

| Area of enclosed space below grade, $A_B$ ($cm^2$) | Crack-to-total area ratio, $\eta$ (unitless) | Crack depth below grade, $Z_{crack}$ (cm) | Enthalpy of vaporization at ave. soil temperature, $\Delta H_{v,TS}$ (cal/mol) | Henry's law constant at ave. soil temperature, $H_{TS}$ (atm-$m^3$/mol) | Henry's law constant at ave. soil temperature, $H'_{TS}$ (unitless) | Vapor viscosity at ave. soil temperature, $\mu_{TS}$ (g/cm-s) | Vadose zone effective diffusion coefficient, $D^{eff}_V$ ($cm^2/s$) | Diffusion path length, $L_d$ (cm) |
|---|---|---|---|---|---|---|---|---|
| 1.00E+06 | 5.00E-03 | 15 | 10,294 | 2.59E-03 | 1.06E-01 | 1.80E-04 | 4.11E-03 | 320 |

| Convection path length, $L_p$ (cm) | Source vapor conc., $C_{source}$ ($\mu g/m^3$) | Crack radius, $r_{crack}$ (cm) | Average vapor flow rate into bldg., $Q_{soil}$ ($cm^3/s$) | Crack effective diffusion coefficient, $D^{crack}$ ($cm^2/s$) | Area of crack, $A_{crack}$ ($cm^2$) | Exponent of equivalent foundation Peclet number, $exp(Pe^f)$ (unitless) | Infinite source indoor attenuation coefficient, $\alpha$ (unitless) | Infinite source bldg. conc., $C_{building}$ ($\mu g/m^3$) |
|---|---|---|---|---|---|---|---|---|
| 15 | 8.30E+01 | 1.25 | 8.33E+01 | 4.11E-03 | 5.00E+03 | 4.23E+17 | **3.28E-04** | 2.72E-02 |

| Unit risk factor, URF $(\mu g/m^3)^{-1}$ | Reference conc., RfC ($mg/m^3$) |
|---|---|
| NA | 9.0E-01 |

**END**

**Scenario:** **Residential**
**Chemical:** **Styrene**

INCREMENTAL RISK CALCULATIONS:

| Incremental risk from vapor intrusion to indoor air, carcinogen (unitless) | Hazard quotient from vapor intrusion to indoor air, noncarcinogen (unitless) |
|---|---|
| **NA** | **2.9E-05** |

**MESSAGE SUMMARY BELOW:**

**END**

USEPA SG-SCREEN
Version 2.0, 04/2003

DTSC Modification
December 2014

# Department of Toxic Substances Control
# Vapor Intrusion Screening Model - Soil Gas

DATA ENTRY SHEET

**Scenario:** Commercial
**Chemical:** Styrene

| Results Summary | | | | |
|---|---|---|---|---|
| Soil Gas Conc. ($\mu g/m^3$) | Attenuation Factor (unitless) | Indoor Air Conc. ($\mu g/m^3$) | Cancer Risk | Noncancer Hazard |
| 8.30E+01 | 1.6E-04 | 1.4E-02 | NA | 3.5E-06 |

Reset to Defaults

Soil Gas Concentration Data

| ENTER Chemical CAS No. (numbers only, no dashes) | ENTER Soil gas conc., $C_g$ ($\mu g/m^3$) | OR | ENTER Soil gas conc., $C_g$ (ppmv) | Chemical |
|---|---|---|---|---|
| 100425 | 8.30E+01 | | | Styrene |

MORE ↓

| ENTER Depth below grade to bottom of enclosed space floor, $L_F$ (15 or 200 cm) | ENTER Soil gas sampling depth below grade, $L_s$ (cm) | ENTER Average soil temperature, $T_S$ ($^oC$) | ENTER Vadose zone SCS soil type (used to estimate soil vapor permeability) | OR | ENTER User-defined vadose zone soil vapor permeability, $k_v$ ($cm^2$) |
|---|---|---|---|---|---|
| 15 | 335 | 24 | SIL | | |

MORE ↓

| ENTER Vandose zone SCS soil type (Lookup Soil Parameters) | ENTER Vadose zone soil dry bulk density, $\rho_b^A$ ($g/cm^3$) | ENTER Vadose zone soil total porosity, $n^V$ (unitless) | ENTER Vadose zone soil water-filled porosity, $\theta_w^V$ ($cm^3/cm^3$) | ENTER Average vapor flow rate into bldg. (Leave blank to calculate) $Q_{soil}$ (L/m) |
|---|---|---|---|---|
| SIL | 1.49 | 0.439 | 0.18 | 5 |

MORE ↓

Lookup Receptor Parameters

| | ENTER Averaging time for carcinogens, $AT_C$ (yrs) | ENTER Averaging time for noncarcinogens, $AT_{NC}$ (yrs) | ENTER Exposure duration, ED (yrs) | ENTER Exposure frequency, EF (days/yr) | ENTER Exposure Time ET (hrs/day) | ENTER Air Exchange Rate ACH $(hour)^{-1}$ |
|---|---|---|---|---|---|---|
| NEW=> Commercial | 70 | 25 | 25 | 250 | 8 | 1 |
| | | | | | (NEW) | (NEW) |

END

**Styrene**

| Diffusivity in air, $D_a$ ($cm^2/s$) | Diffusivity in water, $D_w$ ($cm^2/s$) | Henry's law constant at reference temperature, H (atm-$m^3$/mol) | Henry's law constant reference temperature, $T_R$ ($^oC$) | Enthalpy of vaporization at the normal boiling point, $\Delta H_{v,b}$ (cal/mol) | Normal boiling point, $T_B$ ($^oK$) | Critical temperature, $T_C$ ($^oK$) | Unit risk factor, URF ($\mu g/m^3)^{-1}$ | Reference conc., RfC ($mg/m^3$) | Molecular weight, MW (g/mol) |
|---|---|---|---|---|---|---|---|---|---|
| 7.11E-02 | 8.78E-06 | 2.75E-03 | 25 | 8,737 | 418.31 | 636.00 | 0.0E+00 | 9.0E-01 | 104.15 |

**END**

INTERMEDIATE CALCULATIONS SHEET

**Scenario:** **Commercial**

**Chemical:** **Styrene**

| Source-building separation, $L_T$ (cm) | Vadose zone soil air-filled porosity, $\theta_a^V$ ($cm^3/cm^3$) | Vadose zone effective total fluid saturation, $S_{te}$ ($cm^3/cm^3$) | Vadose zone soil intrinsic permeability, $k_i$ ($cm^2$) | Vadose zone soil relative air permeability, $k_{rg}$ ($cm^2$) | Vadose zone soil effective vapor permeability, $k_v$ ($cm^2$) | Floor-wall seam perimeter, $X_{crack}$ (cm) | Soil gas conc. ($\mu g/m^3$) | Bldg. ventilation rate, $Q_{building}$ ($cm^3/s$) |
|---|---|---|---|---|---|---|---|---|
| 320 | 0.259 | 0.307 | 2.89E-09 | 0.798 | 2.30E-09 | 4,000 | 8.30E+01 | 6.78E+04 |

| Area of enclosed space below grade, $A_B$ ($cm^2$) | Crack-to-total area ratio, $\eta$ (unitless) | Crack depth below grade, $Z_{crack}$ (cm) | Enthalpy of vaporization at ave. soil temperature, $\Delta H_{v,TS}$ (cal/mol) | Henry's law constant at ave. soil temperature, $H_{TS}$ (atm-$m^3$/mol) | Henry's law constant at ave. soil temperature, $H'_{TS}$ (unitless) | Vapor viscosity at ave. soil temperature, $\mu_{TS}$ (g/cm-s) | Vadose zone effective diffusion coefficient, $D^{eff}_V$ ($cm^2/s$) | Diffusion path length, $L_d$ (cm) |
|---|---|---|---|---|---|---|---|---|
| 1.00E+06 | 5.00E-03 | 15 | 10,294 | 2.59E-03 | 1.06E-01 | 1.80E-04 | 4.11E-03 | 320 |

| Convection path length, $L_p$ (cm) | Source vapor conc., $C_{source}$ ($\mu g/m^3$) | Crack radius, $r_{crack}$ (cm) | Average vapor flow rate into bldg., $Q_{soil}$ ($cm^3/s$) | Crack effective diffusion coefficient, $D^{crack}$ ($cm^2/s$) | Area of crack, $A_{crack}$ ($cm^2$) | Exponent of equivalent foundation Peclet number, $exp(Pe^f)$ (unitless) | Infinite source indoor attenuation coefficient, $\alpha$ (unitless) | Infinite source bldg. conc., $C_{building}$ ($\mu g/m^3$) |
|---|---|---|---|---|---|---|---|---|
| 15 | 8.30E+01 | 1.25 | 8.33E+01 | 4.11E-03 | 5.00E+03 | 4.23E+17 | **1.64E-04** | 1.36E-02 |

| Unit risk factor, URF $(\mu g/m^3)^{-1}$ | Reference conc., RfC ($mg/m^3$) |
|---|---|
| NA | 9.0E-01 |

**END**

RESULTS SHEET

**Scenario:** **Commercial**
**Chemical:** **Styrene**

INCREMENTAL RISK CALCULATIONS:

| Incremental risk from vapor intrusion to indoor air, carcinogen (unitless) | Hazard quotient from vapor intrusion to indoor air, noncarcinogen (unitless) |
|---|---|
| **NA** | **3.5E-06** |

**MESSAGE SUMMARY BELOW:**

**END**

USEPA SG-SCREEN
Version 2.0, 04/2003

DTSC Modification
December 2014

# Department of Toxic Substances Control
# Vapor Intrusion Screening Model - Soil Gas

DATA ENTRY SHEET

**Scenario:** Residential
**Chemical:** Tetrachloroethylene

**Results Summary**

| Soil Gas Conc. ($\mu g/m^3$) | Attenuation Factor (unitless) | Indoor Air Conc. ($\mu g/m^3$) | Cancer Risk | Noncancer Hazard |
|---|---|---|---|---|
| 2.40E+01 | 1.8E-04 | 4.3E-03 | 9.1E-09 | 1.2E-04 |

Reset to Defaults

Soil Gas Concentration Data

| ENTER Chemical CAS No. (numbers only, no dashes) | ENTER Soil gas conc., $C_g$ ($\mu g/m^3$) | OR | ENTER Soil gas conc., $C_g$ (ppmv) | Chemical |
|---|---|---|---|---|
| 127184 | 2.40E+01 | | | Tetrachloroethylene |

MORE ↓

| ENTER Depth below grade to bottom of enclosed space floor, $L_F$ (15 or 200 cm) | ENTER Soil gas sampling depth below grade, $L_s$ (cm) | ENTER Average soil temperature, $T_S$ ($^oC$) | ENTER Vadose zone SCS soil type (used to estimate soil vapor permeability) | OR | ENTER User-defined vadose zone soil vapor permeability, $k_v$ ($cm^2$) |
|---|---|---|---|---|---|
| 15 | 457 | 24 | SIL | | |

MORE ↓

| ENTER Vandose zone SCS soil type (Lookup Soil Parameters) | ENTER Vadose zone soil dry bulk density, $\rho_b^A$ ($g/cm^3$) | ENTER Vadose zone soil total porosity, $n^V$ (unitless) | ENTER Vadose zone soil water-filled porosity, $\theta_w^V$ ($cm^3/cm^3$) | ENTER Average vapor flow rate into bldg. (Leave blank to calculate) $Q_{soil}$ (L/m) |
|---|---|---|---|---|
| SIL | 1.49 | 0.439 | 0.18 | 5 |

MORE ↓

Lookup Receptor Parameters

| | ENTER Averaging time for carcinogens, $AT_C$ (yrs) | ENTER Averaging time for noncarcinogens, $AT_{NC}$ (yrs) | ENTER Exposure duration, ED (yrs) | ENTER Exposure frequency, EF (days/yr) | ENTER Exposure Time ET (hrs/day) | ENTER Air Exchange Rate ACH $(hour)^{-1}$ |
|---|---|---|---|---|---|---|
| NEW=> Residential | 70 | 26 | 26 | 350 | 24 (NEW) | 0.5 (NEW) |

END

## Tetrachloroethylene

| Diffusivity in air, $D_a$ ($cm^2/s$) | Diffusivity in water, $D_w$ ($cm^2/s$) | Henry's law constant at reference temperature, H (atm-$m^3$/mol) | Henry's law constant reference temperature, $T_R$ ($^oC$) | Enthalpy of vaporization at the normal boiling point, $\Delta H_{v,b}$ (cal/mol) | Normal boiling point, $T_B$ ($^oK$) | Critical temperature, $T_C$ ($^oK$) | Unit risk factor, URF ($\mu g/m^3)^{-1}$ | Reference conc., RfC ($mg/m^3$) | Molecular weight, MW (g/mol) |
|---|---|---|---|---|---|---|---|---|---|
| 5.05E-02 | 9.46E-06 | 1.77E-02 | 25 | 8,288 | 394.40 | 620.20 | 5.9E-06 | 3.5E-02 | 165.83 |

**END**

**Scenario:** **Residential**

**Chemical:** **Tetrachloroethylene**

| Source-building separation, $L_T$ (cm) | Vadose zone soil air-filled porosity, $\theta_a^V$ ($cm^3/cm^3$) | Vadose zone effective total fluid saturation, $S_{te}$ ($cm^3/cm^3$) | Vadose zone soil intrinsic permeability, $k_i$ ($cm^2$) | Vadose zone soil relative air permeability, $k_{rg}$ ($cm^2$) | Vadose zone soil effective vapor permeability, $k_v$ ($cm^2$) | Floor-wall seam perimeter, $X_{crack}$ (cm) | Soil gas conc. ($\mu g/m^3$) | Bldg. ventilation rate, $Q_{building}$ ($cm^3/s$) |
|---|---|---|---|---|---|---|---|---|
| 442 | 0.259 | 0.307 | 2.89E-09 | 0.798 | 2.30E-09 | 4,000 | 2.40E+01 | 3.39E+04 |

| Area of enclosed space below grade, $A_B$ ($cm^2$) | Crack-to-total area ratio, $\eta$ (unitless) | Crack depth below grade, $Z_{crack}$ (cm) | Enthalpy of vaporization at ave. soil temperature, $\Delta H_{v,TS}$ (cal/mol) | Henry's law constant at ave. soil temperature, $H_{TS}$ (atm-$m^3$/mol) | Henry's law constant at ave. soil temperature, $H'_{TS}$ (unitless) | Vapor viscosity at ave. soil temperature, $\mu_{TS}$ (g/cm-s) | Vadose zone effective diffusion coefficient, $D^{eff}_V$ ($cm^2/s$) | Diffusion path length, $L_d$ (cm) |
|---|---|---|---|---|---|---|---|---|
| 1.00E+06 | 5.00E-03 | 15 | 9,410 | 1.68E-02 | 6.88E-01 | 1.80E-04 | 2.91E-03 | 442 |

| Convection path length, $L_p$ (cm) | Source vapor conc., $C_{source}$ ($\mu g/m^3$) | Crack radius, $r_{crack}$ (cm) | Average vapor flow rate into bldg., $Q_{soil}$ ($cm^3/s$) | Crack effective diffusion coefficient, $D^{crack}$ ($cm^2/s$) | Area of crack, $A_{crack}$ ($cm^2$) | Exponent of equivalent foundation Peclet number, $exp(Pe^f)$ (unitless) | Infinite source indoor attenuation coefficient, $\alpha$ (unitless) | Infinite source bldg. conc., $C_{building}$ ($\mu g/m^3$) |
|---|---|---|---|---|---|---|---|---|
| 15 | 2.40E+01 | 1.25 | 8.33E+01 | 2.91E-03 | 5.00E+03 | 7.00E+24 | **1.80E-04** | 4.33E-03 |

| Unit risk factor, URF $(\mu g/m^3)^{-1}$ | Reference conc., RfC ($mg/m^3$) |
|---|---|
| 5.9E-06 | 3.5E-02 |

**END**

**Scenario:** **Residential**
**Chemical:** **Tetrachloroethylene**

INCREMENTAL RISK CALCULATIONS:

| Incremental risk from vapor intrusion to indoor air, carcinogen (unitless) | Hazard quotient from vapor intrusion to indoor air, noncarcinogen (unitless) |
|---|---|
| **9.1E-09** | **1.2E-04** |

**MESSAGE SUMMARY BELOW:**

**END**

USEPA SG-SCREEN
Version 2.0, 04/2003

DTSC Modification
December 2014

# Department of Toxic Substances Control
# Vapor Intrusion Screening Model - Soil Gas

DATA ENTRY SHEET

**Scenario:** Commercial
**Chemical:** Tetrachloroethylene

**Results Summary**

| Soil Gas Conc. ($\mu g/m^3$) | Attenuation Factor (unitless) | Indoor Air Conc. ($\mu g/m^3$) | Cancer Risk | Noncancer Hazard |
|---|---|---|---|---|
| 2.40E+01 | 9.0E-05 | 2.2E-03 | 1.0E-09 | 1.4E-05 |

Reset to Defaults

Soil Gas Concentration Data

| ENTER Chemical CAS No. (numbers only, no dashes) | ENTER Soil gas conc., $C_g$ ($\mu g/m^3$) | OR | ENTER Soil gas conc., $C_g$ (ppmv) | Chemical |
|---|---|---|---|---|
| 127184 | 2.40E+01 | | | Tetrachloroethylene |

MORE ↓

| ENTER Depth below grade to bottom of enclosed space floor, $L_F$ (15 or 200 cm) | ENTER Soil gas sampling depth below grade, $L_s$ (cm) | ENTER Average soil temperature, $T_S$ ($^oC$) | ENTER Vadose zone SCS soil type (used to estimate soil vapor permeability) | OR | ENTER User-defined vadose zone soil vapor permeability, $k_v$ ($cm^2$) |
|---|---|---|---|---|---|
| 15 | 457 | 24 | SIL | | |

MORE ↓

| ENTER Vandose zone SCS soil type (Lookup Soil Parameters) | ENTER Vadose zone soil dry bulk density, $\rho_b^A$ ($g/cm^3$) | ENTER Vadose zone soil total porosity, $n^V$ (unitless) | ENTER Vadose zone soil water-filled porosity, $\theta_w^V$ ($cm^3/cm^3$) | ENTER Average vapor flow rate into bldg. (Leave blank to calculate) $Q_{soil}$ (L/m) |
|---|---|---|---|---|
| SIL | 1.49 | 0.439 | 0.18 | 5 |

MORE ↓

Lookup Receptor Parameters

| | ENTER Averaging time for carcinogens, $AT_C$ (yrs) | ENTER Averaging time for noncarcinogens, $AT_{NC}$ (yrs) | ENTER Exposure duration, ED (yrs) | ENTER Exposure frequency, EF (days/yr) | ENTER Exposure Time ET (hrs/day) | ENTER Air Exchange Rate ACH $(hour)^{-1}$ |
|---|---|---|---|---|---|---|
| NEW=> Commercial | 70 | 25 | 25 | 250 | 8 | 1 |
| | | | | | (NEW) | (NEW) |

END

## Tetrachloroethylene

| Diffusivity in air, $D_a$ ($cm^2/s$) | Diffusivity in water, $D_w$ ($cm^2/s$) | Henry's law constant at reference temperature, H (atm-$m^3$/mol) | Henry's law constant reference temperature, $T_R$ ($^oC$) | Enthalpy of vaporization at the normal boiling point, $\Delta H_{v,b}$ (cal/mol) | Normal boiling point, $T_B$ ($^oK$) | Critical temperature, $T_C$ ($^oK$) | Unit risk factor, URF ($\mu g/m^3)^{-1}$ | Reference conc., RfC ($mg/m^3$) | Molecular weight, MW (g/mol) |
|---|---|---|---|---|---|---|---|---|---|
| 5.05E-02 | 9.46E-06 | 1.77E-02 | 25 | 8,288 | 394.40 | 620.20 | 5.9E-06 | 3.5E-02 | 165.83 |

**END**

**Scenario:** **Commercial**

**Chemical:** **Tetrachloroethylene**

| Source-building separation, $L_T$ (cm) | Vadose zone soil air-filled porosity, $\theta_a^V$ ($cm^3/cm^3$) | Vadose zone effective total fluid saturation, $S_{te}$ ($cm^3/cm^3$) | Vadose zone soil intrinsic permeability, $k_i$ ($cm^2$) | Vadose zone soil relative air permeability, $k_{rg}$ ($cm^2$) | Vadose zone soil effective vapor permeability, $k_v$ ($cm^2$) | Floor-wall seam perimeter, $X_{crack}$ (cm) | Soil gas conc. ($\mu g/m^3$) | Bldg. ventilation rate, $Q_{building}$ ($cm^3/s$) |
|---|---|---|---|---|---|---|---|---|
| 442 | 0.259 | 0.307 | 2.89E-09 | 0.798 | 2.30E-09 | 4,000 | 2.40E+01 | 6.78E+04 |

| Area of enclosed space below grade, $A_B$ ($cm^2$) | Crack-to-total area ratio, $\eta$ (unitless) | Crack depth below grade, $Z_{crack}$ (cm) | Enthalpy of vaporization at ave. soil temperature, $\Delta H_{v,TS}$ (cal/mol) | Henry's law constant at ave. soil temperature, $H_{TS}$ (atm-$m^3$/mol) | Henry's law constant at ave. soil temperature, $H'_{TS}$ (unitless) | Vapor viscosity at ave. soil temperature, $\mu_{TS}$ (g/cm-s) | Vadose zone effective diffusion coefficient, $D^{eff}_V$ ($cm^2/s$) | Diffusion path length, $L_d$ (cm) |
|---|---|---|---|---|---|---|---|---|
| 1.00E+06 | 5.00E-03 | 15 | 9,410 | 1.68E-02 | 6.88E-01 | 1.80E-04 | 2.91E-03 | 442 |

| Convection path length, $L_p$ (cm) | Source vapor conc., $C_{source}$ ($\mu g/m^3$) | Crack radius, $r_{crack}$ (cm) | Average vapor flow rate into bldg., $Q_{soil}$ ($cm^3/s$) | Crack effective diffusion coefficient, $D^{crack}$ ($cm^2/s$) | Area of crack, $A_{crack}$ ($cm^2$) | Exponent of equivalent foundation Peclet number, $exp(Pe^f)$ (unitless) | Infinite source indoor attenuation coefficient, $\alpha$ (unitless) | Infinite source bldg. conc., $C_{building}$ ($\mu g/m^3$) |
|---|---|---|---|---|---|---|---|---|
| 15 | 2.40E+01 | 1.25 | 8.33E+01 | 2.91E-03 | 5.00E+03 | 7.00E+24 | **9.01E-05** | 2.16E-03 |

| Unit risk factor, URF $(\mu g/m^3)^{-1}$ | Reference conc., RfC ($mg/m^3$) |
|---|---|
| 5.9E-06 | 3.5E-02 |

**END**

**Scenario:** **Commercial**
**Chemical:** **Tetrachloroethylene**

INCREMENTAL RISK CALCULATIONS:

| Incremental risk from vapor intrusion to indoor air, carcinogen (unitless) | Hazard quotient from vapor intrusion to indoor air, noncarcinogen (unitless) |
|---|---|
| **1.0E-09** | **1.4E-05** |

**MESSAGE SUMMARY BELOW:**

**END**

USEPA SG-SCREEN
Version 2.0, 04/2003

DTSC Modification
December 2014

# Department of Toxic Substances Control
# Vapor Intrusion Screening Model - Soil Gas

DATA ENTRY SHEET

**Scenario:** Residential
**Chemical:** Tetrachloroethylene

**Results Summary**

| Soil Gas Conc. ($\mu g/m^3$) | Attenuation Factor (unitless) | Indoor Air Conc. ($\mu g/m^3$) | Cancer Risk | Noncancer Hazard |
|---|---|---|---|---|
| 9.60E+01 | 9.2E-05 | 8.8E-03 | 1.9E-08 | 2.4E-04 |

Reset to Defaults

Soil Gas Concentration Data

| ENTER Chemical CAS No. (numbers only, no dashes) | ENTER Soil gas conc., $C_g$ ($\mu g/m^3$) | OR | ENTER Soil gas conc., $C_g$ (ppmv) | Chemical |
|---|---|---|---|---|
| 127184 | 9.60E+01 | | | Tetrachloroethylene |

MORE ↓

| ENTER Depth below grade to bottom of enclosed space floor, $L_F$ (15 or 200 cm) | ENTER Soil gas sampling depth below grade, $L_s$ (cm) | ENTER Average soil temperature, $T_S$ ($^oC$) | ENTER Vadose zone SCS soil type (used to estimate soil vapor permeability) | OR | ENTER User-defined vadose zone soil vapor permeability, $k_v$ ($cm^2$) |
|---|---|---|---|---|---|
| 15 | 914 | 24 | SIL | | |

MORE ↓

| ENTER Vandose zone SCS soil type (Lookup Soil Parameters) | ENTER Vadose zone soil dry bulk density, $\rho_b^A$ ($g/cm^3$) | ENTER Vadose zone soil total porosity, $n^V$ (unitless) | ENTER Vadose zone soil water-filled porosity, $\theta_w^V$ ($cm^3/cm^3$) | ENTER Average vapor flow rate into bldg. (Leave blank to calculate) $Q_{soil}$ (L/m) |
|---|---|---|---|---|
| SIL | 1.49 | 0.439 | 0.18 | 5 |

MORE ↓

Lookup Receptor Parameters

| | ENTER Averaging time for carcinogens, $AT_C$ (yrs) | ENTER Averaging time for noncarcinogens, $AT_{NC}$ (yrs) | ENTER Exposure duration, ED (yrs) | ENTER Exposure frequency, EF (days/yr) | ENTER Exposure Time ET (hrs/day) | ENTER Air Exchange Rate ACH $(hour)^{-1}$ |
|---|---|---|---|---|---|---|
| NEW=> Residential | 70 | 26 | 26 | 350 | 24 | 0.5 |
| | | | | | (NEW) | (NEW) |

END

## Tetrachloroethylene

| Diffusivity in air, $D_a$ ($cm^2/s$) | Diffusivity in water, $D_w$ ($cm^2/s$) | Henry's law constant at reference temperature, H (atm-$m^3$/mol) | Henry's law constant reference temperature, $T_R$ ($^oC$) | Enthalpy of vaporization at the normal boiling point, $\Delta H_{v,b}$ (cal/mol) | Normal boiling point, $T_B$ ($^oK$) | Critical temperature, $T_C$ ($^oK$) | Unit risk factor, URF ($\mu g/m^3)^{-1}$ | Reference conc., RfC ($mg/m^3$) | Molecular weight, MW (g/mol) |
|---|---|---|---|---|---|---|---|---|---|
| 5.05E-02 | 9.46E-06 | 1.77E-02 | 25 | 8,288 | 394.40 | 620.20 | 5.9E-06 | 3.5E-02 | 165.83 |

**END**

**Scenario:** **Residential**

**Chemical:** **Tetrachloroethylene**

| Source-building separation, $L_T$ (cm) | Vadose zone soil air-filled porosity, $\theta_a^V$ ($cm^3/cm^3$) | Vadose zone effective total fluid saturation, $S_{te}$ ($cm^3/cm^3$) | Vadose zone soil intrinsic permeability, $k_i$ ($cm^2$) | Vadose zone soil relative air permeability, $k_{rg}$ ($cm^2$) | Vadose zone soil effective vapor permeability, $k_v$ ($cm^2$) | Floor-wall seam perimeter, $X_{crack}$ (cm) | Soil gas conc. ($\mu g/m^3$) | Bldg. ventilation rate, $Q_{building}$ ($cm^3/s$) |
|---|---|---|---|---|---|---|---|---|
| 899 | 0.259 | 0.307 | 2.89E-09 | 0.798 | 2.30E-09 | 4,000 | 9.60E+01 | 3.39E+04 |

| Area of enclosed space below grade, $A_B$ ($cm^2$) | Crack-to-total area ratio, $\eta$ (unitless) | Crack depth below grade, $Z_{crack}$ (cm) | Enthalpy of vaporization at ave. soil temperature, $\Delta H_{v,TS}$ (cal/mol) | Henry's law constant at ave. soil temperature, $H_{TS}$ (atm-$m^3$/mol) | Henry's law constant at ave. soil temperature, $H'_{TS}$ (unitless) | Vapor viscosity at ave. soil temperature, $\mu_{TS}$ (g/cm-s) | Vadose zone effective diffusion coefficient, $D^{eff}_V$ ($cm^2/s$) | Diffusion path length, $L_d$ (cm) |
|---|---|---|---|---|---|---|---|---|
| 1.00E+06 | 5.00E-03 | 15 | 9,410 | 1.68E-02 | 6.88E-01 | 1.80E-04 | 2.91E-03 | 899 |

| Convection path length, $L_p$ (cm) | Source vapor conc., $C_{source}$ ($\mu g/m^3$) | Crack radius, $r_{crack}$ (cm) | Average vapor flow rate into bldg., $Q_{soil}$ ($cm^3/s$) | Crack effective diffusion coefficient, $D^{crack}$ ($cm^2/s$) | Area of crack, $A_{crack}$ ($cm^2$) | Exponent of equivalent foundation Peclet number, $exp(Pe^f)$ (unitless) | Infinite source indoor attenuation coefficient, $\alpha$ (unitless) | Infinite source bldg. conc., $C_{building}$ ($\mu g/m^3$) |
|---|---|---|---|---|---|---|---|---|
| 15 | 9.60E+01 | 1.25 | 8.33E+01 | 2.91E-03 | 5.00E+03 | 7.00E+24 | **9.20E-05** | 8.84E-03 |

| Unit risk factor, URF $(\mu g/m^3)^{-1}$ | Reference conc., RfC ($mg/m^3$) |
|---|---|
| 5.9E-06 | 3.5E-02 |

**END**

**Scenario:** **Residential**
**Chemical:** **Tetrachloroethylene**

INCREMENTAL RISK CALCULATIONS:

| Incremental risk from vapor intrusion to indoor air, carcinogen (unitless) | Hazard quotient from vapor intrusion to indoor air, noncarcinogen (unitless) |
|---|---|
| **1.9E-08** | **2.4E-04** |

**MESSAGE SUMMARY BELOW:**

**END**

USEPA SG-SCREEN
Version 2.0, 04/2003

DTSC Modification
December 2014

# Department of Toxic Substances Control
# Vapor Intrusion Screening Model - Soil Gas

DATA ENTRY SHEET

**Scenario:** **Commercial**
**Chemical:** **Tetrachloroethylene**

Reset to Defaults

Soil Gas Concentration Data

| ENTER Chemical CAS No. (numbers only, no dashes) | ENTER Soil gas conc., $C_g$ ($\mu g/m^3$) | OR | ENTER Soil gas conc., $C_g$ (ppmv) | Chemical |
|---|---|---|---|---|
| 127184 | 9.60E+01 | | | Tetrachloroethylene |

**Results Summary**

| Soil Gas Conc. ($\mu g/m^3$) | Attenuation Factor (unitless) | Indoor Air Conc. ($\mu g/m^3$) | Cancer Risk | Noncancer Hazard |
|---|---|---|---|---|
| 9.60E+01 | 4.6E-05 | 4.4E-03 | 2.1E-09 | 2.9E-05 |

MESSAGE: Attenuation factor < 6E-05 is unreasonably low.

MORE ↓

| ENTER Depth below grade to bottom of enclosed space floor, $L_F$ (15 or 200 cm) | ENTER Soil gas sampling depth below grade, $L_s$ (cm) | ENTER Average soil temperature, $T_S$ ($^oC$) | ENTER Vadose zone SCS soil type (used to estimate soil vapor permeability) | OR | ENTER User-defined vadose zone soil vapor permeability, $k_v$ ($cm^2$) |
|---|---|---|---|---|---|
| 15 | 914 | 24 | SIL | | |

MORE ↓

| ENTER Vandose zone SCS soil type (Lookup Soil Parameters) | ENTER Vadose zone soil dry bulk density, $\rho_b^A$ ($g/cm^3$) | ENTER Vadose zone soil total porosity, $n^V$ (unitless) | ENTER Vadose zone soil water-filled porosity, $\theta_w^V$ ($cm^3/cm^3$) | ENTER Average vapor flow rate into bldg. (Leave blank to calculate) $Q_{soil}$ (L/m) |
|---|---|---|---|---|
| SIL | 1.49 | 0.439 | 0.18 | 5 |

MORE ↓

Lookup Receptor Parameters

| | ENTER Averaging time for carcinogens, $AT_C$ (yrs) | ENTER Averaging time for noncarcinogens, $AT_{NC}$ (yrs) | ENTER Exposure duration, ED (yrs) | ENTER Exposure frequency, EF (days/yr) | ENTER Exposure Time ET (hrs/day) | ENTER Air Exchange Rate ACH $(hour)^{-1}$ |
|---|---|---|---|---|---|---|
| NEW=> Commercial | 70 | 25 | 25 | 250 | 8 | 1 |
| | | | | | (NEW) | (NEW) |

END

## Tetrachloroethylene

| Diffusivity in air, $D_a$ ($cm^2/s$) | Diffusivity in water, $D_w$ ($cm^2/s$) | Henry's law constant at reference temperature, H (atm-$m^3$/mol) | Henry's law constant reference temperature, $T_R$ ($^oC$) | Enthalpy of vaporization at the normal boiling point, $\Delta H_{v,b}$ (cal/mol) | Normal boiling point, $T_B$ ($^oK$) | Critical temperature, $T_C$ ($^oK$) | Unit risk factor, URF ($\mu g/m^3)^{-1}$ | Reference conc., RfC ($mg/m^3$) | Molecular weight, MW (g/mol) |
|---|---|---|---|---|---|---|---|---|---|
| 5.05E-02 | 9.46E-06 | 1.77E-02 | 25 | 8,288 | 394.40 | 620.20 | 5.9E-06 | 3.5E-02 | 165.83 |

**END**

**Scenario:** **Commercial**

**Chemical:** **Tetrachloroethylene**

| Source-building separation, $L_T$ (cm) | Vadose zone soil air-filled porosity, $\theta_a^V$ ($cm^3/cm^3$) | Vadose zone effective total fluid saturation, $S_{te}$ ($cm^3/cm^3$) | Vadose zone soil intrinsic permeability, $k_i$ ($cm^2$) | Vadose zone soil relative air permeability, $k_{rg}$ ($cm^2$) | Vadose zone soil effective vapor permeability, $k_v$ ($cm^2$) | Floor-wall seam perimeter, $X_{crack}$ (cm) | Soil gas conc. ($\mu g/m^3$) | Bldg. ventilation rate, $Q_{building}$ ($cm^3/s$) |
|---|---|---|---|---|---|---|---|---|
| 899 | 0.259 | 0.307 | 2.89E-09 | 0.798 | 2.30E-09 | 4,000 | 9.60E+01 | 6.78E+04 |

| Area of enclosed space below grade, $A_B$ ($cm^2$) | Crack-to-total area ratio, $\eta$ (unitless) | Crack depth below grade, $Z_{crack}$ (cm) | Enthalpy of vaporization at ave. soil temperature, $\Delta H_{v,TS}$ (cal/mol) | Henry's law constant at ave. soil temperature, $H_{TS}$ (atm-$m^3$/mol) | Henry's law constant at ave. soil temperature, $H'_{TS}$ (unitless) | Vapor viscosity at ave. soil temperature, $\mu_{TS}$ (g/cm-s) | Vadose zone effective diffusion coefficient, $D^{eff}_V$ ($cm^2/s$) | Diffusion path length, $L_d$ (cm) |
|---|---|---|---|---|---|---|---|---|
| 1.00E+06 | 5.00E-03 | 15 | 9,410 | 1.68E-02 | 6.88E-01 | 1.80E-04 | 2.91E-03 | 899 |

| Convection path length, $L_p$ (cm) | Source vapor conc., $C_{source}$ ($\mu g/m^3$) | Crack radius, $r_{crack}$ (cm) | Average vapor flow rate into bldg., $Q_{soil}$ ($cm^3/s$) | Crack effective diffusion coefficient, $D^{crack}$ ($cm^2/s$) | Area of crack, $A_{crack}$ ($cm^2$) | Exponent of equivalent foundation Peclet number, $exp(Pe^f)$ (unitless) | Infinite source indoor attenuation coefficient, $\alpha$ (unitless) | Infinite source bldg. conc., $C_{building}$ ($\mu g/m^3$) |
|---|---|---|---|---|---|---|---|---|
| 15 | 9.60E+01 | 1.25 | 8.33E+01 | 2.91E-03 | 5.00E+03 | 7.00E+24 | **4.60E-05** | 4.42E-03 |

**Warning: alpha < 6E-05 is unreasonably low.**

| Unit risk factor, URF $(\mu g/m^3)^{-1}$ | Reference conc., RfC ($mg/m^3$) |
|---|---|
| 5.9E-06 | 3.5E-02 |

**END**

**Scenario:** **Commercial**
**Chemical:** **Tetrachloroethylene**

INCREMENTAL RISK CALCULATIONS:

| Incremental risk from vapor intrusion to indoor air, carcinogen (unitless) | Hazard quotient from vapor intrusion to indoor air, noncarcinogen (unitless) |
|---|---|
| **2.1E-09** | **2.9E-05** |

**MESSAGE SUMMARY BELOW:**

**END** MESSAGE: Attenuation factor < 6E-05 is unreasonably low.

USEPA SG-SCREEN
Version 2.0, 04/2003

DTSC Modification
December 2014

# Department of Toxic Substances Control
# Vapor Intrusion Screening Model - Soil Gas

DATA ENTRY SHEET

**Scenario:** Residential
**Chemical:** Tetrachloroethylene

**Results Summary**

| Soil Gas Conc. ($\mu g/m^3$) | Attenuation Factor (unitless) | Indoor Air Conc. ($\mu g/m^3$) | Cancer Risk | Noncancer Hazard |
|---|---|---|---|---|
| 1.70E+02 | 1.8E-04 | 3.1E-02 | 6.4E-08 | 8.4E-04 |

Reset to Defaults

Soil Gas Concentration Data

| ENTER Chemical CAS No. (numbers only, no dashes) | ENTER Soil gas conc., $C_g$ ($\mu g/m^3$) | OR | ENTER Soil gas conc., $C_g$ (ppmv) | Chemical |
|---|---|---|---|---|
| 127184 | 1.70E+02 | | | Tetrachloroethylene |

MORE ↓

| ENTER Depth below grade to bottom of enclosed space floor, $L_F$ (15 or 200 cm) | ENTER Soil gas sampling depth below grade, $L_s$ (cm) | ENTER Average soil temperature, $T_S$ ($^oC$) | ENTER Vadose zone SCS soil type (used to estimate soil vapor permeability) | OR | ENTER User-defined vadose zone soil vapor permeability, $k_v$ ($cm^2$) |
|---|---|---|---|---|---|
| 15 | 457 | 24 | SIL | | |

MORE ↓

| ENTER Vandose zone SCS soil type (Lookup Soil Parameters) | ENTER Vadose zone soil dry bulk density, $\rho_b^A$ ($g/cm^3$) | ENTER Vadose zone soil total porosity, $n^V$ (unitless) | ENTER Vadose zone soil water-filled porosity, $\theta_w^V$ ($cm^3/cm^3$) | ENTER Average vapor flow rate into bldg. (Leave blank to calculate) $Q_{soil}$ (L/m) |
|---|---|---|---|---|
| SIL | 1.49 | 0.439 | 0.18 | 5 |

MORE ↓

Lookup Receptor Parameters

| | ENTER Averaging time for carcinogens, $AT_C$ (yrs) | ENTER Averaging time for noncarcinogens, $AT_{NC}$ (yrs) | ENTER Exposure duration, ED (yrs) | ENTER Exposure frequency, EF (days/yr) | ENTER Exposure Time ET (hrs/day) | ENTER Air Exchange Rate ACH $(hour)^{-1}$ |
|---|---|---|---|---|---|---|
| NEW=> Residential | 70 | 26 | 26 | 350 | 24 | 0.5 |
| | | | | | (NEW) | (NEW) |

END

## Tetrachloroethylene

| Diffusivity in air, $D_a$ ($cm^2/s$) | Diffusivity in water, $D_w$ ($cm^2/s$) | Henry's law constant at reference temperature, H (atm-$m^3$/mol) | Henry's law constant reference temperature, $T_R$ ($^oC$) | Enthalpy of vaporization at the normal boiling point, $\Delta H_{v,b}$ (cal/mol) | Normal boiling point, $T_B$ ($^oK$) | Critical temperature, $T_C$ ($^oK$) | Unit risk factor, URF ($\mu g/m^3)^{-1}$ | Reference conc., RfC ($mg/m^3$) | Molecular weight, MW (g/mol) |
|---|---|---|---|---|---|---|---|---|---|
| 5.05E-02 | 9.46E-06 | 1.77E-02 | 25 | 8,288 | 394.40 | 620.20 | 5.9E-06 | 3.5E-02 | 165.83 |

**END**

**Scenario:** **Residential**

**Chemical:** **Tetrachloroethylene**

| Source-building separation, $L_T$ (cm) | Vadose zone soil air-filled porosity, $\theta_a^V$ ($cm^3/cm^3$) | Vadose zone effective total fluid saturation, $S_{te}$ ($cm^3/cm^3$) | Vadose zone soil intrinsic permeability, $k_i$ ($cm^2$) | Vadose zone soil relative air permeability, $k_{rg}$ ($cm^2$) | Vadose zone soil effective vapor permeability, $k_v$ ($cm^2$) | Floor-wall seam perimeter, $X_{crack}$ (cm) | Soil gas conc. ($\mu g/m^3$) | Bldg. ventilation rate, $Q_{building}$ ($cm^3/s$) |
|---|---|---|---|---|---|---|---|---|
| 442 | 0.259 | 0.307 | 2.89E-09 | 0.798 | 2.30E-09 | 4,000 | 1.70E+02 | 3.39E+04 |

| Area of enclosed space below grade, $A_B$ ($cm^2$) | Crack-to-total area ratio, $\eta$ (unitless) | Crack depth below grade, $Z_{crack}$ (cm) | Enthalpy of vaporization at ave. soil temperature, $\Delta H_{v,TS}$ (cal/mol) | Henry's law constant at ave. soil temperature, $H_{TS}$ (atm-$m^3$/mol) | Henry's law constant at ave. soil temperature, $H'_{TS}$ (unitless) | Vapor viscosity at ave. soil temperature, $\mu_{TS}$ (g/cm-s) | Vadose zone effective diffusion coefficient, $D^{eff}_V$ ($cm^2/s$) | Diffusion path length, $L_d$ (cm) |
|---|---|---|---|---|---|---|---|---|
| 1.00E+06 | 5.00E-03 | 15 | 9,410 | 1.68E-02 | 6.88E-01 | 1.80E-04 | 2.91E-03 | 442 |

| Convection path length, $L_p$ (cm) | Source vapor conc., $C_{source}$ ($\mu g/m^3$) | Crack radius, $r_{crack}$ (cm) | Average vapor flow rate into bldg., $Q_{soil}$ ($cm^3/s$) | Crack effective diffusion coefficient, $D^{crack}$ ($cm^2/s$) | Area of crack, $A_{crack}$ ($cm^2$) | Exponent of equivalent foundation Peclet number, $exp(Pe^f)$ (unitless) | Infinite source indoor attenuation coefficient, $\alpha$ (unitless) | Infinite source bldg. conc., $C_{building}$ ($\mu g/m^3$) |
|---|---|---|---|---|---|---|---|---|
| 15 | 1.70E+02 | 1.25 | 8.33E+01 | 2.91E-03 | 5.00E+03 | 7.00E+24 | **1.80E-04** | 3.06E-02 |

| Unit risk factor, URF $(\mu g/m^3)^{-1}$ | Reference conc., RfC ($mg/m^3$) |
|---|---|
| 5.9E-06 | 3.5E-02 |

**END**

**Scenario:** **Residential**
**Chemical:** **Tetrachloroethylene**

INCREMENTAL RISK CALCULATIONS:

| Incremental risk from vapor intrusion to indoor air, carcinogen (unitless) | Hazard quotient from vapor intrusion to indoor air, noncarcinogen (unitless) |
|---|---|
| **6.4E-08** | **8.4E-04** |

**MESSAGE SUMMARY BELOW:**

**END**

USEPA SG-SCREEN
Version 2.0, 04/2003

DTSC Modification
December 2014

# Department of Toxic Substances Control
# Vapor Intrusion Screening Model - Soil Gas

DATA ENTRY SHEET

**Scenario:** Commercial
**Chemical:** Tetrachloroethylene

**Results Summary**

| Soil Gas Conc. (µg/m$^3$) | Attenuation Factor (unitless) | Indoor Air Conc. (µg/m$^3$) | Cancer Risk | Noncancer Hazard |
|---|---|---|---|---|
| 1.70E+02 | 9.0E-05 | 1.5E-02 | 7.4E-09 | 1.0E-04 |

Reset to Defaults

Soil Gas Concentration Data

| ENTER Chemical CAS No. (numbers only, no dashes) | ENTER Soil gas conc., $C_g$ (µg/m$^3$) | OR | ENTER Soil gas conc., $C_g$ (ppmv) | Chemical |
|---|---|---|---|---|
| 127184 | 1.70E+02 | | | Tetrachloroethylene |

MORE ↓

| ENTER Depth below grade to bottom of enclosed space floor, $L_F$ (15 or 200 cm) | ENTER Soil gas sampling depth below grade, $L_s$ (cm) | ENTER Average soil temperature, $T_S$ (°C) | ENTER Vadose zone SCS soil type (used to estimate soil vapor permeability) | OR | ENTER User-defined vadose zone soil vapor permeability, $k_v$ (cm$^2$) |
|---|---|---|---|---|---|
| 15 | 457 | 24 | SIL | | |

MORE ↓

| ENTER Vandose zone SCS soil type (Lookup Soil Parameters) | ENTER Vadose zone soil dry bulk density, $\rho_b^A$ (g/cm$^3$) | ENTER Vadose zone soil total porosity, $n^V$ (unitless) | ENTER Vadose zone soil water-filled porosity, $\theta_w^V$ (cm$^3$/cm$^3$) | ENTER Average vapor flow rate into bldg. (Leave blank to calculate) $Q_{soil}$ (L/m) |
|---|---|---|---|---|
| SIL | 1.49 | 0.439 | 0.18 | 5 |

MORE ↓

Lookup Receptor Parameters

| | ENTER Averaging time for carcinogens, $AT_C$ (yrs) | ENTER Averaging time for noncarcinogens, $AT_{NC}$ (yrs) | ENTER Exposure duration, ED (yrs) | ENTER Exposure frequency, EF (days/yr) | ENTER Exposure Time ET (hrs/day) | ENTER Air Exchange Rate ACH (hour)$^{-1}$ |
|---|---|---|---|---|---|---|
| NEW=> Commercial | 70 | 25 | 25 | 250 | 8 | 1 |
| | | | | | (NEW) | (NEW) |

END

## Tetrachloroethylene

| Diffusivity in air, $D_a$ ($cm^2/s$) | Diffusivity in water, $D_w$ ($cm^2/s$) | Henry's law constant at reference temperature, H (atm-$m^3$/mol) | Henry's law constant reference temperature, $T_R$ ($^oC$) | Enthalpy of vaporization at the normal boiling point, $\Delta H_{v,b}$ (cal/mol) | Normal boiling point, $T_B$ ($^oK$) | Critical temperature, $T_C$ ($^oK$) | Unit risk factor, URF ($\mu g/m^3)^{-1}$ | Reference conc., RfC ($mg/m^3$) | Molecular weight, MW (g/mol) |
|---|---|---|---|---|---|---|---|---|---|
| 5.05E-02 | 9.46E-06 | 1.77E-02 | 25 | 8,288 | 394.40 | 620.20 | 5.9E-06 | 3.5E-02 | 165.83 |

**END**

**Scenario:** **Commercial**

**Chemical:** **Tetrachloroethylene**

| Source-building separation, $L_T$ (cm) | Vadose zone soil air-filled porosity, $\theta_a^V$ ($cm^3/cm^3$) | Vadose zone effective total fluid saturation, $S_{te}$ ($cm^3/cm^3$) | Vadose zone soil intrinsic permeability, $k_i$ ($cm^2$) | Vadose zone soil relative air permeability, $k_{rg}$ ($cm^2$) | Vadose zone soil effective vapor permeability, $k_v$ ($cm^2$) | Floor-wall seam perimeter, $X_{crack}$ (cm) | Soil gas conc. ($\mu g/m^3$) | Bldg. ventilation rate, $Q_{building}$ ($cm^3/s$) |
|---|---|---|---|---|---|---|---|---|
| 442 | 0.259 | 0.307 | 2.89E-09 | 0.798 | 2.30E-09 | 4,000 | 1.70E+02 | 6.78E+04 |

| Area of enclosed space below grade, $A_B$ ($cm^2$) | Crack-to-total area ratio, $\eta$ (unitless) | Crack depth below grade, $Z_{crack}$ (cm) | Enthalpy of vaporization at ave. soil temperature, $\Delta H_{v,TS}$ (cal/mol) | Henry's law constant at ave. soil temperature, $H_{TS}$ (atm-$m^3$/mol) | Henry's law constant at ave. soil temperature, $H'_{TS}$ (unitless) | Vapor viscosity at ave. soil temperature, $\mu_{TS}$ (g/cm-s) | Vadose zone effective diffusion coefficient, $D^{eff}_V$ ($cm^2/s$) | Diffusion path length, $L_d$ (cm) |
|---|---|---|---|---|---|---|---|---|
| 1.00E+06 | 5.00E-03 | 15 | 9,410 | 1.68E-02 | 6.88E-01 | 1.80E-04 | 2.91E-03 | 442 |

| Convection path length, $L_p$ (cm) | Source vapor conc., $C_{source}$ ($\mu g/m^3$) | Crack radius, $r_{crack}$ (cm) | Average vapor flow rate into bldg., $Q_{soil}$ ($cm^3/s$) | Crack effective diffusion coefficient, $D^{crack}$ ($cm^2/s$) | Area of crack, $A_{crack}$ ($cm^2$) | Exponent of equivalent foundation Peclet number, $exp(Pe^f)$ (unitless) | Infinite source indoor attenuation coefficient, $\alpha$ (unitless) | Infinite source bldg. conc., $C_{building}$ ($\mu g/m^3$) |
|---|---|---|---|---|---|---|---|---|
| 15 | 1.70E+02 | 1.25 | 8.33E+01 | 2.91E-03 | 5.00E+03 | 7.00E+24 | **9.01E-05** | 1.53E-02 |

| Unit risk factor, URF $(\mu g/m^3)^{-1}$ | Reference conc., RfC ($mg/m^3$) |
|---|---|
| 5.9E-06 | 3.5E-02 |

**END**

**Scenario:** **Commercial**
**Chemical:** **Tetrachloroethylene**

INCREMENTAL RISK CALCULATIONS:

| Incremental risk from vapor intrusion to indoor air, carcinogen (unitless) | Hazard quotient from vapor intrusion to indoor air, noncarcinogen (unitless) |
|---|---|
| **7.4E-09** | **1.0E-04** |

**MESSAGE SUMMARY BELOW:**

**END**

USEPA SG-SCREEN
Version 2.0, 04/2003

DTSC Modification
December 2014

# Department of Toxic Substances Control
# Vapor Intrusion Screening Model - Soil Gas

DATA ENTRY SHEET

**Scenario:** Residential
**Chemical:** Tetrachloroethylene

| Results Summary | | | | |
|---|---|---|---|---|
| Soil Gas Conc. ($\mu g/m^3$) | Attenuation Factor (unitless) | Indoor Air Conc. ($\mu g/m^3$) | Cancer Risk | Noncancer Hazard |
| 1.40E+03 | 9.2E-05 | 1.3E-01 | 2.7E-07 | 3.5E-03 |

Reset to Defaults

Soil Gas Concentration Data

| ENTER Chemical CAS No. (numbers only, no dashes) | ENTER Soil gas conc., $C_g$ ($\mu g/m^3$) | OR | ENTER Soil gas conc., $C_g$ (ppmv) | Chemical |
|---|---|---|---|---|
| 127184 | 1.40E+03 | | | Tetrachloroethylene |

MORE ↓

| ENTER Depth below grade to bottom of enclosed space floor, $L_F$ (15 or 200 cm) | ENTER Soil gas sampling depth below grade, $L_s$ (cm) | ENTER Average soil temperature, $T_S$ ($^oC$) | ENTER Vadose zone SCS soil type (used to estimate soil vapor permeability) | OR | ENTER User-defined vadose zone soil vapor permeability, $k_v$ ($cm^2$) |
|---|---|---|---|---|---|
| 15 | 914 | 24 | SIL | | |

MORE ↓

| ENTER Vandose zone SCS soil type (Lookup Soil Parameters) | ENTER Vadose zone soil dry bulk density, $\rho_b^A$ ($g/cm^3$) | ENTER Vadose zone soil total porosity, $n^V$ (unitless) | ENTER Vadose zone soil water-filled porosity, $\theta_w^V$ ($cm^3/cm^3$) | ENTER Average vapor flow rate into bldg. (Leave blank to calculate) $Q_{soil}$ (L/m) |
|---|---|---|---|---|
| SIL | 1.49 | 0.439 | 0.18 | 5 |

MORE ↓

Lookup Receptor Parameters

| | ENTER Averaging time for carcinogens, $AT_C$ (yrs) | ENTER Averaging time for noncarcinogens, $AT_{NC}$ (yrs) | ENTER Exposure duration, ED (yrs) | ENTER Exposure frequency, EF (days/yr) | ENTER Exposure Time ET (hrs/day) | ENTER Air Exchange Rate ACH $(hour)^{-1}$ |
|---|---|---|---|---|---|---|
| NEW=> Residential | 70 | 26 | 26 | 350 | 24 (NEW) | 0.5 (NEW) |

END

## Tetrachloroethylene

| Diffusivity in air, $D_a$ ($cm^2/s$) | Diffusivity in water, $D_w$ ($cm^2/s$) | Henry's law constant at reference temperature, H (atm-$m^3$/mol) | Henry's law constant reference temperature, $T_R$ ($^oC$) | Enthalpy of vaporization at the normal boiling point, $\Delta H_{v,b}$ (cal/mol) | Normal boiling point, $T_B$ ($^oK$) | Critical temperature, $T_C$ ($^oK$) | Unit risk factor, URF ($\mu g/m^3)^{-1}$ | Reference conc., RfC ($mg/m^3$) | Molecular weight, MW (g/mol) |
|---|---|---|---|---|---|---|---|---|---|
| 5.05E-02 | 9.46E-06 | 1.77E-02 | 25 | 8,288 | 394.40 | 620.20 | 5.9E-06 | 3.5E-02 | 165.83 |

**END**

INTERMEDIATE CALCULATIONS SHEET

**Scenario:** **Residential**

**Chemical:** **Tetrachloroethylene**

| Source-building separation, $L_T$ (cm) | Vadose zone soil air-filled porosity, $\theta_a^V$ ($cm^3/cm^3$) | Vadose zone effective total fluid saturation, $S_{te}$ ($cm^3/cm^3$) | Vadose zone soil intrinsic permeability, $k_i$ ($cm^2$) | Vadose zone soil relative air permeability, $k_{rg}$ ($cm^2$) | Vadose zone soil effective vapor permeability, $k_v$ ($cm^2$) | Floor-wall seam perimeter, $X_{crack}$ (cm) | Soil gas conc. ($\mu g/m^3$) | Bldg. ventilation rate, $Q_{building}$ ($cm^3/s$) |
|---|---|---|---|---|---|---|---|---|
| 899 | 0.259 | 0.307 | 2.89E-09 | 0.798 | 2.30E-09 | 4,000 | 1.40E+03 | 3.39E+04 |

| Area of enclosed space below grade, $A_B$ ($cm^2$) | Crack-to-total area ratio, $\eta$ (unitless) | Crack depth below grade, $Z_{crack}$ (cm) | Enthalpy of vaporization at ave. soil temperature, $\Delta H_{v,TS}$ (cal/mol) | Henry's law constant at ave. soil temperature, $H_{TS}$ (atm-$m^3$/mol) | Henry's law constant at ave. soil temperature, $H'_{TS}$ (unitless) | Vapor viscosity at ave. soil temperature, $\mu_{TS}$ (g/cm-s) | Vadose zone effective diffusion coefficient, $D^{eff}_V$ ($cm^2/s$) | Diffusion path length, $L_d$ (cm) |
|---|---|---|---|---|---|---|---|---|
| 1.00E+06 | 5.00E-03 | 15 | 9,410 | 1.68E-02 | 6.88E-01 | 1.80E-04 | 2.91E-03 | 899 |

| Convection path length, $L_p$ (cm) | Source vapor conc., $C_{source}$ ($\mu g/m^3$) | Crack radius, $r_{crack}$ (cm) | Average vapor flow rate into bldg., $Q_{soil}$ ($cm^3/s$) | Crack effective diffusion coefficient, $D^{crack}$ ($cm^2/s$) | Area of crack, $A_{crack}$ ($cm^2$) | Exponent of equivalent foundation Peclet number, $exp(Pe^f)$ (unitless) | Infinite source indoor attenuation coefficient, $\alpha$ (unitless) | Infinite source bldg. conc., $C_{building}$ ($\mu g/m^3$) |
|---|---|---|---|---|---|---|---|---|
| 15 | 1.40E+03 | 1.25 | 8.33E+01 | 2.91E-03 | 5.00E+03 | 7.00E+24 | **9.20E-05** | 1.29E-01 |

| Unit risk factor, URF $(\mu g/m^3)^{-1}$ | Reference conc., RfC ($mg/m^3$) |
|---|---|
| 5.9E-06 | 3.5E-02 |

**END**

**Scenario:** **Residential**
**Chemical:** **Tetrachloroethylene**

INCREMENTAL RISK CALCULATIONS:

| Incremental risk from vapor intrusion to indoor air, carcinogen (unitless) | Hazard quotient from vapor intrusion to indoor air, noncarcinogen (unitless) |
|---|---|
| **2.7E-07** | **3.5E-03** |

**MESSAGE SUMMARY BELOW:**

**END**

USEPA SG-SCREEN
Version 2.0, 04/2003

DTSC Modification
December 2014

# Department of Toxic Substances Control
# Vapor Intrusion Screening Model - Soil Gas

DATA ENTRY SHEET

**Scenario:** Commercial
**Chemical:** Tetrachloroethylene

## Results Summary

| Soil Gas Conc. ($\mu g/m^3$) | Attenuation Factor (unitless) | Indoor Air Conc. ($\mu g/m^3$) | Cancer Risk | Noncancer Hazard |
|---|---|---|---|---|
| 1.40E+03 | 4.6E-05 | 6.4E-02 | 3.1E-08 | 4.2E-04 |

MESSAGE: Attenuation factor < 6E-05 is unreasonably low.

Reset to Defaults

Soil Gas Concentration Data

| ENTER Chemical CAS No. (numbers only, no dashes) | ENTER Soil gas conc., $C_g$ ($\mu g/m^3$) | OR | ENTER Soil gas conc., $C_g$ (ppmv) | Chemical |
|---|---|---|---|---|
| 127184 | 1.40E+03 | | | Tetrachloroethylene |

MORE ↓

| ENTER Depth below grade to bottom of enclosed space floor, $L_F$ (15 or 200 cm) | ENTER Soil gas sampling depth below grade, $L_s$ (cm) | ENTER Average soil temperature, $T_S$ ($^oC$) | ENTER Vadose zone SCS soil type (used to estimate soil vapor permeability) | OR | ENTER User-defined vadose zone soil vapor permeability, $k_v$ ($cm^2$) |
|---|---|---|---|---|---|
| 15 | 914 | 24 | SIL | | |

MORE ↓

| ENTER Vandose zone SCS soil type (Lookup Soil Parameters) | ENTER Vadose zone soil dry bulk density, $\rho_b^A$ ($g/cm^3$) | ENTER Vadose zone soil total porosity, $n^V$ (unitless) | ENTER Vadose zone soil water-filled porosity, $\theta_w^V$ ($cm^3/cm^3$) | ENTER Average vapor flow rate into bldg. (Leave blank to calculate) $Q_{soil}$ (L/m) |
|---|---|---|---|---|
| SIL | 1.49 | 0.439 | 0.18 | 5 |

MORE ↓

Lookup Receptor Parameters

| | ENTER Averaging time for carcinogens, $AT_C$ (yrs) | ENTER Averaging time for noncarcinogens, $AT_{NC}$ (yrs) | ENTER Exposure duration, ED (yrs) | ENTER Exposure frequency, EF (days/yr) | ENTER Exposure Time ET (hrs/day) | ENTER Air Exchange Rate ACH $(hour)^{-1}$ |
|---|---|---|---|---|---|---|
| NEW=> Commercial | 70 | 25 | 25 | 250 | 8 | 1 |
| | | | | | (NEW) | (NEW) |

END

## Tetrachloroethylene

| Diffusivity in air, $D_a$ ($cm^2/s$) | Diffusivity in water, $D_w$ ($cm^2/s$) | Henry's law constant at reference temperature, H (atm-$m^3$/mol) | Henry's law constant reference temperature, $T_R$ ($^oC$) | Enthalpy of vaporization at the normal boiling point, $\Delta H_{v,b}$ (cal/mol) | Normal boiling point, $T_B$ ($^oK$) | Critical temperature, $T_C$ ($^oK$) | Unit risk factor, URF ($\mu g/m^3)^{-1}$ | Reference conc., RfC ($mg/m^3$) | Molecular weight, MW (g/mol) |
|---|---|---|---|---|---|---|---|---|---|
| 5.05E-02 | 9.46E-06 | 1.77E-02 | 25 | 8,288 | 394.40 | 620.20 | 5.9E-06 | 3.5E-02 | 165.83 |

**END**

**Scenario:** **Commercial**

**Chemical:** **Tetrachloroethylene**

| Source-building separation, $L_T$ (cm) | Vadose zone soil air-filled porosity, $\theta_a^V$ ($cm^3/cm^3$) | Vadose zone effective total fluid saturation, $S_{te}$ ($cm^3/cm^3$) | Vadose zone soil intrinsic permeability, $k_i$ ($cm^2$) | Vadose zone soil relative air permeability, $k_{rg}$ ($cm^2$) | Vadose zone soil effective vapor permeability, $k_v$ ($cm^2$) | Floor-wall seam perimeter, $X_{crack}$ (cm) | Soil gas conc. ($\mu g/m^3$) | Bldg. ventilation rate, $Q_{building}$ ($cm^3/s$) |
|---|---|---|---|---|---|---|---|---|
| 899 | 0.259 | 0.307 | 2.89E-09 | 0.798 | 2.30E-09 | 4,000 | 1.40E+03 | 6.78E+04 |

| Area of enclosed space below grade, $A_B$ ($cm^2$) | Crack-to-total area ratio, $\eta$ (unitless) | Crack depth below grade, $Z_{crack}$ (cm) | Enthalpy of vaporization at ave. soil temperature, $\Delta H_{v,TS}$ (cal/mol) | Henry's law constant at ave. soil temperature, $H_{TS}$ (atm-$m^3$/mol) | Henry's law constant at ave. soil temperature, $H'_{TS}$ (unitless) | Vapor viscosity at ave. soil temperature, $\mu_{TS}$ (g/cm-s) | Vadose zone effective diffusion coefficient, $D^{eff}_V$ ($cm^2/s$) | Diffusion path length, $L_d$ (cm) |
|---|---|---|---|---|---|---|---|---|
| 1.00E+06 | 5.00E-03 | 15 | 9,410 | 1.68E-02 | 6.88E-01 | 1.80E-04 | 2.91E-03 | 899 |

| Convection path length, $L_p$ (cm) | Source vapor conc., $C_{source}$ ($\mu g/m^3$) | Crack radius, $r_{crack}$ (cm) | Average vapor flow rate into bldg., $Q_{soil}$ ($cm^3/s$) | Crack effective diffusion coefficient, $D^{crack}$ ($cm^2/s$) | Area of crack, $A_{crack}$ ($cm^2$) | Exponent of equivalent foundation Peclet number, $exp(Pe^f)$ (unitless) | Infinite source indoor attenuation coefficient, $\alpha$ (unitless) | Infinite source bldg. conc., $C_{building}$ ($\mu g/m^3$) |
|---|---|---|---|---|---|---|---|---|
| 15 | 1.40E+03 | 1.25 | 8.33E+01 | 2.91E-03 | 5.00E+03 | 7.00E+24 | **4.60E-05** | 6.44E-02 |

**Warning: alpha < 6E-05 is unreasonably low.**

| Unit risk factor, URF $(\mu g/m^3)^{-1}$ | Reference conc., RfC ($mg/m^3$) |
|---|---|
| 5.9E-06 | 3.5E-02 |

**END**

**Scenario:** **Commercial**
**Chemical:** **Tetrachloroethylene**

INCREMENTAL RISK CALCULATIONS:

| Incremental risk from vapor intrusion to indoor air, carcinogen (unitless) | Hazard quotient from vapor intrusion to indoor air, noncarcinogen (unitless) |
|---|---|
| **3.1E-08** | **4.2E-04** |

**MESSAGE SUMMARY BELOW:**

**END** MESSAGE: Attenuation factor < 6E-05 is unreasonably low.

USEPA SG-SCREEN
Version 2.0, 04/2003

DTSC Modification
December 2014

# Department of Toxic Substances Control
# Vapor Intrusion Screening Model - Soil Gas

DATA ENTRY SHEET

**Scenario:** Residential
**Chemical:** Tetrachloroethylene

**Results Summary**

| Soil Gas Conc. ($\mu g/m^3$) | Attenuation Factor (unitless) | Indoor Air Conc. ($\mu g/m^3$) | Cancer Risk | Noncancer Hazard |
|---|---|---|---|---|
| 6.10E+02 | 5.0E-04 | 3.0E-01 | 6.4E-07 | 8.4E-03 |

Reset to Defaults

Soil Gas Concentration Data

| ENTER Chemical CAS No. (numbers only, no dashes) | ENTER Soil gas conc., $C_g$ ($\mu g/m^3$) | OR | ENTER Soil gas conc., $C_g$ (ppmv) | Chemical |
|---|---|---|---|---|
| 127184 | 6.10E+02 | | | Tetrachloroethylene |

MORE ↓

| ENTER Depth below grade to bottom of enclosed space floor, $L_F$ (15 or 200 cm) | ENTER Soil gas sampling depth below grade, $L_s$ (cm) | ENTER Average soil temperature, $T_S$ ($^oC$) | ENTER Vadose zone SCS soil type (used to estimate soil vapor permeability) | OR | ENTER User-defined vadose zone soil vapor permeability, $k_v$ ($cm^2$) |
|---|---|---|---|---|---|
| 15 | 152 | 24 | SIL | | |

MORE ↓

| ENTER Vandose zone SCS soil type (Lookup Soil Parameters) | ENTER Vadose zone soil dry bulk density, $\rho_b^A$ ($g/cm^3$) | ENTER Vadose zone soil total porosity, $n^V$ (unitless) | ENTER Vadose zone soil water-filled porosity, $\theta_w^V$ ($cm^3/cm^3$) | ENTER Average vapor flow rate into bldg. (Leave blank to calculate) $Q_{soil}$ (L/m) |
|---|---|---|---|---|
| SIL | 1.49 | 0.439 | 0.18 | 5 |

MORE ↓

Lookup Receptor Parameters

| | ENTER Averaging time for carcinogens, $AT_C$ (yrs) | ENTER Averaging time for noncarcinogens, $AT_{NC}$ (yrs) | ENTER Exposure duration, ED (yrs) | ENTER Exposure frequency, EF (days/yr) | ENTER Exposure Time ET (hrs/day) | ENTER Air Exchange Rate ACH $(hour)^{-1}$ |
|---|---|---|---|---|---|---|
| NEW=> Residential | 70 | 26 | 26 | 350 | 24 (NEW) | 0.5 (NEW) |

END

## Tetrachloroethylene

| Diffusivity in air, $D_a$ ($cm^2/s$) | Diffusivity in water, $D_w$ ($cm^2/s$) | Henry's law constant at reference temperature, H (atm-$m^3$/mol) | Henry's law constant reference temperature, $T_R$ ($^oC$) | Enthalpy of vaporization at the normal boiling point, $\Delta H_{v,b}$ (cal/mol) | Normal boiling point, $T_B$ ($^oK$) | Critical temperature, $T_C$ ($^oK$) | Unit risk factor, URF ($\mu g/m^3)^{-1}$ | Reference conc., RfC ($mg/m^3$) | Molecular weight, MW (g/mol) |
|---|---|---|---|---|---|---|---|---|---|
| 5.05E-02 | 9.46E-06 | 1.77E-02 | 25 | 8,288 | 394.40 | 620.20 | 5.9E-06 | 3.5E-02 | 165.83 |

**END**

**Scenario:** **Residential**

**Chemical:** **Tetrachloroethylene**

| Source-building separation, $L_T$ (cm) | Vadose zone soil air-filled porosity, $\theta_a^V$ ($cm^3/cm^3$) | Vadose zone effective total fluid saturation, $S_{te}$ ($cm^3/cm^3$) | Vadose zone soil intrinsic permeability, $k_i$ ($cm^2$) | Vadose zone soil relative air permeability, $k_{rg}$ ($cm^2$) | Vadose zone soil effective vapor permeability, $k_v$ ($cm^2$) | Floor-wall seam perimeter, $X_{crack}$ (cm) | Soil gas conc. ($\mu g/m^3$) | Bldg. ventilation rate, $Q_{building}$ ($cm^3/s$) |
|---|---|---|---|---|---|---|---|---|
| 137 | 0.259 | 0.307 | 2.89E-09 | 0.798 | 2.30E-09 | 4,000 | 6.10E+02 | 3.39E+04 |

| Area of enclosed space below grade, $A_B$ ($cm^2$) | Crack-to-total area ratio, $\eta$ (unitless) | Crack depth below grade, $Z_{crack}$ (cm) | Enthalpy of vaporization at ave. soil temperature, $\Delta H_{v,TS}$ (cal/mol) | Henry's law constant at ave. soil temperature, $H_{TS}$ (atm-$m^3$/mol) | Henry's law constant at ave. soil temperature, $H'_{TS}$ (unitless) | Vapor viscosity at ave. soil temperature, $\mu_{TS}$ (g/cm-s) | Vadose zone effective diffusion coefficient, $D^{eff}_V$ ($cm^2/s$) | Diffusion path length, $L_d$ (cm) |
|---|---|---|---|---|---|---|---|---|
| 1.00E+06 | 5.00E-03 | 15 | 9,410 | 1.68E-02 | 6.88E-01 | 1.80E-04 | 2.91E-03 | 137 |

| Convection path length, $L_p$ (cm) | Source vapor conc., $C_{source}$ ($\mu g/m^3$) | Crack radius, $r_{crack}$ (cm) | Average vapor flow rate into bldg., $Q_{soil}$ ($cm^3/s$) | Crack effective diffusion coefficient, $D^{crack}$ ($cm^2/s$) | Area of crack, $A_{crack}$ ($cm^2$) | Exponent of equivalent foundation Peclet number, $exp(Pe^f)$ (unitless) | Infinite source indoor attenuation coefficient, $\alpha$ (unitless) | Infinite source bldg. conc., $C_{building}$ ($\mu g/m^3$) |
|---|---|---|---|---|---|---|---|---|
| 15 | 6.10E+02 | 1.25 | 8.33E+01 | 2.91E-03 | 5.00E+03 | 7.00E+24 | **5.00E-04** | 3.05E-01 |

| Unit risk factor, URF $(\mu g/m^3)^{-1}$ | Reference conc., RfC ($mg/m^3$) |
|---|---|
| 5.9E-06 | 3.5E-02 |

**END**

**Scenario:** **Residential**
**Chemical:** **Tetrachloroethylene**

INCREMENTAL RISK CALCULATIONS:

| Incremental risk from vapor intrusion to indoor air, carcinogen (unitless) | Hazard quotient from vapor intrusion to indoor air, noncarcinogen (unitless) |
|---|---|
| **6.4E-07** | **8.4E-03** |

**MESSAGE SUMMARY BELOW:**

**END**

USEPA SG-SCREEN
Version 2.0, 04/2003

DTSC Modification
December 2014

# Department of Toxic Substances Control
# Vapor Intrusion Screening Model - Soil Gas

DATA ENTRY SHEET

**Scenario:** Commercial
**Chemical:** Tetrachloroethylene

**Results Summary**

| Soil Gas Conc. ($\mu g/m^3$) | Attenuation Factor (unitless) | Indoor Air Conc. ($\mu g/m^3$) | Cancer Risk | Noncancer Hazard |
|---|---|---|---|---|
| 6.10E+02 | 2.5E-04 | 1.5E-01 | 7.3E-08 | 9.9E-04 |

Reset to Defaults

Soil Gas Concentration Data

| ENTER Chemical CAS No. (numbers only, no dashes) | ENTER Soil gas conc., $C_g$ ($\mu g/m^3$) | OR | ENTER Soil gas conc., $C_g$ (ppmv) | Chemical |
|---|---|---|---|---|
| 127184 | 6.10E+02 | | | Tetrachloroethylene |

MORE ↓

| ENTER Depth below grade to bottom of enclosed space floor, $L_F$ (15 or 200 cm) | ENTER Soil gas sampling depth below grade, $L_s$ (cm) | ENTER Average soil temperature, $T_S$ ($^oC$) | ENTER Vadose zone SCS soil type (used to estimate soil vapor permeability) | OR | ENTER User-defined vadose zone soil vapor permeability, $k_v$ ($cm^2$) |
|---|---|---|---|---|---|
| 15 | 152 | 24 | SIL | | |

MORE ↓

| ENTER Vandose zone SCS soil type (Lookup Soil Parameters) | ENTER Vadose zone soil dry bulk density, $\rho_b^A$ ($g/cm^3$) | ENTER Vadose zone soil total porosity, $n^V$ (unitless) | ENTER Vadose zone soil water-filled porosity, $\theta_w^V$ ($cm^3/cm^3$) | ENTER Average vapor flow rate into bldg. (Leave blank to calculate) $Q_{soil}$ (L/m) |
|---|---|---|---|---|
| SIL | 1.49 | 0.439 | 0.18 | 5 |

MORE ↓

Lookup Receptor Parameters

| | ENTER Averaging time for carcinogens, $AT_C$ (yrs) | ENTER Averaging time for noncarcinogens, $AT_{NC}$ (yrs) | ENTER Exposure duration, ED (yrs) | ENTER Exposure frequency, EF (days/yr) | ENTER Exposure Time ET (hrs/day) | ENTER Air Exchange Rate ACH $(hour)^{-1}$ |
|---|---|---|---|---|---|---|
| NEW=> Commercial | 70 | 25 | 25 | 250 | 8 | 1 |
| | | | | | (NEW) | (NEW) |

END

## Tetrachloroethylene

| Diffusivity in air, $D_a$ ($cm^2/s$) | Diffusivity in water, $D_w$ ($cm^2/s$) | Henry's law constant at reference temperature, H (atm-$m^3$/mol) | Henry's law constant reference temperature, $T_R$ ($^oC$) | Enthalpy of vaporization at the normal boiling point, $\Delta H_{v,b}$ (cal/mol) | Normal boiling point, $T_B$ ($^oK$) | Critical temperature, $T_C$ ($^oK$) | Unit risk factor, URF ($\mu g/m^3)^{-1}$ | Reference conc., RfC ($mg/m^3$) | Molecular weight, MW (g/mol) |
|---|---|---|---|---|---|---|---|---|---|
| 5.05E-02 | 9.46E-06 | 1.77E-02 | 25 | 8,288 | 394.40 | 620.20 | 5.9E-06 | 3.5E-02 | 165.83 |

**END**

**Scenario:** **Commercial**

**Chemical:** **Tetrachloroethylene**

| Source-building separation, $L_T$ (cm) | Vadose zone soil air-filled porosity, $\theta_a^V$ ($cm^3/cm^3$) | Vadose zone effective total fluid saturation, $S_{te}$ ($cm^3/cm^3$) | Vadose zone soil intrinsic permeability, $k_i$ ($cm^2$) | Vadose zone soil relative air permeability, $k_{rg}$ ($cm^2$) | Vadose zone soil effective vapor permeability, $k_v$ ($cm^2$) | Floor-wall seam perimeter, $X_{crack}$ (cm) | Soil gas conc. ($\mu g/m^3$) | Bldg. ventilation rate, $Q_{building}$ ($cm^3/s$) |
|---|---|---|---|---|---|---|---|---|
| 137 | 0.259 | 0.307 | 2.89E-09 | 0.798 | 2.30E-09 | 4,000 | 6.10E+02 | 6.78E+04 |

| Area of enclosed space below grade, $A_B$ ($cm^2$) | Crack-to-total area ratio, $\eta$ (unitless) | Crack depth below grade, $Z_{crack}$ (cm) | Enthalpy of vaporization at ave. soil temperature, $\Delta H_{v,TS}$ (cal/mol) | Henry's law constant at ave. soil temperature, $H_{TS}$ (atm-$m^3$/mol) | Henry's law constant at ave. soil temperature, $H'_{TS}$ (unitless) | Vapor viscosity at ave. soil temperature, $\mu_{TS}$ (g/cm-s) | Vadose zone effective diffusion coefficient, $D^{eff}_V$ ($cm^2/s$) | Diffusion path length, $L_d$ (cm) |
|---|---|---|---|---|---|---|---|---|
| 1.00E+06 | 5.00E-03 | 15 | 9,410 | 1.68E-02 | 6.88E-01 | 1.80E-04 | 2.91E-03 | 137 |

| Convection path length, $L_p$ (cm) | Source vapor conc., $C_{source}$ ($\mu g/m^3$) | Crack radius, $r_{crack}$ (cm) | Average vapor flow rate into bldg., $Q_{soil}$ ($cm^3/s$) | Crack effective diffusion coefficient, $D^{crack}$ ($cm^2/s$) | Area of crack, $A_{crack}$ ($cm^2$) | Exponent of equivalent foundation Peclet number, $exp(Pe^f)$ (unitless) | Infinite source indoor attenuation coefficient, $\alpha$ (unitless) | Infinite source bldg. conc., $C_{building}$ ($\mu g/m^3$) |
|---|---|---|---|---|---|---|---|---|
| 15 | 6.10E+02 | 1.25 | 8.33E+01 | 2.91E-03 | 5.00E+03 | 7.00E+24 | **2.50E-04** | 1.52E-01 |

| Unit risk factor, URF $(\mu g/m^3)^{-1}$ | Reference conc., RfC ($mg/m^3$) |
|---|---|
| 5.9E-06 | 3.5E-02 |

**END**

**Scenario:** **Commercial**
**Chemical:** **Tetrachloroethylene**

INCREMENTAL RISK CALCULATIONS:

| Incremental risk from vapor intrusion to indoor air, carcinogen (unitless) | Hazard quotient from vapor intrusion to indoor air, noncarcinogen (unitless) |
|---|---|
| **7.3E-08** | **9.9E-04** |

**MESSAGE SUMMARY BELOW:**

**END**

USEPA SG-SCREEN
Version 2.0, 04/2003

DTSC Modification
December 2014

# Department of Toxic Substances Control
# Vapor Intrusion Screening Model - Soil Gas

DATA ENTRY SHEET

**Scenario:** Residential
**Chemical:** Tetrachloroethylene

**Results Summary**

| Soil Gas Conc. ($\mu g/m^3$) | Attenuation Factor (unitless) | Indoor Air Conc. ($\mu g/m^3$) | Cancer Risk | Noncancer Hazard |
|---|---|---|---|---|
| 1.20E+03 | 1.8E-04 | 2.2E-01 | 4.5E-07 | 5.9E-03 |

Reset to Defaults

Soil Gas Concentration Data

| ENTER Chemical CAS No. (numbers only, no dashes) | ENTER Soil gas conc., $C_g$ ($\mu g/m^3$) | OR | ENTER Soil gas conc., $C_g$ (ppmv) | Chemical |
|---|---|---|---|---|
| 127184 | 1.20E+03 | | | Tetrachloroethylene |

MORE ↓

| ENTER Depth below grade to bottom of enclosed space floor, $L_F$ (15 or 200 cm) | ENTER Soil gas sampling depth below grade, $L_s$ (cm) | ENTER Average soil temperature, $T_S$ ($^oC$) | ENTER Vadose zone SCS soil type (used to estimate soil vapor permeability) | OR | ENTER User-defined vadose zone soil vapor permeability, $k_v$ ($cm^2$) |
|---|---|---|---|---|---|
| 15 | 457 | 24 | SIL | | |

MORE ↓

| ENTER Vandose zone SCS soil type (Lookup Soil Parameters) | ENTER Vadose zone soil dry bulk density, $\rho_b^A$ ($g/cm^3$) | ENTER Vadose zone soil total porosity, $n^V$ (unitless) | ENTER Vadose zone soil water-filled porosity, $\theta_w^V$ ($cm^3/cm^3$) | ENTER Average vapor flow rate into bldg. (Leave blank to calculate) $Q_{soil}$ (L/m) |
|---|---|---|---|---|
| SIL | 1.49 | 0.439 | 0.18 | 5 |

MORE ↓

Lookup Receptor Parameters

| | ENTER Averaging time for carcinogens, $AT_C$ (yrs) | ENTER Averaging time for noncarcinogens, $AT_{NC}$ (yrs) | ENTER Exposure duration, ED (yrs) | ENTER Exposure frequency, EF (days/yr) | ENTER Exposure Time ET (hrs/day) | ENTER Air Exchange Rate ACH $(hour)^{-1}$ |
|---|---|---|---|---|---|---|
| NEW=> Residential | 70 | 26 | 26 | 350 | 24 (NEW) | 0.5 (NEW) |

END

## Tetrachloroethylene

| Diffusivity in air, $D_a$ ($cm^2/s$) | Diffusivity in water, $D_w$ ($cm^2/s$) | Henry's law constant at reference temperature, H (atm-$m^3$/mol) | Henry's law constant reference temperature, $T_R$ ($^oC$) | Enthalpy of vaporization at the normal boiling point, $\Delta H_{v,b}$ (cal/mol) | Normal boiling point, $T_B$ ($^oK$) | Critical temperature, $T_C$ ($^oK$) | Unit risk factor, URF ($\mu g/m^3)^{-1}$ | Reference conc., RfC ($mg/m^3$) | Molecular weight, MW (g/mol) |
|---|---|---|---|---|---|---|---|---|---|
| 5.05E-02 | 9.46E-06 | 1.77E-02 | 25 | 8,288 | 394.40 | 620.20 | 5.9E-06 | 3.5E-02 | 165.83 |

**END**

**Scenario:** **Residential**

**Chemical:** **Tetrachloroethylene**

| Source-building separation, $L_T$ (cm) | Vadose zone soil air-filled porosity, $\theta_a^V$ ($cm^3/cm^3$) | Vadose zone effective total fluid saturation, $S_{te}$ ($cm^3/cm^3$) | Vadose zone soil intrinsic permeability, $k_i$ ($cm^2$) | Vadose zone soil relative air permeability, $k_{rg}$ ($cm^2$) | Vadose zone soil effective vapor permeability, $k_v$ ($cm^2$) | Floor-wall seam perimeter, $X_{crack}$ (cm) | Soil gas conc. ($\mu g/m^3$) | Bldg. ventilation rate, $Q_{building}$ ($cm^3/s$) |
|---|---|---|---|---|---|---|---|---|
| 442 | 0.259 | 0.307 | 2.89E-09 | 0.798 | 2.30E-09 | 4,000 | 1.20E+03 | 3.39E+04 |

| Area of enclosed space below grade, $A_B$ ($cm^2$) | Crack-to-total area ratio, $\eta$ (unitless) | Crack depth below grade, $Z_{crack}$ (cm) | Enthalpy of vaporization at ave. soil temperature, $\Delta H_{v,TS}$ (cal/mol) | Henry's law constant at ave. soil temperature, $H_{TS}$ (atm-$m^3$/mol) | Henry's law constant at ave. soil temperature, $H'_{TS}$ (unitless) | Vapor viscosity at ave. soil temperature, $\mu_{TS}$ (g/cm-s) | Vadose zone effective diffusion coefficient, $D^{eff}_V$ ($cm^2/s$) | Diffusion path length, $L_d$ (cm) |
|---|---|---|---|---|---|---|---|---|
| 1.00E+06 | 5.00E-03 | 15 | 9,410 | 1.68E-02 | 6.88E-01 | 1.80E-04 | 2.91E-03 | 442 |

| Convection path length, $L_p$ (cm) | Source vapor conc., $C_{source}$ ($\mu g/m^3$) | Crack radius, $r_{crack}$ (cm) | Average vapor flow rate into bldg., $Q_{soil}$ ($cm^3/s$) | Crack effective diffusion coefficient, $D^{crack}$ ($cm^2/s$) | Area of crack, $A_{crack}$ ($cm^2$) | Exponent of equivalent foundation Peclet number, $exp(Pe^f)$ (unitless) | Infinite source indoor attenuation coefficient, $\alpha$ (unitless) | Infinite source bldg. conc., $C_{building}$ ($\mu g/m^3$) |
|---|---|---|---|---|---|---|---|---|
| 15 | 1.20E+03 | 1.25 | 8.33E+01 | 2.91E-03 | 5.00E+03 | 7.00E+24 | **1.80E-04** | 2.16E-01 |

| Unit risk factor, URF $(\mu g/m^3)^{-1}$ | Reference conc., RfC ($mg/m^3$) |
|---|---|
| 5.9E-06 | 3.5E-02 |

**END**

**Scenario:** **Residential**
**Chemical:** **Tetrachloroethylene**

INCREMENTAL RISK CALCULATIONS:

| Incremental risk from vapor intrusion to indoor air, carcinogen (unitless) | Hazard quotient from vapor intrusion to indoor air, noncarcinogen (unitless) |
|---|---|
| **4.5E-07** | **5.9E-03** |

**MESSAGE SUMMARY BELOW:**

**END**

USEPA SG-SCREEN
Version 2.0, 04/2003

DTSC Modification
December 2014

# Department of Toxic Substances Control
# Vapor Intrusion Screening Model - Soil Gas

DATA ENTRY SHEET

**Scenario:** Commercial
**Chemical:** Tetrachloroethylene

**Results Summary**

| Soil Gas Conc. ($\mu g/m^3$) | Attenuation Factor (unitless) | Indoor Air Conc. ($\mu g/m^3$) | Cancer Risk | Noncancer Hazard |
|---|---|---|---|---|
| 1.20E+03 | 9.0E-05 | 1.1E-01 | 5.2E-08 | 7.1E-04 |

Reset to Defaults

Soil Gas Concentration Data

| ENTER Chemical CAS No. (numbers only, no dashes) | ENTER Soil gas conc., $C_g$ ($\mu g/m^3$) | OR | ENTER Soil gas conc., $C_g$ (ppmv) | Chemical |
|---|---|---|---|---|
| 127184 | 1.20E+03 | | | Tetrachloroethylene |

MORE ↓

| ENTER Depth below grade to bottom of enclosed space floor, $L_F$ (15 or 200 cm) | ENTER Soil gas sampling depth below grade, $L_s$ (cm) | ENTER Average soil temperature, $T_S$ ($^oC$) | ENTER Vadose zone SCS soil type (used to estimate soil vapor permeability) | OR | ENTER User-defined vadose zone soil vapor permeability, $k_v$ ($cm^2$) |
|---|---|---|---|---|---|
| 15 | 457 | 24 | SIL | | |

MORE ↓

| ENTER Vandose zone SCS soil type (Lookup Soil Parameters) | ENTER Vadose zone soil dry bulk density, $\rho_b^A$ ($g/cm^3$) | ENTER Vadose zone soil total porosity, $n^V$ (unitless) | ENTER Vadose zone soil water-filled porosity, $\theta_w^V$ ($cm^3/cm^3$) | ENTER Average vapor flow rate into bldg. (Leave blank to calculate) $Q_{soil}$ (L/m) |
|---|---|---|---|---|
| SIL | 1.49 | 0.439 | 0.18 | 5 |

MORE ↓

Lookup Receptor Parameters

| | ENTER Averaging time for carcinogens, $AT_C$ (yrs) | ENTER Averaging time for noncarcinogens, $AT_{NC}$ (yrs) | ENTER Exposure duration, ED (yrs) | ENTER Exposure frequency, EF (days/yr) | ENTER Exposure Time ET (hrs/day) | ENTER Air Exchange Rate ACH $(hour)^{-1}$ |
|---|---|---|---|---|---|---|
| NEW=> Commercial | 70 | 25 | 25 | 250 | 8 | 1 |
| | | | | | (NEW) | (NEW) |

END

## Tetrachloroethylene

| Diffusivity in air, $D_a$ ($cm^2/s$) | Diffusivity in water, $D_w$ ($cm^2/s$) | Henry's law constant at reference temperature, H (atm-$m^3$/mol) | Henry's law constant reference temperature, $T_R$ ($^oC$) | Enthalpy of vaporization at the normal boiling point, $\Delta H_{v,b}$ (cal/mol) | Normal boiling point, $T_B$ ($^oK$) | Critical temperature, $T_C$ ($^oK$) | Unit risk factor, URF ($\mu g/m^3)^{-1}$ | Reference conc., RfC ($mg/m^3$) | Molecular weight, MW (g/mol) |
|---|---|---|---|---|---|---|---|---|---|
| 5.05E-02 | 9.46E-06 | 1.77E-02 | 25 | 8,288 | 394.40 | 620.20 | 5.9E-06 | 3.5E-02 | 165.83 |

**END**

**Scenario:** **Commercial**

**Chemical:** **Tetrachloroethylene**

| Source-building separation, $L_T$ (cm) | Vadose zone soil air-filled porosity, $\theta_a^V$ ($cm^3/cm^3$) | Vadose zone effective total fluid saturation, $S_{te}$ ($cm^3/cm^3$) | Vadose zone soil intrinsic permeability, $k_i$ ($cm^2$) | Vadose zone soil relative air permeability, $k_{rg}$ ($cm^2$) | Vadose zone soil effective vapor permeability, $k_v$ ($cm^2$) | Floor-wall seam perimeter, $X_{crack}$ (cm) | Soil gas conc. ($\mu g/m^3$) | Bldg. ventilation rate, $Q_{building}$ ($cm^3/s$) |
|---|---|---|---|---|---|---|---|---|
| 442 | 0.259 | 0.307 | 2.89E-09 | 0.798 | 2.30E-09 | 4,000 | 1.20E+03 | 6.78E+04 |

| Area of enclosed space below grade, $A_B$ ($cm^2$) | Crack-to-total area ratio, $\eta$ (unitless) | Crack depth below grade, $Z_{crack}$ (cm) | Enthalpy of vaporization at ave. soil temperature, $\Delta H_{v,TS}$ (cal/mol) | Henry's law constant at ave. soil temperature, $H_{TS}$ (atm-$m^3$/mol) | Henry's law constant at ave. soil temperature, $H'_{TS}$ (unitless) | Vapor viscosity at ave. soil temperature, $\mu_{TS}$ (g/cm-s) | Vadose zone effective diffusion coefficient, $D^{eff}_V$ ($cm^2/s$) | Diffusion path length, $L_d$ (cm) |
|---|---|---|---|---|---|---|---|---|
| 1.00E+06 | 5.00E-03 | 15 | 9,410 | 1.68E-02 | 6.88E-01 | 1.80E-04 | 2.91E-03 | 442 |

| Convection path length, $L_p$ (cm) | Source vapor conc., $C_{source}$ ($\mu g/m^3$) | Crack radius, $r_{crack}$ (cm) | Average vapor flow rate into bldg., $Q_{soil}$ ($cm^3/s$) | Crack effective diffusion coefficient, $D^{crack}$ ($cm^2/s$) | Area of crack, $A_{crack}$ ($cm^2$) | Exponent of equivalent foundation Peclet number, $exp(Pe^f)$ (unitless) | Infinite source indoor attenuation coefficient, $\alpha$ (unitless) | Infinite source bldg. conc., $C_{building}$ ($\mu g/m^3$) |
|---|---|---|---|---|---|---|---|---|
| 15 | 1.20E+03 | 1.25 | 8.33E+01 | 2.91E-03 | 5.00E+03 | 7.00E+24 | **9.01E-05** | 1.08E-01 |

| Unit risk factor, URF $(\mu g/m^3)^{-1}$ | Reference conc., RfC ($mg/m^3$) |
|---|---|
| 5.9E-06 | 3.5E-02 |

**END**

**Scenario:** **Commercial**
**Chemical:** **Tetrachloroethylene**

INCREMENTAL RISK CALCULATIONS:

| Incremental risk from vapor intrusion to indoor air, carcinogen (unitless) | Hazard quotient from vapor intrusion to indoor air, noncarcinogen (unitless) |
|---|---|
| **5.2E-08** | **7.1E-04** |

**MESSAGE SUMMARY BELOW:**

**END**

USEPA SG-SCREEN
Version 2.0, 04/2003

DTSC Modification
December 2014

# Department of Toxic Substances Control
# Vapor Intrusion Screening Model - Soil Gas

DATA ENTRY SHEET

**Scenario:** Residential
**Chemical:** Tetrachloroethylene

**Results Summary**

| Soil Gas Conc. ($\mu g/m^3$) | Attenuation Factor (unitless) | Indoor Air Conc. ($\mu g/m^3$) | Cancer Risk | Noncancer Hazard |
|---|---|---|---|---|
| 1.60E+03 | 9.2E-05 | 1.5E-01 | 3.1E-07 | 4.0E-03 |

Reset to Defaults

Soil Gas Concentration Data

| ENTER Chemical CAS No. (numbers only, no dashes) | ENTER Soil gas conc., $C_g$ ($\mu g/m^3$) | OR | ENTER Soil gas conc., $C_g$ (ppmv) | Chemical |
|---|---|---|---|---|
| 127184 | 1.60E+03 | | | Tetrachloroethylene |

MORE ↓

| ENTER Depth below grade to bottom of enclosed space floor, $L_F$ (15 or 200 cm) | ENTER Soil gas sampling depth below grade, $L_s$ (cm) | ENTER Average soil temperature, $T_S$ (°C) | ENTER Vadose zone SCS soil type (used to estimate soil vapor permeability) | OR | ENTER User-defined vadose zone soil vapor permeability, $k_v$ ($cm^2$) |
|---|---|---|---|---|---|
| 15 | 914 | 24 | SIL | | |

MORE ↓

| ENTER Vandose zone SCS soil type (Lookup Soil Parameters) | ENTER Vadose zone soil dry bulk density, $\rho_b^A$ ($g/cm^3$) | ENTER Vadose zone soil total porosity, $n^V$ (unitless) | ENTER Vadose zone soil water-filled porosity, $\theta_w^V$ ($cm^3/cm^3$) | ENTER Average vapor flow rate into bldg. (Leave blank to calculate) $Q_{soil}$ (L/m) |
|---|---|---|---|---|
| SIL | 1.49 | 0.439 | 0.18 | 5 |

MORE ↓

Lookup Receptor Parameters

| | ENTER Averaging time for carcinogens, $AT_C$ (yrs) | ENTER Averaging time for noncarcinogens, $AT_{NC}$ (yrs) | ENTER Exposure duration, ED (yrs) | ENTER Exposure frequency, EF (days/yr) | ENTER Exposure Time ET (hrs/day) | ENTER Air Exchange Rate ACH $(hour)^{-1}$ |
|---|---|---|---|---|---|---|
| NEW=> Residential | 70 | 26 | 26 | 350 | 24 | 0.5 |
| | | | | | (NEW) | (NEW) |

END

## Tetrachloroethylene

| Diffusivity in air, $D_a$ ($cm^2/s$) | Diffusivity in water, $D_w$ ($cm^2/s$) | Henry's law constant at reference temperature, H (atm-$m^3$/mol) | Henry's law constant reference temperature, $T_R$ ($^oC$) | Enthalpy of vaporization at the normal boiling point, $\Delta H_{v,b}$ (cal/mol) | Normal boiling point, $T_B$ ($^oK$) | Critical temperature, $T_C$ ($^oK$) | Unit risk factor, URF ($\mu g/m^3)^{-1}$ | Reference conc., RfC ($mg/m^3$) | Molecular weight, MW (g/mol) |
|---|---|---|---|---|---|---|---|---|---|
| 5.05E-02 | 9.46E-06 | 1.77E-02 | 25 | 8,288 | 394.40 | 620.20 | 5.9E-06 | 3.5E-02 | 165.83 |

**END**

**Scenario:** **Residential**

**Chemical:** **Tetrachloroethylene**

| Source-building separation, $L_T$ (cm) | Vadose zone soil air-filled porosity, $\theta_a^V$ ($cm^3/cm^3$) | Vadose zone effective total fluid saturation, $S_{te}$ ($cm^3/cm^3$) | Vadose zone soil intrinsic permeability, $k_i$ ($cm^2$) | Vadose zone soil relative air permeability, $k_{rg}$ ($cm^2$) | Vadose zone soil effective vapor permeability, $k_v$ ($cm^2$) | Floor-wall seam perimeter, $X_{crack}$ (cm) | Soil gas conc. ($\mu g/m^3$) | Bldg. ventilation rate, $Q_{building}$ ($cm^3/s$) |
|---|---|---|---|---|---|---|---|---|
| 899 | 0.259 | 0.307 | 2.89E-09 | 0.798 | 2.30E-09 | 4,000 | 1.60E+03 | 3.39E+04 |

| Area of enclosed space below grade, $A_B$ ($cm^2$) | Crack-to-total area ratio, $\eta$ (unitless) | Crack depth below grade, $Z_{crack}$ (cm) | Enthalpy of vaporization at ave. soil temperature, $\Delta H_{v,TS}$ (cal/mol) | Henry's law constant at ave. soil temperature, $H_{TS}$ (atm-$m^3$/mol) | Henry's law constant at ave. soil temperature, $H'_{TS}$ (unitless) | Vapor viscosity at ave. soil temperature, $\mu_{TS}$ (g/cm-s) | Vadose zone effective diffusion coefficient, $D^{eff}_V$ ($cm^2/s$) | Diffusion path length, $L_d$ (cm) |
|---|---|---|---|---|---|---|---|---|
| 1.00E+06 | 5.00E-03 | 15 | 9,410 | 1.68E-02 | 6.88E-01 | 1.80E-04 | 2.91E-03 | 899 |

| Convection path length, $L_p$ (cm) | Source vapor conc., $C_{source}$ ($\mu g/m^3$) | Crack radius, $r_{crack}$ (cm) | Average vapor flow rate into bldg., $Q_{soil}$ ($cm^3/s$) | Crack effective diffusion coefficient, $D^{crack}$ ($cm^2/s$) | Area of crack, $A_{crack}$ ($cm^2$) | Exponent of equivalent foundation Peclet number, $exp(Pe^f)$ (unitless) | Infinite source indoor attenuation coefficient, $\alpha$ (unitless) | Infinite source bldg. conc., $C_{building}$ ($\mu g/m^3$) |
|---|---|---|---|---|---|---|---|---|
| 15 | 1.60E+03 | 1.25 | 8.33E+01 | 2.91E-03 | 5.00E+03 | 7.00E+24 | **9.20E-05** | 1.47E-01 |

| Unit risk factor, URF $(\mu g/m^3)^{-1}$ | Reference conc., RfC ($mg/m^3$) |
|---|---|
| 5.9E-06 | 3.5E-02 |

**END**

**Scenario:** **Residential**
**Chemical:** **Tetrachloroethylene**

INCREMENTAL RISK CALCULATIONS:

| Incremental risk from vapor intrusion to indoor air, carcinogen (unitless) | Hazard quotient from vapor intrusion to indoor air, noncarcinogen (unitless) |
|---|---|
| **3.1E-07** | **4.0E-03** |

**MESSAGE SUMMARY BELOW:**

**END**

USEPA SG-SCREEN
Version 2.0, 04/2003

DTSC Modification
December 2014

# Department of Toxic Substances Control
# Vapor Intrusion Screening Model - Soil Gas

DATA ENTRY SHEET

**Scenario:** Commercial
**Chemical:** Tetrachloroethylene

## Results Summary

| Soil Gas Conc. ($\mu g/m^3$) | Attenuation Factor (unitless) | Indoor Air Conc. ($\mu g/m^3$) | Cancer Risk | Noncancer Hazard |
|---|---|---|---|---|
| 1.60E+03 | 4.6E-05 | 7.4E-02 | 3.5E-08 | 4.8E-04 |

MESSAGE: Attenuation factor < 6E-05 is unreasonably low.

Reset to Defaults

Soil Gas Concentration Data

| ENTER Chemical CAS No. (numbers only, no dashes) | ENTER Soil gas conc., $C_g$ ($\mu g/m^3$) | OR | ENTER Soil gas conc., $C_g$ (ppmv) | Chemical |
|---|---|---|---|---|
| 127184 | 1.60E+03 | | | Tetrachloroethylene |

MORE ↓

| ENTER Depth below grade to bottom of enclosed space floor, $L_F$ (15 or 200 cm) | ENTER Soil gas sampling depth below grade, $L_s$ (cm) | ENTER Average soil temperature, $T_S$ ($^oC$) | ENTER Vadose zone SCS soil type (used to estimate soil vapor permeability) | OR | ENTER User-defined vadose zone soil vapor permeability, $k_v$ ($cm^2$) |
|---|---|---|---|---|---|
| 15 | 914 | 24 | SIL | | |

MORE ↓

| ENTER Vandose zone SCS soil type (Lookup Soil Parameters) | ENTER Vadose zone soil dry bulk density, $\rho_b^A$ ($g/cm^3$) | ENTER Vadose zone soil total porosity, $n^V$ (unitless) | ENTER Vadose zone soil water-filled porosity, $\theta_w^V$ ($cm^3/cm^3$) | ENTER Average vapor flow rate into bldg. (Leave blank to calculate) $Q_{soil}$ (L/m) |
|---|---|---|---|---|
| SIL | 1.49 | 0.439 | 0.18 | 5 |

MORE ↓

Lookup Receptor Parameters

| | ENTER Averaging time for carcinogens, $AT_C$ (yrs) | ENTER Averaging time for noncarcinogens, $AT_{NC}$ (yrs) | ENTER Exposure duration, ED (yrs) | ENTER Exposure frequency, EF (days/yr) | ENTER Exposure Time ET (hrs/day) | ENTER Air Exchange Rate ACH $(hour)^{-1}$ |
|---|---|---|---|---|---|---|
| NEW=> Commercial | 70 | 25 | 25 | 250 | 8 | 1 |
| | | | | | (NEW) | (NEW) |

END

## Tetrachloroethylene

| Diffusivity in air, $D_a$ ($cm^2/s$) | Diffusivity in water, $D_w$ ($cm^2/s$) | Henry's law constant at reference temperature, H (atm-$m^3$/mol) | Henry's law constant reference temperature, $T_R$ ($^oC$) | Enthalpy of vaporization at the normal boiling point, $\Delta H_{v,b}$ (cal/mol) | Normal boiling point, $T_B$ ($^oK$) | Critical temperature, $T_C$ ($^oK$) | Unit risk factor, URF ($\mu g/m^3)^{-1}$ | Reference conc., RfC ($mg/m^3$) | Molecular weight, MW (g/mol) |
|---|---|---|---|---|---|---|---|---|---|
| 5.05E-02 | 9.46E-06 | 1.77E-02 | 25 | 8,288 | 394.40 | 620.20 | 5.9E-06 | 3.5E-02 | 165.83 |

**END**

**Scenario:** **Commercial**

**Chemical:** **Tetrachloroethylene**

| Source-building separation, $L_T$ (cm) | Vadose zone soil air-filled porosity, $\theta_a^V$ ($cm^3/cm^3$) | Vadose zone effective total fluid saturation, $S_{te}$ ($cm^3/cm^3$) | Vadose zone soil intrinsic permeability, $k_i$ ($cm^2$) | Vadose zone soil relative air permeability, $k_{rg}$ ($cm^2$) | Vadose zone soil effective vapor permeability, $k_v$ ($cm^2$) | Floor-wall seam perimeter, $X_{crack}$ (cm) | Soil gas conc. ($\mu g/m^3$) | Bldg. ventilation rate, $Q_{building}$ ($cm^3/s$) |
|---|---|---|---|---|---|---|---|---|
| 899 | 0.259 | 0.307 | 2.89E-09 | 0.798 | 2.30E-09 | 4,000 | 1.60E+03 | 6.78E+04 |

| Area of enclosed space below grade, $A_B$ ($cm^2$) | Crack-to-total area ratio, $\eta$ (unitless) | Crack depth below grade, $Z_{crack}$ (cm) | Enthalpy of vaporization at ave. soil temperature, $\Delta H_{v,TS}$ (cal/mol) | Henry's law constant at ave. soil temperature, $H_{TS}$ (atm-$m^3$/mol) | Henry's law constant at ave. soil temperature, $H'_{TS}$ (unitless) | Vapor viscosity at ave. soil temperature, $\mu_{TS}$ (g/cm-s) | Vadose zone effective diffusion coefficient, $D^{eff}_V$ ($cm^2/s$) | Diffusion path length, $L_d$ (cm) |
|---|---|---|---|---|---|---|---|---|
| 1.00E+06 | 5.00E-03 | 15 | 9,410 | 1.68E-02 | 6.88E-01 | 1.80E-04 | 2.91E-03 | 899 |

| Convection path length, $L_p$ (cm) | Source vapor conc., $C_{source}$ ($\mu g/m^3$) | Crack radius, $r_{crack}$ (cm) | Average vapor flow rate into bldg., $Q_{soil}$ ($cm^3/s$) | Crack effective diffusion coefficient, $D^{crack}$ ($cm^2/s$) | Area of crack, $A_{crack}$ ($cm^2$) | Exponent of equivalent foundation Peclet number, $exp(Pe^f)$ (unitless) | Infinite source indoor attenuation coefficient, $\alpha$ (unitless) | Infinite source bldg. conc., $C_{building}$ ($\mu g/m^3$) |
|---|---|---|---|---|---|---|---|---|
| 15 | 1.60E+03 | 1.25 | 8.33E+01 | 2.91E-03 | 5.00E+03 | 7.00E+24 | **4.60E-05** | 7.36E-02 |

**Warning: alpha < 6E-05 is unreasonably low.**

| Unit risk factor, URF $(\mu g/m^3)^{-1}$ | Reference conc., RfC ($mg/m^3$) |
|---|---|
| 5.9E-06 | 3.5E-02 |

**END**

**Scenario:** **Commercial**
**Chemical:** **Tetrachloroethylene**

INCREMENTAL RISK CALCULATIONS:

| Incremental risk from vapor intrusion to indoor air, carcinogen (unitless) | Hazard quotient from vapor intrusion to indoor air, noncarcinogen (unitless) |
|---|---|
| **3.5E-08** | **4.8E-04** |

**MESSAGE SUMMARY BELOW:**

**END** MESSAGE: Attenuation factor < 6E-05 is unreasonably low.

USEPA SG-SCREEN
Version 2.0, 04/2003

DTSC Modification
December 2014

# Department of Toxic Substances Control
# Vapor Intrusion Screening Model - Soil Gas

DATA ENTRY SHEET

**Scenario:** Residential
**Chemical:** Tetrachloroethylene

**Results Summary**

| Soil Gas Conc. ($\mu g/m^3$) | Attenuation Factor (unitless) | Indoor Air Conc. ($\mu g/m^3$) | Cancer Risk | Noncancer Hazard |
|---|---|---|---|---|
| 5.50E+02 | 5.0E-04 | 2.7E-01 | 5.8E-07 | 7.5E-03 |

Reset to Defaults

Soil Gas Concentration Data

| ENTER Chemical CAS No. (numbers only, no dashes) | ENTER Soil gas conc., $C_g$ ($\mu g/m^3$) | OR | ENTER Soil gas conc., $C_g$ (ppmv) | Chemical |
|---|---|---|---|---|
| 127184 | 5.50E+02 | | | Tetrachloroethylene |

MORE ↓

| ENTER Depth below grade to bottom of enclosed space floor, $L_F$ (15 or 200 cm) | ENTER Soil gas sampling depth below grade, $L_s$ (cm) | ENTER Average soil temperature, $T_S$ ($^oC$) | ENTER Vadose zone SCS soil type (used to estimate soil vapor permeability) | OR | ENTER User-defined vadose zone soil vapor permeability, $k_v$ ($cm^2$) |
|---|---|---|---|---|---|
| 15 | 152 | 24 | SIL | | |

MORE ↓

| ENTER Vandose zone SCS soil type (Lookup Soil Parameters) | ENTER Vadose zone soil dry bulk density, $\rho_b^A$ ($g/cm^3$) | ENTER Vadose zone soil total porosity, $n^V$ (unitless) | ENTER Vadose zone soil water-filled porosity, $\theta_w^V$ ($cm^3/cm^3$) | ENTER Average vapor flow rate into bldg. (Leave blank to calculate) $Q_{soil}$ (L/m) |
|---|---|---|---|---|
| SIL | 1.49 | 0.439 | 0.18 | 5 |

MORE ↓

Lookup Receptor Parameters

| | ENTER Averaging time for carcinogens, $AT_C$ (yrs) | ENTER Averaging time for noncarcinogens, $AT_{NC}$ (yrs) | ENTER Exposure duration, ED (yrs) | ENTER Exposure frequency, EF (days/yr) | ENTER Exposure Time ET (hrs/day) | ENTER Air Exchange Rate ACH $(hour)^{-1}$ |
|---|---|---|---|---|---|---|
| NEW=> Residential | 70 | 26 | 26 | 350 | 24 (NEW) | 0.5 (NEW) |

END

## Tetrachloroethylene

| Diffusivity in air, $D_a$ ($cm^2/s$) | Diffusivity in water, $D_w$ ($cm^2/s$) | Henry's law constant at reference temperature, H (atm-$m^3$/mol) | Henry's law constant reference temperature, $T_R$ ($^oC$) | Enthalpy of vaporization at the normal boiling point, $\Delta H_{v,b}$ (cal/mol) | Normal boiling point, $T_B$ ($^oK$) | Critical temperature, $T_C$ ($^oK$) | Unit risk factor, URF ($\mu g/m^3)^{-1}$ | Reference conc., RfC ($mg/m^3$) | Molecular weight, MW (g/mol) |
|---|---|---|---|---|---|---|---|---|---|
| 5.05E-02 | 9.46E-06 | 1.77E-02 | 25 | 8,288 | 394.40 | 620.20 | 5.9E-06 | 3.5E-02 | 165.83 |

**END**

**Scenario:** **Residential**

**Chemical:** **Tetrachloroethylene**

| Source-building separation, $L_T$ (cm) | Vadose zone soil air-filled porosity, $\theta_a^V$ ($cm^3/cm^3$) | Vadose zone effective total fluid saturation, $S_{te}$ ($cm^3/cm^3$) | Vadose zone soil intrinsic permeability, $k_i$ ($cm^2$) | Vadose zone soil relative air permeability, $k_{rg}$ ($cm^2$) | Vadose zone soil effective vapor permeability, $k_v$ ($cm^2$) | Floor-wall seam perimeter, $X_{crack}$ (cm) | Soil gas conc. ($\mu g/m^3$) | Bldg. ventilation rate, $Q_{building}$ ($cm^3/s$) |
|---|---|---|---|---|---|---|---|---|
| 137 | 0.259 | 0.307 | 2.89E-09 | 0.798 | 2.30E-09 | 4,000 | 5.50E+02 | 3.39E+04 |

| Area of enclosed space below grade, $A_B$ ($cm^2$) | Crack-to-total area ratio, $\eta$ (unitless) | Crack depth below grade, $Z_{crack}$ (cm) | Enthalpy of vaporization at ave. soil temperature, $\Delta H_{v,TS}$ (cal/mol) | Henry's law constant at ave. soil temperature, $H_{TS}$ (atm-$m^3$/mol) | Henry's law constant at ave. soil temperature, $H'_{TS}$ (unitless) | Vapor viscosity at ave. soil temperature, $\mu_{TS}$ (g/cm-s) | Vadose zone effective diffusion coefficient, $D^{eff}_V$ ($cm^2/s$) | Diffusion path length, $L_d$ (cm) |
|---|---|---|---|---|---|---|---|---|
| 1.00E+06 | 5.00E-03 | 15 | 9,410 | 1.68E-02 | 6.88E-01 | 1.80E-04 | 2.91E-03 | 137 |

| Convection path length, $L_p$ (cm) | Source vapor conc., $C_{source}$ ($\mu g/m^3$) | Crack radius, $r_{crack}$ (cm) | Average vapor flow rate into bldg., $Q_{soil}$ ($cm^3/s$) | Crack effective diffusion coefficient, $D^{crack}$ ($cm^2/s$) | Area of crack, $A_{crack}$ ($cm^2$) | Exponent of equivalent foundation Peclet number, $exp(Pe^f)$ (unitless) | Infinite source indoor attenuation coefficient, $\alpha$ (unitless) | Infinite source bldg. conc., $C_{building}$ ($\mu g/m^3$) |
|---|---|---|---|---|---|---|---|---|
| 15 | 5.50E+02 | 1.25 | 8.33E+01 | 2.91E-03 | 5.00E+03 | 7.00E+24 | **5.00E-04** | 2.75E-01 |

| Unit risk factor, URF $(\mu g/m^3)^{-1}$ | Reference conc., RfC ($mg/m^3$) |
|---|---|
| 5.9E-06 | 3.5E-02 |

**END**

**Scenario:** **Residential**
**Chemical:** **Tetrachloroethylene**

INCREMENTAL RISK CALCULATIONS:

| Incremental risk from vapor intrusion to indoor air, carcinogen (unitless) | Hazard quotient from vapor intrusion to indoor air, noncarcinogen (unitless) |
|---|---|
| **5.8E-07** | **7.5E-03** |

**MESSAGE SUMMARY BELOW:**

**END**

USEPA SG-SCREEN
Version 2.0, 04/2003

DTSC Modification
December 2014

# Department of Toxic Substances Control
# Vapor Intrusion Screening Model - Soil Gas

DATA ENTRY SHEET

**Scenario:** Commercial
**Chemical:** Tetrachloroethylene

**Results Summary**

| Soil Gas Conc. ($\mu g/m^3$) | Attenuation Factor (unitless) | Indoor Air Conc. ($\mu g/m^3$) | Cancer Risk | Noncancer Hazard |
|---|---|---|---|---|
| 5.50E+02 | 2.5E-04 | 1.4E-01 | 6.6E-08 | 9.0E-04 |

Reset to Defaults

Soil Gas Concentration Data

| ENTER Chemical CAS No. (numbers only, no dashes) | ENTER Soil gas conc., $C_g$ ($\mu g/m^3$) | OR | ENTER Soil gas conc., $C_g$ (ppmv) | Chemical |
|---|---|---|---|---|
| 127184 | 5.50E+02 | | | Tetrachloroethylene |

MORE ↓

| ENTER Depth below grade to bottom of enclosed space floor, $L_F$ (15 or 200 cm) | ENTER Soil gas sampling depth below grade, $L_s$ (cm) | ENTER Average soil temperature, $T_S$ ($^oC$) | ENTER Vadose zone SCS soil type (used to estimate soil vapor permeability) | OR | ENTER User-defined vadose zone soil vapor permeability, $k_v$ ($cm^2$) |
|---|---|---|---|---|---|
| 15 | 152 | 24 | SIL | | |

MORE ↓

| ENTER Vandose zone SCS soil type (Lookup Soil Parameters) | ENTER Vadose zone soil dry bulk density, $\rho_b^A$ ($g/cm^3$) | ENTER Vadose zone soil total porosity, $n^V$ (unitless) | ENTER Vadose zone soil water-filled porosity, $\theta_w^V$ ($cm^3/cm^3$) | ENTER Average vapor flow rate into bldg. (Leave blank to calculate) $Q_{soil}$ (L/m) |
|---|---|---|---|---|
| SIL | 1.49 | 0.439 | 0.18 | 5 |

MORE ↓

Lookup Receptor Parameters

| | ENTER Averaging time for carcinogens, $AT_C$ (yrs) | ENTER Averaging time for noncarcinogens, $AT_{NC}$ (yrs) | ENTER Exposure duration, ED (yrs) | ENTER Exposure frequency, EF (days/yr) | ENTER Exposure Time ET (hrs/day) | ENTER Air Exchange Rate ACH $(hour)^{-1}$ |
|---|---|---|---|---|---|---|
| NEW=> Commercial | 70 | 25 | 25 | 250 | 8 | 1 |
| | | | | | (NEW) | (NEW) |

END

## Tetrachloroethylene

| Diffusivity in air, $D_a$ ($cm^2/s$) | Diffusivity in water, $D_w$ ($cm^2/s$) | Henry's law constant at reference temperature, H (atm-$m^3$/mol) | Henry's law constant reference temperature, $T_R$ ($^oC$) | Enthalpy of vaporization at the normal boiling point, $\Delta H_{v,b}$ (cal/mol) | Normal boiling point, $T_B$ ($^oK$) | Critical temperature, $T_C$ ($^oK$) | Unit risk factor, URF ($\mu g/m^3)^{-1}$ | Reference conc., RfC ($mg/m^3$) | Molecular weight, MW (g/mol) |
|---|---|---|---|---|---|---|---|---|---|
| 5.05E-02 | 9.46E-06 | 1.77E-02 | 25 | 8,288 | 394.40 | 620.20 | 5.9E-06 | 3.5E-02 | 165.83 |

**END**

**Scenario:** **Commercial**

**Chemical:** **Tetrachloroethylene**

| Source-building separation, $L_T$ (cm) | Vadose zone soil air-filled porosity, $\theta_a^V$ ($cm^3/cm^3$) | Vadose zone effective total fluid saturation, $S_{te}$ ($cm^3/cm^3$) | Vadose zone soil intrinsic permeability, $k_i$ ($cm^2$) | Vadose zone soil relative air permeability, $k_{rg}$ ($cm^2$) | Vadose zone soil effective vapor permeability, $k_v$ ($cm^2$) | Floor-wall seam perimeter, $X_{crack}$ (cm) | Soil gas conc. ($\mu g/m^3$) | Bldg. ventilation rate, $Q_{building}$ ($cm^3/s$) |
|---|---|---|---|---|---|---|---|---|
| 137 | 0.259 | 0.307 | 2.89E-09 | 0.798 | 2.30E-09 | 4,000 | 5.50E+02 | 6.78E+04 |

| Area of enclosed space below grade, $A_B$ ($cm^2$) | Crack-to-total area ratio, $\eta$ (unitless) | Crack depth below grade, $Z_{crack}$ (cm) | Enthalpy of vaporization at ave. soil temperature, $\Delta H_{v,TS}$ (cal/mol) | Henry's law constant at ave. soil temperature, $H_{TS}$ (atm-$m^3$/mol) | Henry's law constant at ave. soil temperature, $H'_{TS}$ (unitless) | Vapor viscosity at ave. soil temperature, $\mu_{TS}$ (g/cm-s) | Vadose zone effective diffusion coefficient, $D^{eff}_V$ ($cm^2/s$) | Diffusion path length, $L_d$ (cm) |
|---|---|---|---|---|---|---|---|---|
| 1.00E+06 | 5.00E-03 | 15 | 9,410 | 1.68E-02 | 6.88E-01 | 1.80E-04 | 2.91E-03 | 137 |

| Convection path length, $L_p$ (cm) | Source vapor conc., $C_{source}$ ($\mu g/m^3$) | Crack radius, $r_{crack}$ (cm) | Average vapor flow rate into bldg., $Q_{soil}$ ($cm^3/s$) | Crack effective diffusion coefficient, $D^{crack}$ ($cm^2/s$) | Area of crack, $A_{crack}$ ($cm^2$) | Exponent of equivalent foundation Peclet number, $exp(Pe^f)$ (unitless) | Infinite source indoor attenuation coefficient, $\alpha$ (unitless) | Infinite source bldg. conc., $C_{building}$ ($\mu g/m^3$) |
|---|---|---|---|---|---|---|---|---|
| 15 | 5.50E+02 | 1.25 | 8.33E+01 | 2.91E-03 | 5.00E+03 | 7.00E+24 | **2.50E-04** | 1.37E-01 |

| Unit risk factor, URF $(\mu g/m^3)^{-1}$ | Reference conc., RfC ($mg/m^3$) |
|---|---|
| 5.9E-06 | 3.5E-02 |

**END**

**Scenario:** **Commercial**
**Chemical:** **Tetrachloroethylene**

INCREMENTAL RISK CALCULATIONS:

| Incremental risk from vapor intrusion to indoor air, carcinogen (unitless) | Hazard quotient from vapor intrusion to indoor air, noncarcinogen (unitless) |
|---|---|
| **6.6E-08** | **9.0E-04** |

**MESSAGE SUMMARY BELOW:**

**END**

USEPA SG-SCREEN
Version 2.0, 04/2003

DTSC Modification
December 2014

# Department of Toxic Substances Control
# Vapor Intrusion Screening Model - Soil Gas

DATA ENTRY SHEET

**Scenario:** Residential
**Chemical:** Tetrachloroethylene

**Results Summary**

| Soil Gas Conc. ($\mu g/m^3$) | Attenuation Factor (unitless) | Indoor Air Conc. ($\mu g/m^3$) | Cancer Risk | Noncancer Hazard |
|---|---|---|---|---|
| 1.00E+03 | 1.8E-04 | 1.8E-01 | 3.8E-07 | 4.9E-03 |

Reset to Defaults

Soil Gas Concentration Data

| ENTER Chemical CAS No. (numbers only, no dashes) | ENTER Soil gas conc., $C_g$ ($\mu g/m^3$) | OR | ENTER Soil gas conc., $C_g$ (ppmv) | Chemical |
|---|---|---|---|---|
| 127184 | 1.00E+03 | | | Tetrachloroethylene |

MORE ↓

| ENTER Depth below grade to bottom of enclosed space floor, $L_F$ (15 or 200 cm) | ENTER Soil gas sampling depth below grade, $L_s$ (cm) | ENTER Average soil temperature, $T_S$ ($^oC$) | ENTER Vadose zone SCS soil type (used to estimate soil vapor permeability) | OR | ENTER User-defined vadose zone soil vapor permeability, $k_v$ ($cm^2$) |
|---|---|---|---|---|---|
| 15 | 457 | 24 | SIL | | |

MORE ↓

| ENTER Vandose zone SCS soil type (Lookup Soil Parameters) | ENTER Vadose zone soil dry bulk density, $\rho_b^A$ ($g/cm^3$) | ENTER Vadose zone soil total porosity, $n^V$ (unitless) | ENTER Vadose zone soil water-filled porosity, $\theta_w^V$ ($cm^3/cm^3$) | ENTER Average vapor flow rate into bldg. (Leave blank to calculate) $Q_{soil}$ (L/m) |
|---|---|---|---|---|
| SIL | 1.49 | 0.439 | 0.18 | 5 |

MORE ↓

Lookup Receptor Parameters

| | ENTER Averaging time for carcinogens, $AT_C$ (yrs) | ENTER Averaging time for noncarcinogens, $AT_{NC}$ (yrs) | ENTER Exposure duration, ED (yrs) | ENTER Exposure frequency, EF (days/yr) | ENTER Exposure Time ET (hrs/day) | ENTER Air Exchange Rate ACH $(hour)^{-1}$ |
|---|---|---|---|---|---|---|
| NEW=> Residential | 70 | 26 | 26 | 350 | 24 | 0.5 |
| | | | | | (NEW) | (NEW) |

END

## Tetrachloroethylene

| Diffusivity in air, $D_a$ ($cm^2/s$) | Diffusivity in water, $D_w$ ($cm^2/s$) | Henry's law constant at reference temperature, H (atm-$m^3$/mol) | Henry's law constant reference temperature, $T_R$ ($^oC$) | Enthalpy of vaporization at the normal boiling point, $\Delta H_{v,b}$ (cal/mol) | Normal boiling point, $T_B$ ($^oK$) | Critical temperature, $T_C$ ($^oK$) | Unit risk factor, URF ($\mu g/m^3)^{-1}$ | Reference conc., RfC ($mg/m^3$) | Molecular weight, MW (g/mol) |
|---|---|---|---|---|---|---|---|---|---|
| 5.05E-02 | 9.46E-06 | 1.77E-02 | 25 | 8,288 | 394.40 | 620.20 | 5.9E-06 | 3.5E-02 | 165.83 |

**END**

INTERMEDIATE CALCULATIONS SHEET

**Scenario:** **Residential**

**Chemical:** **Tetrachloroethylene**

| Source-building separation, $L_T$ (cm) | Vadose zone soil air-filled porosity, $\theta_a^V$ ($cm^3/cm^3$) | Vadose zone effective total fluid saturation, $S_{te}$ ($cm^3/cm^3$) | Vadose zone soil intrinsic permeability, $k_i$ ($cm^2$) | Vadose zone soil relative air permeability, $k_{rg}$ ($cm^2$) | Vadose zone soil effective vapor permeability, $k_v$ ($cm^2$) | Floor-wall seam perimeter, $X_{crack}$ (cm) | Soil gas conc. ($\mu g/m^3$) | Bldg. ventilation rate, $Q_{building}$ ($cm^3/s$) |
|---|---|---|---|---|---|---|---|---|
| 442 | 0.259 | 0.307 | 2.89E-09 | 0.798 | 2.30E-09 | 4,000 | 1.00E+03 | 3.39E+04 |

| Area of enclosed space below grade, $A_B$ ($cm^2$) | Crack-to-total area ratio, $\eta$ (unitless) | Crack depth below grade, $Z_{crack}$ (cm) | Enthalpy of vaporization at ave. soil temperature, $\Delta H_{v,TS}$ (cal/mol) | Henry's law constant at ave. soil temperature, $H_{TS}$ (atm-$m^3$/mol) | Henry's law constant at ave. soil temperature, $H'_{TS}$ (unitless) | Vapor viscosity at ave. soil temperature, $\mu_{TS}$ (g/cm-s) | Vadose zone effective diffusion coefficient, $D^{eff}_V$ ($cm^2/s$) | Diffusion path length, $L_d$ (cm) |
|---|---|---|---|---|---|---|---|---|
| 1.00E+06 | 5.00E-03 | 15 | 9,410 | 1.68E-02 | 6.88E-01 | 1.80E-04 | 2.91E-03 | 442 |

| Convection path length, $L_p$ (cm) | Source vapor conc., $C_{source}$ ($\mu g/m^3$) | Crack radius, $r_{crack}$ (cm) | Average vapor flow rate into bldg., $Q_{soil}$ ($cm^3/s$) | Crack effective diffusion coefficient, $D^{crack}$ ($cm^2/s$) | Area of crack, $A_{crack}$ ($cm^2$) | Exponent of equivalent foundation Peclet number, $exp(Pe^f)$ (unitless) | Infinite source indoor attenuation coefficient, $\alpha$ (unitless) | Infinite source bldg. conc., $C_{building}$ ($\mu g/m^3$) |
|---|---|---|---|---|---|---|---|---|
| 15 | 1.00E+03 | 1.25 | 8.33E+01 | 2.91E-03 | 5.00E+03 | 7.00E+24 | **1.80E-04** | 1.80E-01 |

| Unit risk factor, URF $(\mu g/m^3)^{-1}$ | Reference conc., RfC ($mg/m^3$) |
|---|---|
| 5.9E-06 | 3.5E-02 |

**END**

**Scenario:** **Residential**
**Chemical:** **Tetrachloroethylene**

INCREMENTAL RISK CALCULATIONS:

| Incremental risk from vapor intrusion to indoor air, carcinogen (unitless) | Hazard quotient from vapor intrusion to indoor air, noncarcinogen (unitless) |
|---|---|
| **3.8E-07** | **4.9E-03** |

**MESSAGE SUMMARY BELOW:**

**END**

USEPA SG-SCREEN
Version 2.0, 04/2003

DTSC Modification
December 2014

# Department of Toxic Substances Control
# Vapor Intrusion Screening Model - Soil Gas

DATA ENTRY SHEET

**Scenario:** Commercial
**Chemical:** Tetrachloroethylene

**Results Summary**

| Soil Gas Conc. ($\mu g/m^3$) | Attenuation Factor (unitless) | Indoor Air Conc. ($\mu g/m^3$) | Cancer Risk | Noncancer Hazard |
|---|---|---|---|---|
| 1.00E+03 | 9.0E-05 | 9.0E-02 | 4.3E-08 | 5.9E-04 |

Reset to Defaults

Soil Gas Concentration Data

| ENTER Chemical CAS No. (numbers only, no dashes) | ENTER Soil gas conc., $C_g$ ($\mu g/m^3$) | OR | ENTER Soil gas conc., $C_g$ (ppmv) | Chemical |
|---|---|---|---|---|
| 127184 | 1.00E+03 | | | Tetrachloroethylene |

MORE ↓

| ENTER Depth below grade to bottom of enclosed space floor, $L_F$ (15 or 200 cm) | ENTER Soil gas sampling depth below grade, $L_s$ (cm) | ENTER Average soil temperature, $T_S$ ($^oC$) | ENTER Vadose zone SCS soil type (used to estimate soil vapor permeability) | OR | ENTER User-defined vadose zone soil vapor permeability, $k_v$ ($cm^2$) |
|---|---|---|---|---|---|
| 15 | 457 | 24 | SIL | | |

MORE ↓

| ENTER Vandose zone SCS soil type (Lookup Soil Parameters) | ENTER Vadose zone soil dry bulk density, $\rho_b^A$ ($g/cm^3$) | ENTER Vadose zone soil total porosity, $n^V$ (unitless) | ENTER Vadose zone soil water-filled porosity, $\theta_w^V$ ($cm^3/cm^3$) | ENTER Average vapor flow rate into bldg. (Leave blank to calculate) $Q_{soil}$ (L/m) |
|---|---|---|---|---|
| SIL | 1.49 | 0.439 | 0.18 | 5 |

MORE ↓

Lookup Receptor Parameters

| | ENTER Averaging time for carcinogens, $AT_C$ (yrs) | ENTER Averaging time for noncarcinogens, $AT_{NC}$ (yrs) | ENTER Exposure duration, ED (yrs) | ENTER Exposure frequency, EF (days/yr) | ENTER Exposure Time ET (hrs/day) | ENTER Air Exchange Rate ACH $(hour)^{-1}$ |
|---|---|---|---|---|---|---|
| NEW=> Commercial | 70 | 25 | 25 | 250 | 8 | 1 |
| | | | | | (NEW) | (NEW) |

END

## Tetrachloroethylene

| Diffusivity in air, $D_a$ ($cm^2/s$) | Diffusivity in water, $D_w$ ($cm^2/s$) | Henry's law constant at reference temperature, H (atm-$m^3$/mol) | Henry's law constant reference temperature, $T_R$ ($^oC$) | Enthalpy of vaporization at the normal boiling point, $\Delta H_{v,b}$ (cal/mol) | Normal boiling point, $T_B$ ($^oK$) | Critical temperature, $T_C$ ($^oK$) | Unit risk factor, URF ($\mu g/m^3)^{-1}$ | Reference conc., RfC ($mg/m^3$) | Molecular weight, MW (g/mol) |
|---|---|---|---|---|---|---|---|---|---|
| 5.05E-02 | 9.46E-06 | 1.77E-02 | 25 | 8,288 | 394.40 | 620.20 | 5.9E-06 | 3.5E-02 | 165.83 |

**END**

**Scenario:** **Commercial**

**Chemical:** **Tetrachloroethylene**

| Source-building separation, $L_T$ (cm) | Vadose zone soil air-filled porosity, $\theta_a^V$ ($cm^3/cm^3$) | Vadose zone effective total fluid saturation, $S_{te}$ ($cm^3/cm^3$) | Vadose zone soil intrinsic permeability, $k_i$ ($cm^2$) | Vadose zone soil relative air permeability, $k_{rg}$ ($cm^2$) | Vadose zone soil effective vapor permeability, $k_v$ ($cm^2$) | Floor-wall seam perimeter, $X_{crack}$ (cm) | Soil gas conc. ($\mu g/m^3$) | Bldg. ventilation rate, $Q_{building}$ ($cm^3/s$) |
|---|---|---|---|---|---|---|---|---|
| 442 | 0.259 | 0.307 | 2.89E-09 | 0.798 | 2.30E-09 | 4,000 | 1.00E+03 | 6.78E+04 |

| Area of enclosed space below grade, $A_B$ ($cm^2$) | Crack-to-total area ratio, $\eta$ (unitless) | Crack depth below grade, $Z_{crack}$ (cm) | Enthalpy of vaporization at ave. soil temperature, $\Delta H_{v,TS}$ (cal/mol) | Henry's law constant at ave. soil temperature, $H_{TS}$ (atm-$m^3$/mol) | Henry's law constant at ave. soil temperature, $H'_{TS}$ (unitless) | Vapor viscosity at ave. soil temperature, $\mu_{TS}$ (g/cm-s) | Vadose zone effective diffusion coefficient, $D^{eff}_V$ ($cm^2/s$) | Diffusion path length, $L_d$ (cm) |
|---|---|---|---|---|---|---|---|---|
| 1.00E+06 | 5.00E-03 | 15 | 9,410 | 1.68E-02 | 6.88E-01 | 1.80E-04 | 2.91E-03 | 442 |

| Convection path length, $L_p$ (cm) | Source vapor conc., $C_{source}$ ($\mu g/m^3$) | Crack radius, $r_{crack}$ (cm) | Average vapor flow rate into bldg., $Q_{soil}$ ($cm^3/s$) | Crack effective diffusion coefficient, $D^{crack}$ ($cm^2/s$) | Area of crack, $A_{crack}$ ($cm^2$) | Exponent of equivalent foundation Peclet number, $exp(Pe^f)$ (unitless) | Infinite source indoor attenuation coefficient, $\alpha$ (unitless) | Infinite source bldg. conc., $C_{building}$ ($\mu g/m^3$) |
|---|---|---|---|---|---|---|---|---|
| 15 | 1.00E+03 | 1.25 | 8.33E+01 | 2.91E-03 | 5.00E+03 | 7.00E+24 | **9.01E-05** | 9.01E-02 |

| Unit risk factor, URF $(\mu g/m^3)^{-1}$ | Reference conc., RfC ($mg/m^3$) |
|---|---|
| 5.9E-06 | 3.5E-02 |

**END**

**Scenario:** **Commercial**
**Chemical:** **Tetrachloroethylene**

INCREMENTAL RISK CALCULATIONS:

| Incremental risk from vapor intrusion to indoor air, carcinogen (unitless) | Hazard quotient from vapor intrusion to indoor air, noncarcinogen (unitless) |
|---|---|
| **4.3E-08** | **5.9E-04** |

**MESSAGE SUMMARY BELOW:**

**END**

USEPA SG-SCREEN
Version 2.0, 04/2003

DTSC Modification
December 2014

# Department of Toxic Substances Control
# Vapor Intrusion Screening Model - Soil Gas

DATA ENTRY SHEET

**Scenario:** Residential
**Chemical:** Tetrachloroethylene

**Results Summary**

| Soil Gas Conc. ($\mu g/m^3$) | Attenuation Factor (unitless) | Indoor Air Conc. ($\mu g/m^3$) | Cancer Risk | Noncancer Hazard |
|---|---|---|---|---|
| 5.50E+02 | 5.0E-04 | 2.7E-01 | 5.8E-07 | 7.5E-03 |

Reset to Defaults

Soil Gas Concentration Data

| ENTER Chemical CAS No. (numbers only, no dashes) | ENTER Soil gas conc., $C_g$ ($\mu g/m^3$) | OR | ENTER Soil gas conc., $C_g$ (ppmv) | Chemical |
|---|---|---|---|---|
| 127184 | 5.50E+02 | | | Tetrachloroethylene |

MORE ↓

| ENTER Depth below grade to bottom of enclosed space floor, $L_F$ (15 or 200 cm) | ENTER Soil gas sampling depth below grade, $L_s$ (cm) | ENTER Average soil temperature, $T_S$ ($^oC$) | ENTER Vadose zone SCS soil type (used to estimate soil vapor permeability) | OR | ENTER User-defined vadose zone soil vapor permeability, $k_v$ ($cm^2$) |
|---|---|---|---|---|---|
| 15 | 152 | 24 | SIL | | |

MORE ↓

| ENTER Vandose zone SCS soil type (Lookup Soil Parameters) | ENTER Vadose zone soil dry bulk density, $\rho_b^A$ ($g/cm^3$) | ENTER Vadose zone soil total porosity, $n^V$ (unitless) | ENTER Vadose zone soil water-filled porosity, $\theta_w^V$ ($cm^3/cm^3$) | ENTER Average vapor flow rate into bldg. (Leave blank to calculate) $Q_{soil}$ (L/m) |
|---|---|---|---|---|
| SIL | 1.49 | 0.439 | 0.18 | 5 |

MORE ↓

Lookup Receptor Parameters

| | ENTER Averaging time for carcinogens, $AT_C$ (yrs) | ENTER Averaging time for noncarcinogens, $AT_{NC}$ (yrs) | ENTER Exposure duration, ED (yrs) | ENTER Exposure frequency, EF (days/yr) | ENTER Exposure Time ET (hrs/day) | ENTER Air Exchange Rate ACH $(hour)^{-1}$ |
|---|---|---|---|---|---|---|
| NEW=> Residential | 70 | 26 | 26 | 350 | 24 (NEW) | 0.5 (NEW) |

END

## Tetrachloroethylene

| Diffusivity in air, $D_a$ ($cm^2/s$) | Diffusivity in water, $D_w$ ($cm^2/s$) | Henry's law constant at reference temperature, H (atm-$m^3$/mol) | Henry's law constant reference temperature, $T_R$ ($^oC$) | Enthalpy of vaporization at the normal boiling point, $\Delta H_{v,b}$ (cal/mol) | Normal boiling point, $T_B$ ($^oK$) | Critical temperature, $T_C$ ($^oK$) | Unit risk factor, URF ($\mu g/m^3)^{-1}$ | Reference conc., RfC ($mg/m^3$) | Molecular weight, MW (g/mol) |
|---|---|---|---|---|---|---|---|---|---|
| 5.05E-02 | 9.46E-06 | 1.77E-02 | 25 | 8,288 | 394.40 | 620.20 | 5.9E-06 | 3.5E-02 | 165.83 |

**END**

**Scenario:** **Residential**

**Chemical:** **Tetrachloroethylene**

| Source-building separation, $L_T$ (cm) | Vadose zone soil air-filled porosity, $\theta_a^V$ ($cm^3/cm^3$) | Vadose zone effective total fluid saturation, $S_{te}$ ($cm^3/cm^3$) | Vadose zone soil intrinsic permeability, $k_i$ ($cm^2$) | Vadose zone soil relative air permeability, $k_{rg}$ ($cm^2$) | Vadose zone soil effective vapor permeability, $k_v$ ($cm^2$) | Floor-wall seam perimeter, $X_{crack}$ (cm) | Soil gas conc. ($\mu g/m^3$) | Bldg. ventilation rate, $Q_{building}$ ($cm^3/s$) |
|---|---|---|---|---|---|---|---|---|
| 137 | 0.259 | 0.307 | 2.89E-09 | 0.798 | 2.30E-09 | 4,000 | 5.50E+02 | 3.39E+04 |

| Area of enclosed space below grade, $A_B$ ($cm^2$) | Crack-to-total area ratio, $\eta$ (unitless) | Crack depth below grade, $Z_{crack}$ (cm) | Enthalpy of vaporization at ave. soil temperature, $\Delta H_{v,TS}$ (cal/mol) | Henry's law constant at ave. soil temperature, $H_{TS}$ (atm-$m^3$/mol) | Henry's law constant at ave. soil temperature, $H'_{TS}$ (unitless) | Vapor viscosity at ave. soil temperature, $\mu_{TS}$ (g/cm-s) | Vadose zone effective diffusion coefficient, $D^{eff}_V$ ($cm^2/s$) | Diffusion path length, $L_d$ (cm) |
|---|---|---|---|---|---|---|---|---|
| 1.00E+06 | 5.00E-03 | 15 | 9,410 | 1.68E-02 | 6.88E-01 | 1.80E-04 | 2.91E-03 | 137 |

| Convection path length, $L_p$ (cm) | Source vapor conc., $C_{source}$ ($\mu g/m^3$) | Crack radius, $r_{crack}$ (cm) | Average vapor flow rate into bldg., $Q_{soil}$ ($cm^3/s$) | Crack effective diffusion coefficient, $D^{crack}$ ($cm^2/s$) | Area of crack, $A_{crack}$ ($cm^2$) | Exponent of equivalent foundation Peclet number, $exp(Pe^f)$ (unitless) | Infinite source indoor attenuation coefficient, $\alpha$ (unitless) | Infinite source bldg. conc., $C_{building}$ ($\mu g/m^3$) |
|---|---|---|---|---|---|---|---|---|
| 15 | 5.50E+02 | 1.25 | 8.33E+01 | 2.91E-03 | 5.00E+03 | 7.00E+24 | **5.00E-04** | 2.75E-01 |

| Unit risk factor, URF $(\mu g/m^3)^{-1}$ | Reference conc., RfC ($mg/m^3$) |
|---|---|
| 5.9E-06 | 3.5E-02 |

**END**

**Scenario:** **Residential**
**Chemical:** **Tetrachloroethylene**

INCREMENTAL RISK CALCULATIONS:

| Incremental risk from vapor intrusion to indoor air, carcinogen (unitless) | Hazard quotient from vapor intrusion to indoor air, noncarcinogen (unitless) |
|---|---|
| **5.8E-07** | **7.5E-03** |

**MESSAGE SUMMARY BELOW:**

**END**

USEPA SG-SCREEN
Version 2.0, 04/2003

DTSC Modification
December 2014

# Department of Toxic Substances Control
# Vapor Intrusion Screening Model - Soil Gas

DATA ENTRY SHEET

**Scenario:** Commercial
**Chemical:** Tetrachloroethylene

**Results Summary**

| Soil Gas Conc. ($\mu g/m^3$) | Attenuation Factor (unitless) | Indoor Air Conc. ($\mu g/m^3$) | Cancer Risk | Noncancer Hazard |
|---|---|---|---|---|
| 5.50E+02 | 2.5E-04 | 1.4E-01 | 6.6E-08 | 9.0E-04 |

Reset to Defaults

Soil Gas Concentration Data

| ENTER Chemical CAS No. (numbers only, no dashes) | ENTER Soil gas conc., $C_g$ ($\mu g/m^3$) | OR | ENTER Soil gas conc., $C_g$ (ppmv) | Chemical |
|---|---|---|---|---|
| 127184 | 5.50E+02 | | | Tetrachloroethylene |

MORE ↓

| ENTER Depth below grade to bottom of enclosed space floor, $L_F$ (15 or 200 cm) | ENTER Soil gas sampling depth below grade, $L_s$ (cm) | ENTER Average soil temperature, $T_S$ ($^oC$) | ENTER Vadose zone SCS soil type (used to estimate soil vapor permeability) | OR | ENTER User-defined vadose zone soil vapor permeability, $k_v$ ($cm^2$) |
|---|---|---|---|---|---|
| 15 | 152 | 24 | SIL | | |

MORE ↓

| ENTER Vandose zone SCS soil type (Lookup Soil Parameters) | ENTER Vadose zone soil dry bulk density, $\rho_b^A$ ($g/cm^3$) | ENTER Vadose zone soil total porosity, $n^V$ (unitless) | ENTER Vadose zone soil water-filled porosity, $\theta_w^V$ ($cm^3/cm^3$) | ENTER Average vapor flow rate into bldg. (Leave blank to calculate) $Q_{soil}$ (L/m) |
|---|---|---|---|---|
| SIL | 1.49 | 0.439 | 0.18 | 5 |

MORE ↓

Lookup Receptor Parameters

| | ENTER Averaging time for carcinogens, $AT_C$ (yrs) | ENTER Averaging time for noncarcinogens, $AT_{NC}$ (yrs) | ENTER Exposure duration, ED (yrs) | ENTER Exposure frequency, EF (days/yr) | ENTER Exposure Time ET (hrs/day) | ENTER Air Exchange Rate ACH $(hour)^{-1}$ |
|---|---|---|---|---|---|---|
| NEW=> Commercial | 70 | 25 | 25 | 250 | 8 | 1 |
| | | | | | (NEW) | (NEW) |

END

## Tetrachloroethylene

| Diffusivity in air, $D_a$ ($cm^2/s$) | Diffusivity in water, $D_w$ ($cm^2/s$) | Henry's law constant at reference temperature, H (atm-$m^3$/mol) | Henry's law constant reference temperature, $T_R$ ($^oC$) | Enthalpy of vaporization at the normal boiling point, $\Delta H_{v,b}$ (cal/mol) | Normal boiling point, $T_B$ ($^oK$) | Critical temperature, $T_C$ ($^oK$) | Unit risk factor, URF ($\mu g/m^3)^{-1}$ | Reference conc., RfC ($mg/m^3$) | Molecular weight, MW (g/mol) |
|---|---|---|---|---|---|---|---|---|---|
| 5.05E-02 | 9.46E-06 | 1.77E-02 | 25 | 8,288 | 394.40 | 620.20 | 5.9E-06 | 3.5E-02 | 165.83 |

**END**

**Scenario:** **Commercial**

**Chemical:** **Tetrachloroethylene**

| Source-building separation, $L_T$ (cm) | Vadose zone soil air-filled porosity, $\theta_a^V$ ($cm^3/cm^3$) | Vadose zone effective total fluid saturation, $S_{te}$ ($cm^3/cm^3$) | Vadose zone soil intrinsic permeability, $k_i$ ($cm^2$) | Vadose zone soil relative air permeability, $k_{rg}$ ($cm^2$) | Vadose zone soil effective vapor permeability, $k_v$ ($cm^2$) | Floor-wall seam perimeter, $X_{crack}$ (cm) | Soil gas conc. ($\mu g/m^3$) | Bldg. ventilation rate, $Q_{building}$ ($cm^3/s$) |
|---|---|---|---|---|---|---|---|---|
| 137 | 0.259 | 0.307 | 2.89E-09 | 0.798 | 2.30E-09 | 4,000 | 5.50E+02 | 6.78E+04 |

| Area of enclosed space below grade, $A_B$ ($cm^2$) | Crack-to-total area ratio, $\eta$ (unitless) | Crack depth below grade, $Z_{crack}$ (cm) | Enthalpy of vaporization at ave. soil temperature, $\Delta H_{v,TS}$ (cal/mol) | Henry's law constant at ave. soil temperature, $H_{TS}$ (atm-$m^3$/mol) | Henry's law constant at ave. soil temperature, $H'_{TS}$ (unitless) | Vapor viscosity at ave. soil temperature, $\mu_{TS}$ (g/cm-s) | Vadose zone effective diffusion coefficient, $D^{eff}_V$ ($cm^2/s$) | Diffusion path length, $L_d$ (cm) |
|---|---|---|---|---|---|---|---|---|
| 1.00E+06 | 5.00E-03 | 15 | 9,410 | 1.68E-02 | 6.88E-01 | 1.80E-04 | 2.91E-03 | 137 |

| Convection path length, $L_p$ (cm) | Source vapor conc., $C_{source}$ ($\mu g/m^3$) | Crack radius, $r_{crack}$ (cm) | Average vapor flow rate into bldg., $Q_{soil}$ ($cm^3/s$) | Crack effective diffusion coefficient, $D^{crack}$ ($cm^2/s$) | Area of crack, $A_{crack}$ ($cm^2$) | Exponent of equivalent foundation Peclet number, $exp(Pe^f)$ (unitless) | Infinite source indoor attenuation coefficient, $\alpha$ (unitless) | Infinite source bldg. conc., $C_{building}$ ($\mu g/m^3$) |
|---|---|---|---|---|---|---|---|---|
| 15 | 5.50E+02 | 1.25 | 8.33E+01 | 2.91E-03 | 5.00E+03 | 7.00E+24 | **2.50E-04** | 1.37E-01 |

| Unit risk factor, URF $(\mu g/m^3)^{-1}$ | Reference conc., RfC ($mg/m^3$) |
|---|---|
| 5.9E-06 | 3.5E-02 |

**END**

**Scenario:** **Commercial**
**Chemical:** **Tetrachloroethylene**

INCREMENTAL RISK CALCULATIONS:

| Incremental risk from vapor intrusion to indoor air, carcinogen (unitless) | Hazard quotient from vapor intrusion to indoor air, noncarcinogen (unitless) |
|---|---|
| **6.6E-08** | **9.0E-04** |

**MESSAGE SUMMARY BELOW:**

**END**

USEPA SG-SCREEN
Version 2.0, 04/2003

DTSC Modification
December 2014

# Department of Toxic Substances Control
# Vapor Intrusion Screening Model - Soil Gas

DATA ENTRY SHEET

**Scenario:** Residential
**Chemical:** Tetrachloroethylene

**Results Summary**

| Soil Gas Conc. ($\mu g/m^3$) | Attenuation Factor (unitless) | Indoor Air Conc. ($\mu g/m^3$) | Cancer Risk | Noncancer Hazard |
|---|---|---|---|---|
| 7.50E+02 | 2.4E-04 | 1.8E-01 | 3.8E-07 | 5.0E-03 |

Reset to Defaults

Soil Gas Concentration Data

| ENTER Chemical CAS No. (numbers only, no dashes) | ENTER Soil gas conc., $C_g$ ($\mu g/m^3$) | OR | ENTER Soil gas conc., $C_g$ (ppmv) | Chemical |
|---|---|---|---|---|
| 127184 | 7.50E+02 | | | Tetrachloroethylene |

MORE ↓

| ENTER Depth below grade to bottom of enclosed space floor, $L_F$ (15 or 200 cm) | ENTER Soil gas sampling depth below grade, $L_s$ (cm) | ENTER Average soil temperature, $T_S$ ($^oC$) | ENTER Vadose zone SCS soil type (used to estimate soil vapor permeability) | OR | ENTER User-defined vadose zone soil vapor permeability, $k_v$ ($cm^2$) |
|---|---|---|---|---|---|
| 15 | 335 | 24 | SIL | | |

MORE ↓

| ENTER Vandose zone SCS soil type (Lookup Soil Parameters) | ENTER Vadose zone soil dry bulk density, $\rho_b^A$ ($g/cm^3$) | ENTER Vadose zone soil total porosity, $n^V$ (unitless) | ENTER Vadose zone soil water-filled porosity, $\theta_w^V$ ($cm^3/cm^3$) | ENTER Average vapor flow rate into bldg. (Leave blank to calculate) $Q_{soil}$ (L/m) |
|---|---|---|---|---|
| SIL | 1.49 | 0.439 | 0.18 | 5 |

MORE ↓

Lookup Receptor Parameters

| | ENTER Averaging time for carcinogens, $AT_C$ (yrs) | ENTER Averaging time for noncarcinogens, $AT_{NC}$ (yrs) | ENTER Exposure duration, ED (yrs) | ENTER Exposure frequency, EF (days/yr) | ENTER Exposure Time ET (hrs/day) | ENTER Air Exchange Rate ACH $(hour)^{-1}$ |
|---|---|---|---|---|---|---|
| NEW=> Residential | 70 | 26 | 26 | 350 | 24 (NEW) | 0.5 (NEW) |

END

## Tetrachloroethylene

| Diffusivity in air, $D_a$ ($cm^2/s$) | Diffusivity in water, $D_w$ ($cm^2/s$) | Henry's law constant at reference temperature, H (atm-$m^3$/mol) | Henry's law constant reference temperature, $T_R$ ($^oC$) | Enthalpy of vaporization at the normal boiling point, $\Delta H_{v,b}$ (cal/mol) | Normal boiling point, $T_B$ ($^oK$) | Critical temperature, $T_C$ ($^oK$) | Unit risk factor, URF ($\mu g/m^3)^{-1}$ | Reference conc., RfC ($mg/m^3$) | Molecular weight, MW (g/mol) |
|---|---|---|---|---|---|---|---|---|---|
| 5.05E-02 | 9.46E-06 | 1.77E-02 | 25 | 8,288 | 394.40 | 620.20 | 5.9E-06 | 3.5E-02 | 165.83 |

**END**

**Scenario:** **Residential**

**Chemical:** **Tetrachloroethylene**

| Source-building separation, $L_T$ (cm) | Vadose zone soil air-filled porosity, $\theta_a^V$ ($cm^3/cm^3$) | Vadose zone effective total fluid saturation, $S_{te}$ ($cm^3/cm^3$) | Vadose zone soil intrinsic permeability, $k_i$ ($cm^2$) | Vadose zone soil relative air permeability, $k_{rg}$ ($cm^2$) | Vadose zone soil effective vapor permeability, $k_v$ ($cm^2$) | Floor-wall seam perimeter, $X_{crack}$ (cm) | Soil gas conc. ($\mu g/m^3$) | Bldg. ventilation rate, $Q_{building}$ ($cm^3/s$) |
|---|---|---|---|---|---|---|---|---|
| 320 | 0.259 | 0.307 | 2.89E-09 | 0.798 | 2.30E-09 | 4,000 | 7.50E+02 | 3.39E+04 |

| Area of enclosed space below grade, $A_B$ ($cm^2$) | Crack-to-total area ratio, $\eta$ (unitless) | Crack depth below grade, $Z_{crack}$ (cm) | Enthalpy of vaporization at ave. soil temperature, $\Delta H_{v,TS}$ (cal/mol) | Henry's law constant at ave. soil temperature, $H_{TS}$ (atm-$m^3$/mol) | Henry's law constant at ave. soil temperature, $H'_{TS}$ (unitless) | Vapor viscosity at ave. soil temperature, $\mu_{TS}$ (g/cm-s) | Vadose zone effective diffusion coefficient, $D^{eff}_V$ ($cm^2/s$) | Diffusion path length, $L_d$ (cm) |
|---|---|---|---|---|---|---|---|---|
| 1.00E+06 | 5.00E-03 | 15 | 9,410 | 1.68E-02 | 6.88E-01 | 1.80E-04 | 2.91E-03 | 320 |

| Convection path length, $L_p$ (cm) | Source vapor conc., $C_{source}$ ($\mu g/m^3$) | Crack radius, $r_{crack}$ (cm) | Average vapor flow rate into bldg., $Q_{soil}$ ($cm^3/s$) | Crack effective diffusion coefficient, $D^{crack}$ ($cm^2/s$) | Area of crack, $A_{crack}$ ($cm^2$) | Exponent of equivalent foundation Peclet number, $exp(Pe^f)$ (unitless) | Infinite source indoor attenuation coefficient, $\alpha$ (unitless) | Infinite source bldg. conc., $C_{building}$ ($\mu g/m^3$) |
|---|---|---|---|---|---|---|---|---|
| 15 | 7.50E+02 | 1.25 | 8.33E+01 | 2.91E-03 | 5.00E+03 | 7.00E+24 | **2.42E-04** | 1.82E-01 |

| Unit risk factor, URF $(\mu g/m^3)^{-1}$ | Reference conc., RfC ($mg/m^3$) |
|---|---|
| 5.9E-06 | 3.5E-02 |

**END**

**Scenario:** **Residential**
**Chemical:** **Tetrachloroethylene**

INCREMENTAL RISK CALCULATIONS:

| Incremental risk from vapor intrusion to indoor air, carcinogen (unitless) | Hazard quotient from vapor intrusion to indoor air, noncarcinogen (unitless) |
|---|---|
| **3.8E-07** | **5.0E-03** |

**MESSAGE SUMMARY BELOW:**

**END**

USEPA SG-SCREEN
Version 2.0, 04/2003

DTSC Modification
December 2014

# Department of Toxic Substances Control
# Vapor Intrusion Screening Model - Soil Gas

DATA ENTRY SHEET

**Scenario:** Commercial
**Chemical:** Tetrachloroethylene

**Results Summary**

| Soil Gas Conc. ($\mu g/m^3$) | Attenuation Factor (unitless) | Indoor Air Conc. ($\mu g/m^3$) | Cancer Risk | Noncancer Hazard |
|---|---|---|---|---|
| 7.50E+02 | 1.2E-04 | 9.1E-02 | 4.4E-08 | 5.9E-04 |

Reset to Defaults

Soil Gas Concentration Data

| ENTER Chemical CAS No. (numbers only, no dashes) | ENTER Soil gas conc., $C_g$ ($\mu g/m^3$) | OR | ENTER Soil gas conc., $C_g$ (ppmv) | Chemical |
|---|---|---|---|---|
| 127184 | 7.50E+02 | | | Tetrachloroethylene |

MORE ↓

| ENTER Depth below grade to bottom of enclosed space floor, $L_F$ (15 or 200 cm) | ENTER Soil gas sampling depth below grade, $L_s$ (cm) | ENTER Average soil temperature, $T_S$ (°C) | ENTER Vadose zone SCS soil type (used to estimate soil vapor permeability) | OR | ENTER User-defined vadose zone soil vapor permeability, $k_v$ ($cm^2$) |
|---|---|---|---|---|---|
| 15 | 335 | 24 | SIL | | |

MORE ↓

| ENTER Vandose zone SCS soil type (Lookup Soil Parameters) | ENTER Vadose zone soil dry bulk density, $\rho_b^A$ ($g/cm^3$) | ENTER Vadose zone soil total porosity, $n^V$ (unitless) | ENTER Vadose zone soil water-filled porosity, $\theta_w^V$ ($cm^3/cm^3$) | ENTER Average vapor flow rate into bldg. (Leave blank to calculate) $Q_{soil}$ (L/m) |
|---|---|---|---|---|
| SIL | 1.49 | 0.439 | 0.18 | 5 |

MORE ↓

Lookup Receptor Parameters

| | ENTER Averaging time for carcinogens, $AT_C$ (yrs) | ENTER Averaging time for noncarcinogens, $AT_{NC}$ (yrs) | ENTER Exposure duration, ED (yrs) | ENTER Exposure frequency, EF (days/yr) | ENTER Exposure Time ET (hrs/day) | ENTER Air Exchange Rate ACH $(hour)^{-1}$ |
|---|---|---|---|---|---|---|
| NEW=> Commercial | 70 | 25 | 25 | 250 | 8 | 1 |
| | | | | | (NEW) | (NEW) |

END

## Tetrachloroethylene

| Diffusivity in air, $D_a$ ($cm^2/s$) | Diffusivity in water, $D_w$ ($cm^2/s$) | Henry's law constant at reference temperature, H (atm-$m^3$/mol) | Henry's law constant reference temperature, $T_R$ ($^oC$) | Enthalpy of vaporization at the normal boiling point, $\Delta H_{v,b}$ (cal/mol) | Normal boiling point, $T_B$ ($^oK$) | Critical temperature, $T_C$ ($^oK$) | Unit risk factor, URF ($\mu g/m^3)^{-1}$ | Reference conc., RfC ($mg/m^3$) | Molecular weight, MW (g/mol) |
|---|---|---|---|---|---|---|---|---|---|
| 5.05E-02 | 9.46E-06 | 1.77E-02 | 25 | 8,288 | 394.40 | 620.20 | 5.9E-06 | 3.5E-02 | 165.83 |

**END**

INTERMEDIATE CALCULATIONS SHEET

**Scenario:** **Commercial**

**Chemical:** **Tetrachloroethylene**

| Source-building separation, $L_T$ (cm) | Vadose zone soil air-filled porosity, $\theta_a^V$ ($cm^3/cm^3$) | Vadose zone effective total fluid saturation, $S_{te}$ ($cm^3/cm^3$) | Vadose zone soil intrinsic permeability, $k_i$ ($cm^2$) | Vadose zone soil relative air permeability, $k_{rg}$ ($cm^2$) | Vadose zone soil effective vapor permeability, $k_v$ ($cm^2$) | Floor-wall seam perimeter, $X_{crack}$ (cm) | Soil gas conc. ($\mu g/m^3$) | Bldg. ventilation rate, $Q_{building}$ ($cm^3/s$) |
|---|---|---|---|---|---|---|---|---|
| 320 | 0.259 | 0.307 | 2.89E-09 | 0.798 | 2.30E-09 | 4,000 | 7.50E+02 | 6.78E+04 |

| Area of enclosed space below grade, $A_B$ ($cm^2$) | Crack-to-total area ratio, $\eta$ (unitless) | Crack depth below grade, $Z_{crack}$ (cm) | Enthalpy of vaporization at ave. soil temperature, $\Delta H_{v,TS}$ (cal/mol) | Henry's law constant at ave. soil temperature, $H_{TS}$ (atm-$m^3$/mol) | Henry's law constant at ave. soil temperature, $H'_{TS}$ (unitless) | Vapor viscosity at ave. soil temperature, $\mu_{TS}$ (g/cm-s) | Vadose zone effective diffusion coefficient, $D^{eff}_V$ ($cm^2/s$) | Diffusion path length, $L_d$ (cm) |
|---|---|---|---|---|---|---|---|---|
| 1.00E+06 | 5.00E-03 | 15 | 9,410 | 1.68E-02 | 6.88E-01 | 1.80E-04 | 2.91E-03 | 320 |

| Convection path length, $L_p$ (cm) | Source vapor conc., $C_{source}$ ($\mu g/m^3$) | Crack radius, $r_{crack}$ (cm) | Average vapor flow rate into bldg., $Q_{soil}$ ($cm^3/s$) | Crack effective diffusion coefficient, $D^{crack}$ ($cm^2/s$) | Area of crack, $A_{crack}$ ($cm^2$) | Exponent of equivalent foundation Peclet number, $exp(Pe^f)$ (unitless) | Infinite source indoor attenuation coefficient, $\alpha$ (unitless) | Infinite source bldg. conc., $C_{building}$ ($\mu g/m^3$) |
|---|---|---|---|---|---|---|---|---|
| 15 | 7.50E+02 | 1.25 | 8.33E+01 | 2.91E-03 | 5.00E+03 | 7.00E+24 | **1.21E-04** | 9.08E-02 |

| Unit risk factor, URF $(\mu g/m^3)^{-1}$ | Reference conc., RfC ($mg/m^3$) |
|---|---|
| 5.9E-06 | 3.5E-02 |

**END**

**Scenario:** **Commercial**
**Chemical:** **Tetrachloroethylene**

INCREMENTAL RISK CALCULATIONS:

| Incremental risk from vapor intrusion to indoor air, carcinogen (unitless) | Hazard quotient from vapor intrusion to indoor air, noncarcinogen (unitless) |
|---|---|
| **4.4E-08** | **5.9E-04** |

**MESSAGE SUMMARY BELOW:**

**END**

USEPA SG-SCREEN
Version 2.0, 04/2003

DTSC Modification
December 2014

# Department of Toxic Substances Control
# Vapor Intrusion Screening Model - Soil Gas

DATA ENTRY SHEET

**Scenario:** Residential
**Chemical:** Tetrachloroethylene

**Results Summary**

| Soil Gas Conc. ($\mu g/m^3$) | Attenuation Factor (unitless) | Indoor Air Conc. ($\mu g/m^3$) | Cancer Risk | Noncancer Hazard |
|---|---|---|---|---|
| 9.30E+02 | 5.0E-04 | 4.6E-01 | 9.8E-07 | 1.3E-02 |

Reset to Defaults

Soil Gas Concentration Data

| ENTER Chemical CAS No. (numbers only, no dashes) | ENTER Soil gas conc., $C_g$ ($\mu g/m^3$) | OR | ENTER Soil gas conc., $C_g$ (ppmv) | Chemical |
|---|---|---|---|---|
| 127184 | 9.30E+02 | | | Tetrachloroethylene |

MORE ↓

| ENTER Depth below grade to bottom of enclosed space floor, $L_F$ (15 or 200 cm) | ENTER Soil gas sampling depth below grade, $L_s$ (cm) | ENTER Average soil temperature, $T_S$ (°C) | ENTER Vadose zone SCS soil type (used to estimate soil vapor permeability) | OR | ENTER User-defined vadose zone soil vapor permeability, $k_v$ ($cm^2$) |
|---|---|---|---|---|---|
| 15 | 152 | 24 | SIL | | |

MORE ↓

| ENTER Vandose zone SCS soil type (Lookup Soil Parameters) | ENTER Vadose zone soil dry bulk density, $\rho_b^A$ ($g/cm^3$) | ENTER Vadose zone soil total porosity, $n^V$ (unitless) | ENTER Vadose zone soil water-filled porosity, $\theta_w^V$ ($cm^3/cm^3$) | ENTER Average vapor flow rate into bldg. (Leave blank to calculate) $Q_{soil}$ (L/m) |
|---|---|---|---|---|
| SIL | 1.49 | 0.439 | 0.18 | 5 |

MORE ↓

Lookup Receptor Parameters

| | ENTER Averaging time for carcinogens, $AT_C$ (yrs) | ENTER Averaging time for noncarcinogens, $AT_{NC}$ (yrs) | ENTER Exposure duration, ED (yrs) | ENTER Exposure frequency, EF (days/yr) | ENTER Exposure Time ET (hrs/day) | ENTER Air Exchange Rate ACH $(hour)^{-1}$ |
|---|---|---|---|---|---|---|
| NEW=> Residential | 70 | 26 | 26 | 350 | 24 | 0.5 |
| | | | | | (NEW) | (NEW) |

END

## Tetrachloroethylene

| Diffusivity in air, $D_a$ ($cm^2/s$) | Diffusivity in water, $D_w$ ($cm^2/s$) | Henry's law constant at reference temperature, H (atm-$m^3$/mol) | Henry's law constant reference temperature, $T_R$ ($^oC$) | Enthalpy of vaporization at the normal boiling point, $\Delta H_{v,b}$ (cal/mol) | Normal boiling point, $T_B$ ($^oK$) | Critical temperature, $T_C$ ($^oK$) | Unit risk factor, URF ($\mu g/m^3)^{-1}$ | Reference conc., RfC ($mg/m^3$) | Molecular weight, MW (g/mol) |
|---|---|---|---|---|---|---|---|---|---|
| 5.05E-02 | 9.46E-06 | 1.77E-02 | 25 | 8,288 | 394.40 | 620.20 | 5.9E-06 | 3.5E-02 | 165.83 |

**END**

**Scenario:** **Residential**

**Chemical:** **Tetrachloroethylene**

| Source-building separation, $L_T$ (cm) | Vadose zone soil air-filled porosity, $\theta_a^V$ ($cm^3/cm^3$) | Vadose zone effective total fluid saturation, $S_{te}$ ($cm^3/cm^3$) | Vadose zone soil intrinsic permeability, $k_i$ ($cm^2$) | Vadose zone soil relative air permeability, $k_{rg}$ ($cm^2$) | Vadose zone soil effective vapor permeability, $k_v$ ($cm^2$) | Floor-wall seam perimeter, $X_{crack}$ (cm) | Soil gas conc. ($\mu g/m^3$) | Bldg. ventilation rate, $Q_{building}$ ($cm^3/s$) |
|---|---|---|---|---|---|---|---|---|
| 137 | 0.259 | 0.307 | 2.89E-09 | 0.798 | 2.30E-09 | 4,000 | 9.30E+02 | 3.39E+04 |

| Area of enclosed space below grade, $A_B$ ($cm^2$) | Crack-to-total area ratio, $\eta$ (unitless) | Crack depth below grade, $Z_{crack}$ (cm) | Enthalpy of vaporization at ave. soil temperature, $\Delta H_{v,TS}$ (cal/mol) | Henry's law constant at ave. soil temperature, $H_{TS}$ (atm-$m^3$/mol) | Henry's law constant at ave. soil temperature, $H'_{TS}$ (unitless) | Vapor viscosity at ave. soil temperature, $\mu_{TS}$ (g/cm-s) | Vadose zone effective diffusion coefficient, $D^{eff}_V$ ($cm^2/s$) | Diffusion path length, $L_d$ (cm) |
|---|---|---|---|---|---|---|---|---|
| 1.00E+06 | 5.00E-03 | 15 | 9,410 | 1.68E-02 | 6.88E-01 | 1.80E-04 | 2.91E-03 | 137 |

| Convection path length, $L_p$ (cm) | Source vapor conc., $C_{source}$ ($\mu g/m^3$) | Crack radius, $r_{crack}$ (cm) | Average vapor flow rate into bldg., $Q_{soil}$ ($cm^3/s$) | Crack effective diffusion coefficient, $D^{crack}$ ($cm^2/s$) | Area of crack, $A_{crack}$ ($cm^2$) | Exponent of equivalent foundation Peclet number, $exp(Pe^f)$ (unitless) | Infinite source indoor attenuation coefficient, $\alpha$ (unitless) | Infinite source bldg. conc., $C_{building}$ ($\mu g/m^3$) |
|---|---|---|---|---|---|---|---|---|
| 15 | 9.30E+02 | 1.25 | 8.33E+01 | 2.91E-03 | 5.00E+03 | 7.00E+24 | **5.00E-04** | 4.65E-01 |

| Unit risk factor, URF $(\mu g/m^3)^{-1}$ | Reference conc., RfC ($mg/m^3$) |
|---|---|
| 5.9E-06 | 3.5E-02 |

**END**

**Scenario:** **Residential**
**Chemical:** **Tetrachloroethylene**

INCREMENTAL RISK CALCULATIONS:

| Incremental risk from vapor intrusion to indoor air, carcinogen (unitless) | Hazard quotient from vapor intrusion to indoor air, noncarcinogen (unitless) |
|---|---|
| **9.8E-07** | **1.3E-02** |

**MESSAGE SUMMARY BELOW:**

**END**

USEPA SG-SCREEN
Version 2.0, 04/2003

DTSC Modification
December 2014

# Department of Toxic Substances Control
# Vapor Intrusion Screening Model - Soil Gas

DATA ENTRY SHEET

**Scenario:** Commercial
**Chemical:** Tetrachloroethylene

**Results Summary**

| Soil Gas Conc. ($\mu g/m^3$) | Attenuation Factor (unitless) | Indoor Air Conc. ($\mu g/m^3$) | Cancer Risk | Noncancer Hazard |
|---|---|---|---|---|
| 9.30E+02 | 2.5E-04 | 2.3E-01 | 1.1E-07 | 1.5E-03 |

Reset to Defaults

Soil Gas Concentration Data

| ENTER Chemical CAS No. (numbers only, no dashes) | ENTER Soil gas conc., $C_g$ ($\mu g/m^3$) | OR | ENTER Soil gas conc., $C_g$ (ppmv) | Chemical |
|---|---|---|---|---|
| 127184 | 9.30E+02 | | | Tetrachloroethylene |

MORE ↓

| ENTER Depth below grade to bottom of enclosed space floor, $L_F$ (15 or 200 cm) | ENTER Soil gas sampling depth below grade, $L_s$ (cm) | ENTER Average soil temperature, $T_S$ ($^oC$) | ENTER Vadose zone SCS soil type (used to estimate soil vapor permeability) | OR | ENTER User-defined vadose zone soil vapor permeability, $k_v$ ($cm^2$) |
|---|---|---|---|---|---|
| 15 | 152 | 24 | SIL | | |

MORE ↓

| ENTER Vandose zone SCS soil type (Lookup Soil Parameters) | ENTER Vadose zone soil dry bulk density, $\rho_b^A$ ($g/cm^3$) | ENTER Vadose zone soil total porosity, $n^V$ (unitless) | ENTER Vadose zone soil water-filled porosity, $\theta_w^V$ ($cm^3/cm^3$) | ENTER Average vapor flow rate into bldg. (Leave blank to calculate) $Q_{soil}$ (L/m) |
|---|---|---|---|---|
| SIL | 1.49 | 0.439 | 0.18 | 5 |

MORE ↓

Lookup Receptor Parameters

| | ENTER Averaging time for carcinogens, $AT_C$ (yrs) | ENTER Averaging time for noncarcinogens, $AT_{NC}$ (yrs) | ENTER Exposure duration, ED (yrs) | ENTER Exposure frequency, EF (days/yr) | ENTER Exposure Time ET (hrs/day) | ENTER Air Exchange Rate ACH $(hour)^{-1}$ |
|---|---|---|---|---|---|---|
| NEW=> Commercial | 70 | 25 | 25 | 250 | 8 | 1 |
| | | | | | (NEW) | (NEW) |

END

## Tetrachloroethylene

| Diffusivity in air, $D_a$ ($cm^2/s$) | Diffusivity in water, $D_w$ ($cm^2/s$) | Henry's law constant at reference temperature, H (atm-$m^3$/mol) | Henry's law constant reference temperature, $T_R$ ($^oC$) | Enthalpy of vaporization at the normal boiling point, $\Delta H_{v,b}$ (cal/mol) | Normal boiling point, $T_B$ ($^oK$) | Critical temperature, $T_C$ ($^oK$) | Unit risk factor, URF ($\mu g/m^3)^{-1}$ | Reference conc., RfC ($mg/m^3$) | Molecular weight, MW (g/mol) |
|---|---|---|---|---|---|---|---|---|---|
| 5.05E-02 | 9.46E-06 | 1.77E-02 | 25 | 8,288 | 394.40 | 620.20 | 5.9E-06 | 3.5E-02 | 165.83 |

**END**

**Scenario:** **Commercial**

**Chemical:** **Tetrachloroethylene**

| Source-building separation, $L_T$ (cm) | Vadose zone soil air-filled porosity, $\theta_a^V$ ($cm^3/cm^3$) | Vadose zone effective total fluid saturation, $S_{te}$ ($cm^3/cm^3$) | Vadose zone soil intrinsic permeability, $k_i$ ($cm^2$) | Vadose zone soil relative air permeability, $k_{rg}$ ($cm^2$) | Vadose zone soil effective vapor permeability, $k_v$ ($cm^2$) | Floor-wall seam perimeter, $X_{crack}$ (cm) | Soil gas conc. ($\mu g/m^3$) | Bldg. ventilation rate, $Q_{building}$ ($cm^3/s$) |
|---|---|---|---|---|---|---|---|---|
| 137 | 0.259 | 0.307 | 2.89E-09 | 0.798 | 2.30E-09 | 4,000 | 9.30E+02 | 6.78E+04 |

| Area of enclosed space below grade, $A_B$ ($cm^2$) | Crack-to-total area ratio, $\eta$ (unitless) | Crack depth below grade, $Z_{crack}$ (cm) | Enthalpy of vaporization at ave. soil temperature, $\Delta H_{v,TS}$ (cal/mol) | Henry's law constant at ave. soil temperature, $H_{TS}$ (atm-$m^3$/mol) | Henry's law constant at ave. soil temperature, $H'_{TS}$ (unitless) | Vapor viscosity at ave. soil temperature, $\mu_{TS}$ (g/cm-s) | Vadose zone effective diffusion coefficient, $D^{eff}_V$ ($cm^2/s$) | Diffusion path length, $L_d$ (cm) |
|---|---|---|---|---|---|---|---|---|
| 1.00E+06 | 5.00E-03 | 15 | 9,410 | 1.68E-02 | 6.88E-01 | 1.80E-04 | 2.91E-03 | 137 |

| Convection path length, $L_p$ (cm) | Source vapor conc., $C_{source}$ ($\mu g/m^3$) | Crack radius, $r_{crack}$ (cm) | Average vapor flow rate into bldg., $Q_{soil}$ ($cm^3/s$) | Crack effective diffusion coefficient, $D^{crack}$ ($cm^2/s$) | Area of crack, $A_{crack}$ ($cm^2$) | Exponent of equivalent foundation Peclet number, $exp(Pe^f)$ (unitless) | Infinite source indoor attenuation coefficient, $\alpha$ (unitless) | Infinite source bldg. conc., $C_{building}$ ($\mu g/m^3$) |
|---|---|---|---|---|---|---|---|---|
| 15 | 9.30E+02 | 1.25 | 8.33E+01 | 2.91E-03 | 5.00E+03 | 7.00E+24 | **2.50E-04** | 2.32E-01 |

| Unit risk factor, URF $(\mu g/m^3)^{-1}$ | Reference conc., RfC ($mg/m^3$) |
|---|---|
| 5.9E-06 | 3.5E-02 |

**END**

**Scenario:** **Commercial**
**Chemical:** **Tetrachloroethylene**

INCREMENTAL RISK CALCULATIONS:

| Incremental risk from vapor intrusion to indoor air, carcinogen (unitless) | Hazard quotient from vapor intrusion to indoor air, noncarcinogen (unitless) |
|---|---|
| **1.1E-07** | **1.5E-03** |

**MESSAGE SUMMARY BELOW:**

**END**

USEPA SG-SCREEN
Version 2.0, 04/2003

DTSC Modification
December 2014

# Department of Toxic Substances Control
# Vapor Intrusion Screening Model - Soil Gas

DATA ENTRY SHEET

**Scenario:** Residential
**Chemical:** Tetrachloroethylene

| Results Summary | | | | |
|---|---|---|---|---|
| Soil Gas Conc. ($\mu g/m^3$) | Attenuation Factor (unitless) | Indoor Air Conc. ($\mu g/m^3$) | Cancer Risk | Noncancer Hazard |
| 1.10E+03 | 2.4E-04 | 2.7E-01 | 5.6E-07 | 7.3E-03 |

Reset to Defaults

Soil Gas Concentration Data

| ENTER Chemical CAS No. (numbers only, no dashes) | ENTER Soil gas conc., $C_g$ ($\mu g/m^3$) | OR | ENTER Soil gas conc., $C_g$ (ppmv) | Chemical |
|---|---|---|---|---|
| 127184 | 1.10E+03 | | | Tetrachloroethylene |

MORE ↓

| ENTER Depth below grade to bottom of enclosed space floor, $L_F$ (15 or 200 cm) | ENTER Soil gas sampling depth below grade, $L_s$ (cm) | ENTER Average soil temperature, $T_S$ ($^oC$) | ENTER Vadose zone SCS soil type (used to estimate soil vapor permeability) | OR | ENTER User-defined vadose zone soil vapor permeability, $k_v$ ($cm^2$) |
|---|---|---|---|---|---|
| 15 | 335 | 24 | SIL | | |

MORE ↓

| ENTER Vandose zone SCS soil type (Lookup Soil Parameters) | ENTER Vadose zone soil dry bulk density, $\rho_b^A$ ($g/cm^3$) | ENTER Vadose zone soil total porosity, $n^V$ (unitless) | ENTER Vadose zone soil water-filled porosity, $\theta_w^V$ ($cm^3/cm^3$) | ENTER Average vapor flow rate into bldg. (Leave blank to calculate) $Q_{soil}$ (L/m) |
|---|---|---|---|---|
| SIL | 1.49 | 0.439 | 0.18 | 5 |

MORE ↓

Lookup Receptor Parameters

| | ENTER Averaging time for carcinogens, $AT_C$ (yrs) | ENTER Averaging time for noncarcinogens, $AT_{NC}$ (yrs) | ENTER Exposure duration, ED (yrs) | ENTER Exposure frequency, EF (days/yr) | ENTER Exposure Time ET (hrs/day) | ENTER Air Exchange Rate ACH $(hour)^{-1}$ |
|---|---|---|---|---|---|---|
| NEW=> Residential | 70 | 26 | 26 | 350 | 24 (NEW) | 0.5 (NEW) |

END

## Tetrachloroethylene

| Diffusivity in air, $D_a$ ($cm^2/s$) | Diffusivity in water, $D_w$ ($cm^2/s$) | Henry's law constant at reference temperature, H (atm-$m^3$/mol) | Henry's law constant reference temperature, $T_R$ ($^oC$) | Enthalpy of vaporization at the normal boiling point, $\Delta H_{v,b}$ (cal/mol) | Normal boiling point, $T_B$ ($^oK$) | Critical temperature, $T_C$ ($^oK$) | Unit risk factor, URF ($\mu g/m^3)^{-1}$ | Reference conc., RfC ($mg/m^3$) | Molecular weight, MW (g/mol) |
|---|---|---|---|---|---|---|---|---|---|
| 5.05E-02 | 9.46E-06 | 1.77E-02 | 25 | 8,288 | 394.40 | 620.20 | 5.9E-06 | 3.5E-02 | 165.83 |

**END**

**Scenario:** **Residential**

**Chemical:** **Tetrachloroethylene**

| Source-building separation, $L_T$ (cm) | Vadose zone soil air-filled porosity, $\theta_a^V$ ($cm^3/cm^3$) | Vadose zone effective total fluid saturation, $S_{te}$ ($cm^3/cm^3$) | Vadose zone soil intrinsic permeability, $k_i$ ($cm^2$) | Vadose zone soil relative air permeability, $k_{rg}$ ($cm^2$) | Vadose zone soil effective vapor permeability, $k_v$ ($cm^2$) | Floor-wall seam perimeter, $X_{crack}$ (cm) | Soil gas conc. ($\mu g/m^3$) | Bldg. ventilation rate, $Q_{building}$ ($cm^3/s$) |
|---|---|---|---|---|---|---|---|---|
| 320 | 0.259 | 0.307 | 2.89E-09 | 0.798 | 2.30E-09 | 4,000 | 1.10E+03 | 3.39E+04 |

| Area of enclosed space below grade, $A_B$ ($cm^2$) | Crack-to-total area ratio, $\eta$ (unitless) | Crack depth below grade, $Z_{crack}$ (cm) | Enthalpy of vaporization at ave. soil temperature, $\Delta H_{v,TS}$ (cal/mol) | Henry's law constant at ave. soil temperature, $H_{TS}$ (atm-$m^3$/mol) | Henry's law constant at ave. soil temperature, $H'_{TS}$ (unitless) | Vapor viscosity at ave. soil temperature, $\mu_{TS}$ (g/cm-s) | Vadose zone effective diffusion coefficient, $D^{eff}_V$ ($cm^2/s$) | Diffusion path length, $L_d$ (cm) |
|---|---|---|---|---|---|---|---|---|
| 1.00E+06 | 5.00E-03 | 15 | 9,410 | 1.68E-02 | 6.88E-01 | 1.80E-04 | 2.91E-03 | 320 |

| Convection path length, $L_p$ (cm) | Source vapor conc., $C_{source}$ ($\mu g/m^3$) | Crack radius, $r_{crack}$ (cm) | Average vapor flow rate into bldg., $Q_{soil}$ ($cm^3/s$) | Crack effective diffusion coefficient, $D^{crack}$ ($cm^2/s$) | Area of crack, $A_{crack}$ ($cm^2$) | Exponent of equivalent foundation Peclet number, $exp(Pe^f)$ (unitless) | Infinite source indoor attenuation coefficient, $\alpha$ (unitless) | Infinite source bldg. conc., $C_{building}$ ($\mu g/m^3$) |
|---|---|---|---|---|---|---|---|---|
| 15 | 1.10E+03 | 1.25 | 8.33E+01 | 2.91E-03 | 5.00E+03 | 7.00E+24 | **2.42E-04** | 2.66E-01 |

| Unit risk factor, URF $(\mu g/m^3)^{-1}$ | Reference conc., RfC ($mg/m^3$) |
|---|---|
| 5.9E-06 | 3.5E-02 |

**END**

**Scenario:** **Residential**
**Chemical:** **Tetrachloroethylene**

INCREMENTAL RISK CALCULATIONS:

| Incremental risk from vapor intrusion to indoor air, carcinogen (unitless) | Hazard quotient from vapor intrusion to indoor air, noncarcinogen (unitless) |
|---|---|
| **5.6E-07** | **7.3E-03** |

**MESSAGE SUMMARY BELOW:**

**END**

USEPA SG-SCREEN
Version 2.0, 04/2003

DTSC Modification
December 2014

# Department of Toxic Substances Control
# Vapor Intrusion Screening Model - Soil Gas

DATA ENTRY SHEET

**Scenario:** Commercial
**Chemical:** Tetrachloroethylene

**Results Summary**

| Soil Gas Conc. ($\mu g/m^3$) | Attenuation Factor (unitless) | Indoor Air Conc. ($\mu g/m^3$) | Cancer Risk | Noncancer Hazard |
|---|---|---|---|---|
| 1.10E+03 | 1.2E-04 | 1.3E-01 | 6.4E-08 | 8.7E-04 |

Reset to Defaults

Soil Gas Concentration Data

| ENTER Chemical CAS No. (numbers only, no dashes) | ENTER Soil gas conc., $C_g$ ($\mu g/m^3$) | OR | ENTER Soil gas conc., $C_g$ (ppmv) | Chemical |
|---|---|---|---|---|
| 127184 | 1.10E+03 | | | Tetrachloroethylene |

MORE ↓

| ENTER Depth below grade to bottom of enclosed space floor, $L_F$ (15 or 200 cm) | ENTER Soil gas sampling depth below grade, $L_s$ (cm) | ENTER Average soil temperature, $T_S$ ($^oC$) | ENTER Vadose zone SCS soil type (used to estimate soil vapor permeability) | OR | ENTER User-defined vadose zone soil vapor permeability, $k_v$ ($cm^2$) |
|---|---|---|---|---|---|
| 15 | 335 | 24 | SIL | | |

MORE ↓

| ENTER Vandose zone SCS soil type (Lookup Soil Parameters) | ENTER Vadose zone soil dry bulk density, $\rho_b^A$ ($g/cm^3$) | ENTER Vadose zone soil total porosity, $n^V$ (unitless) | ENTER Vadose zone soil water-filled porosity, $\theta_w^V$ ($cm^3/cm^3$) | ENTER Average vapor flow rate into bldg. (Leave blank to calculate) $Q_{soil}$ (L/m) |
|---|---|---|---|---|
| SIL | 1.49 | 0.439 | 0.18 | 5 |

MORE ↓

Lookup Receptor Parameters

| | ENTER Averaging time for carcinogens, $AT_C$ (yrs) | ENTER Averaging time for noncarcinogens, $AT_{NC}$ (yrs) | ENTER Exposure duration, ED (yrs) | ENTER Exposure frequency, EF (days/yr) | ENTER Exposure Time ET (hrs/day) | ENTER Air Exchange Rate ACH $(hour)^{-1}$ |
|---|---|---|---|---|---|---|
| NEW=> Commercial | 70 | 25 | 25 | 250 | 8 | 1 |
| | | | | | (NEW) | (NEW) |

END

## Tetrachloroethylene

| Diffusivity in air, $D_a$ ($cm^2/s$) | Diffusivity in water, $D_w$ ($cm^2/s$) | Henry's law constant at reference temperature, H (atm-$m^3$/mol) | Henry's law constant reference temperature, $T_R$ ($^oC$) | Enthalpy of vaporization at the normal boiling point, $\Delta H_{v,b}$ (cal/mol) | Normal boiling point, $T_B$ ($^oK$) | Critical temperature, $T_C$ ($^oK$) | Unit risk factor, URF ($\mu g/m^3)^{-1}$ | Reference conc., RfC ($mg/m^3$) | Molecular weight, MW (g/mol) |
|---|---|---|---|---|---|---|---|---|---|
| 5.05E-02 | 9.46E-06 | 1.77E-02 | 25 | 8,288 | 394.40 | 620.20 | 5.9E-06 | 3.5E-02 | 165.83 |

**END**

INTERMEDIATE CALCULATIONS SHEET

**Scenario:** **Commercial**

**Chemical:** **Tetrachloroethylene**

| Source-building separation, $L_T$ (cm) | Vadose zone soil air-filled porosity, $\theta_a^V$ ($cm^3/cm^3$) | Vadose zone effective total fluid saturation, $S_{te}$ ($cm^3/cm^3$) | Vadose zone soil intrinsic permeability, $k_i$ ($cm^2$) | Vadose zone soil relative air permeability, $k_{rg}$ ($cm^2$) | Vadose zone soil effective vapor permeability, $k_v$ ($cm^2$) | Floor-wall seam perimeter, $X_{crack}$ (cm) | Soil gas conc. ($\mu g/m^3$) | Bldg. ventilation rate, $Q_{building}$ ($cm^3/s$) |
|---|---|---|---|---|---|---|---|---|
| 320 | 0.259 | 0.307 | 2.89E-09 | 0.798 | 2.30E-09 | 4,000 | 1.10E+03 | 6.78E+04 |

| Area of enclosed space below grade, $A_B$ ($cm^2$) | Crack-to-total area ratio, $\eta$ (unitless) | Crack depth below grade, $Z_{crack}$ (cm) | Enthalpy of vaporization at ave. soil temperature, $\Delta H_{v,TS}$ (cal/mol) | Henry's law constant at ave. soil temperature, $H_{TS}$ (atm-$m^3$/mol) | Henry's law constant at ave. soil temperature, $H'_{TS}$ (unitless) | Vapor viscosity at ave. soil temperature, $\mu_{TS}$ (g/cm-s) | Vadose zone effective diffusion coefficient, $D^{eff}_V$ ($cm^2/s$) | Diffusion path length, $L_d$ (cm) |
|---|---|---|---|---|---|---|---|---|
| 1.00E+06 | 5.00E-03 | 15 | 9,410 | 1.68E-02 | 6.88E-01 | 1.80E-04 | 2.91E-03 | 320 |

| Convection path length, $L_p$ (cm) | Source vapor conc., $C_{source}$ ($\mu g/m^3$) | Crack radius, $r_{crack}$ (cm) | Average vapor flow rate into bldg., $Q_{soil}$ ($cm^3/s$) | Crack effective diffusion coefficient, $D^{crack}$ ($cm^2/s$) | Area of crack, $A_{crack}$ ($cm^2$) | Exponent of equivalent foundation Peclet number, $exp(Pe^f)$ (unitless) | Infinite source indoor attenuation coefficient, $\alpha$ (unitless) | Infinite source bldg. conc., $C_{building}$ ($\mu g/m^3$) |
|---|---|---|---|---|---|---|---|---|
| 15 | 1.10E+03 | 1.25 | 8.33E+01 | 2.91E-03 | 5.00E+03 | 7.00E+24 | **1.21E-04** | 1.33E-01 |

| Unit risk factor, URF $(\mu g/m^3)^{-1}$ | Reference conc., RfC ($mg/m^3$) |
|---|---|
| 5.9E-06 | 3.5E-02 |

**END**

**Scenario:** **Commercial**
**Chemical:** **Tetrachloroethylene**

INCREMENTAL RISK CALCULATIONS:

| Incremental risk from vapor intrusion to indoor air, carcinogen (unitless) | Hazard quotient from vapor intrusion to indoor air, noncarcinogen (unitless) |
|---|---|
| **6.4E-08** | **8.7E-04** |

**MESSAGE SUMMARY BELOW:**

**END**

USEPA SG-SCREEN
Version 2.0, 04/2003

DTSC Modification
December 2014

# Department of Toxic Substances Control
# Vapor Intrusion Screening Model - Soil Gas

DATA ENTRY SHEET

**Scenario:** Residential
**Chemical:** Trichloroethylene

| Results Summary | | | | |
|---|---|---|---|---|
| Soil Gas Conc. ($\mu g/m^3$) | Attenuation Factor (unitless) | Indoor Air Conc. ($\mu g/m^3$) | Cancer Risk | Noncancer Hazard |
| 7.10E+03 | 1.2E-04 | 8.8E-01 | 1.3E-06 | 4.2E-01 |

Reset to Defaults

Soil Gas Concentration Data

| ENTER Chemical CAS No. (numbers only, no dashes) | ENTER Soil gas conc., $C_g$ ($\mu g/m^3$) | OR | ENTER Soil gas conc., $C_g$ (ppmv) | Chemical |
|---|---|---|---|---|
| 79016 | 7.10E+03 | | | Trichloroethylene |

MESSAGE: See VLOOKUP table comments on chemical properties and/or toxicity criteria for this chemical.

MORE ↓

| ENTER Depth below grade to bottom of enclosed space floor, $L_F$ (15 or 200 cm) | ENTER Soil gas sampling depth below grade, $L_s$ (cm) | ENTER Average soil temperature, $T_S$ ($^oC$) | ENTER Vadose zone SCS soil type (used to estimate soil vapor permeability) | OR | ENTER User-defined vadose zone soil vapor permeability, $k_v$ ($cm^2$) |
|---|---|---|---|---|---|
| 15 | 914 | 24 | SIL | | |

MORE ↓

| ENTER Vandose zone SCS soil type (Lookup Soil Parameters) | ENTER Vadose zone soil dry bulk density, $\rho_b^A$ ($g/cm^3$) | ENTER Vadose zone soil total porosity, $n^V$ (unitless) | ENTER Vadose zone soil water-filled porosity, $\theta_w^V$ ($cm^3/cm^3$) | ENTER Average vapor flow rate into bldg. (Leave blank to calculate) $Q_{soil}$ (L/m) |
|---|---|---|---|---|
| SIL | 1.49 | 0.439 | 0.18 | 5 |

MORE ↓

Lookup Receptor Parameters

| | ENTER Averaging time for carcinogens, $AT_C$ (yrs) | ENTER Averaging time for noncarcinogens, $AT_{NC}$ (yrs) | ENTER Exposure duration, ED (yrs) | ENTER Exposure frequency, EF (days/yr) | ENTER Exposure Time ET (hrs/day) | ENTER Air Exchange Rate ACH $(hour)^{-1}$ |
|---|---|---|---|---|---|---|
| NEW=> Residential | 70 | 26 | 26 | 350 | 24 | 0.5 |
| | | | | | (NEW) | (NEW) |

END

## Trichloroethylene

| Diffusivity in air, $D_a$ ($cm^2/s$) | Diffusivity in water, $D_w$ ($cm^2/s$) | Henry's law constant at reference temperature, H (atm-$m^3$/mol) | Henry's law constant reference temperature, $T_R$ ($^oC$) | Enthalpy of vaporization at the normal boiling point, $\Delta H_{v,b}$ (cal/mol) | Normal boiling point, $T_B$ ($^oK$) | Critical temperature, $T_C$ ($^oK$) | Unit risk factor, URF ($\mu g/m^3)^{-1}$ | Reference conc., RfC ($mg/m^3$) | Molecular weight, MW (g/mol) |
|---|---|---|---|---|---|---|---|---|---|
| 6.87E-02 | 1.02E-05 | 9.85E-03 | 25 | 7,505 | 360.36 | 544.20 | 4.1E-06 | 2.0E-03 | 131.39 |

**END**

**Scenario:** **Residential**

**Chemical:** **Trichloroethylene**

| Source-building separation, $L_T$ (cm) | Vadose zone soil air-filled porosity, $\theta_a^V$ ($cm^3/cm^3$) | Vadose zone effective total fluid saturation, $S_{te}$ ($cm^3/cm^3$) | Vadose zone soil intrinsic permeability, $k_i$ ($cm^2$) | Vadose zone soil relative air permeability, $k_{rg}$ ($cm^2$) | Vadose zone soil effective vapor permeability, $k_v$ ($cm^2$) | Floor-wall seam perimeter, $X_{crack}$ (cm) | Soil gas conc. ($\mu g/m^3$) | Bldg. ventilation rate, $Q_{building}$ ($cm^3/s$) |
|---|---|---|---|---|---|---|---|---|
| 899 | 0.259 | 0.307 | 2.89E-09 | 0.798 | 2.30E-09 | 4,000 | 7.10E+03 | 3.39E+04 |

| Area of enclosed space below grade, $A_B$ ($cm^2$) | Crack-to-total area ratio, $\eta$ (unitless) | Crack depth below grade, $Z_{crack}$ (cm) | Enthalpy of vaporization at ave. soil temperature, $\Delta H_{v,TS}$ (cal/mol) | Henry's law constant at ave. soil temperature, $H_{TS}$ (atm-$m^3$/mol) | Henry's law constant at ave. soil temperature, $H'_{TS}$ (unitless) | Vapor viscosity at ave. soil temperature, $\mu_{TS}$ (g/cm-s) | Vadose zone effective diffusion coefficient, $D^{eff}_V$ ($cm^2/s$) | Diffusion path length, $L_d$ (cm) |
|---|---|---|---|---|---|---|---|---|
| 1.00E+06 | 5.00E-03 | 15 | 8,382 | 9.39E-03 | 3.85E-01 | 1.80E-04 | 3.96E-03 | 899 |

| Convection path length, $L_p$ (cm) | Source vapor conc., $C_{source}$ ($\mu g/m^3$) | Crack radius, $r_{crack}$ (cm) | Average vapor flow rate into bldg., $Q_{soil}$ ($cm^3/s$) | Crack effective diffusion coefficient, $D^{crack}$ ($cm^2/s$) | Area of crack, $A_{crack}$ ($cm^2$) | Exponent of equivalent foundation Peclet number, $exp(Pe^f)$ (unitless) | Infinite source indoor attenuation coefficient, $\alpha$ (unitless) | Infinite source bldg. conc., $C_{building}$ ($\mu g/m^3$) |
|---|---|---|---|---|---|---|---|---|
| 15 | 7.10E+03 | 1.25 | 8.33E+01 | 3.96E-03 | 5.00E+03 | 1.82E+18 | **1.24E-04** | 8.77E-01 |

| Unit risk factor, URF $(\mu g/m^3)^{-1}$ | Reference conc., RfC ($mg/m^3$) |
|---|---|
| 4.1E-06 | 2.0E-03 |

**END**

**Scenario:** **Residential**
**Chemical:** **Trichloroethylene**

INCREMENTAL RISK CALCULATIONS:

| Incremental risk from vapor intrusion to indoor air, carcinogen (unitless) | Hazard quotient from vapor intrusion to indoor air, noncarcinogen (unitless) |
|---|---|
| **1.3E-06** | **4.2E-01** |

**MESSAGE SUMMARY BELOW:**

**END**

USEPA SG-SCREEN
Version 2.0, 04/2003

DTSC Modification
December 2014

# Department of Toxic Substances Control
# Vapor Intrusion Screening Model - Soil Gas

DATA ENTRY SHEET

**Scenario:** Commercial
**Chemical:** Trichloroethylene

| Results Summary | | | | |
|---|---|---|---|---|
| Soil Gas Conc. ($\mu g/m^3$) | Attenuation Factor (unitless) | Indoor Air Conc. ($\mu g/m^3$) | Cancer Risk | Noncancer Hazard |
| 7.10E+03 | 6.2E-05 | 4.4E-01 | 1.5E-07 | 5.0E-02 |

Reset to Defaults

Soil Gas Concentration Data

| ENTER Chemical CAS No. (numbers only, no dashes) | ENTER Soil gas conc., $C_g$ ($\mu g/m^3$) | OR | ENTER Soil gas conc., $C_g$ (ppmv) | Chemical |
|---|---|---|---|---|
| 79016 | 7.10E+03 | | | Trichloroethylene |

MESSAGE: See VLOOKUP table comments on chemical properties and/or toxicity criteria for this chemical.

MORE ↓

| ENTER Depth below grade to bottom of enclosed space floor, $L_F$ (15 or 200 cm) | ENTER Soil gas sampling depth below grade, $L_s$ (cm) | ENTER Average soil temperature, $T_S$ ($^oC$) | ENTER Vadose zone SCS soil type (used to estimate soil vapor permeability) | OR | ENTER User-defined vadose zone soil vapor permeability, $k_v$ ($cm^2$) |
|---|---|---|---|---|---|
| 15 | 914 | 24 | SIL | | |

MORE ↓

| ENTER Vandose zone SCS soil type (Lookup Soil Parameters) | ENTER Vadose zone soil dry bulk density, $\rho_b^A$ ($g/cm^3$) | ENTER Vadose zone soil total porosity, $n^V$ (unitless) | ENTER Vadose zone soil water-filled porosity, $\theta_w^V$ ($cm^3/cm^3$) | ENTER Average vapor flow rate into bldg. (Leave blank to calculate) $Q_{soil}$ (L/m) |
|---|---|---|---|---|
| SIL | 1.49 | 0.439 | 0.18 | 5 |

MORE ↓

Lookup Receptor Parameters

| | ENTER Averaging time for carcinogens, $AT_C$ (yrs) | ENTER Averaging time for noncarcinogens, $AT_{NC}$ (yrs) | ENTER Exposure duration, ED (yrs) | ENTER Exposure frequency, EF (days/yr) | ENTER Exposure Time ET (hrs/day) | ENTER Air Exchange Rate ACH $(hour)^{-1}$ |
|---|---|---|---|---|---|---|
| NEW=> Commercial | 70 | 25 | 25 | 250 | 8 | 1 |
| | | | | | (NEW) | (NEW) |

END

## Trichloroethylene

| Diffusivity in air, $D_a$ ($cm^2/s$) | Diffusivity in water, $D_w$ ($cm^2/s$) | Henry's law constant at reference temperature, H (atm-$m^3$/mol) | Henry's law constant reference temperature, $T_R$ ($^oC$) | Enthalpy of vaporization at the normal boiling point, $\Delta H_{v,b}$ (cal/mol) | Normal boiling point, $T_B$ ($^oK$) | Critical temperature, $T_C$ ($^oK$) | Unit risk factor, URF ($\mu g/m^3)^{-1}$ | Reference conc., RfC ($mg/m^3$) | Molecular weight, MW (g/mol) |
|---|---|---|---|---|---|---|---|---|---|
| 6.87E-02 | 1.02E-05 | 9.85E-03 | 25 | 7,505 | 360.36 | 544.20 | 4.1E-06 | 2.0E-03 | 131.39 |

**END**

INTERMEDIATE CALCULATIONS SHEET

**Scenario:** **Commercial**

**Chemical:** **Trichloroethylene**

| Source-building separation, $L_T$ (cm) | Vadose zone soil air-filled porosity, $\theta_a^V$ ($cm^3/cm^3$) | Vadose zone effective total fluid saturation, $S_{te}$ ($cm^3/cm^3$) | Vadose zone soil intrinsic permeability, $k_i$ ($cm^2$) | Vadose zone soil relative air permeability, $k_{rg}$ ($cm^2$) | Vadose zone soil effective vapor permeability, $k_v$ ($cm^2$) | Floor-wall seam perimeter, $X_{crack}$ (cm) | Soil gas conc. ($\mu g/m^3$) | Bldg. ventilation rate, $Q_{building}$ ($cm^3/s$) |
|---|---|---|---|---|---|---|---|---|
| 899 | 0.259 | 0.307 | 2.89E-09 | 0.798 | 2.30E-09 | 4,000 | 7.10E+03 | 6.78E+04 |

| Area of enclosed space below grade, $A_B$ ($cm^2$) | Crack-to-total area ratio, $\eta$ (unitless) | Crack depth below grade, $Z_{crack}$ (cm) | Enthalpy of vaporization at ave. soil temperature, $\Delta H_{v,TS}$ (cal/mol) | Henry's law constant at ave. soil temperature, $H_{TS}$ (atm-$m^3$/mol) | Henry's law constant at ave. soil temperature, $H'_{TS}$ (unitless) | Vapor viscosity at ave. soil temperature, $\mu_{TS}$ (g/cm-s) | Vadose zone effective diffusion coefficient, $D^{eff}_V$ ($cm^2/s$) | Diffusion path length, $L_d$ (cm) |
|---|---|---|---|---|---|---|---|---|
| 1.00E+06 | 5.00E-03 | 15 | 8,382 | 9.39E-03 | 3.85E-01 | 1.80E-04 | 3.96E-03 | 899 |

| Convection path length, $L_p$ (cm) | Source vapor conc., $C_{source}$ ($\mu g/m^3$) | Crack radius, $r_{crack}$ (cm) | Average vapor flow rate into bldg., $Q_{soil}$ ($cm^3/s$) | Crack effective diffusion coefficient, $D^{crack}$ ($cm^2/s$) | Area of crack, $A_{crack}$ ($cm^2$) | Exponent of equivalent foundation Peclet number, $exp(Pe^f)$ (unitless) | Infinite source indoor attenuation coefficient, $\alpha$ (unitless) | Infinite source bldg. conc., $C_{building}$ ($\mu g/m^3$) |
|---|---|---|---|---|---|---|---|---|
| 15 | 7.10E+03 | 1.25 | 8.33E+01 | 3.96E-03 | 5.00E+03 | 1.82E+18 | **6.18E-05** | 4.39E-01 |

| Unit risk factor, URF $(\mu g/m^3)^{-1}$ | Reference conc., RfC ($mg/m^3$) |
|---|---|
| 4.1E-06 | 2.0E-03 |

**END**

**Scenario:** **Commercial**
**Chemical:** **Trichloroethylene**

INCREMENTAL RISK CALCULATIONS:

| Incremental risk from vapor intrusion to indoor air, carcinogen (unitless) | Hazard quotient from vapor intrusion to indoor air, noncarcinogen (unitless) |
|---|---|
| **1.5E-07** | **5.0E-02** |

**MESSAGE SUMMARY BELOW:**

**END**

USEPA SG-SCREEN
Version 2.0, 04/2003

DTSC Modification
December 2014

# Department of Toxic Substances Control
# Vapor Intrusion Screening Model - Soil Gas

DATA ENTRY SHEET

**Scenario:** Residential
**Chemical:** Trichloroethylene

| Results Summary | | | | |
|---|---|---|---|---|
| Soil Gas Conc. ($\mu g/m^3$) | Attenuation Factor (unitless) | Indoor Air Conc. ($\mu g/m^3$) | Cancer Risk | Noncancer Hazard |
| 3.20E+02 | 2.4E-04 | 7.6E-02 | 1.1E-07 | 3.7E-02 |

Reset to Defaults

Soil Gas Concentration Data

| ENTER Chemical CAS No. (numbers only, no dashes) | ENTER Soil gas conc., $C_g$ ($\mu g/m^3$) | OR | ENTER Soil gas conc., $C_g$ (ppmv) | Chemical |
|---|---|---|---|---|
| 79016 | 3.20E+02 | | | Trichloroethylene |

MESSAGE: See VLOOKUP table comments on chemical properties and/or toxicity criteria for this chemical.

MORE ↓

| ENTER Depth below grade to bottom of enclosed space floor, $L_F$ (15 or 200 cm) | ENTER Soil gas sampling depth below grade, $L_s$ (cm) | ENTER Average soil temperature, $T_S$ ($^oC$) | ENTER Vadose zone SCS soil type (used to estimate soil vapor permeability) | OR | ENTER User-defined vadose zone soil vapor permeability, $k_v$ ($cm^2$) |
|---|---|---|---|---|---|
| 15 | 457 | 24 | SIL | | |

MORE ↓

| ENTER Vandose zone SCS soil type (Lookup Soil Parameters) | ENTER Vadose zone soil dry bulk density, $\rho_b^A$ ($g/cm^3$) | ENTER Vadose zone soil total porosity, $n^V$ (unitless) | ENTER Vadose zone soil water-filled porosity, $\theta_w^V$ ($cm^3/cm^3$) | ENTER Average vapor flow rate into bldg. (Leave blank to calculate) $Q_{soil}$ (L/m) |
|---|---|---|---|---|
| SIL | 1.49 | 0.439 | 0.18 | 5 |

MORE ↓

Lookup Receptor Parameters

| | ENTER Averaging time for carcinogens, $AT_C$ (yrs) | ENTER Averaging time for noncarcinogens, $AT_{NC}$ (yrs) | ENTER Exposure duration, ED (yrs) | ENTER Exposure frequency, EF (days/yr) | ENTER Exposure Time ET (hrs/day) | ENTER Air Exchange Rate ACH $(hour)^{-1}$ |
|---|---|---|---|---|---|---|
| NEW=> Residential | 70 | 26 | 26 | 350 | 24 (NEW) | 0.5 (NEW) |

END

## Trichloroethylene

| Diffusivity in air, $D_a$ ($cm^2/s$) | Diffusivity in water, $D_w$ ($cm^2/s$) | Henry's law constant at reference temperature, H (atm-$m^3$/mol) | Henry's law constant reference temperature, $T_R$ ($^oC$) | Enthalpy of vaporization at the normal boiling point, $\Delta H_{v,b}$ (cal/mol) | Normal boiling point, $T_B$ ($^oK$) | Critical temperature, $T_C$ ($^oK$) | Unit risk factor, URF ($\mu g/m^3)^{-1}$ | Reference conc., RfC ($mg/m^3$) | Molecular weight, MW (g/mol) |
|---|---|---|---|---|---|---|---|---|---|
| 6.87E-02 | 1.02E-05 | 9.85E-03 | 25 | 7,505 | 360.36 | 544.20 | 4.1E-06 | 2.0E-03 | 131.39 |

**END**

**Scenario:** **Residential**

**Chemical:** **Trichloroethylene**

| Source-building separation, $L_T$ (cm) | Vadose zone soil air-filled porosity, $\theta_a^V$ ($cm^3/cm^3$) | Vadose zone effective total fluid saturation, $S_{te}$ ($cm^3/cm^3$) | Vadose zone soil intrinsic permeability, $k_i$ ($cm^2$) | Vadose zone soil relative air permeability, $k_{rg}$ ($cm^2$) | Vadose zone soil effective vapor permeability, $k_v$ ($cm^2$) | Floor-wall seam perimeter, $X_{crack}$ (cm) | Soil gas conc. ($\mu g/m^3$) | Bldg. ventilation rate, $Q_{building}$ ($cm^3/s$) |
|---|---|---|---|---|---|---|---|---|
| 442 | 0.259 | 0.307 | 2.89E-09 | 0.798 | 2.30E-09 | 4,000 | 3.20E+02 | 3.39E+04 |

| Area of enclosed space below grade, $A_B$ ($cm^2$) | Crack-to-total area ratio, $\eta$ (unitless) | Crack depth below grade, $Z_{crack}$ (cm) | Enthalpy of vaporization at ave. soil temperature, $\Delta H_{v,TS}$ (cal/mol) | Henry's law constant at ave. soil temperature, $H_{TS}$ (atm-$m^3$/mol) | Henry's law constant at ave. soil temperature, $H'_{TS}$ (unitless) | Vapor viscosity at ave. soil temperature, $\mu_{TS}$ (g/cm-s) | Vadose zone effective diffusion coefficient, $D^{eff}_V$ ($cm^2/s$) | Diffusion path length, $L_d$ (cm) |
|---|---|---|---|---|---|---|---|---|
| 1.00E+06 | 5.00E-03 | 15 | 8,382 | 9.39E-03 | 3.85E-01 | 1.80E-04 | 3.96E-03 | 442 |

| Convection path length, $L_p$ (cm) | Source vapor conc., $C_{source}$ ($\mu g/m^3$) | Crack radius, $r_{crack}$ (cm) | Average vapor flow rate into bldg., $Q_{soil}$ ($cm^3/s$) | Crack effective diffusion coefficient, $D^{crack}$ ($cm^2/s$) | Area of crack, $A_{crack}$ ($cm^2$) | Exponent of equivalent foundation Peclet number, $exp(Pe^f)$ (unitless) | Infinite source indoor attenuation coefficient, $\alpha$ (unitless) | Infinite source bldg. conc., $C_{building}$ ($\mu g/m^3$) |
|---|---|---|---|---|---|---|---|---|
| 15 | 3.20E+02 | 1.25 | 8.33E+01 | 3.96E-03 | 5.00E+03 | 1.82E+18 | **2.39E-04** | 7.65E-02 |

| Unit risk factor, URF $(\mu g/m^3)^{-1}$ | Reference conc., RfC ($mg/m^3$) |
|---|---|
| 4.1E-06 | 2.0E-03 |

**END**

**Scenario:** **Residential**
**Chemical:** **Trichloroethylene**

INCREMENTAL RISK CALCULATIONS:

| Incremental risk from vapor intrusion to indoor air, carcinogen (unitless) | Hazard quotient from vapor intrusion to indoor air, noncarcinogen (unitless) |
|---|---|
| **1.1E-07** | **3.7E-02** |

**MESSAGE SUMMARY BELOW:**

**END**

USEPA SG-SCREEN
Version 2.0, 04/2003

DTSC Modification
December 2014

# Department of Toxic Substances Control
# Vapor Intrusion Screening Model - Soil Gas

DATA ENTRY SHEET

**Scenario:** Commercial
**Chemical:** Trichloroethylene

| Results Summary | | | | |
|---|---|---|---|---|
| Soil Gas Conc. ($\mu g/m^3$) | Attenuation Factor (unitless) | Indoor Air Conc. ($\mu g/m^3$) | Cancer Risk | Noncancer Hazard |
| 3.20E+02 | 1.2E-04 | 3.8E-02 | 1.3E-08 | 4.4E-03 |

Reset to Defaults

Soil Gas Concentration Data

| ENTER Chemical CAS No. (numbers only, no dashes) | ENTER Soil gas conc., $C_g$ ($\mu g/m^3$) | OR | ENTER Soil gas conc., $C_g$ (ppmv) | Chemical |
|---|---|---|---|---|
| 79016 | 3.20E+02 | | | Trichloroethylene |

MESSAGE: See VLOOKUP table comments on chemical properties and/or toxicity criteria for this chemical.

MORE ↓

| ENTER Depth below grade to bottom of enclosed space floor, $L_F$ (15 or 200 cm) | ENTER Soil gas sampling depth below grade, $L_s$ (cm) | ENTER Average soil temperature, $T_S$ ($^oC$) | ENTER Vadose zone SCS soil type (used to estimate soil vapor permeability) | OR | ENTER User-defined vadose zone soil vapor permeability, $k_v$ ($cm^2$) |
|---|---|---|---|---|---|
| 15 | 457 | 24 | SIL | | |

MORE ↓

| ENTER Vandose zone SCS soil type (Lookup Soil Parameters) | ENTER Vadose zone soil dry bulk density, $\rho_b^A$ ($g/cm^3$) | ENTER Vadose zone soil total porosity, $n^V$ (unitless) | ENTER Vadose zone soil water-filled porosity, $\theta_w^V$ ($cm^3/cm^3$) | ENTER Average vapor flow rate into bldg. (Leave blank to calculate) $Q_{soil}$ (L/m) |
|---|---|---|---|---|
| SIL | 1.49 | 0.439 | 0.18 | 5 |

MORE ↓

Lookup Receptor Parameters

| | ENTER Averaging time for carcinogens, $AT_C$ (yrs) | ENTER Averaging time for noncarcinogens, $AT_{NC}$ (yrs) | ENTER Exposure duration, ED (yrs) | ENTER Exposure frequency, EF (days/yr) | ENTER Exposure Time ET (hrs/day) | ENTER Air Exchange Rate ACH $(hour)^{-1}$ |
|---|---|---|---|---|---|---|
| NEW=> Commercial | 70 | 25 | 25 | 250 | 8 | 1 |
| | | | | | (NEW) | (NEW) |

END

## Trichloroethylene

| Diffusivity in air, $D_a$ ($cm^2/s$) | Diffusivity in water, $D_w$ ($cm^2/s$) | Henry's law constant at reference temperature, H (atm-$m^3$/mol) | Henry's law constant reference temperature, $T_R$ ($^oC$) | Enthalpy of vaporization at the normal boiling point, $\Delta H_{v,b}$ (cal/mol) | Normal boiling point, $T_B$ ($^oK$) | Critical temperature, $T_C$ ($^oK$) | Unit risk factor, URF ($\mu g/m^3)^{-1}$ | Reference conc., RfC ($mg/m^3$) | Molecular weight, MW (g/mol) |
|---|---|---|---|---|---|---|---|---|---|
| 6.87E-02 | 1.02E-05 | 9.85E-03 | 25 | 7,505 | 360.36 | 544.20 | 4.1E-06 | 2.0E-03 | 131.39 |

**END**

INTERMEDIATE CALCULATIONS SHEET

**Scenario:** **Commercial**

**Chemical:** **Trichloroethylene**

| Source-building separation, $L_T$ (cm) | Vadose zone soil air-filled porosity, $\theta_a^V$ ($cm^3/cm^3$) | Vadose zone effective total fluid saturation, $S_{te}$ ($cm^3/cm^3$) | Vadose zone soil intrinsic permeability, $k_i$ ($cm^2$) | Vadose zone soil relative air permeability, $k_{rg}$ ($cm^2$) | Vadose zone soil effective vapor permeability, $k_v$ ($cm^2$) | Floor-wall seam perimeter, $X_{crack}$ (cm) | Soil gas conc. ($\mu g/m^3$) | Bldg. ventilation rate, $Q_{building}$ ($cm^3/s$) |
|---|---|---|---|---|---|---|---|---|
| 442 | 0.259 | 0.307 | 2.89E-09 | 0.798 | 2.30E-09 | 4,000 | 3.20E+02 | 6.78E+04 |

| Area of enclosed space below grade, $A_B$ ($cm^2$) | Crack-to-total area ratio, $\eta$ (unitless) | Crack depth below grade, $Z_{crack}$ (cm) | Enthalpy of vaporization at ave. soil temperature, $\Delta H_{v,TS}$ (cal/mol) | Henry's law constant at ave. soil temperature, $H_{TS}$ (atm-$m^3$/mol) | Henry's law constant at ave. soil temperature, $H'_{TS}$ (unitless) | Vapor viscosity at ave. soil temperature, $\mu_{TS}$ (g/cm-s) | Vadose zone effective diffusion coefficient, $D^{eff}_V$ ($cm^2/s$) | Diffusion path length, $L_d$ (cm) |
|---|---|---|---|---|---|---|---|---|
| 1.00E+06 | 5.00E-03 | 15 | 8,382 | 9.39E-03 | 3.85E-01 | 1.80E-04 | 3.96E-03 | 442 |

| Convection path length, $L_p$ (cm) | Source vapor conc., $C_{source}$ ($\mu g/m^3$) | Crack radius, $r_{crack}$ (cm) | Average vapor flow rate into bldg., $Q_{soil}$ ($cm^3/s$) | Crack effective diffusion coefficient, $D^{crack}$ ($cm^2/s$) | Area of crack, $A_{crack}$ ($cm^2$) | Exponent of equivalent foundation Peclet number, $exp(Pe^f)$ (unitless) | Infinite source indoor attenuation coefficient, $\alpha$ (unitless) | Infinite source bldg. conc., $C_{building}$ ($\mu g/m^3$) |
|---|---|---|---|---|---|---|---|---|
| 15 | 3.20E+02 | 1.25 | 8.33E+01 | 3.96E-03 | 5.00E+03 | 1.82E+18 | **1.19E-04** | 3.82E-02 |

| Unit risk factor, URF $(\mu g/m^3)^{-1}$ | Reference conc., RfC ($mg/m^3$) |
|---|---|
| 4.1E-06 | 2.0E-03 |

**END**

**Scenario:** **Commercial**
**Chemical:** **Trichloroethylene**

INCREMENTAL RISK CALCULATIONS:

| Incremental risk from vapor intrusion to indoor air, carcinogen (unitless) | Hazard quotient from vapor intrusion to indoor air, noncarcinogen (unitless) |
|---|---|
| **1.3E-08** | **4.4E-03** |

**MESSAGE SUMMARY BELOW:**

**END**

USEPA SG-SCREEN
Version 2.0, 04/2003

DTSC Modification
December 2014

# Department of Toxic Substances Control
# Vapor Intrusion Screening Model - Soil Gas

DATA ENTRY SHEET

**Scenario:** Residential
**Chemical:** Trichloroethylene

| Results Summary | | | | |
|---|---|---|---|---|
| Soil Gas Conc. ($\mu g/m^3$) | Attenuation Factor (unitless) | Indoor Air Conc. ($\mu g/m^3$) | Cancer Risk | Noncancer Hazard |
| 9.10E+03 | 1.2E-04 | 1.1E+00 | 1.6E-06 | 5.4E-01 |

Reset to Defaults

Soil Gas Concentration Data

| ENTER Chemical CAS No. (numbers only, no dashes) | ENTER Soil gas conc., $C_g$ ($\mu g/m^3$) | OR | ENTER Soil gas conc., $C_g$ (ppmv) | Chemical |
|---|---|---|---|---|
| 79016 | 9.10E+03 | | | Trichloroethylene |

MESSAGE: See VLOOKUP table comments on chemical properties and/or toxicity criteria for this chemical.

MORE ↓

| ENTER Depth below grade to bottom of enclosed space floor, $L_F$ (15 or 200 cm) | ENTER Soil gas sampling depth below grade, $L_s$ (cm) | ENTER Average soil temperature, $T_S$ ($^oC$) | ENTER Vadose zone SCS soil type (used to estimate soil vapor permeability) | OR | ENTER User-defined vadose zone soil vapor permeability, $k_v$ ($cm^2$) |
|---|---|---|---|---|---|
| 15 | 914 | 24 | SIL | | |

MORE ↓

| ENTER Vandose zone SCS soil type (Lookup Soil Parameters) | ENTER Vadose zone soil dry bulk density, $\rho_b^A$ ($g/cm^3$) | ENTER Vadose zone soil total porosity, $n^V$ (unitless) | ENTER Vadose zone soil water-filled porosity, $\theta_w^V$ ($cm^3/cm^3$) | ENTER Average vapor flow rate into bldg. (Leave blank to calculate) $Q_{soil}$ (L/m) |
|---|---|---|---|---|
| SIL | 1.49 | 0.439 | 0.18 | 5 |

MORE ↓

Lookup Receptor Parameters

| | ENTER Averaging time for carcinogens, $AT_C$ (yrs) | ENTER Averaging time for noncarcinogens, $AT_{NC}$ (yrs) | ENTER Exposure duration, ED (yrs) | ENTER Exposure frequency, EF (days/yr) | ENTER Exposure Time ET (hrs/day) | ENTER Air Exchange Rate ACH $(hour)^{-1}$ |
|---|---|---|---|---|---|---|
| NEW=> Residential | 70 | 26 | 26 | 350 | 24 (NEW) | 0.5 (NEW) |

END

## Trichloroethylene

| Diffusivity in air, $D_a$ ($cm^2/s$) | Diffusivity in water, $D_w$ ($cm^2/s$) | Henry's law constant at reference temperature, H (atm-$m^3$/mol) | Henry's law constant reference temperature, $T_R$ ($^oC$) | Enthalpy of vaporization at the normal boiling point, $\Delta H_{v,b}$ (cal/mol) | Normal boiling point, $T_B$ ($^oK$) | Critical temperature, $T_C$ ($^oK$) | Unit risk factor, URF ($\mu g/m^3)^{-1}$ | Reference conc., RfC ($mg/m^3$) | Molecular weight, MW (g/mol) |
|---|---|---|---|---|---|---|---|---|---|
| 6.87E-02 | 1.02E-05 | 9.85E-03 | 25 | 7,505 | 360.36 | 544.20 | 4.1E-06 | 2.0E-03 | 131.39 |

**END**

**Scenario:** **Residential**

**Chemical:** **Trichloroethylene**

| Source-building separation, $L_T$ (cm) | Vadose zone soil air-filled porosity, $\theta_a^V$ ($cm^3/cm^3$) | Vadose zone effective total fluid saturation, $S_{te}$ ($cm^3/cm^3$) | Vadose zone soil intrinsic permeability, $k_i$ ($cm^2$) | Vadose zone soil relative air permeability, $k_{rg}$ ($cm^2$) | Vadose zone soil effective vapor permeability, $k_v$ ($cm^2$) | Floor-wall seam perimeter, $X_{crack}$ (cm) | Soil gas conc. ($\mu g/m^3$) | Bldg. ventilation rate, $Q_{building}$ ($cm^3/s$) |
|---|---|---|---|---|---|---|---|---|
| 899 | 0.259 | 0.307 | 2.89E-09 | 0.798 | 2.30E-09 | 4,000 | 9.10E+03 | 3.39E+04 |

| Area of enclosed space below grade, $A_B$ ($cm^2$) | Crack-to-total area ratio, $\eta$ (unitless) | Crack depth below grade, $Z_{crack}$ (cm) | Enthalpy of vaporization at ave. soil temperature, $\Delta H_{v,TS}$ (cal/mol) | Henry's law constant at ave. soil temperature, $H_{TS}$ (atm-$m^3$/mol) | Henry's law constant at ave. soil temperature, $H'_{TS}$ (unitless) | Vapor viscosity at ave. soil temperature, $\mu_{TS}$ (g/cm-s) | Vadose zone effective diffusion coefficient, $D^{eff}_V$ ($cm^2/s$) | Diffusion path length, $L_d$ (cm) |
|---|---|---|---|---|---|---|---|---|
| 1.00E+06 | 5.00E-03 | 15 | 8,382 | 9.39E-03 | 3.85E-01 | 1.80E-04 | 3.96E-03 | 899 |

| Convection path length, $L_p$ (cm) | Source vapor conc., $C_{source}$ ($\mu g/m^3$) | Crack radius, $r_{crack}$ (cm) | Average vapor flow rate into bldg., $Q_{soil}$ ($cm^3/s$) | Crack effective diffusion coefficient, $D^{crack}$ ($cm^2/s$) | Area of crack, $A_{crack}$ ($cm^2$) | Exponent of equivalent foundation Peclet number, $exp(Pe^f)$ (unitless) | Infinite source indoor attenuation coefficient, $\alpha$ (unitless) | Infinite source bldg. conc., $C_{building}$ ($\mu g/m^3$) |
|---|---|---|---|---|---|---|---|---|
| 15 | 9.10E+03 | 1.25 | 8.33E+01 | 3.96E-03 | 5.00E+03 | 1.82E+18 | **1.24E-04** | 1.12E+00 |

| Unit risk factor, URF $(\mu g/m^3)^{-1}$ | Reference conc., RfC ($mg/m^3$) |
|---|---|
| 4.1E-06 | 2.0E-03 |

**END**

**Scenario:** **Residential**
**Chemical:** **Trichloroethylene**

INCREMENTAL RISK CALCULATIONS:

| Incremental risk from vapor intrusion to indoor air, carcinogen (unitless) | Hazard quotient from vapor intrusion to indoor air, noncarcinogen (unitless) |
|---|---|
| **1.6E-06** | **5.4E-01** |

**MESSAGE SUMMARY BELOW:**

**END**

USEPA SG-SCREEN
Version 2.0, 04/2003

DTSC Modification
December 2014

# Department of Toxic Substances Control
# Vapor Intrusion Screening Model - Soil Gas

DATA ENTRY SHEET

**Scenario:** Commercial
**Chemical:** Trichloroethylene

| Results Summary | | | | |
|---|---|---|---|---|
| Soil Gas Conc. ($\mu g/m^3$) | Attenuation Factor (unitless) | Indoor Air Conc. ($\mu g/m^3$) | Cancer Risk | Noncancer Hazard |
| 9.10E+03 | 6.2E-05 | 5.6E-01 | 1.9E-07 | 6.4E-02 |

Reset to Defaults

Soil Gas Concentration Data

| ENTER Chemical CAS No. (numbers only, no dashes) | ENTER Soil gas conc., $C_g$ ($\mu g/m^3$) | OR | ENTER Soil gas conc., $C_g$ (ppmv) | Chemical |
|---|---|---|---|---|
| 79016 | 9.10E+03 | | | Trichloroethylene |

MESSAGE: See VLOOKUP table comments on chemical properties and/or toxicity criteria for this chemical.

MORE ↓

| ENTER Depth below grade to bottom of enclosed space floor, $L_F$ (15 or 200 cm) | ENTER Soil gas sampling depth below grade, $L_s$ (cm) | ENTER Average soil temperature, $T_S$ ($^oC$) | ENTER Vadose zone SCS soil type (used to estimate soil vapor permeability) | OR | ENTER User-defined vadose zone soil vapor permeability, $k_v$ ($cm^2$) |
|---|---|---|---|---|---|
| 15 | 914 | 24 | SIL | | |

MORE ↓

Lookup Soil Parameters

| ENTER Vandose zone SCS soil type | ENTER Vadose zone soil dry bulk density, $\rho_b^A$ ($g/cm^3$) | ENTER Vadose zone soil total porosity, $n^V$ (unitless) | ENTER Vadose zone soil water-filled porosity, $\theta_w^V$ ($cm^3/cm^3$) | ENTER Average vapor flow rate into bldg. (Leave blank to calculate) $Q_{soil}$ (L/m) |
|---|---|---|---|---|
| SIL | 1.49 | 0.439 | 0.18 | 5 |

MORE ↓

Lookup Receptor Parameters

| | ENTER Averaging time for carcinogens, $AT_C$ (yrs) | ENTER Averaging time for noncarcinogens, $AT_{NC}$ (yrs) | ENTER Exposure duration, ED (yrs) | ENTER Exposure frequency, EF (days/yr) | ENTER Exposure Time ET (hrs/day) | ENTER Air Exchange Rate ACH $(hour)^{-1}$ |
|---|---|---|---|---|---|---|
| NEW=> Commercial | 70 | 25 | 25 | 250 | 8 | 1 |
| | | | | | (NEW) | (NEW) |

END

## Trichloroethylene

| Diffusivity in air, $D_a$ ($cm^2/s$) | Diffusivity in water, $D_w$ ($cm^2/s$) | Henry's law constant at reference temperature, H (atm-$m^3$/mol) | Henry's law constant reference temperature, $T_R$ ($^oC$) | Enthalpy of vaporization at the normal boiling point, $\Delta H_{v,b}$ (cal/mol) | Normal boiling point, $T_B$ ($^oK$) | Critical temperature, $T_C$ ($^oK$) | Unit risk factor, URF ($\mu g/m^3)^{-1}$ | Reference conc., RfC ($mg/m^3$) | Molecular weight, MW (g/mol) |
|---|---|---|---|---|---|---|---|---|---|
| 6.87E-02 | 1.02E-05 | 9.85E-03 | 25 | 7,505 | 360.36 | 544.20 | 4.1E-06 | 2.0E-03 | 131.39 |

**END**

**Scenario:** **Commercial**

**Chemical:** **Trichloroethylene**

| Source-building separation, $L_T$ (cm) | Vadose zone soil air-filled porosity, $\theta_a^V$ ($cm^3/cm^3$) | Vadose zone effective total fluid saturation, $S_{te}$ ($cm^3/cm^3$) | Vadose zone soil intrinsic permeability, $k_i$ ($cm^2$) | Vadose zone soil relative air permeability, $k_{rg}$ ($cm^2$) | Vadose zone soil effective vapor permeability, $k_v$ ($cm^2$) | Floor-wall seam perimeter, $X_{crack}$ (cm) | Soil gas conc. ($\mu g/m^3$) | Bldg. ventilation rate, $Q_{building}$ ($cm^3/s$) |
|---|---|---|---|---|---|---|---|---|
| 899 | 0.259 | 0.307 | 2.89E-09 | 0.798 | 2.30E-09 | 4,000 | 9.10E+03 | 6.78E+04 |

| Area of enclosed space below grade, $A_B$ ($cm^2$) | Crack-to-total area ratio, $\eta$ (unitless) | Crack depth below grade, $Z_{crack}$ (cm) | Enthalpy of vaporization at ave. soil temperature, $\Delta H_{v,TS}$ (cal/mol) | Henry's law constant at ave. soil temperature, $H_{TS}$ (atm-$m^3$/mol) | Henry's law constant at ave. soil temperature, $H'_{TS}$ (unitless) | Vapor viscosity at ave. soil temperature, $\mu_{TS}$ (g/cm-s) | Vadose zone effective diffusion coefficient, $D^{eff}_V$ ($cm^2/s$) | Diffusion path length, $L_d$ (cm) |
|---|---|---|---|---|---|---|---|---|
| 1.00E+06 | 5.00E-03 | 15 | 8,382 | 9.39E-03 | 3.85E-01 | 1.80E-04 | 3.96E-03 | 899 |

| Convection path length, $L_p$ (cm) | Source vapor conc., $C_{source}$ ($\mu g/m^3$) | Crack radius, $r_{crack}$ (cm) | Average vapor flow rate into bldg., $Q_{soil}$ ($cm^3/s$) | Crack effective diffusion coefficient, $D^{crack}$ ($cm^2/s$) | Area of crack, $A_{crack}$ ($cm^2$) | Exponent of equivalent foundation Peclet number, $exp(Pe^f)$ (unitless) | Infinite source indoor attenuation coefficient, $\alpha$ (unitless) | Infinite source bldg. conc., $C_{building}$ ($\mu g/m^3$) |
|---|---|---|---|---|---|---|---|---|
| 15 | 9.10E+03 | 1.25 | 8.33E+01 | 3.96E-03 | 5.00E+03 | 1.82E+18 | **6.18E-05** | 5.62E-01 |

| Unit risk factor, URF $(\mu g/m^3)^{-1}$ | Reference conc., RfC ($mg/m^3$) |
|---|---|
| 4.1E-06 | 2.0E-03 |

**END**

**Scenario:** **Commercial**
**Chemical:** **Trichloroethylene**

INCREMENTAL RISK CALCULATIONS:

| Incremental risk from vapor intrusion to indoor air, carcinogen (unitless) | Hazard quotient from vapor intrusion to indoor air, noncarcinogen (unitless) |
|---|---|
| **1.9E-07** | **6.4E-02** |

**MESSAGE SUMMARY BELOW:**

**END**

USEPA SG-SCREEN
Version 2.0, 04/2003

DTSC Modification
December 2014

# Department of Toxic Substances Control
# Vapor Intrusion Screening Model - Soil Gas

DATA ENTRY SHEET

**Scenario:** Residential
**Chemical:** Trichloroethylene

| Results Summary | | | | |
|---|---|---|---|---|
| Soil Gas Conc. ($\mu g/m^3$) | Attenuation Factor (unitless) | Indoor Air Conc. ($\mu g/m^3$) | Cancer Risk | Noncancer Hazard |
| 2.50E+03 | 6.3E-04 | 1.6E+00 | 2.3E-06 | 7.6E-01 |

Reset to Defaults

Soil Gas Concentration Data

| ENTER Chemical CAS No. (numbers only, no dashes) | ENTER Soil gas conc., $C_g$ ($\mu g/m^3$) | OR | ENTER Soil gas conc., $C_g$ (ppmv) | Chemical |
|---|---|---|---|---|
| 79016 | 2.50E+03 | | | Trichloroethylene |

MESSAGE: See VLOOKUP table comments on chemical properties and/or toxicity criteria for this chemical.

MORE ↓

| ENTER Depth below grade to bottom of enclosed space floor, $L_F$ (15 or 200 cm) | ENTER Soil gas sampling depth below grade, $L_s$ (cm) | ENTER Average soil temperature, $T_S$ ($^oC$) | ENTER Vadose zone SCS soil type (used to estimate soil vapor permeability) | OR | ENTER User-defined vadose zone soil vapor permeability, $k_v$ ($cm^2$) |
|---|---|---|---|---|---|
| 15 | 152 | 24 | SIL | | |

MORE ↓

| ENTER Vandose zone SCS soil type (Lookup Soil Parameters) | ENTER Vadose zone soil dry bulk density, $\rho_b^A$ ($g/cm^3$) | ENTER Vadose zone soil total porosity, $n^V$ (unitless) | ENTER Vadose zone soil water-filled porosity, $\theta_w^V$ ($cm^3/cm^3$) | ENTER Average vapor flow rate into bldg. (Leave blank to calculate) $Q_{soil}$ (L/m) |
|---|---|---|---|---|
| SIL | 1.49 | 0.439 | 0.18 | 5 |

MORE ↓

Lookup Receptor Parameters

| | ENTER Averaging time for carcinogens, $AT_C$ (yrs) | ENTER Averaging time for noncarcinogens, $AT_{NC}$ (yrs) | ENTER Exposure duration, ED (yrs) | ENTER Exposure frequency, EF (days/yr) | ENTER Exposure Time ET (hrs/day) | ENTER Air Exchange Rate ACH $(hour)^{-1}$ |
|---|---|---|---|---|---|---|
| NEW=> Residential | 70 | 26 | 26 | 350 | 24 | 0.5 |
| | | | | | (NEW) | (NEW) |

END

## Trichloroethylene

| Diffusivity in air, $D_a$ ($cm^2/s$) | Diffusivity in water, $D_w$ ($cm^2/s$) | Henry's law constant at reference temperature, H (atm-$m^3$/mol) | Henry's law constant reference temperature, $T_R$ ($^oC$) | Enthalpy of vaporization at the normal boiling point, $\Delta H_{v,b}$ (cal/mol) | Normal boiling point, $T_B$ ($^oK$) | Critical temperature, $T_C$ ($^oK$) | Unit risk factor, URF ($\mu g/m^3)^{-1}$ | Reference conc., RfC ($mg/m^3$) | Molecular weight, MW (g/mol) |
|---|---|---|---|---|---|---|---|---|---|
| 6.87E-02 | 1.02E-05 | 9.85E-03 | 25 | 7,505 | 360.36 | 544.20 | 4.1E-06 | 2.0E-03 | 131.39 |

**END**

INTERMEDIATE CALCULATIONS SHEET

**Scenario:** **Residential**

**Chemical:** **Trichloroethylene**

| Source-building separation, $L_T$ (cm) | Vadose zone soil air-filled porosity, $\theta_a^V$ ($cm^3/cm^3$) | Vadose zone effective total fluid saturation, $S_{te}$ ($cm^3/cm^3$) | Vadose zone soil intrinsic permeability, $k_i$ ($cm^2$) | Vadose zone soil relative air permeability, $k_{rg}$ ($cm^2$) | Vadose zone soil effective vapor permeability, $k_v$ ($cm^2$) | Floor-wall seam perimeter, $X_{crack}$ (cm) | Soil gas conc. ($\mu g/m^3$) | Bldg. ventilation rate, $Q_{building}$ ($cm^3/s$) |
|---|---|---|---|---|---|---|---|---|
| 137 | 0.259 | 0.307 | 2.89E-09 | 0.798 | 2.30E-09 | 4,000 | 2.50E+03 | 3.39E+04 |

| Area of enclosed space below grade, $A_B$ ($cm^2$) | Crack-to-total area ratio, $\eta$ (unitless) | Crack depth below grade, $Z_{crack}$ (cm) | Enthalpy of vaporization at ave. soil temperature, $\Delta H_{v,TS}$ (cal/mol) | Henry's law constant at ave. soil temperature, $H_{TS}$ (atm-$m^3$/mol) | Henry's law constant at ave. soil temperature, $H'_{TS}$ (unitless) | Vapor viscosity at ave. soil temperature, $\mu_{TS}$ (g/cm-s) | Vadose zone effective diffusion coefficient, $D^{eff}_V$ ($cm^2/s$) | Diffusion path length, $L_d$ (cm) |
|---|---|---|---|---|---|---|---|---|
| 1.00E+06 | 5.00E-03 | 15 | 8,382 | 9.39E-03 | 3.85E-01 | 1.80E-04 | 3.96E-03 | 137 |

| Convection path length, $L_p$ (cm) | Source vapor conc., $C_{source}$ ($\mu g/m^3$) | Crack radius, $r_{crack}$ (cm) | Average vapor flow rate into bldg., $Q_{soil}$ ($cm^3/s$) | Crack effective diffusion coefficient, $D^{crack}$ ($cm^2/s$) | Area of crack, $A_{crack}$ ($cm^2$) | Exponent of equivalent foundation Peclet number, $exp(Pe^f)$ (unitless) | Infinite source indoor attenuation coefficient, $\alpha$ (unitless) | Infinite source bldg. conc., $C_{building}$ ($\mu g/m^3$) |
|---|---|---|---|---|---|---|---|---|
| 15 | 2.50E+03 | 1.25 | 8.33E+01 | 3.96E-03 | 5.00E+03 | 1.82E+18 | **6.34E-04** | 1.58E+00 |

| Unit risk factor, URF $(\mu g/m^3)^{-1}$ | Reference conc., RfC ($mg/m^3$) |
|---|---|
| 4.1E-06 | 2.0E-03 |

**END**

**Scenario:** **Residential**
**Chemical:** **Trichloroethylene**

INCREMENTAL RISK CALCULATIONS:

| Incremental risk from vapor intrusion to indoor air, carcinogen (unitless) | Hazard quotient from vapor intrusion to indoor air, noncarcinogen (unitless) |
|---|---|
| **2.3E-06** | **7.6E-01** |

**MESSAGE SUMMARY BELOW:**

**END**

USEPA SG-SCREEN
Version 2.0, 04/2003

DTSC Modification
December 2014

# Department of Toxic Substances Control
# Vapor Intrusion Screening Model - Soil Gas

DATA ENTRY SHEET

**Scenario:** Commercial
**Chemical:** Trichloroethylene

| Results Summary | | | | |
|---|---|---|---|---|
| Soil Gas Conc. ($\mu g/m^3$) | Attenuation Factor (unitless) | Indoor Air Conc. ($\mu g/m^3$) | Cancer Risk | Noncancer Hazard |
| 2.50E+03 | 3.2E-04 | 7.9E-01 | 2.6E-07 | 9.0E-02 |

Reset to Defaults

Soil Gas Concentration Data

| ENTER Chemical CAS No. (numbers only, no dashes) | ENTER Soil gas conc., $C_g$ ($\mu g/m^3$) | OR | ENTER Soil gas conc., $C_g$ (ppmv) | Chemical |
|---|---|---|---|---|
| 79016 | 2.50E+03 | | | Trichloroethylene |

MESSAGE: See VLOOKUP table comments on chemical properties and/or toxicity criteria for this chemical.

MORE ↓

| ENTER Depth below grade to bottom of enclosed space floor, $L_F$ (15 or 200 cm) | ENTER Soil gas sampling depth below grade, $L_s$ (cm) | ENTER Average soil temperature, $T_S$ ($^oC$) | ENTER Vadose zone SCS soil type (used to estimate soil vapor permeability) | OR | ENTER User-defined vadose zone soil vapor permeability, $k_v$ ($cm^2$) |
|---|---|---|---|---|---|
| 15 | 152 | 24 | SIL | | |

MORE ↓

| ENTER Vandose zone SCS soil type (Lookup Soil Parameters) | ENTER Vadose zone soil dry bulk density, $\rho_b^A$ ($g/cm^3$) | ENTER Vadose zone soil total porosity, $n^V$ (unitless) | ENTER Vadose zone soil water-filled porosity, $\theta_w^V$ ($cm^3/cm^3$) | ENTER Average vapor flow rate into bldg. (Leave blank to calculate) $Q_{soil}$ (L/m) |
|---|---|---|---|---|
| SIL | 1.49 | 0.439 | 0.18 | 5 |

MORE ↓

Lookup Receptor Parameters

| | ENTER Averaging time for carcinogens, $AT_C$ (yrs) | ENTER Averaging time for noncarcinogens, $AT_{NC}$ (yrs) | ENTER Exposure duration, ED (yrs) | ENTER Exposure frequency, EF (days/yr) | ENTER Exposure Time ET (hrs/day) | ENTER Air Exchange Rate ACH $(hour)^{-1}$ |
|---|---|---|---|---|---|---|
| NEW=> Commercial | 70 | 25 | 25 | 250 | 8 | 1 |
| | | | | | (NEW) | (NEW) |

END

## Trichloroethylene

| Diffusivity in air, $D_a$ ($cm^2/s$) | Diffusivity in water, $D_w$ ($cm^2/s$) | Henry's law constant at reference temperature, H (atm-$m^3$/mol) | Henry's law constant reference temperature, $T_R$ ($^oC$) | Enthalpy of vaporization at the normal boiling point, $\Delta H_{v,b}$ (cal/mol) | Normal boiling point, $T_B$ ($^oK$) | Critical temperature, $T_C$ ($^oK$) | Unit risk factor, URF ($\mu g/m^3)^{-1}$ | Reference conc., RfC ($mg/m^3$) | Molecular weight, MW (g/mol) |
|---|---|---|---|---|---|---|---|---|---|
| 6.87E-02 | 1.02E-05 | 9.85E-03 | 25 | 7,505 | 360.36 | 544.20 | 4.1E-06 | 2.0E-03 | 131.39 |

**END**

INTERMEDIATE CALCULATIONS SHEET

**Scenario:** **Commercial**

**Chemical:** **Trichloroethylene**

| Source-building separation, $L_T$ (cm) | Vadose zone soil air-filled porosity, $\theta_a^V$ ($cm^3/cm^3$) | Vadose zone effective total fluid saturation, $S_{te}$ ($cm^3/cm^3$) | Vadose zone soil intrinsic permeability, $k_i$ ($cm^2$) | Vadose zone soil relative air permeability, $k_{rg}$ ($cm^2$) | Vadose zone soil effective vapor permeability, $k_v$ ($cm^2$) | Floor-wall seam perimeter, $X_{crack}$ (cm) | Soil gas conc. ($\mu g/m^3$) | Bldg. ventilation rate, $Q_{building}$ ($cm^3/s$) |
|---|---|---|---|---|---|---|---|---|
| 137 | 0.259 | 0.307 | 2.89E-09 | 0.798 | 2.30E-09 | 4,000 | 2.50E+03 | 6.78E+04 |

| Area of enclosed space below grade, $A_B$ ($cm^2$) | Crack-to-total area ratio, $\eta$ (unitless) | Crack depth below grade, $Z_{crack}$ (cm) | Enthalpy of vaporization at ave. soil temperature, $\Delta H_{v,TS}$ (cal/mol) | Henry's law constant at ave. soil temperature, $H_{TS}$ (atm-$m^3$/mol) | Henry's law constant at ave. soil temperature, $H'_{TS}$ (unitless) | Vapor viscosity at ave. soil temperature, $\mu_{TS}$ (g/cm-s) | Vadose zone effective diffusion coefficient, $D^{eff}_V$ ($cm^2/s$) | Diffusion path length, $L_d$ (cm) |
|---|---|---|---|---|---|---|---|---|
| 1.00E+06 | 5.00E-03 | 15 | 8,382 | 9.39E-03 | 3.85E-01 | 1.80E-04 | 3.96E-03 | 137 |

| Convection path length, $L_p$ (cm) | Source vapor conc., $C_{source}$ ($\mu g/m^3$) | Crack radius, $r_{crack}$ (cm) | Average vapor flow rate into bldg., $Q_{soil}$ ($cm^3/s$) | Crack effective diffusion coefficient, $D^{crack}$ ($cm^2/s$) | Area of crack, $A_{crack}$ ($cm^2$) | Exponent of equivalent foundation Peclet number, $exp(Pe^f)$ (unitless) | Infinite source indoor attenuation coefficient, $\alpha$ (unitless) | Infinite source bldg. conc., $C_{building}$ ($\mu g/m^3$) |
|---|---|---|---|---|---|---|---|---|
| 15 | 2.50E+03 | 1.25 | 8.33E+01 | 3.96E-03 | 5.00E+03 | 1.82E+18 | **3.17E-04** | 7.92E-01 |

| Unit risk factor, URF $(\mu g/m^3)^{-1}$ | Reference conc., RfC ($mg/m^3$) |
|---|---|
| 4.1E-06 | 2.0E-03 |

**END**

**Scenario:** **Commercial**
**Chemical:** **Trichloroethylene**

INCREMENTAL RISK CALCULATIONS:

| Incremental risk from vapor intrusion to indoor air, carcinogen (unitless) | Hazard quotient from vapor intrusion to indoor air, noncarcinogen (unitless) |
|---|---|
| **2.6E-07** | **9.0E-02** |

**MESSAGE SUMMARY BELOW:**

**END**

USEPA SG-SCREEN
Version 2.0, 04/2003

DTSC Modification
December 2014

# Department of Toxic Substances Control
# Vapor Intrusion Screening Model - Soil Gas

DATA ENTRY SHEET

**Scenario:** Residential
**Chemical:** Trichloroethylene

| Results Summary | | | | |
|---|---|---|---|---|
| Soil Gas Conc. ($\mu g/m^3$) | Attenuation Factor (unitless) | Indoor Air Conc. ($\mu g/m^3$) | Cancer Risk | Noncancer Hazard |
| 7.20E+03 | 2.4E-04 | 1.7E+00 | 2.5E-06 | 8.2E-01 |

Reset to Defaults

Soil Gas Concentration Data

| ENTER Chemical CAS No. (numbers only, no dashes) | ENTER Soil gas conc., $C_g$ ($\mu g/m^3$) | OR | ENTER Soil gas conc., $C_g$ (ppmv) | Chemical |
|---|---|---|---|---|
| 79016 | 7.20E+03 | | | Trichloroethylene |

MESSAGE: See VLOOKUP table comments on chemical properties and/or toxicity criteria for this chemical.

MORE ↓

| ENTER Depth below grade to bottom of enclosed space floor, $L_F$ (15 or 200 cm) | ENTER Soil gas sampling depth below grade, $L_s$ (cm) | ENTER Average soil temperature, $T_S$ ($^oC$) | ENTER Vadose zone SCS soil type (used to estimate soil vapor permeability) | OR | ENTER User-defined vadose zone soil vapor permeability, $k_v$ ($cm^2$) |
|---|---|---|---|---|---|
| 15 | 457 | 24 | SIL | | |

MORE ↓

| ENTER Vandose zone SCS soil type (Lookup Soil Parameters) | ENTER Vadose zone soil dry bulk density, $\rho_b^A$ ($g/cm^3$) | ENTER Vadose zone soil total porosity, $n^V$ (unitless) | ENTER Vadose zone soil water-filled porosity, $\theta_w^V$ ($cm^3/cm^3$) | ENTER Average vapor flow rate into bldg. (Leave blank to calculate) $Q_{soil}$ (L/m) |
|---|---|---|---|---|
| SIL | 1.49 | 0.439 | 0.18 | 5 |

MORE ↓

Lookup Receptor Parameters

| | ENTER Averaging time for carcinogens, $AT_C$ (yrs) | ENTER Averaging time for noncarcinogens, $AT_{NC}$ (yrs) | ENTER Exposure duration, ED (yrs) | ENTER Exposure frequency, EF (days/yr) | ENTER Exposure Time ET (hrs/day) | ENTER Air Exchange Rate ACH $(hour)^{-1}$ |
|---|---|---|---|---|---|---|
| NEW=> Residential | 70 | 26 | 26 | 350 | 24 | 0.5 |
| | | | | | (NEW) | (NEW) |

END

## Trichloroethylene

| Diffusivity in air, $D_a$ ($cm^2/s$) | Diffusivity in water, $D_w$ ($cm^2/s$) | Henry's law constant at reference temperature, H (atm-$m^3$/mol) | Henry's law constant reference temperature, $T_R$ ($^oC$) | Enthalpy of vaporization at the normal boiling point, $\Delta H_{v,b}$ (cal/mol) | Normal boiling point, $T_B$ ($^oK$) | Critical temperature, $T_C$ ($^oK$) | Unit risk factor, URF ($\mu g/m^3)^{-1}$ | Reference conc., RfC ($mg/m^3$) | Molecular weight, MW (g/mol) |
|---|---|---|---|---|---|---|---|---|---|
| 6.87E-02 | 1.02E-05 | 9.85E-03 | 25 | 7,505 | 360.36 | 544.20 | 4.1E-06 | 2.0E-03 | 131.39 |

**END**

INTERMEDIATE CALCULATIONS SHEET

**Scenario:** **Residential**

**Chemical:** **Trichloroethylene**

| Source-building separation, $L_T$ (cm) | Vadose zone soil air-filled porosity, $\theta_a^V$ ($cm^3/cm^3$) | Vadose zone effective total fluid saturation, $S_{te}$ ($cm^3/cm^3$) | Vadose zone soil intrinsic permeability, $k_i$ ($cm^2$) | Vadose zone soil relative air permeability, $k_{rg}$ ($cm^2$) | Vadose zone soil effective vapor permeability, $k_v$ ($cm^2$) | Floor-wall seam perimeter, $X_{crack}$ (cm) | Soil gas conc. ($\mu g/m^3$) | Bldg. ventilation rate, $Q_{building}$ ($cm^3/s$) |
|---|---|---|---|---|---|---|---|---|
| 442 | 0.259 | 0.307 | 2.89E-09 | 0.798 | 2.30E-09 | 4,000 | 7.20E+03 | 3.39E+04 |

| Area of enclosed space below grade, $A_B$ ($cm^2$) | Crack-to-total area ratio, $\eta$ (unitless) | Crack depth below grade, $Z_{crack}$ (cm) | Enthalpy of vaporization at ave. soil temperature, $\Delta H_{v,TS}$ (cal/mol) | Henry's law constant at ave. soil temperature, $H_{TS}$ (atm-$m^3$/mol) | Henry's law constant at ave. soil temperature, $H'_{TS}$ (unitless) | Vapor viscosity at ave. soil temperature, $\mu_{TS}$ (g/cm-s) | Vadose zone effective diffusion coefficient, $D^{eff}_V$ ($cm^2/s$) | Diffusion path length, $L_d$ (cm) |
|---|---|---|---|---|---|---|---|---|
| 1.00E+06 | 5.00E-03 | 15 | 8,382 | 9.39E-03 | 3.85E-01 | 1.80E-04 | 3.96E-03 | 442 |

| Convection path length, $L_p$ (cm) | Source vapor conc., $C_{source}$ ($\mu g/m^3$) | Crack radius, $r_{crack}$ (cm) | Average vapor flow rate into bldg., $Q_{soil}$ ($cm^3/s$) | Crack effective diffusion coefficient, $D^{crack}$ ($cm^2/s$) | Area of crack, $A_{crack}$ ($cm^2$) | Exponent of equivalent foundation Peclet number, $exp(Pe^f)$ (unitless) | Infinite source indoor attenuation coefficient, $\alpha$ (unitless) | Infinite source bldg. conc., $C_{building}$ ($\mu g/m^3$) |
|---|---|---|---|---|---|---|---|---|
| 15 | 7.20E+03 | 1.25 | 8.33E+01 | 3.96E-03 | 5.00E+03 | 1.82E+18 | **2.39E-04** | 1.72E+00 |

| Unit risk factor, URF $(\mu g/m^3)^{-1}$ | Reference conc., RfC ($mg/m^3$) |
|---|---|
| 4.1E-06 | 2.0E-03 |

**END**

**Scenario:** **Residential**
**Chemical:** **Trichloroethylene**

INCREMENTAL RISK CALCULATIONS:

| Incremental risk from vapor intrusion to indoor air, carcinogen (unitless) | Hazard quotient from vapor intrusion to indoor air, noncarcinogen (unitless) |
|---|---|
| **2.5E-06** | **8.2E-01** |

**MESSAGE SUMMARY BELOW:**

**END**

USEPA SG-SCREEN
Version 2.0, 04/2003

DTSC Modification
December 2014

# Department of Toxic Substances Control
# Vapor Intrusion Screening Model - Soil Gas

DATA ENTRY SHEET

**Scenario:** Commercial
**Chemical:** Trichloroethylene

**Results Summary**

| Soil Gas Conc. ($\mu g/m^3$) | Attenuation Factor (unitless) | Indoor Air Conc. ($\mu g/m^3$) | Cancer Risk | Noncancer Hazard |
|---|---|---|---|---|
| 7.20E+03 | 1.2E-04 | 8.6E-01 | 2.9E-07 | 9.8E-02 |

Reset to Defaults

Soil Gas Concentration Data

| ENTER Chemical CAS No. (numbers only, no dashes) | ENTER Soil gas conc., $C_g$ ($\mu g/m^3$) | OR | ENTER Soil gas conc., $C_g$ (ppmv) | Chemical |
|---|---|---|---|---|
| 79016 | 7.20E+03 | | | Trichloroethylene |

MESSAGE: See VLOOKUP table comments on chemical properties and/or toxicity criteria for this chemical.

MORE ↓

| ENTER Depth below grade to bottom of enclosed space floor, $L_F$ (15 or 200 cm) | ENTER Soil gas sampling depth below grade, $L_s$ (cm) | ENTER Average soil temperature, $T_S$ ($^oC$) | ENTER Vadose zone SCS soil type (used to estimate soil vapor permeability) | OR | ENTER User-defined vadose zone soil vapor permeability, $k_v$ ($cm^2$) |
|---|---|---|---|---|---|
| 15 | 457 | 24 | SIL | | |

MORE ↓

| ENTER Vandose zone SCS soil type (Lookup Soil Parameters) | ENTER Vadose zone soil dry bulk density, $\rho_b^A$ ($g/cm^3$) | ENTER Vadose zone soil total porosity, $n^V$ (unitless) | ENTER Vadose zone soil water-filled porosity, $\theta_w^V$ ($cm^3/cm^3$) | ENTER Average vapor flow rate into bldg. (Leave blank to calculate) $Q_{soil}$ (L/m) |
|---|---|---|---|---|
| SIL | 1.49 | 0.439 | 0.18 | 5 |

MORE ↓

Lookup Receptor Parameters

| | ENTER Averaging time for carcinogens, $AT_C$ (yrs) | ENTER Averaging time for noncarcinogens, $AT_{NC}$ (yrs) | ENTER Exposure duration, ED (yrs) | ENTER Exposure frequency, EF (days/yr) | ENTER Exposure Time ET (hrs/day) | ENTER Air Exchange Rate ACH $(hour)^{-1}$ |
|---|---|---|---|---|---|---|
| NEW=> Commercial | 70 | 25 | 25 | 250 | 8 | 1 |
| | | | | | (NEW) | (NEW) |

END

## Trichloroethylene

| Diffusivity in air, $D_a$ ($cm^2/s$) | Diffusivity in water, $D_w$ ($cm^2/s$) | Henry's law constant at reference temperature, H (atm-$m^3$/mol) | Henry's law constant reference temperature, $T_R$ ($^oC$) | Enthalpy of vaporization at the normal boiling point, $\Delta H_{v,b}$ (cal/mol) | Normal boiling point, $T_B$ ($^oK$) | Critical temperature, $T_C$ ($^oK$) | Unit risk factor, URF ($\mu g/m^3)^{-1}$ | Reference conc., RfC ($mg/m^3$) | Molecular weight, MW (g/mol) |
|---|---|---|---|---|---|---|---|---|---|
| 6.87E-02 | 1.02E-05 | 9.85E-03 | 25 | 7,505 | 360.36 | 544.20 | 4.1E-06 | 2.0E-03 | 131.39 |

**END**

INTERMEDIATE CALCULATIONS SHEET

**Scenario:** **Commercial**

**Chemical:** **Trichloroethylene**

| Source-building separation, $L_T$ (cm) | Vadose zone soil air-filled porosity, $\theta_a^V$ ($cm^3/cm^3$) | Vadose zone effective total fluid saturation, $S_{te}$ ($cm^3/cm^3$) | Vadose zone soil intrinsic permeability, $k_i$ ($cm^2$) | Vadose zone soil relative air permeability, $k_{rg}$ ($cm^2$) | Vadose zone soil effective vapor permeability, $k_v$ ($cm^2$) | Floor-wall seam perimeter, $X_{crack}$ (cm) | Soil gas conc. ($\mu g/m^3$) | Bldg. ventilation rate, $Q_{building}$ ($cm^3/s$) |
|---|---|---|---|---|---|---|---|---|
| 442 | 0.259 | 0.307 | 2.89E-09 | 0.798 | 2.30E-09 | 4,000 | 7.20E+03 | 6.78E+04 |

| Area of enclosed space below grade, $A_B$ ($cm^2$) | Crack-to-total area ratio, $\eta$ (unitless) | Crack depth below grade, $Z_{crack}$ (cm) | Enthalpy of vaporization at ave. soil temperature, $\Delta H_{v,TS}$ (cal/mol) | Henry's law constant at ave. soil temperature, $H_{TS}$ (atm-$m^3$/mol) | Henry's law constant at ave. soil temperature, $H'_{TS}$ (unitless) | Vapor viscosity at ave. soil temperature, $\mu_{TS}$ (g/cm-s) | Vadose zone effective diffusion coefficient, $D^{eff}_V$ ($cm^2/s$) | Diffusion path length, $L_d$ (cm) |
|---|---|---|---|---|---|---|---|---|
| 1.00E+06 | 5.00E-03 | 15 | 8,382 | 9.39E-03 | 3.85E-01 | 1.80E-04 | 3.96E-03 | 442 |

| Convection path length, $L_p$ (cm) | Source vapor conc., $C_{source}$ ($\mu g/m^3$) | Crack radius, $r_{crack}$ (cm) | Average vapor flow rate into bldg., $Q_{soil}$ ($cm^3/s$) | Crack effective diffusion coefficient, $D^{crack}$ ($cm^2/s$) | Area of crack, $A_{crack}$ ($cm^2$) | Exponent of equivalent foundation Peclet number, $exp(Pe^f)$ (unitless) | Infinite source indoor attenuation coefficient, $\alpha$ (unitless) | Infinite source bldg. conc., $C_{building}$ ($\mu g/m^3$) |
|---|---|---|---|---|---|---|---|---|
| 15 | 7.20E+03 | 1.25 | 8.33E+01 | 3.96E-03 | 5.00E+03 | 1.82E+18 | **1.19E-04** | 8.60E-01 |

| Unit risk factor, URF $(\mu g/m^3)^{-1}$ | Reference conc., RfC ($mg/m^3$) |
|---|---|
| 4.1E-06 | 2.0E-03 |

**END**

**Scenario:** **Commercial**
**Chemical:** **Trichloroethylene**

INCREMENTAL RISK CALCULATIONS:

| Incremental risk from vapor intrusion to indoor air, carcinogen (unitless) | Hazard quotient from vapor intrusion to indoor air, noncarcinogen (unitless) |
|---|---|
| **2.9E-07** | **9.8E-02** |

**MESSAGE SUMMARY BELOW:**

**END**

USEPA SG-SCREEN
Version 2.0, 04/2003

DTSC Modification
December 2014

# Department of Toxic Substances Control
# Vapor Intrusion Screening Model - Soil Gas

DATA ENTRY SHEET

**Scenario:** Residential
**Chemical:** Trichloroethylene

| Results Summary | | | | |
|---|---|---|---|---|
| Soil Gas Conc. ($\mu g/m^3$) | Attenuation Factor (unitless) | Indoor Air Conc. ($\mu g/m^3$) | Cancer Risk | Noncancer Hazard |
| 4.50E+03 | 6.3E-04 | 2.9E+00 | 4.2E-06 | 1.4E+00 |

Reset to Defaults

Soil Gas Concentration Data

| ENTER Chemical CAS No. (numbers only, no dashes) | ENTER Soil gas conc., $C_g$ ($\mu g/m^3$) | OR | ENTER Soil gas conc., $C_g$ (ppmv) | Chemical |
|---|---|---|---|---|
| 79016 | 4.50E+03 | | | Trichloroethylene |

MESSAGE: See VLOOKUP table comments on chemical properties and/or toxicity criteria for this chemical.

MORE ↓

| ENTER Depth below grade to bottom of enclosed space floor, $L_F$ (15 or 200 cm) | ENTER Soil gas sampling depth below grade, $L_s$ (cm) | ENTER Average soil temperature, $T_S$ ($^oC$) | ENTER Vadose zone SCS soil type (used to estimate soil vapor permeability) | OR | ENTER User-defined vadose zone soil vapor permeability, $k_v$ ($cm^2$) |
|---|---|---|---|---|---|
| 15 | 152 | 24 | SIL | | |

MORE ↓

| ENTER Vandose zone SCS soil type (Lookup Soil Parameters) | ENTER Vadose zone soil dry bulk density, $\rho_b^A$ ($g/cm^3$) | ENTER Vadose zone soil total porosity, $n^V$ (unitless) | ENTER Vadose zone soil water-filled porosity, $\theta_w^V$ ($cm^3/cm^3$) | ENTER Average vapor flow rate into bldg. (Leave blank to calculate) $Q_{soil}$ (L/m) |
|---|---|---|---|---|
| SIL | 1.49 | 0.439 | 0.18 | 5 |

MORE ↓

Lookup Receptor Parameters

| | ENTER Averaging time for carcinogens, $AT_C$ (yrs) | ENTER Averaging time for noncarcinogens, $AT_{NC}$ (yrs) | ENTER Exposure duration, ED (yrs) | ENTER Exposure frequency, EF (days/yr) | ENTER Exposure Time ET (hrs/day) | ENTER Air Exchange Rate ACH $(hour)^{-1}$ |
|---|---|---|---|---|---|---|
| NEW=> Residential | 70 | 26 | 26 | 350 | 24 (NEW) | 0.5 (NEW) |

END

## Trichloroethylene

| Diffusivity in air, $D_a$ ($cm^2/s$) | Diffusivity in water, $D_w$ ($cm^2/s$) | Henry's law constant at reference temperature, H (atm-$m^3$/mol) | Henry's law constant reference temperature, $T_R$ ($^oC$) | Enthalpy of vaporization at the normal boiling point, $\Delta H_{v,b}$ (cal/mol) | Normal boiling point, $T_B$ ($^oK$) | Critical temperature, $T_C$ ($^oK$) | Unit risk factor, URF ($\mu g/m^3)^{-1}$ | Reference conc., RfC ($mg/m^3$) | Molecular weight, MW (g/mol) |
|---|---|---|---|---|---|---|---|---|---|
| 6.87E-02 | 1.02E-05 | 9.85E-03 | 25 | 7,505 | 360.36 | 544.20 | 4.1E-06 | 2.0E-03 | 131.39 |

**END**

**Scenario:** **Residential**

**Chemical:** **Trichloroethylene**

| Source-building separation, $L_T$ (cm) | Vadose zone soil air-filled porosity, $\theta_a^V$ ($cm^3/cm^3$) | Vadose zone effective total fluid saturation, $S_{te}$ ($cm^3/cm^3$) | Vadose zone soil intrinsic permeability, $k_i$ ($cm^2$) | Vadose zone soil relative air permeability, $k_{rg}$ ($cm^2$) | Vadose zone soil effective vapor permeability, $k_v$ ($cm^2$) | Floor-wall seam perimeter, $X_{crack}$ (cm) | Soil gas conc. ($\mu g/m^3$) | Bldg. ventilation rate, $Q_{building}$ ($cm^3/s$) |
|---|---|---|---|---|---|---|---|---|
| 137 | 0.259 | 0.307 | 2.89E-09 | 0.798 | 2.30E-09 | 4,000 | 4.50E+03 | 3.39E+04 |

| Area of enclosed space below grade, $A_B$ ($cm^2$) | Crack-to-total area ratio, $\eta$ (unitless) | Crack depth below grade, $Z_{crack}$ (cm) | Enthalpy of vaporization at ave. soil temperature, $\Delta H_{v,TS}$ (cal/mol) | Henry's law constant at ave. soil temperature, $H_{TS}$ (atm-$m^3$/mol) | Henry's law constant at ave. soil temperature, $H'_{TS}$ (unitless) | Vapor viscosity at ave. soil temperature, $\mu_{TS}$ (g/cm-s) | Vadose zone effective diffusion coefficient, $D^{eff}_V$ ($cm^2/s$) | Diffusion path length, $L_d$ (cm) |
|---|---|---|---|---|---|---|---|---|
| 1.00E+06 | 5.00E-03 | 15 | 8,382 | 9.39E-03 | 3.85E-01 | 1.80E-04 | 3.96E-03 | 137 |

| Convection path length, $L_p$ (cm) | Source vapor conc., $C_{source}$ ($\mu g/m^3$) | Crack radius, $r_{crack}$ (cm) | Average vapor flow rate into bldg., $Q_{soil}$ ($cm^3/s$) | Crack effective diffusion coefficient, $D^{crack}$ ($cm^2/s$) | Area of crack, $A_{crack}$ ($cm^2$) | Exponent of equivalent foundation Peclet number, $exp(Pe^f)$ (unitless) | Infinite source indoor attenuation coefficient, $\alpha$ (unitless) | Infinite source bldg. conc., $C_{building}$ ($\mu g/m^3$) |
|---|---|---|---|---|---|---|---|---|
| 15 | 4.50E+03 | 1.25 | 8.33E+01 | 3.96E-03 | 5.00E+03 | 1.82E+18 | **6.34E-04** | 2.85E+00 |

| Unit risk factor, URF $(\mu g/m^3)^{-1}$ | Reference conc., RfC ($mg/m^3$) |
|---|---|
| 4.1E-06 | 2.0E-03 |

**END**

**Scenario:** **Residential**
**Chemical:** **Trichloroethylene**

INCREMENTAL RISK CALCULATIONS:

| Incremental risk from vapor intrusion to indoor air, carcinogen (unitless) | Hazard quotient from vapor intrusion to indoor air, noncarcinogen (unitless) |
|---|---|
| **4.2E-06** | **1.4E+00** |

**MESSAGE SUMMARY BELOW:**

**END**

USEPA SG-SCREEN
Version 2.0, 04/2003

DTSC Modification
December 2014

# Department of Toxic Substances Control
# Vapor Intrusion Screening Model - Soil Gas

DATA ENTRY SHEET

**Scenario:** Commercial
**Chemical:** Trichloroethylene

| Results Summary | | | | |
|---|---|---|---|---|
| Soil Gas Conc. ($\mu g/m^3$) | Attenuation Factor (unitless) | Indoor Air Conc. ($\mu g/m^3$) | Cancer Risk | Noncancer Hazard |
| 4.50E+03 | 3.2E-04 | 1.4E+00 | 4.8E-07 | 1.6E-01 |

Reset to Defaults

Soil Gas Concentration Data

| ENTER Chemical CAS No. (numbers only, no dashes) | ENTER Soil gas conc., $C_g$ ($\mu g/m^3$) | OR | ENTER Soil gas conc., $C_g$ (ppmv) | Chemical |
|---|---|---|---|---|
| 79016 | 4.50E+03 | | | Trichloroethylene |

MESSAGE: See VLOOKUP table comments on chemical properties and/or toxicity criteria for this chemical.

MORE ↓

| ENTER Depth below grade to bottom of enclosed space floor, $L_F$ (15 or 200 cm) | ENTER Soil gas sampling depth below grade, $L_s$ (cm) | ENTER Average soil temperature, $T_S$ ($^oC$) | ENTER Vadose zone SCS soil type (used to estimate soil vapor permeability) | OR | ENTER User-defined vadose zone soil vapor permeability, $k_v$ ($cm^2$) |
|---|---|---|---|---|---|
| 15 | 152 | 24 | SIL | | |

MORE ↓

| ENTER Vandose zone SCS soil type (Lookup Soil Parameters) | ENTER Vadose zone soil dry bulk density, $\rho_b^A$ ($g/cm^3$) | ENTER Vadose zone soil total porosity, $n^V$ (unitless) | ENTER Vadose zone soil water-filled porosity, $\theta_w^V$ ($cm^3/cm^3$) | ENTER Average vapor flow rate into bldg. (Leave blank to calculate) $Q_{soil}$ (L/m) |
|---|---|---|---|---|
| SIL | 1.49 | 0.439 | 0.18 | 5 |

MORE ↓

Lookup Receptor Parameters

| | ENTER Averaging time for carcinogens, $AT_C$ (yrs) | ENTER Averaging time for noncarcinogens, $AT_{NC}$ (yrs) | ENTER Exposure duration, ED (yrs) | ENTER Exposure frequency, EF (days/yr) | ENTER Exposure Time ET (hrs/day) | ENTER Air Exchange Rate ACH $(hour)^{-1}$ |
|---|---|---|---|---|---|---|
| NEW=> Commercial | 70 | 25 | 25 | 250 | 8 | 1 |
| | | | | | (NEW) | (NEW) |

END

## Trichloroethylene

| Diffusivity in air, $D_a$ ($cm^2/s$) | Diffusivity in water, $D_w$ ($cm^2/s$) | Henry's law constant at reference temperature, H (atm-$m^3$/mol) | Henry's law constant reference temperature, $T_R$ ($^oC$) | Enthalpy of vaporization at the normal boiling point, $\Delta H_{v,b}$ (cal/mol) | Normal boiling point, $T_B$ ($^oK$) | Critical temperature, $T_C$ ($^oK$) | Unit risk factor, URF ($\mu g/m^3)^{-1}$ | Reference conc., RfC ($mg/m^3$) | Molecular weight, MW (g/mol) |
|---|---|---|---|---|---|---|---|---|---|
| 6.87E-02 | 1.02E-05 | 9.85E-03 | 25 | 7,505 | 360.36 | 544.20 | 4.1E-06 | 2.0E-03 | 131.39 |

**END**

**Scenario:** **Commercial**

**Chemical:** **Trichloroethylene**

| Source-building separation, $L_T$ (cm) | Vadose zone soil air-filled porosity, $\theta_a^V$ ($cm^3/cm^3$) | Vadose zone effective total fluid saturation, $S_{te}$ ($cm^3/cm^3$) | Vadose zone soil intrinsic permeability, $k_i$ ($cm^2$) | Vadose zone soil relative air permeability, $k_{rg}$ ($cm^2$) | Vadose zone soil effective vapor permeability, $k_v$ ($cm^2$) | Floor-wall seam perimeter, $X_{crack}$ (cm) | Soil gas conc. ($\mu g/m^3$) | Bldg. ventilation rate, $Q_{building}$ ($cm^3/s$) |
|---|---|---|---|---|---|---|---|---|
| 137 | 0.259 | 0.307 | 2.89E-09 | 0.798 | 2.30E-09 | 4,000 | 4.50E+03 | 6.78E+04 |

| Area of enclosed space below grade, $A_B$ ($cm^2$) | Crack-to-total area ratio, $\eta$ (unitless) | Crack depth below grade, $Z_{crack}$ (cm) | Enthalpy of vaporization at ave. soil temperature, $\Delta H_{v,TS}$ (cal/mol) | Henry's law constant at ave. soil temperature, $H_{TS}$ (atm-$m^3$/mol) | Henry's law constant at ave. soil temperature, $H'_{TS}$ (unitless) | Vapor viscosity at ave. soil temperature, $\mu_{TS}$ (g/cm-s) | Vadose zone effective diffusion coefficient, $D^{eff}_V$ ($cm^2/s$) | Diffusion path length, $L_d$ (cm) |
|---|---|---|---|---|---|---|---|---|
| 1.00E+06 | 5.00E-03 | 15 | 8,382 | 9.39E-03 | 3.85E-01 | 1.80E-04 | 3.96E-03 | 137 |

| Convection path length, $L_p$ (cm) | Source vapor conc., $C_{source}$ ($\mu g/m^3$) | Crack radius, $r_{crack}$ (cm) | Average vapor flow rate into bldg., $Q_{soil}$ ($cm^3/s$) | Crack effective diffusion coefficient, $D^{crack}$ ($cm^2/s$) | Area of crack, $A_{crack}$ ($cm^2$) | Exponent of equivalent foundation Peclet number, $exp(Pe^f)$ (unitless) | Infinite source indoor attenuation coefficient, $\alpha$ (unitless) | Infinite source bldg. conc., $C_{building}$ ($\mu g/m^3$) |
|---|---|---|---|---|---|---|---|---|
| 15 | 4.50E+03 | 1.25 | 8.33E+01 | 3.96E-03 | 5.00E+03 | 1.82E+18 | **3.17E-04** | 1.43E+00 |

| Unit risk factor, URF $(\mu g/m^3)^{-1}$ | Reference conc., RfC ($mg/m^3$) |
|---|---|
| 4.1E-06 | 2.0E-03 |

**END**

RESULTS SHEET

**Scenario:** **Commercial**
**Chemical:** **Trichloroethylene**

INCREMENTAL RISK CALCULATIONS:

| Incremental risk from vapor intrusion to indoor air, carcinogen (unitless) | Hazard quotient from vapor intrusion to indoor air, noncarcinogen (unitless) |
|---|---|
| **4.8E-07** | **1.6E-01** |

**MESSAGE SUMMARY BELOW:**

**END**

USEPA SG-SCREEN
Version 2.0, 04/2003

DTSC Modification
December 2014

# Department of Toxic Substances Control
# Vapor Intrusion Screening Model - Soil Gas

DATA ENTRY SHEET

**Scenario:** Residential
**Chemical:** Trichloroethylene

| Results Summary | | | | |
|---|---|---|---|---|
| Soil Gas Conc. ($\mu g/m^3$) | Attenuation Factor (unitless) | Indoor Air Conc. ($\mu g/m^3$) | Cancer Risk | Noncancer Hazard |
| 6.60E+03 | 3.2E-04 | 2.1E+00 | 3.1E-06 | 1.0E+00 |

Reset to Defaults

Soil Gas Concentration Data

| ENTER Chemical CAS No. (numbers only, no dashes) | ENTER Soil gas conc., $C_g$ ($\mu g/m^3$) | OR | ENTER Soil gas conc., $C_g$ (ppmv) | Chemical |
|---|---|---|---|---|
| 79016 | 6.60E+03 | | | Trichloroethylene |

MESSAGE: See VLOOKUP table comments on chemical properties and/or toxicity criteria for this chemical.

MORE ↓

| ENTER Depth below grade to bottom of enclosed space floor, $L_F$ (15 or 200 cm) | ENTER Soil gas sampling depth below grade, $L_s$ (cm) | ENTER Average soil temperature, $T_S$ ($^oC$) | ENTER Vadose zone SCS soil type (used to estimate soil vapor permeability) | OR | ENTER User-defined vadose zone soil vapor permeability, $k_v$ ($cm^2$) |
|---|---|---|---|---|---|
| 15 | 335 | 24 | SIL | | |

MORE ↓

| ENTER Vandose zone SCS soil type (Lookup Soil Parameters) | ENTER Vadose zone soil dry bulk density, $\rho_b^A$ ($g/cm^3$) | ENTER Vadose zone soil total porosity, $n^V$ (unitless) | ENTER Vadose zone soil water-filled porosity, $\theta_w^V$ ($cm^3/cm^3$) | ENTER Average vapor flow rate into bldg. (Leave blank to calculate) $Q_{soil}$ (L/m) |
|---|---|---|---|---|
| SIL | 1.49 | 0.439 | 0.18 | 5 |

MORE ↓

Lookup Receptor Parameters

| | ENTER Averaging time for carcinogens, $AT_C$ (yrs) | ENTER Averaging time for noncarcinogens, $AT_{NC}$ (yrs) | ENTER Exposure duration, ED (yrs) | ENTER Exposure frequency, EF (days/yr) | ENTER Exposure Time ET (hrs/day) | ENTER Air Exchange Rate ACH $(hour)^{-1}$ |
|---|---|---|---|---|---|---|
| NEW=> Residential | 70 | 26 | 26 | 350 | 24 (NEW) | 0.5 (NEW) |

END

## Trichloroethylene

| Diffusivity in air, $D_a$ ($cm^2/s$) | Diffusivity in water, $D_w$ ($cm^2/s$) | Henry's law constant at reference temperature, H (atm-$m^3$/mol) | Henry's law constant reference temperature, $T_R$ ($^oC$) | Enthalpy of vaporization at the normal boiling point, $\Delta H_{v,b}$ (cal/mol) | Normal boiling point, $T_B$ ($^oK$) | Critical temperature, $T_C$ ($^oK$) | Unit risk factor, URF ($\mu g/m^3)^{-1}$ | Reference conc., RfC ($mg/m^3$) | Molecular weight, MW (g/mol) |
|---|---|---|---|---|---|---|---|---|---|
| 6.87E-02 | 1.02E-05 | 9.85E-03 | 25 | 7,505 | 360.36 | 544.20 | 4.1E-06 | 2.0E-03 | 131.39 |

**END**

**Scenario:** **Residential**

**Chemical:** **Trichloroethylene**

| Source-building separation, $L_T$ (cm) | Vadose zone soil air-filled porosity, $\theta_a^V$ ($cm^3/cm^3$) | Vadose zone effective total fluid saturation, $S_{te}$ ($cm^3/cm^3$) | Vadose zone soil intrinsic permeability, $k_i$ ($cm^2$) | Vadose zone soil relative air permeability, $k_{rg}$ ($cm^2$) | Vadose zone soil effective vapor permeability, $k_v$ ($cm^2$) | Floor-wall seam perimeter, $X_{crack}$ (cm) | Soil gas conc. ($\mu g/m^3$) | Bldg. ventilation rate, $Q_{building}$ ($cm^3/s$) |
|---|---|---|---|---|---|---|---|---|
| 320 | 0.259 | 0.307 | 2.89E-09 | 0.798 | 2.30E-09 | 4,000 | 6.60E+03 | 3.39E+04 |

| Area of enclosed space below grade, $A_B$ ($cm^2$) | Crack-to-total area ratio, $\eta$ (unitless) | Crack depth below grade, $Z_{crack}$ (cm) | Enthalpy of vaporization at ave. soil temperature, $\Delta H_{v,TS}$ (cal/mol) | Henry's law constant at ave. soil temperature, $H_{TS}$ (atm-$m^3$/mol) | Henry's law constant at ave. soil temperature, $H'_{TS}$ (unitless) | Vapor viscosity at ave. soil temperature, $\mu_{TS}$ (g/cm-s) | Vadose zone effective diffusion coefficient, $D^{eff}_V$ ($cm^2/s$) | Diffusion path length, $L_d$ (cm) |
|---|---|---|---|---|---|---|---|---|
| 1.00E+06 | 5.00E-03 | 15 | 8,382 | 9.39E-03 | 3.85E-01 | 1.80E-04 | 3.96E-03 | 320 |

| Convection path length, $L_p$ (cm) | Source vapor conc., $C_{source}$ ($\mu g/m^3$) | Crack radius, $r_{crack}$ (cm) | Average vapor flow rate into bldg., $Q_{soil}$ ($cm^3/s$) | Crack effective diffusion coefficient, $D^{crack}$ ($cm^2/s$) | Area of crack, $A_{crack}$ ($cm^2$) | Exponent of equivalent foundation Peclet number, $exp(Pe^f)$ (unitless) | Infinite source indoor attenuation coefficient, $\alpha$ (unitless) | Infinite source bldg. conc., $C_{building}$ ($\mu g/m^3$) |
|---|---|---|---|---|---|---|---|---|
| 15 | 6.60E+03 | 1.25 | 8.33E+01 | 3.96E-03 | 5.00E+03 | 1.82E+18 | **3.18E-04** | 2.10E+00 |

| Unit risk factor, URF $(\mu g/m^3)^{-1}$ | Reference conc., RfC ($mg/m^3$) |
|---|---|
| 4.1E-06 | 2.0E-03 |

**END**

**Scenario:** **Residential**
**Chemical:** **Trichloroethylene**

INCREMENTAL RISK CALCULATIONS:

| Incremental risk from vapor intrusion to indoor air, carcinogen (unitless) | Hazard quotient from vapor intrusion to indoor air, noncarcinogen (unitless) |
|---|---|
| **3.1E-06** | **1.0E+00** |

**MESSAGE SUMMARY BELOW:**

**END**

USEPA SG-SCREEN
Version 2.0, 04/2003

DTSC Modification
December 2014

# Department of Toxic Substances Control
# Vapor Intrusion Screening Model - Soil Gas

DATA ENTRY SHEET

**Scenario:** Commercial
**Chemical:** Trichloroethylene

| Results Summary | | | | |
|---|---|---|---|---|
| Soil Gas Conc. ($\mu g/m^3$) | Attenuation Factor (unitless) | Indoor Air Conc. ($\mu g/m^3$) | Cancer Risk | Noncancer Hazard |
| 6.60E+03 | 1.6E-04 | 1.1E+00 | 3.5E-07 | 1.2E-01 |

Reset to Defaults

Soil Gas Concentration Data

| ENTER Chemical CAS No. (numbers only, no dashes) | ENTER Soil gas conc., $C_g$ ($\mu g/m^3$) | OR | ENTER Soil gas conc., $C_g$ (ppmv) | Chemical |
|---|---|---|---|---|
| 79016 | 6.60E+03 | | | Trichloroethylene |

MESSAGE: See VLOOKUP table comments on chemical properties and/or toxicity criteria for this chemical.

MORE ↓

| ENTER Depth below grade to bottom of enclosed space floor, $L_F$ (15 or 200 cm) | ENTER Soil gas sampling depth below grade, $L_s$ (cm) | ENTER Average soil temperature, $T_S$ ($^oC$) | ENTER Vadose zone SCS soil type (used to estimate soil vapor permeability) | OR | ENTER User-defined vadose zone soil vapor permeability, $k_v$ ($cm^2$) |
|---|---|---|---|---|---|
| 15 | 335 | 24 | SIL | | |

MORE ↓

| ENTER Vandose zone SCS soil type (Lookup Soil Parameters) | ENTER Vadose zone soil dry bulk density, $\rho_b^A$ ($g/cm^3$) | ENTER Vadose zone soil total porosity, $n^V$ (unitless) | ENTER Vadose zone soil water-filled porosity, $\theta_w^V$ ($cm^3/cm^3$) | ENTER Average vapor flow rate into bldg. (Leave blank to calculate) $Q_{soil}$ (L/m) |
|---|---|---|---|---|
| SIL | 1.49 | 0.439 | 0.18 | 5 |

MORE ↓

Lookup Receptor Parameters

| | ENTER Averaging time for carcinogens, $AT_C$ (yrs) | ENTER Averaging time for noncarcinogens, $AT_{NC}$ (yrs) | ENTER Exposure duration, ED (yrs) | ENTER Exposure frequency, EF (days/yr) | ENTER Exposure Time ET (hrs/day) | ENTER Air Exchange Rate ACH $(hour)^{-1}$ |
|---|---|---|---|---|---|---|
| NEW=> Commercial | 70 | 25 | 25 | 250 | 8 | 1 |
| | | | | | (NEW) | (NEW) |

END

## Trichloroethylene

| Diffusivity in air, $D_a$ ($cm^2/s$) | Diffusivity in water, $D_w$ ($cm^2/s$) | Henry's law constant at reference temperature, H (atm-$m^3$/mol) | Henry's law constant reference temperature, $T_R$ ($^oC$) | Enthalpy of vaporization at the normal boiling point, $\Delta H_{v,b}$ (cal/mol) | Normal boiling point, $T_B$ ($^oK$) | Critical temperature, $T_C$ ($^oK$) | Unit risk factor, URF ($\mu g/m^3)^{-1}$ | Reference conc., RfC ($mg/m^3$) | Molecular weight, MW (g/mol) |
|---|---|---|---|---|---|---|---|---|---|
| 6.87E-02 | 1.02E-05 | 9.85E-03 | 25 | 7,505 | 360.36 | 544.20 | 4.1E-06 | 2.0E-03 | 131.39 |

**END**

**Scenario:** **Commercial**

**Chemical:** **Trichloroethylene**

| Source-building separation, $L_T$ (cm) | Vadose zone soil air-filled porosity, $\theta_a^V$ ($cm^3/cm^3$) | Vadose zone effective total fluid saturation, $S_{te}$ ($cm^3/cm^3$) | Vadose zone soil intrinsic permeability, $k_i$ ($cm^2$) | Vadose zone soil relative air permeability, $k_{rg}$ ($cm^2$) | Vadose zone soil effective vapor permeability, $k_v$ ($cm^2$) | Floor-wall seam perimeter, $X_{crack}$ (cm) | Soil gas conc. ($\mu g/m^3$) | Bldg. ventilation rate, $Q_{building}$ ($cm^3/s$) |
|---|---|---|---|---|---|---|---|---|
| 320 | 0.259 | 0.307 | 2.89E-09 | 0.798 | 2.30E-09 | 4,000 | 6.60E+03 | 6.78E+04 |

| Area of enclosed space below grade, $A_B$ ($cm^2$) | Crack-to-total area ratio, $\eta$ (unitless) | Crack depth below grade, $Z_{crack}$ (cm) | Enthalpy of vaporization at ave. soil temperature, $\Delta H_{v,TS}$ (cal/mol) | Henry's law constant at ave. soil temperature, $H_{TS}$ (atm-$m^3$/mol) | Henry's law constant at ave. soil temperature, $H'_{TS}$ (unitless) | Vapor viscosity at ave. soil temperature, $\mu_{TS}$ (g/cm-s) | Vadose zone effective diffusion coefficient, $D^{eff}_V$ ($cm^2/s$) | Diffusion path length, $L_d$ (cm) |
|---|---|---|---|---|---|---|---|---|
| 1.00E+06 | 5.00E-03 | 15 | 8,382 | 9.39E-03 | 3.85E-01 | 1.80E-04 | 3.96E-03 | 320 |

| Convection path length, $L_p$ (cm) | Source vapor conc., $C_{source}$ ($\mu g/m^3$) | Crack radius, $r_{crack}$ (cm) | Average vapor flow rate into bldg., $Q_{soil}$ ($cm^3/s$) | Crack effective diffusion coefficient, $D^{crack}$ ($cm^2/s$) | Area of crack, $A_{crack}$ ($cm^2$) | Exponent of equivalent foundation Peclet number, $exp(Pe^f)$ (unitless) | Infinite source indoor attenuation coefficient, $\alpha$ (unitless) | Infinite source bldg. conc., $C_{building}$ ($\mu g/m^3$) |
|---|---|---|---|---|---|---|---|---|
| 15 | 6.60E+03 | 1.25 | 8.33E+01 | 3.96E-03 | 5.00E+03 | 1.82E+18 | **1.59E-04** | 1.05E+00 |

| Unit risk factor, URF $(\mu g/m^3)^{-1}$ | Reference conc., RfC ($mg/m^3$) |
|---|---|
| 4.1E-06 | 2.0E-03 |

**END**

**Scenario:** **Commercial**
**Chemical:** **Trichloroethylene**

INCREMENTAL RISK CALCULATIONS:

| Incremental risk from vapor intrusion to indoor air, carcinogen (unitless) | Hazard quotient from vapor intrusion to indoor air, noncarcinogen (unitless) |
|---|---|
| **3.5E-07** | **1.2E-01** |

**MESSAGE SUMMARY BELOW:**

**END**

USEPA SG-SCREEN
Version 2.0, 04/2003

DTSC Modification
December 2014

# Department of Toxic Substances Control
# Vapor Intrusion Screening Model - Soil Gas

DATA ENTRY SHEET

**Scenario:** Residential
**Chemical:** Trichloroethylene

| Results Summary | | | | |
|---|---|---|---|---|
| Soil Gas Conc. ($\mu g/m^3$) | Attenuation Factor (unitless) | Indoor Air Conc. ($\mu g/m^3$) | Cancer Risk | Noncancer Hazard |
| 2.50E+02 | 6.3E-04 | 1.6E-01 | 2.3E-07 | 7.6E-02 |

Reset to Defaults

Soil Gas Concentration Data

| ENTER Chemical CAS No. (numbers only, no dashes) | ENTER Soil gas conc., $C_g$ ($\mu g/m^3$) | OR | ENTER Soil gas conc., $C_g$ (ppmv) | Chemical |
|---|---|---|---|---|
| 79016 | 2.50E+02 | | | Trichloroethylene |

MESSAGE: See VLOOKUP table comments on chemical properties and/or toxicity criteria for this chemical.

MORE ↓

| ENTER Depth below grade to bottom of enclosed space floor, $L_F$ (15 or 200 cm) | ENTER Soil gas sampling depth below grade, $L_s$ (cm) | ENTER Average soil temperature, $T_S$ ($^oC$) | ENTER Vadose zone SCS soil type (used to estimate soil vapor permeability) | OR | ENTER User-defined vadose zone soil vapor permeability, $k_v$ ($cm^2$) |
|---|---|---|---|---|---|
| 15 | 152 | 24 | SIL | | |

MORE ↓

| ENTER Vandose zone SCS soil type (Lookup Soil Parameters) | ENTER Vadose zone soil dry bulk density, $\rho_b^A$ ($g/cm^3$) | ENTER Vadose zone soil total porosity, $n^V$ (unitless) | ENTER Vadose zone soil water-filled porosity, $\theta_w^V$ ($cm^3/cm^3$) | ENTER Average vapor flow rate into bldg. (Leave blank to calculate) $Q_{soil}$ (L/m) |
|---|---|---|---|---|
| SIL | 1.49 | 0.439 | 0.18 | 5 |

MORE ↓

Lookup Receptor Parameters

| | ENTER Averaging time for carcinogens, $AT_C$ (yrs) | ENTER Averaging time for noncarcinogens, $AT_{NC}$ (yrs) | ENTER Exposure duration, ED (yrs) | ENTER Exposure frequency, EF (days/yr) | ENTER Exposure Time ET (hrs/day) | ENTER Air Exchange Rate ACH $(hour)^{-1}$ |
|---|---|---|---|---|---|---|
| NEW=> Residential | 70 | 26 | 26 | 350 | 24 (NEW) | 0.5 (NEW) |

END

## Trichloroethylene

| Diffusivity in air, $D_a$ ($cm^2/s$) | Diffusivity in water, $D_w$ ($cm^2/s$) | Henry's law constant at reference temperature, H (atm-$m^3$/mol) | Henry's law constant reference temperature, $T_R$ ($^oC$) | Enthalpy of vaporization at the normal boiling point, $\Delta H_{v,b}$ (cal/mol) | Normal boiling point, $T_B$ ($^oK$) | Critical temperature, $T_C$ ($^oK$) | Unit risk factor, URF ($\mu g/m^3)^{-1}$ | Reference conc., RfC ($mg/m^3$) | Molecular weight, MW (g/mol) |
|---|---|---|---|---|---|---|---|---|---|
| 6.87E-02 | 1.02E-05 | 9.85E-03 | 25 | 7,505 | 360.36 | 544.20 | 4.1E-06 | 2.0E-03 | 131.39 |

**END**

**Scenario:** **Residential**

**Chemical:** **Trichloroethylene**

| Source-building separation, $L_T$ (cm) | Vadose zone soil air-filled porosity, $\theta_a^V$ ($cm^3/cm^3$) | Vadose zone effective total fluid saturation, $S_{te}$ ($cm^3/cm^3$) | Vadose zone soil intrinsic permeability, $k_i$ ($cm^2$) | Vadose zone soil relative air permeability, $k_{rg}$ ($cm^2$) | Vadose zone soil effective vapor permeability, $k_v$ ($cm^2$) | Floor-wall seam perimeter, $X_{crack}$ (cm) | Soil gas conc. ($\mu g/m^3$) | Bldg. ventilation rate, $Q_{building}$ ($cm^3/s$) |
|---|---|---|---|---|---|---|---|---|
| 137 | 0.259 | 0.307 | 2.89E-09 | 0.798 | 2.30E-09 | 4,000 | 2.50E+02 | 3.39E+04 |

| Area of enclosed space below grade, $A_B$ ($cm^2$) | Crack-to-total area ratio, $\eta$ (unitless) | Crack depth below grade, $Z_{crack}$ (cm) | Enthalpy of vaporization at ave. soil temperature, $\Delta H_{v,TS}$ (cal/mol) | Henry's law constant at ave. soil temperature, $H_{TS}$ (atm-$m^3$/mol) | Henry's law constant at ave. soil temperature, $H'_{TS}$ (unitless) | Vapor viscosity at ave. soil temperature, $\mu_{TS}$ (g/cm-s) | Vadose zone effective diffusion coefficient, $D^{eff}_V$ ($cm^2/s$) | Diffusion path length, $L_d$ (cm) |
|---|---|---|---|---|---|---|---|---|
| 1.00E+06 | 5.00E-03 | 15 | 8,382 | 9.39E-03 | 3.85E-01 | 1.80E-04 | 3.96E-03 | 137 |

| Convection path length, $L_p$ (cm) | Source vapor conc., $C_{source}$ ($\mu g/m^3$) | Crack radius, $r_{crack}$ (cm) | Average vapor flow rate into bldg., $Q_{soil}$ ($cm^3/s$) | Crack effective diffusion coefficient, $D^{crack}$ ($cm^2/s$) | Area of crack, $A_{crack}$ ($cm^2$) | Exponent of equivalent foundation Peclet number, $exp(Pe^f)$ (unitless) | Infinite source indoor attenuation coefficient, $\alpha$ (unitless) | Infinite source bldg. conc., $C_{building}$ ($\mu g/m^3$) |
|---|---|---|---|---|---|---|---|---|
| 15 | 2.50E+02 | 1.25 | 8.33E+01 | 3.96E-03 | 5.00E+03 | 1.82E+18 | **6.34E-04** | 1.58E-01 |

| Unit risk factor, URF $(\mu g/m^3)^{-1}$ | Reference conc., RfC ($mg/m^3$) |
|---|---|
| 4.1E-06 | 2.0E-03 |

**END**

**Scenario:** **Residential**
**Chemical:** **Trichloroethylene**

INCREMENTAL RISK CALCULATIONS:

| Incremental risk from vapor intrusion to indoor air, carcinogen (unitless) | Hazard quotient from vapor intrusion to indoor air, noncarcinogen (unitless) |
|---|---|
| **2.3E-07** | **7.6E-02** |

**MESSAGE SUMMARY BELOW:**

**END**

USEPA SG-SCREEN
Version 2.0, 04/2003

DTSC Modification
December 2014

# Department of Toxic Substances Control
# Vapor Intrusion Screening Model - Soil Gas

DATA ENTRY SHEET

**Scenario:** Commercial
**Chemical:** Trichloroethylene

| Results Summary | | | | |
|---|---|---|---|---|
| Soil Gas Conc. ($\mu g/m^3$) | Attenuation Factor (unitless) | Indoor Air Conc. ($\mu g/m^3$) | Cancer Risk | Noncancer Hazard |
| 2.50E+02 | 3.2E-04 | 7.9E-02 | 2.6E-08 | 9.0E-03 |

Reset to Defaults

Soil Gas Concentration Data

| ENTER Chemical CAS No. (numbers only, no dashes) | ENTER Soil gas conc., $C_g$ ($\mu g/m^3$) | OR | ENTER Soil gas conc., $C_g$ (ppmv) | Chemical |
|---|---|---|---|---|
| 79016 | 2.50E+02 | | | Trichloroethylene |

MESSAGE: See VLOOKUP table comments on chemical properties and/or toxicity criteria for this chemical.

MORE ↓

| ENTER Depth below grade to bottom of enclosed space floor, $L_F$ (15 or 200 cm) | ENTER Soil gas sampling depth below grade, $L_s$ (cm) | ENTER Average soil temperature, $T_S$ ($^oC$) | ENTER Vadose zone SCS soil type (used to estimate soil vapor permeability) | OR | ENTER User-defined vadose zone soil vapor permeability, $k_v$ ($cm^2$) |
|---|---|---|---|---|---|
| 15 | 152 | 24 | SIL | | |

MORE ↓

| ENTER Vandose zone SCS soil type (Lookup Soil Parameters) | ENTER Vadose zone soil dry bulk density, $\rho_b^A$ ($g/cm^3$) | ENTER Vadose zone soil total porosity, $n^V$ (unitless) | ENTER Vadose zone soil water-filled porosity, $\theta_w^V$ ($cm^3/cm^3$) | ENTER Average vapor flow rate into bldg. (Leave blank to calculate) $Q_{soil}$ (L/m) |
|---|---|---|---|---|
| SIL | 1.49 | 0.439 | 0.18 | 5 |

MORE ↓

Lookup Receptor Parameters

| | ENTER Averaging time for carcinogens, $AT_C$ (yrs) | ENTER Averaging time for noncarcinogens, $AT_{NC}$ (yrs) | ENTER Exposure duration, ED (yrs) | ENTER Exposure frequency, EF (days/yr) | ENTER Exposure Time ET (hrs/day) | ENTER Air Exchange Rate ACH $(hour)^{-1}$ |
|---|---|---|---|---|---|---|
| NEW=> Commercial | 70 | 25 | 25 | 250 | 8 | 1 |
| | | | | | (NEW) | (NEW) |

END

## Trichloroethylene

| Diffusivity in air, $D_a$ ($cm^2/s$) | Diffusivity in water, $D_w$ ($cm^2/s$) | Henry's law constant at reference temperature, H (atm-$m^3$/mol) | Henry's law constant reference temperature, $T_R$ ($^oC$) | Enthalpy of vaporization at the normal boiling point, $\Delta H_{v,b}$ (cal/mol) | Normal boiling point, $T_B$ ($^oK$) | Critical temperature, $T_C$ ($^oK$) | Unit risk factor, URF ($\mu g/m^3)^{-1}$ | Reference conc., RfC ($mg/m^3$) | Molecular weight, MW (g/mol) |
|---|---|---|---|---|---|---|---|---|---|
| 6.87E-02 | 1.02E-05 | 9.85E-03 | 25 | 7,505 | 360.36 | 544.20 | 4.1E-06 | 2.0E-03 | 131.39 |

**END**

**Scenario:** **Commercial**

**Chemical:** **Trichloroethylene**

| Source-building separation, $L_T$ (cm) | Vadose zone soil air-filled porosity, $\theta_a^V$ ($cm^3/cm^3$) | Vadose zone effective total fluid saturation, $S_{te}$ ($cm^3/cm^3$) | Vadose zone soil intrinsic permeability, $k_i$ ($cm^2$) | Vadose zone soil relative air permeability, $k_{rg}$ ($cm^2$) | Vadose zone soil effective vapor permeability, $k_v$ ($cm^2$) | Floor-wall seam perimeter, $X_{crack}$ (cm) | Soil gas conc. ($\mu g/m^3$) | Bldg. ventilation rate, $Q_{building}$ ($cm^3/s$) |
|---|---|---|---|---|---|---|---|---|
| 137 | 0.259 | 0.307 | 2.89E-09 | 0.798 | 2.30E-09 | 4,000 | 2.50E+02 | 6.78E+04 |

| Area of enclosed space below grade, $A_B$ ($cm^2$) | Crack-to-total area ratio, $\eta$ (unitless) | Crack depth below grade, $Z_{crack}$ (cm) | Enthalpy of vaporization at ave. soil temperature, $\Delta H_{v,TS}$ (cal/mol) | Henry's law constant at ave. soil temperature, $H_{TS}$ (atm-$m^3$/mol) | Henry's law constant at ave. soil temperature, $H'_{TS}$ (unitless) | Vapor viscosity at ave. soil temperature, $\mu_{TS}$ (g/cm-s) | Vadose zone effective diffusion coefficient, $D^{eff}_V$ ($cm^2/s$) | Diffusion path length, $L_d$ (cm) |
|---|---|---|---|---|---|---|---|---|
| 1.00E+06 | 5.00E-03 | 15 | 8,382 | 9.39E-03 | 3.85E-01 | 1.80E-04 | 3.96E-03 | 137 |

| Convection path length, $L_p$ (cm) | Source vapor conc., $C_{source}$ ($\mu g/m^3$) | Crack radius, $r_{crack}$ (cm) | Average vapor flow rate into bldg., $Q_{soil}$ ($cm^3/s$) | Crack effective diffusion coefficient, $D^{crack}$ ($cm^2/s$) | Area of crack, $A_{crack}$ ($cm^2$) | Exponent of equivalent foundation Peclet number, $exp(Pe^f)$ (unitless) | Infinite source indoor attenuation coefficient, $\alpha$ (unitless) | Infinite source bldg. conc., $C_{building}$ ($\mu g/m^3$) |
|---|---|---|---|---|---|---|---|---|
| 15 | 2.50E+02 | 1.25 | 8.33E+01 | 3.96E-03 | 5.00E+03 | 1.82E+18 | **3.17E-04** | 7.92E-02 |

| Unit risk factor, URF $(\mu g/m^3)^{-1}$ | Reference conc., RfC ($mg/m^3$) |
|---|---|
| 4.1E-06 | 2.0E-03 |

**END**

**Scenario:** **Commercial**
**Chemical:** **Trichloroethylene**

INCREMENTAL RISK CALCULATIONS:

| Incremental risk from vapor intrusion to indoor air, carcinogen (unitless) | Hazard quotient from vapor intrusion to indoor air, noncarcinogen (unitless) |
|---|---|
| **2.6E-08** | **9.0E-03** |

**MESSAGE SUMMARY BELOW:**

**END**

USEPA SG-SCREEN
Version 2.0, 04/2003

DTSC Modification
December 2014

# Department of Toxic Substances Control
# Vapor Intrusion Screening Model - Soil Gas

DATA ENTRY SHEET

**Scenario:** Residential
**Chemical:** Trichloroethylene

| Results Summary | | | | |
|---|---|---|---|---|
| Soil Gas Conc. ($\mu g/m^3$) | Attenuation Factor (unitless) | Indoor Air Conc. ($\mu g/m^3$) | Cancer Risk | Noncancer Hazard |
| 8.70E+02 | 3.2E-04 | 2.8E-01 | 4.0E-07 | 1.3E-01 |

Reset to Defaults

Soil Gas Concentration Data

| ENTER Chemical CAS No. (numbers only, no dashes) | ENTER Soil gas conc., $C_g$ ($\mu g/m^3$) | OR | ENTER Soil gas conc., $C_g$ (ppmv) | Chemical |
|---|---|---|---|---|
| 79016 | 8.70E+02 | | | Trichloroethylene |

MESSAGE: See VLOOKUP table comments on chemical properties and/or toxicity criteria for this chemical.

MORE ↓

| ENTER Depth below grade to bottom of enclosed space floor, $L_F$ (15 or 200 cm) | ENTER Soil gas sampling depth below grade, $L_s$ (cm) | ENTER Average soil temperature, $T_S$ ($^oC$) | ENTER Vadose zone SCS soil type (used to estimate soil vapor permeability) | OR | ENTER User-defined vadose zone soil vapor permeability, $k_v$ ($cm^2$) |
|---|---|---|---|---|---|
| 15 | 335 | 24 | SIL | | |

MORE ↓

| ENTER Vandose zone SCS soil type (Lookup Soil Parameters) | ENTER Vadose zone soil dry bulk density, $\rho_b^A$ ($g/cm^3$) | ENTER Vadose zone soil total porosity, $n^V$ (unitless) | ENTER Vadose zone soil water-filled porosity, $\theta_w^V$ ($cm^3/cm^3$) | ENTER Average vapor flow rate into bldg. (Leave blank to calculate) $Q_{soil}$ (L/m) |
|---|---|---|---|---|
| SIL | 1.49 | 0.439 | 0.18 | 5 |

MORE ↓

Lookup Receptor Parameters

| | ENTER Averaging time for carcinogens, $AT_C$ (yrs) | ENTER Averaging time for noncarcinogens, $AT_{NC}$ (yrs) | ENTER Exposure duration, ED (yrs) | ENTER Exposure frequency, EF (days/yr) | ENTER Exposure Time ET (hrs/day) | ENTER Air Exchange Rate ACH $(hour)^{-1}$ |
|---|---|---|---|---|---|---|
| NEW=> Residential | 70 | 26 | 26 | 350 | 24 (NEW) | 0.5 (NEW) |

END

## Trichloroethylene

| Diffusivity in air, $D_a$ ($cm^2/s$) | Diffusivity in water, $D_w$ ($cm^2/s$) | Henry's law constant at reference temperature, H (atm-$m^3$/mol) | Henry's law constant reference temperature, $T_R$ ($^oC$) | Enthalpy of vaporization at the normal boiling point, $\Delta H_{v,b}$ (cal/mol) | Normal boiling point, $T_B$ ($^oK$) | Critical temperature, $T_C$ ($^oK$) | Unit risk factor, URF ($\mu g/m^3)^{-1}$ | Reference conc., RfC ($mg/m^3$) | Molecular weight, MW (g/mol) |
|---|---|---|---|---|---|---|---|---|---|
| 6.87E-02 | 1.02E-05 | 9.85E-03 | 25 | 7,505 | 360.36 | 544.20 | 4.1E-06 | 2.0E-03 | 131.39 |

**END**

**Scenario:** **Residential**

**Chemical:** **Trichloroethylene**

| Source-building separation, $L_T$ (cm) | Vadose zone soil air-filled porosity, $\theta_a^V$ ($cm^3/cm^3$) | Vadose zone effective total fluid saturation, $S_{te}$ ($cm^3/cm^3$) | Vadose zone soil intrinsic permeability, $k_i$ ($cm^2$) | Vadose zone soil relative air permeability, $k_{rg}$ ($cm^2$) | Vadose zone soil effective vapor permeability, $k_v$ ($cm^2$) | Floor-wall seam perimeter, $X_{crack}$ (cm) | Soil gas conc. ($\mu g/m^3$) | Bldg. ventilation rate, $Q_{building}$ ($cm^3/s$) |
|---|---|---|---|---|---|---|---|---|
| 320 | 0.259 | 0.307 | 2.89E-09 | 0.798 | 2.30E-09 | 4,000 | 8.70E+02 | 3.39E+04 |

| Area of enclosed space below grade, $A_B$ ($cm^2$) | Crack-to-total area ratio, $\eta$ (unitless) | Crack depth below grade, $Z_{crack}$ (cm) | Enthalpy of vaporization at ave. soil temperature, $\Delta H_{v,TS}$ (cal/mol) | Henry's law constant at ave. soil temperature, $H_{TS}$ (atm-$m^3$/mol) | Henry's law constant at ave. soil temperature, $H'_{TS}$ (unitless) | Vapor viscosity at ave. soil temperature, $\mu_{TS}$ (g/cm-s) | Vadose zone effective diffusion coefficient, $D^{eff}_V$ ($cm^2/s$) | Diffusion path length, $L_d$ (cm) |
|---|---|---|---|---|---|---|---|---|
| 1.00E+06 | 5.00E-03 | 15 | 8,382 | 9.39E-03 | 3.85E-01 | 1.80E-04 | 3.96E-03 | 320 |

| Convection path length, $L_p$ (cm) | Source vapor conc., $C_{source}$ ($\mu g/m^3$) | Crack radius, $r_{crack}$ (cm) | Average vapor flow rate into bldg., $Q_{soil}$ ($cm^3/s$) | Crack effective diffusion coefficient, $D^{crack}$ ($cm^2/s$) | Area of crack, $A_{crack}$ ($cm^2$) | Exponent of equivalent foundation Peclet number, $exp(Pe^f)$ (unitless) | Infinite source indoor attenuation coefficient, $\alpha$ (unitless) | Infinite source bldg. conc., $C_{building}$ ($\mu g/m^3$) |
|---|---|---|---|---|---|---|---|---|
| 15 | 8.70E+02 | 1.25 | 8.33E+01 | 3.96E-03 | 5.00E+03 | 1.82E+18 | **3.18E-04** | 2.77E-01 |

| Unit risk factor, URF $(\mu g/m^3)^{-1}$ | Reference conc., RfC ($mg/m^3$) |
|---|---|
| 4.1E-06 | 2.0E-03 |

**END**

**Scenario:** **Residential**
**Chemical:** **Trichloroethylene**

INCREMENTAL RISK CALCULATIONS:

| Incremental risk from vapor intrusion to indoor air, carcinogen (unitless) | Hazard quotient from vapor intrusion to indoor air, noncarcinogen (unitless) |
|---|---|
| **4.0E-07** | **1.3E-01** |

**MESSAGE SUMMARY BELOW:**

**END**

USEPA SG-SCREEN
Version 2.0, 04/2003

DTSC Modification
December 2014

# Department of Toxic Substances Control
# Vapor Intrusion Screening Model - Soil Gas

DATA ENTRY SHEET

**Scenario:** Commercial
**Chemical:** Trichloroethylene

| Results Summary | | | | |
|---|---|---|---|---|
| Soil Gas Conc. ($\mu g/m^3$) | Attenuation Factor (unitless) | Indoor Air Conc. ($\mu g/m^3$) | Cancer Risk | Noncancer Hazard |
| 8.70E+02 | 1.6E-04 | 1.4E-01 | 4.6E-08 | 1.6E-02 |

Reset to Defaults

Soil Gas Concentration Data

| ENTER Chemical CAS No. (numbers only, no dashes) | ENTER Soil gas conc., $C_g$ ($\mu g/m^3$) | OR | ENTER Soil gas conc., $C_g$ (ppmv) | Chemical |
|---|---|---|---|---|
| 79016 | 8.70E+02 | | | Trichloroethylene |

MESSAGE: See VLOOKUP table comments on chemical properties and/or toxicity criteria for this chemical.

MORE ↓

| ENTER Depth below grade to bottom of enclosed space floor, $L_F$ (15 or 200 cm) | ENTER Soil gas sampling depth below grade, $L_s$ (cm) | ENTER Average soil temperature, $T_S$ ($^oC$) | ENTER Vadose zone SCS soil type (used to estimate soil vapor permeability) | OR | ENTER User-defined vadose zone soil vapor permeability, $k_v$ ($cm^2$) |
|---|---|---|---|---|---|
| 15 | 335 | 24 | SIL | | |

MORE ↓

| ENTER Vandose zone SCS soil type (Lookup Soil Parameters) | ENTER Vadose zone soil dry bulk density, $\rho_b^A$ ($g/cm^3$) | ENTER Vadose zone soil total porosity, $n^V$ (unitless) | ENTER Vadose zone soil water-filled porosity, $\theta_w^V$ ($cm^3/cm^3$) | ENTER Average vapor flow rate into bldg. (Leave blank to calculate) $Q_{soil}$ (L/m) |
|---|---|---|---|---|
| SIL | 1.49 | 0.439 | 0.18 | 5 |

MORE ↓

Lookup Receptor Parameters

| | ENTER Averaging time for carcinogens, $AT_C$ (yrs) | ENTER Averaging time for noncarcinogens, $AT_{NC}$ (yrs) | ENTER Exposure duration, ED (yrs) | ENTER Exposure frequency, EF (days/yr) | ENTER Exposure Time ET (hrs/day) | ENTER Air Exchange Rate ACH $(hour)^{-1}$ |
|---|---|---|---|---|---|---|
| NEW=> Commercial | 70 | 25 | 25 | 250 | 8 | 1 |
| | | | | | (NEW) | (NEW) |

END

## Trichloroethylene

| Diffusivity in air, $D_a$ ($cm^2/s$) | Diffusivity in water, $D_w$ ($cm^2/s$) | Henry's law constant at reference temperature, H (atm-$m^3$/mol) | Henry's law constant reference temperature, $T_R$ ($^oC$) | Enthalpy of vaporization at the normal boiling point, $\Delta H_{v,b}$ (cal/mol) | Normal boiling point, $T_B$ ($^oK$) | Critical temperature, $T_C$ ($^oK$) | Unit risk factor, URF ($\mu g/m^3)^{-1}$ | Reference conc., RfC ($mg/m^3$) | Molecular weight, MW (g/mol) |
|---|---|---|---|---|---|---|---|---|---|
| 6.87E-02 | 1.02E-05 | 9.85E-03 | 25 | 7,505 | 360.36 | 544.20 | 4.1E-06 | 2.0E-03 | 131.39 |

**END**

INTERMEDIATE CALCULATIONS SHEET

**Scenario:** **Commercial**

**Chemical:** **Trichloroethylene**

| Source-building separation, $L_T$ (cm) | Vadose zone soil air-filled porosity, $\theta_a^V$ ($cm^3/cm^3$) | Vadose zone effective total fluid saturation, $S_{te}$ ($cm^3/cm^3$) | Vadose zone soil intrinsic permeability, $k_i$ ($cm^2$) | Vadose zone soil relative air permeability, $k_{rg}$ ($cm^2$) | Vadose zone soil effective vapor permeability, $k_v$ ($cm^2$) | Floor-wall seam perimeter, $X_{crack}$ (cm) | Soil gas conc. ($\mu g/m^3$) | Bldg. ventilation rate, $Q_{building}$ ($cm^3/s$) |
|---|---|---|---|---|---|---|---|---|
| 320 | 0.259 | 0.307 | 2.89E-09 | 0.798 | 2.30E-09 | 4,000 | 8.70E+02 | 6.78E+04 |

| Area of enclosed space below grade, $A_B$ ($cm^2$) | Crack-to-total area ratio, $\eta$ (unitless) | Crack depth below grade, $Z_{crack}$ (cm) | Enthalpy of vaporization at ave. soil temperature, $\Delta H_{v,TS}$ (cal/mol) | Henry's law constant at ave. soil temperature, $H_{TS}$ (atm-$m^3$/mol) | Henry's law constant at ave. soil temperature, $H'_{TS}$ (unitless) | Vapor viscosity at ave. soil temperature, $\mu_{TS}$ (g/cm-s) | Vadose zone effective diffusion coefficient, $D^{eff}_V$ ($cm^2/s$) | Diffusion path length, $L_d$ (cm) |
|---|---|---|---|---|---|---|---|---|
| 1.00E+06 | 5.00E-03 | 15 | 8,382 | 9.39E-03 | 3.85E-01 | 1.80E-04 | 3.96E-03 | 320 |

| Convection path length, $L_p$ (cm) | Source vapor conc., $C_{source}$ ($\mu g/m^3$) | Crack radius, $r_{crack}$ (cm) | Average vapor flow rate into bldg., $Q_{soil}$ ($cm^3/s$) | Crack effective diffusion coefficient, $D^{crack}$ ($cm^2/s$) | Area of crack, $A_{crack}$ ($cm^2$) | Exponent of equivalent foundation Peclet number, $exp(Pe^f)$ (unitless) | Infinite source indoor attenuation coefficient, $\alpha$ (unitless) | Infinite source bldg. conc., $C_{building}$ ($\mu g/m^3$) |
|---|---|---|---|---|---|---|---|---|
| 15 | 8.70E+02 | 1.25 | 8.33E+01 | 3.96E-03 | 5.00E+03 | 1.82E+18 | **1.59E-04** | 1.38E-01 |

| Unit risk factor, URF $(\mu g/m^3)^{-1}$ | Reference conc., RfC ($mg/m^3$) |
|---|---|
| 4.1E-06 | 2.0E-03 |

**END**

**Scenario:** **Commercial**
**Chemical:** **Trichloroethylene**

INCREMENTAL RISK CALCULATIONS:

| Incremental risk from vapor intrusion to indoor air, carcinogen (unitless) | Hazard quotient from vapor intrusion to indoor air, noncarcinogen (unitless) |
|---|---|
| **4.6E-08** | **1.6E-02** |

**MESSAGE SUMMARY BELOW:**

**END**

USEPA SG-SCREEN
Version 2.0, 04/2003

DTSC Modification
December 2014

# Department of Toxic Substances Control
# Vapor Intrusion Screening Model - Soil Gas

DATA ENTRY SHEET

**Scenario:** Residential
**Chemical:** Tetrahydrofuran

| Results Summary | | | | |
|---|---|---|---|---|
| Soil Gas Conc. ($\mu g/m^3$) | Attenuation Factor (unitless) | Indoor Air Conc. ($\mu g/m^3$) | Cancer Risk | Noncancer Hazard |
| 1.00E+01 | 8.1E-04 | 8.1E-03 | NA | 3.9E-06 |

Reset to Defaults

Soil Gas Concentration Data

| ENTER Chemical CAS No. (numbers only, no dashes) | ENTER Soil gas conc., $C_g$ ($\mu g/m^3$) | OR | ENTER Soil gas conc., $C_g$ (ppmv) | Chemical |
|---|---|---|---|---|
| 109999 | 1.00E+01 | | | Tetrahydrofuran |

MESSAGE: See VLOOKUP table comments on chemical properties and/or toxicity criteria for this chemical.

MORE ↓

| ENTER Depth below grade to bottom of enclosed space floor, $L_F$ (15 or 200 cm) | ENTER Soil gas sampling depth below grade, $L_s$ (cm) | ENTER Average soil temperature, $T_S$ ($^oC$) | ENTER Vadose zone SCS soil type (used to estimate soil vapor permeability) | OR | ENTER User-defined vadose zone soil vapor permeability, $k_v$ ($cm^2$) |
|---|---|---|---|---|---|
| 15 | 152 | 24 | SIL | | |

MORE ↓

| ENTER Vandose zone SCS soil type (Lookup Soil Parameters) | ENTER Vadose zone soil dry bulk density, $\rho_b^A$ ($g/cm^3$) | ENTER Vadose zone soil total porosity, $n^V$ (unitless) | ENTER Vadose zone soil water-filled porosity, $\theta_w^V$ ($cm^3/cm^3$) | ENTER Average vapor flow rate into bldg. (Leave blank to calculate) $Q_{soil}$ (L/m) |
|---|---|---|---|---|
| SIL | 1.49 | 0.439 | 0.18 | 5 |

MORE ↓

Lookup Receptor Parameters

| | ENTER Averaging time for carcinogens, $AT_C$ (yrs) | ENTER Averaging time for noncarcinogens, $AT_{NC}$ (yrs) | ENTER Exposure duration, ED (yrs) | ENTER Exposure frequency, EF (days/yr) | ENTER Exposure Time ET (hrs/day) | ENTER Air Exchange Rate ACH $(hour)^{-1}$ |
|---|---|---|---|---|---|---|
| NEW=> Residential | 70 | 26 | 26 | 350 | 24 | 0.5 |
| | | | | | (NEW) | (NEW) |

END

## Tetrahydrofuran

| Diffusivity in air, $D_a$ ($cm^2/s$) | Diffusivity in water, $D_w$ ($cm^2/s$) | Henry's law constant at reference temperature, H (atm-$m^3$/mol) | Henry's law constant reference temperature, $T_R$ ($^oC$) | Enthalpy of vaporization at the normal boiling point, $\Delta H_{v,b}$ (cal/mol) | Normal boiling point, $T_B$ ($^oK$) | Critical temperature, $T_C$ ($^oK$) | Unit risk factor, URF ($\mu g/m^3)^{-1}$ | Reference conc., RfC ($mg/m^3$) | Molecular weight, MW (g/mol) |
|---|---|---|---|---|---|---|---|---|---|
| 9.54E-02 | 1.08E-05 | 7.05E-05 | 25 | 7,074 | 339.00 | 541.00 | 0.0E+00 | 2.0E+00 | 72.11 |

**END**

INTERMEDIATE CALCULATIONS SHEET

**Scenario:** **Residential**

**Chemical:** **Tetrahydrofuran**

| Source-building separation, $L_T$ (cm) | Vadose zone soil air-filled porosity, $\theta_a^V$ ($cm^3/cm^3$) | Vadose zone effective total fluid saturation, $S_{te}$ ($cm^3/cm^3$) | Vadose zone soil intrinsic permeability, $k_i$ ($cm^2$) | Vadose zone soil relative air permeability, $k_{rg}$ ($cm^2$) | Vadose zone soil effective vapor permeability, $k_v$ ($cm^2$) | Floor-wall seam perimeter, $X_{crack}$ (cm) | Soil gas conc. ($\mu g/m^3$) | Bldg. ventilation rate, $Q_{building}$ ($cm^3/s$) |
|---|---|---|---|---|---|---|---|---|
| 137 | 0.259 | 0.307 | 2.89E-09 | 0.798 | 2.30E-09 | 4,000 | 1.00E+01 | 3.39E+04 |

| Area of enclosed space below grade, $A_B$ ($cm^2$) | Crack-to-total area ratio, $\eta$ (unitless) | Crack depth below grade, $Z_{crack}$ (cm) | Enthalpy of vaporization at ave. soil temperature, $\Delta H_{v,TS}$ (cal/mol) | Henry's law constant at ave. soil temperature, $H_{TS}$ (atm-$m^3$/mol) | Henry's law constant at ave. soil temperature, $H'_{TS}$ (unitless) | Vapor viscosity at ave. soil temperature, $\mu_{TS}$ (g/cm-s) | Vadose zone effective diffusion coefficient, $D^{eff}_V$ ($cm^2/s$) | Diffusion path length, $L_d$ (cm) |
|---|---|---|---|---|---|---|---|---|
| 1.00E+06 | 5.00E-03 | 15 | 7,553 | 6.75E-05 | 2.77E-03 | 1.80E-04 | 5.57E-03 | 137 |

| Convection path length, $L_p$ (cm) | Source vapor conc., $C_{source}$ ($\mu g/m^3$) | Crack radius, $r_{crack}$ (cm) | Average vapor flow rate into bldg., $Q_{soil}$ ($cm^3/s$) | Crack effective diffusion coefficient, $D^{crack}$ ($cm^2/s$) | Area of crack, $A_{crack}$ ($cm^2$) | Exponent of equivalent foundation Peclet number, $exp(Pe^f)$ (unitless) | Infinite source indoor attenuation coefficient, $\alpha$ (unitless) | Infinite source bldg. conc., $C_{building}$ ($\mu g/m^3$) |
|---|---|---|---|---|---|---|---|---|
| 15 | 1.00E+01 | 1.25 | 8.33E+01 | 5.57E-03 | 5.00E+03 | 9.64E+12 | **8.07E-04** | 8.07E-03 |

| Unit risk factor, URF $(\mu g/m^3)^{-1}$ | Reference conc., RfC ($mg/m^3$) |
|---|---|
| NA | 2.0E+00 |

**END**

**Scenario:** **Residential**
**Chemical:** **Tetrahydrofuran**

INCREMENTAL RISK CALCULATIONS:

| Incremental risk from vapor intrusion to indoor air, carcinogen (unitless) | Hazard quotient from vapor intrusion to indoor air, noncarcinogen (unitless) |
|---|---|
| **NA** | **3.9E-06** |

**MESSAGE SUMMARY BELOW:**

**END**

USEPA SG-SCREEN
Version 2.0, 04/2003

DTSC Modification
December 2014

# Department of Toxic Substances Control
# Vapor Intrusion Screening Model - Soil Gas

DATA ENTRY SHEET

**Scenario:** Commercial
**Chemical:** Tetrahydrofuran

| Results Summary | | | | |
|---|---|---|---|---|
| Soil Gas Conc. ($\mu g/m^3$) | Attenuation Factor (unitless) | Indoor Air Conc. ($\mu g/m^3$) | Cancer Risk | Noncancer Hazard |
| 1.00E+01 | 4.0E-04 | 4.0E-03 | NA | 4.6E-07 |

Reset to Defaults

Soil Gas Concentration Data

| ENTER Chemical CAS No. (numbers only, no dashes) | ENTER Soil gas conc., $C_g$ ($\mu g/m^3$) | OR | ENTER Soil gas conc., $C_g$ (ppmv) | Chemical |
|---|---|---|---|---|
| 109999 | 1.00E+01 | | | Tetrahydrofuran |

MESSAGE: See VLOOKUP table comments on chemical properties and/or toxicity criteria for this chemical.

MORE ↓

| ENTER Depth below grade to bottom of enclosed space floor, $L_F$ (15 or 200 cm) | ENTER Soil gas sampling depth below grade, $L_s$ (cm) | ENTER Average soil temperature, $T_S$ ($^oC$) | ENTER Vadose zone SCS soil type (used to estimate soil vapor permeability) | OR | ENTER User-defined vadose zone soil vapor permeability, $k_v$ ($cm^2$) |
|---|---|---|---|---|---|
| 15 | 152 | 24 | SIL | | |

MORE ↓

| ENTER Vandose zone SCS soil type (Lookup Soil Parameters) | ENTER Vadose zone soil dry bulk density, $\rho_b^A$ ($g/cm^3$) | ENTER Vadose zone soil total porosity, $n^V$ (unitless) | ENTER Vadose zone soil water-filled porosity, $\theta_w^V$ ($cm^3/cm^3$) | ENTER Average vapor flow rate into bldg. (Leave blank to calculate) $Q_{soil}$ (L/m) |
|---|---|---|---|---|
| SIL | 1.49 | 0.439 | 0.18 | 5 |

MORE ↓

Lookup Receptor Parameters

| | ENTER Averaging time for carcinogens, $AT_C$ (yrs) | ENTER Averaging time for noncarcinogens, $AT_{NC}$ (yrs) | ENTER Exposure duration, ED (yrs) | ENTER Exposure frequency, EF (days/yr) | ENTER Exposure Time ET (hrs/day) | ENTER Air Exchange Rate ACH $(hour)^{-1}$ |
|---|---|---|---|---|---|---|
| NEW=> Commercial | 70 | 25 | 25 | 250 | 8 | 1 |
| | | | | | (NEW) | (NEW) |

END

## Tetrahydrofuran

| Diffusivity in air, $D_a$ ($cm^2/s$) | Diffusivity in water, $D_w$ ($cm^2/s$) | Henry's law constant at reference temperature, H (atm-$m^3$/mol) | Henry's law constant reference temperature, $T_R$ ($^oC$) | Enthalpy of vaporization at the normal boiling point, $\Delta H_{v,b}$ (cal/mol) | Normal boiling point, $T_B$ ($^oK$) | Critical temperature, $T_C$ ($^oK$) | Unit risk factor, URF ($\mu g/m^3)^{-1}$ | Reference conc., RfC ($mg/m^3$) | Molecular weight, MW (g/mol) |
|---|---|---|---|---|---|---|---|---|---|
| 9.54E-02 | 1.08E-05 | 7.05E-05 | 25 | 7,074 | 339.00 | 541.00 | 0.0E+00 | 2.0E+00 | 72.11 |

**END**

**Scenario:** **Commercial**

**Chemical:** **Tetrahydrofuran**

| Source-building separation, $L_T$ (cm) | Vadose zone soil air-filled porosity, $\theta_a^V$ ($cm^3/cm^3$) | Vadose zone effective total fluid saturation, $S_{te}$ ($cm^3/cm^3$) | Vadose zone soil intrinsic permeability, $k_i$ ($cm^2$) | Vadose zone soil relative air permeability, $k_{rg}$ ($cm^2$) | Vadose zone soil effective vapor permeability, $k_v$ ($cm^2$) | Floor-wall seam perimeter, $X_{crack}$ (cm) | Soil gas conc. ($\mu g/m^3$) | Bldg. ventilation rate, $Q_{building}$ ($cm^3/s$) |
|---|---|---|---|---|---|---|---|---|
| 137 | 0.259 | 0.307 | 2.89E-09 | 0.798 | 2.30E-09 | 4,000 | 1.00E+01 | 6.78E+04 |

| Area of enclosed space below grade, $A_B$ ($cm^2$) | Crack-to-total area ratio, $\eta$ (unitless) | Crack depth below grade, $Z_{crack}$ (cm) | Enthalpy of vaporization at ave. soil temperature, $\Delta H_{v,TS}$ (cal/mol) | Henry's law constant at ave. soil temperature, $H_{TS}$ (atm-$m^3$/mol) | Henry's law constant at ave. soil temperature, $H'_{TS}$ (unitless) | Vapor viscosity at ave. soil temperature, $\mu_{TS}$ (g/cm-s) | Vadose zone effective diffusion coefficient, $D^{eff}_V$ ($cm^2/s$) | Diffusion path length, $L_d$ (cm) |
|---|---|---|---|---|---|---|---|---|
| 1.00E+06 | 5.00E-03 | 15 | 7,553 | 6.75E-05 | 2.77E-03 | 1.80E-04 | 5.57E-03 | 137 |

| Convection path length, $L_p$ (cm) | Source vapor conc., $C_{source}$ ($\mu g/m^3$) | Crack radius, $r_{crack}$ (cm) | Average vapor flow rate into bldg., $Q_{soil}$ ($cm^3/s$) | Crack effective diffusion coefficient, $D^{crack}$ ($cm^2/s$) | Area of crack, $A_{crack}$ ($cm^2$) | Exponent of equivalent foundation Peclet number, $exp(Pe^f)$ (unitless) | Infinite source indoor attenuation coefficient, $\alpha$ (unitless) | Infinite source bldg. conc., $C_{building}$ ($\mu g/m^3$) |
|---|---|---|---|---|---|---|---|---|
| 15 | 1.00E+01 | 1.25 | 8.33E+01 | 5.57E-03 | 5.00E+03 | 9.64E+12 | **4.03E-04** | 4.03E-03 |

| Unit risk factor, URF $(\mu g/m^3)^{-1}$ | Reference conc., RfC ($mg/m^3$) |
|---|---|
| NA | 2.0E+00 |

**END**

**Scenario:** **Commercial**
**Chemical:** **Tetrahydrofuran**

INCREMENTAL RISK CALCULATIONS:

| Incremental risk from vapor intrusion to indoor air, carcinogen (unitless) | Hazard quotient from vapor intrusion to indoor air, noncarcinogen (unitless) |
|---|---|
| **NA** | **4.6E-07** |

**MESSAGE SUMMARY BELOW:**

**END**

USEPA SG-SCREEN
Version 2.0, 04/2003

DTSC Modification
December 2014

# Department of Toxic Substances Control
# Vapor Intrusion Screening Model - Soil Gas

DATA ENTRY SHEET

**Scenario:** Residential
**Chemical:** Tetrahydrofuran

| Results Summary | | | | |
|---|---|---|---|---|
| Soil Gas Conc. ($\mu g/m^3$) | Attenuation Factor (unitless) | Indoor Air Conc. ($\mu g/m^3$) | Cancer Risk | Noncancer Hazard |
| 2.10E+01 | 1.7E-04 | 3.6E-03 | NA | 1.7E-06 |

Reset to Defaults

Soil Gas Concentration Data

| ENTER Chemical CAS No. (numbers only, no dashes) | ENTER Soil gas conc., $C_g$ ($\mu g/m^3$) | OR | ENTER Soil gas conc., $C_g$ (ppmv) | Chemical |
|---|---|---|---|---|
| 109999 | 2.10E+01 | | | Tetrahydrofuran |

MESSAGE: See VLOOKUP table comments on chemical properties and/or toxicity criteria for this chemical.

MORE ↓

| ENTER Depth below grade to bottom of enclosed space floor, $L_F$ (15 or 200 cm) | ENTER Soil gas sampling depth below grade, $L_s$ (cm) | ENTER Average soil temperature, $T_S$ ($^oC$) | ENTER Vadose zone SCS soil type (used to estimate soil vapor permeability) | OR | ENTER User-defined vadose zone soil vapor permeability, $k_v$ ($cm^2$) |
|---|---|---|---|---|---|
| 15 | 914 | 24 | SIL | | |

MORE ↓

| ENTER Vandose zone SCS soil type (Lookup Soil Parameters) | ENTER Vadose zone soil dry bulk density, $\rho_b^A$ ($g/cm^3$) | ENTER Vadose zone soil total porosity, $n^V$ (unitless) | ENTER Vadose zone soil water-filled porosity, $\theta_w^V$ ($cm^3/cm^3$) | ENTER Average vapor flow rate into bldg. (Leave blank to calculate) $Q_{soil}$ (L/m) |
|---|---|---|---|---|
| SIL | 1.49 | 0.439 | 0.18 | 5 |

MORE ↓

Lookup Receptor Parameters

| | ENTER Averaging time for carcinogens, $AT_C$ (yrs) | ENTER Averaging time for noncarcinogens, $AT_{NC}$ (yrs) | ENTER Exposure duration, ED (yrs) | ENTER Exposure frequency, EF (days/yr) | ENTER Exposure Time ET (hrs/day) | ENTER Air Exchange Rate ACH $(hour)^{-1}$ |
|---|---|---|---|---|---|---|
| NEW=> Residential | 70 | 26 | 26 | 350 | 24 (NEW) | 0.5 (NEW) |

END

## Tetrahydrofuran

| Diffusivity in air, $D_a$ ($cm^2/s$) | Diffusivity in water, $D_w$ ($cm^2/s$) | Henry's law constant at reference temperature, H (atm-$m^3$/mol) | Henry's law constant reference temperature, $T_R$ ($^oC$) | Enthalpy of vaporization at the normal boiling point, $\Delta H_{v,b}$ (cal/mol) | Normal boiling point, $T_B$ ($^oK$) | Critical temperature, $T_C$ ($^oK$) | Unit risk factor, URF ($\mu g/m^3)^{-1}$ | Reference conc., RfC ($mg/m^3$) | Molecular weight, MW (g/mol) |
|---|---|---|---|---|---|---|---|---|---|
| 9.54E-02 | 1.08E-05 | 7.05E-05 | 25 | 7,074 | 339.00 | 541.00 | 0.0E+00 | 2.0E+00 | 72.11 |

**END**

INTERMEDIATE CALCULATIONS SHEET

**Scenario:** **Residential**

**Chemical:** **Tetrahydrofuran**

| Source-building separation, $L_T$ (cm) | Vadose zone soil air-filled porosity, $\theta_a^V$ ($cm^3/cm^3$) | Vadose zone effective total fluid saturation, $S_{te}$ ($cm^3/cm^3$) | Vadose zone soil intrinsic permeability, $k_i$ ($cm^2$) | Vadose zone soil relative air permeability, $k_{rg}$ ($cm^2$) | Vadose zone soil effective vapor permeability, $k_v$ ($cm^2$) | Floor-wall seam perimeter, $X_{crack}$ (cm) | Soil gas conc. ($\mu g/m^3$) | Bldg. ventilation rate, $Q_{building}$ ($cm^3/s$) |
|---|---|---|---|---|---|---|---|---|
| 899 | 0.259 | 0.307 | 2.89E-09 | 0.798 | 2.30E-09 | 4,000 | 2.10E+01 | 3.39E+04 |

| Area of enclosed space below grade, $A_B$ ($cm^2$) | Crack-to-total area ratio, $\eta$ (unitless) | Crack depth below grade, $Z_{crack}$ (cm) | Enthalpy of vaporization at ave. soil temperature, $\Delta H_{v,TS}$ (cal/mol) | Henry's law constant at ave. soil temperature, $H_{TS}$ (atm-$m^3$/mol) | Henry's law constant at ave. soil temperature, $H'_{TS}$ (unitless) | Vapor viscosity at ave. soil temperature, $\mu_{TS}$ (g/cm-s) | Vadose zone effective diffusion coefficient, $D^{eff}_V$ ($cm^2/s$) | Diffusion path length, $L_d$ (cm) |
|---|---|---|---|---|---|---|---|---|
| 1.00E+06 | 5.00E-03 | 15 | 7,553 | 6.75E-05 | 2.77E-03 | 1.80E-04 | 5.57E-03 | 899 |

| Convection path length, $L_p$ (cm) | Source vapor conc., $C_{source}$ ($\mu g/m^3$) | Crack radius, $r_{crack}$ (cm) | Average vapor flow rate into bldg., $Q_{soil}$ ($cm^3/s$) | Crack effective diffusion coefficient, $D^{crack}$ ($cm^2/s$) | Area of crack, $A_{crack}$ ($cm^2$) | Exponent of equivalent foundation Peclet number, $exp(Pe^f)$ (unitless) | Infinite source indoor attenuation coefficient, $\alpha$ (unitless) | Infinite source bldg. conc., $C_{building}$ ($\mu g/m^3$) |
|---|---|---|---|---|---|---|---|---|
| 15 | 2.10E+01 | 1.25 | 8.33E+01 | 5.57E-03 | 5.00E+03 | 9.64E+12 | **1.70E-04** | 3.58E-03 |

| Unit risk factor, URF $(\mu g/m^3)^{-1}$ | Reference conc., RfC ($mg/m^3$) |
|---|---|
| NA | 2.0E+00 |

**END**

**Scenario:** **Residential**
**Chemical:** **Tetrahydrofuran**

INCREMENTAL RISK CALCULATIONS:

| Incremental risk from vapor intrusion to indoor air, carcinogen (unitless) | Hazard quotient from vapor intrusion to indoor air, noncarcinogen (unitless) |
|---|---|
| **NA** | **1.7E-06** |

**MESSAGE SUMMARY BELOW:**

**END**

USEPA SG-SCREEN
Version 2.0, 04/2003

DTSC Modification
December 2014

# Department of Toxic Substances Control
# Vapor Intrusion Screening Model - Soil Gas

DATA ENTRY SHEET

**Scenario:** Commercial
**Chemical:** Tetrahydrofuran

| Results Summary | | | | |
|---|---|---|---|---|
| Soil Gas Conc. ($\mu g/m^3$) | Attenuation Factor (unitless) | Indoor Air Conc. ($\mu g/m^3$) | Cancer Risk | Noncancer Hazard |
| 2.10E+01 | 8.5E-05 | 1.8E-03 | NA | 2.0E-07 |

Reset to Defaults

Soil Gas Concentration Data

| ENTER Chemical CAS No. (numbers only, no dashes) | ENTER Soil gas conc., $C_g$ ($\mu g/m^3$) | OR | ENTER Soil gas conc., $C_g$ (ppmv) | Chemical |
|---|---|---|---|---|
| 109999 | 2.10E+01 | | | Tetrahydrofuran |

MESSAGE: See VLOOKUP table comments on chemical properties and/or toxicity criteria for this chemical.

MORE ↓

| ENTER Depth below grade to bottom of enclosed space floor, $L_F$ (15 or 200 cm) | ENTER Soil gas sampling depth below grade, $L_s$ (cm) | ENTER Average soil temperature, $T_S$ ($^oC$) | ENTER Vadose zone SCS soil type (used to estimate soil vapor permeability) | OR | ENTER User-defined vadose zone soil vapor permeability, $k_v$ ($cm^2$) |
|---|---|---|---|---|---|
| 15 | 914 | 24 | SIL | | |

MORE ↓

| ENTER Vandose zone SCS soil type (Lookup Soil Parameters) | ENTER Vadose zone soil dry bulk density, $\rho_b^A$ ($g/cm^3$) | ENTER Vadose zone soil total porosity, $n^V$ (unitless) | ENTER Vadose zone soil water-filled porosity, $\theta_w^V$ ($cm^3/cm^3$) | ENTER Average vapor flow rate into bldg. (Leave blank to calculate) $Q_{soil}$ (L/m) |
|---|---|---|---|---|
| SIL | 1.49 | 0.439 | 0.18 | 5 |

MORE ↓

Lookup Receptor Parameters

| | ENTER Averaging time for carcinogens, $AT_C$ (yrs) | ENTER Averaging time for noncarcinogens, $AT_{NC}$ (yrs) | ENTER Exposure duration, ED (yrs) | ENTER Exposure frequency, EF (days/yr) | ENTER Exposure Time ET (hrs/day) | ENTER Air Exchange Rate ACH $(hour)^{-1}$ |
|---|---|---|---|---|---|---|
| NEW=> Commercial | 70 | 25 | 25 | 250 | 8 | 1 |
| | | | | | (NEW) | (NEW) |

END

## Tetrahydrofuran

| Diffusivity in air, $D_a$ ($cm^2/s$) | Diffusivity in water, $D_w$ ($cm^2/s$) | Henry's law constant at reference temperature, H (atm-$m^3$/mol) | Henry's law constant reference temperature, $T_R$ ($^oC$) | Enthalpy of vaporization at the normal boiling point, $\Delta H_{v,b}$ (cal/mol) | Normal boiling point, $T_B$ ($^oK$) | Critical temperature, $T_C$ ($^oK$) | Unit risk factor, URF ($\mu g/m^3)^{-1}$ | Reference conc., RfC ($mg/m^3$) | Molecular weight, MW (g/mol) |
|---|---|---|---|---|---|---|---|---|---|
| 9.54E-02 | 1.08E-05 | 7.05E-05 | 25 | 7,074 | 339.00 | 541.00 | 0.0E+00 | 2.0E+00 | 72.11 |

**END**

INTERMEDIATE CALCULATIONS SHEET

**Scenario:** **Commercial**

**Chemical:** **Tetrahydrofuran**

| Source-building separation, $L_T$ (cm) | Vadose zone soil air-filled porosity, $\theta_a^V$ ($cm^3/cm^3$) | Vadose zone effective total fluid saturation, $S_{te}$ ($cm^3/cm^3$) | Vadose zone soil intrinsic permeability, $k_i$ ($cm^2$) | Vadose zone soil relative air permeability, $k_{rg}$ ($cm^2$) | Vadose zone soil effective vapor permeability, $k_v$ ($cm^2$) | Floor-wall seam perimeter, $X_{crack}$ (cm) | Soil gas conc. ($\mu g/m^3$) | Bldg. ventilation rate, $Q_{building}$ ($cm^3/s$) |
|---|---|---|---|---|---|---|---|---|
| 899 | 0.259 | 0.307 | 2.89E-09 | 0.798 | 2.30E-09 | 4,000 | 2.10E+01 | 6.78E+04 |

| Area of enclosed space below grade, $A_B$ ($cm^2$) | Crack-to-total area ratio, $\eta$ (unitless) | Crack depth below grade, $Z_{crack}$ (cm) | Enthalpy of vaporization at ave. soil temperature, $\Delta H_{v,TS}$ (cal/mol) | Henry's law constant at ave. soil temperature, $H_{TS}$ (atm-$m^3$/mol) | Henry's law constant at ave. soil temperature, $H'_{TS}$ (unitless) | Vapor viscosity at ave. soil temperature, $\mu_{TS}$ (g/cm-s) | Vadose zone effective diffusion coefficient, $D^{eff}_V$ ($cm^2/s$) | Diffusion path length, $L_d$ (cm) |
|---|---|---|---|---|---|---|---|---|
| 1.00E+06 | 5.00E-03 | 15 | 7,553 | 6.75E-05 | 2.77E-03 | 1.80E-04 | 5.57E-03 | 899 |

| Convection path length, $L_p$ (cm) | Source vapor conc., $C_{source}$ ($\mu g/m^3$) | Crack radius, $r_{crack}$ (cm) | Average vapor flow rate into bldg., $Q_{soil}$ ($cm^3/s$) | Crack effective diffusion coefficient, $D^{crack}$ ($cm^2/s$) | Area of crack, $A_{crack}$ ($cm^2$) | Exponent of equivalent foundation Peclet number, $exp(Pe^f)$ (unitless) | Infinite source indoor attenuation coefficient, $\alpha$ (unitless) | Infinite source bldg. conc., $C_{building}$ ($\mu g/m^3$) |
|---|---|---|---|---|---|---|---|---|
| 15 | 2.10E+01 | 1.25 | 8.33E+01 | 5.57E-03 | 5.00E+03 | 9.64E+12 | **8.52E-05** | 1.79E-03 |

| Unit risk factor, URF $(\mu g/m^3)^{-1}$ | Reference conc., RfC ($mg/m^3$) |
|---|---|
| NA | 2.0E+00 |

**END**

**Scenario:** **Commercial**
**Chemical:** **Tetrahydrofuran**

INCREMENTAL RISK CALCULATIONS:

| Incremental risk from vapor intrusion to indoor air, carcinogen (unitless) | Hazard quotient from vapor intrusion to indoor air, noncarcinogen (unitless) |
|---|---|
| **NA** | **2.0E-07** |

**MESSAGE SUMMARY BELOW:**

**END**

USEPA SG-SCREEN
Version 2.0, 04/2003

DTSC Modification
December 2014

# Department of Toxic Substances Control
# Vapor Intrusion Screening Model - Soil Gas

DATA ENTRY SHEET

**Scenario:** Residential
**Chemical:** 1,2,4-Trimethylbenzene

| Results Summary | | | | |
|---|---|---|---|---|
| Soil Gas Conc. ($\mu g/m^3$) | Attenuation Factor (unitless) | Indoor Air Conc. ($\mu g/m^3$) | Cancer Risk | Noncancer Hazard |
| 8.40E+01 | 1.1E-04 | 9.2E-03 | NA | 1.3E-03 |

Reset to Defaults

Soil Gas Concentration Data

| ENTER Chemical CAS No. (numbers only, no dashes) | ENTER Soil gas conc., $C_g$ ($\mu g/m^3$) | OR | ENTER Soil gas conc., $C_g$ (ppmv) | Chemical |
|---|---|---|---|---|
| 95636 | 8.40E+01 | | | 1,2,4-Trimethylbenzene |

MORE ↓

| ENTER Depth below grade to bottom of enclosed space floor, $L_F$ (15 or 200 cm) | ENTER Soil gas sampling depth below grade, $L_s$ (cm) | ENTER Average soil temperature, $T_S$ ($^oC$) | ENTER Vadose zone SCS soil type (used to estimate soil vapor permeability) | OR | ENTER User-defined vadose zone soil vapor permeability, $k_v$ ($cm^2$) |
|---|---|---|---|---|---|
| 15 | 914 | 24 | SIL | | |

MORE ↓

| ENTER Vandose zone SCS soil type (Lookup Soil Parameters) | ENTER Vadose zone soil dry bulk density, $\rho_b^A$ ($g/cm^3$) | ENTER Vadose zone soil total porosity, $n^V$ (unitless) | ENTER Vadose zone soil water-filled porosity, $\theta_w^V$ ($cm^3/cm^3$) | ENTER Average vapor flow rate into bldg. (Leave blank to calculate) $Q_{soil}$ (L/m) |
|---|---|---|---|---|
| SIL | 1.49 | 0.439 | 0.18 | 5 |

MORE ↓

Lookup Receptor Parameters

| | ENTER Averaging time for carcinogens, $AT_C$ (yrs) | ENTER Averaging time for noncarcinogens, $AT_{NC}$ (yrs) | ENTER Exposure duration, ED (yrs) | ENTER Exposure frequency, EF (days/yr) | ENTER Exposure Time ET (hrs/day) | ENTER Air Exchange Rate ACH $(hour)^{-1}$ |
|---|---|---|---|---|---|---|
| NEW=> Residential | 70 | 26 | 26 | 350 | 24 (NEW) | 0.5 (NEW) |

END

## 1,2,4-Trimethylbenzene

| Diffusivity in air, $D_a$ ($cm^2/s$) | Diffusivity in water, $D_w$ ($cm^2/s$) | Henry's law constant at reference temperature, H ($atm\text{-}m^3/mol$) | Henry's law constant reference temperature, $T_R$ ($^oC$) | Enthalpy of vaporization at the normal boiling point, $\Delta H_{v,b}$ (cal/mol) | Normal boiling point, $T_B$ ($^oK$) | Critical temperature, $T_C$ ($^oK$) | Unit risk factor, URF $(\mu g/m^3)^{-1}$ | Reference conc., RfC ($mg/m^3$) | Molecular weight, MW (g/mol) |
|---|---|---|---|---|---|---|---|---|---|
| 6.07E-02 | 7.92E-06 | 6.16E-03 | 25 | 9,369 | 442.30 | 649.17 | 0.0E+00 | 7.0E-03 | 120.20 |

**END**

INTERMEDIATE CALCULATIONS SHEET

**Scenario:** **Residential**

**Chemical:** **1,2,4-Trimethylbenzene**

| Source-building separation, $L_T$ (cm) | Vadose zone soil air-filled porosity, $\theta_a^V$ ($cm^3/cm^3$) | Vadose zone effective total fluid saturation, $S_{te}$ ($cm^3/cm^3$) | Vadose zone soil intrinsic permeability, $k_i$ ($cm^2$) | Vadose zone soil relative air permeability, $k_{rg}$ ($cm^2$) | Vadose zone soil effective vapor permeability, $k_v$ ($cm^2$) | Floor-wall seam perimeter, $X_{crack}$ (cm) | Soil gas conc. ($\mu g/m^3$) | Bldg. ventilation rate, $Q_{building}$ ($cm^3/s$) |
|---|---|---|---|---|---|---|---|---|
| 899 | 0.259 | 0.307 | 2.89E-09 | 0.798 | 2.30E-09 | 4,000 | 8.40E+01 | 3.39E+04 |

| Area of enclosed space below grade, $A_B$ ($cm^2$) | Crack-to-total area ratio, $\eta$ (unitless) | Crack depth below grade, $Z_{crack}$ (cm) | Enthalpy of vaporization at ave. soil temperature, $\Delta H_{v,TS}$ (cal/mol) | Henry's law constant at ave. soil temperature, $H_{TS}$ (atm-$m^3$/mol) | Henry's law constant at ave. soil temperature, $H'_{TS}$ (unitless) | Vapor viscosity at ave. soil temperature, $\mu_{TS}$ (g/cm-s) | Vadose zone effective diffusion coefficient, $D^{eff}_V$ ($cm^2/s$) | Diffusion path length, $L_d$ (cm) |
|---|---|---|---|---|---|---|---|---|
| 1.00E+06 | 5.00E-03 | 15 | 11,516 | 5.77E-03 | 2.37E-01 | 1.80E-04 | 3.50E-03 | 899 |

| Convection path length, $L_p$ (cm) | Source vapor conc., $C_{source}$ ($\mu g/m^3$) | Crack radius, $r_{crack}$ (cm) | Average vapor flow rate into bldg., $Q_{soil}$ ($cm^3/s$) | Crack effective diffusion coefficient, $D^{crack}$ ($cm^2/s$) | Area of crack, $A_{crack}$ ($cm^2$) | Exponent of equivalent foundation Peclet number, $exp(Pe^f)$ (unitless) | Infinite source indoor attenuation coefficient, $\alpha$ (unitless) | Infinite source bldg. conc., $C_{building}$ ($\mu g/m^3$) |
|---|---|---|---|---|---|---|---|---|
| 15 | 8.40E+01 | 1.25 | 8.33E+01 | 3.50E-03 | 5.00E+03 | 4.60E+20 | **1.10E-04** | 9.23E-03 |

| Unit risk factor, URF $(\mu g/m^3)^{-1}$ | Reference conc., RfC ($mg/m^3$) |
|---|---|
| NA | 7.0E-03 |

**END**

**Scenario:** **Residential**
**Chemical:** **1,2,4-Trimethylbenzene**

INCREMENTAL RISK CALCULATIONS:

| Incremental risk from vapor intrusion to indoor air, carcinogen (unitless) | Hazard quotient from vapor intrusion to indoor air, noncarcinogen (unitless) |
|---|---|
| **NA** | **1.3E-03** |

**MESSAGE SUMMARY BELOW:**

**END**

USEPA SG-SCREEN
Version 2.0, 04/2003

DTSC Modification
December 2014

# Department of Toxic Substances Control
# Vapor Intrusion Screening Model - Soil Gas

DATA ENTRY SHEET

**Scenario:** Commercial
**Chemical:** 1,2,4-Trimethylbenzene

| Results Summary | | | | |
|---|---|---|---|---|
| Soil Gas Conc. ($\mu g/m^3$) | Attenuation Factor (unitless) | Indoor Air Conc. ($\mu g/m^3$) | Cancer Risk | Noncancer Hazard |
| 8.40E+01 | 5.5E-05 | 4.6E-03 | NA | 1.5E-04 |

MESSAGE: Attenuation factor < 6E-05 is unreasonably low.

Reset to Defaults

Soil Gas Concentration Data

| ENTER Chemical CAS No. (numbers only, no dashes) | ENTER Soil gas conc., $C_g$ ($\mu g/m^3$) | OR | ENTER Soil gas conc., $C_g$ (ppmv) | Chemical |
|---|---|---|---|---|
| 95636 | 8.40E+01 | | | 1,2,4-Trimethylbenzene |

MORE ↓

| ENTER Depth below grade to bottom of enclosed space floor, $L_F$ (15 or 200 cm) | ENTER Soil gas sampling depth below grade, $L_s$ (cm) | ENTER Average soil temperature, $T_S$ (°C) | ENTER Vadose zone SCS soil type (used to estimate soil vapor permeability) | OR | ENTER User-defined vadose zone soil vapor permeability, $k_v$ ($cm^2$) |
|---|---|---|---|---|---|
| 15 | 914 | 24 | SIL | | |

MORE ↓

| ENTER Vandose zone SCS soil type (Lookup Soil Parameters) | ENTER Vadose zone soil dry bulk density, $\rho_b^A$ ($g/cm^3$) | ENTER Vadose zone soil total porosity, $n^V$ (unitless) | ENTER Vadose zone soil water-filled porosity, $\theta_w^V$ ($cm^3/cm^3$) | ENTER Average vapor flow rate into bldg. (Leave blank to calculate) $Q_{soil}$ (L/m) |
|---|---|---|---|---|
| SIL | 1.49 | 0.439 | 0.18 | 5 |

MORE ↓

Lookup Receptor Parameters

| | ENTER Averaging time for carcinogens, $AT_C$ (yrs) | ENTER Averaging time for noncarcinogens, $AT_{NC}$ (yrs) | ENTER Exposure duration, ED (yrs) | ENTER Exposure frequency, EF (days/yr) | ENTER Exposure Time ET (hrs/day) | ENTER Air Exchange Rate ACH $(hour)^{-1}$ |
|---|---|---|---|---|---|---|
| NEW=> Commercial | 70 | 25 | 25 | 250 | 8 | 1 |
| | | | | | (NEW) | (NEW) |

END

## 1,2,4-Trimethylbenzene

| Diffusivity in air, $D_a$ ($cm^2/s$) | Diffusivity in water, $D_w$ ($cm^2/s$) | Henry's law constant at reference temperature, H ($atm\text{-}m^3/mol$) | Henry's law constant reference temperature, $T_R$ ($^oC$) | Enthalpy of vaporization at the normal boiling point, $\Delta H_{v,b}$ (cal/mol) | Normal boiling point, $T_B$ ($^oK$) | Critical temperature, $T_C$ ($^oK$) | Unit risk factor, URF $(\mu g/m^3)^{-1}$ | Reference conc., RfC ($mg/m^3$) | Molecular weight, MW (g/mol) |
|---|---|---|---|---|---|---|---|---|---|
| 6.07E-02 | 7.92E-06 | 6.16E-03 | 25 | 9,369 | 442.30 | 649.17 | 0.0E+00 | 7.0E-03 | 120.20 |

**END**

**Scenario:** **Commercial**

**Chemical:** **1,2,4-Trimethylbenzene**

| Source-building separation, $L_T$ (cm) | Vadose zone soil air-filled porosity, $\theta_a^V$ ($cm^3/cm^3$) | Vadose zone effective total fluid saturation, $S_{te}$ ($cm^3/cm^3$) | Vadose zone soil intrinsic permeability, $k_i$ ($cm^2$) | Vadose zone soil relative air permeability, $k_{rg}$ ($cm^2$) | Vadose zone soil effective vapor permeability, $k_v$ ($cm^2$) | Floor-wall seam perimeter, $X_{crack}$ (cm) | Soil gas conc. ($\mu g/m^3$) | Bldg. ventilation rate, $Q_{building}$ ($cm^3/s$) |
|---|---|---|---|---|---|---|---|---|
| 899 | 0.259 | 0.307 | 2.89E-09 | 0.798 | 2.30E-09 | 4,000 | 8.40E+01 | 6.78E+04 |

| Area of enclosed space below grade, $A_B$ ($cm^2$) | Crack-to-total area ratio, $\eta$ (unitless) | Crack depth below grade, $Z_{crack}$ (cm) | Enthalpy of vaporization at ave. soil temperature, $\Delta H_{v,TS}$ (cal/mol) | Henry's law constant at ave. soil temperature, $H_{TS}$ (atm-$m^3$/mol) | Henry's law constant at ave. soil temperature, $H'_{TS}$ (unitless) | Vapor viscosity at ave. soil temperature, $\mu_{TS}$ (g/cm-s) | Vadose zone effective diffusion coefficient, $D^{eff}_V$ ($cm^2/s$) | Diffusion path length, $L_d$ (cm) |
|---|---|---|---|---|---|---|---|---|
| 1.00E+06 | 5.00E-03 | 15 | 11,516 | 5.77E-03 | 2.37E-01 | 1.80E-04 | 3.50E-03 | 899 |

| Convection path length, $L_p$ (cm) | Source vapor conc., $C_{source}$ ($\mu g/m^3$) | Crack radius, $r_{crack}$ (cm) | Average vapor flow rate into bldg., $Q_{soil}$ ($cm^3/s$) | Crack effective diffusion coefficient, $D^{crack}$ ($cm^2/s$) | Area of crack, $A_{crack}$ ($cm^2$) | Exponent of equivalent foundation Peclet number, $exp(Pe^f)$ (unitless) | Infinite source indoor attenuation coefficient, $\alpha$ (unitless) | Infinite source bldg. conc., $C_{building}$ ($\mu g/m^3$) |
|---|---|---|---|---|---|---|---|---|
| 15 | 8.40E+01 | 1.25 | 8.33E+01 | 3.50E-03 | 5.00E+03 | 4.60E+20 | **5.49E-05** | 4.61E-03 |

**Warning: alpha < 6E-05 is unreasonably low.**

| Unit risk factor, URF $(\mu g/m^3)^{-1}$ | Reference conc., RfC ($mg/m^3$) |
|---|---|
| NA | 7.0E-03 |

**END**

**Scenario:** **Commercial**
**Chemical:** **1,2,4-Trimethylbenzene**

INCREMENTAL RISK CALCULATIONS:

| Incremental risk from vapor intrusion to indoor air, carcinogen (unitless) | Hazard quotient from vapor intrusion to indoor air, noncarcinogen (unitless) |
|---|---|
| **NA** | **1.5E-04** |

**MESSAGE SUMMARY BELOW:**

**END** MESSAGE: Attenuation factor < 6E-05 is unreasonably low.

USEPA SG-SCREEN
Version 2.0, 04/2003

DTSC Modification
December 2014

# Department of Toxic Substances Control
# Vapor Intrusion Screening Model - Soil Gas

DATA ENTRY SHEET

**Scenario:** Residential
**Chemical:** 1,2,4-Trimethylbenzene

| Results Summary | | | | |
|---|---|---|---|---|
| Soil Gas Conc. ($\mu g/m^3$) | Attenuation Factor (unitless) | Indoor Air Conc. ($\mu g/m^3$) | Cancer Risk | Noncancer Hazard |
| 1.70E+02 | 2.1E-04 | 3.6E-02 | NA | 5.0E-03 |

Reset to Defaults

Soil Gas Concentration Data

| ENTER Chemical CAS No. (numbers only, no dashes) | ENTER Soil gas conc., $C_g$ ($\mu g/m^3$) | OR | ENTER Soil gas conc., $C_g$ (ppmv) | Chemical |
|---|---|---|---|---|
| 95636 | 1.70E+02 | | | 1,2,4-Trimethylbenzene |

MORE ↓

| ENTER Depth below grade to bottom of enclosed space floor, $L_F$ (15 or 200 cm) | ENTER Soil gas sampling depth below grade, $L_s$ (cm) | ENTER Average soil temperature, $T_S$ ($^oC$) | ENTER Vadose zone SCS soil type (used to estimate soil vapor permeability) | OR | ENTER User-defined vadose zone soil vapor permeability, $k_v$ ($cm^2$) |
|---|---|---|---|---|---|
| 15 | 457 | 24 | SIL | | |

MORE ↓

| ENTER Vandose zone SCS soil type (Lookup Soil Parameters) | ENTER Vadose zone soil dry bulk density, $\rho_b^A$ ($g/cm^3$) | ENTER Vadose zone soil total porosity, $n^V$ (unitless) | ENTER Vadose zone soil water-filled porosity, $\theta_w^V$ ($cm^3/cm^3$) | ENTER Average vapor flow rate into bldg. (Leave blank to calculate) $Q_{soil}$ (L/m) |
|---|---|---|---|---|
| SIL | 1.49 | 0.439 | 0.18 | 5 |

MORE ↓

Lookup Receptor Parameters

| | ENTER Averaging time for carcinogens, $AT_C$ (yrs) | ENTER Averaging time for noncarcinogens, $AT_{NC}$ (yrs) | ENTER Exposure duration, ED (yrs) | ENTER Exposure frequency, EF (days/yr) | ENTER Exposure Time ET (hrs/day) | ENTER Air Exchange Rate ACH $(hour)^{-1}$ |
|---|---|---|---|---|---|---|
| NEW=> Residential | 70 | 26 | 26 | 350 | 24 (NEW) | 0.5 (NEW) |

END

## 1,2,4-Trimethylbenzene

| Diffusivity in air, $D_a$ ($cm^2/s$) | Diffusivity in water, $D_w$ ($cm^2/s$) | Henry's law constant at reference temperature, H ($atm\text{-}m^3/mol$) | Henry's law constant reference temperature, $T_R$ ($^oC$) | Enthalpy of vaporization at the normal boiling point, $\Delta H_{v,b}$ (cal/mol) | Normal boiling point, $T_B$ ($^oK$) | Critical temperature, $T_C$ ($^oK$) | Unit risk factor, URF $(\mu g/m^3)^{-1}$ | Reference conc., RfC ($mg/m^3$) | Molecular weight, MW (g/mol) |
|---|---|---|---|---|---|---|---|---|---|
| 6.07E-02 | 7.92E-06 | 6.16E-03 | 25 | 9,369 | 442.30 | 649.17 | 0.0E+00 | 7.0E-03 | 120.20 |

**END**

**Scenario:** **Residential**

**Chemical:** **1,2,4-Trimethylbenzene**

| Source-building separation, $L_T$ (cm) | Vadose zone soil air-filled porosity, $\theta_a^V$ ($cm^3/cm^3$) | Vadose zone effective total fluid saturation, $S_{te}$ ($cm^3/cm^3$) | Vadose zone soil intrinsic permeability, $k_i$ ($cm^2$) | Vadose zone soil relative air permeability, $k_{rg}$ ($cm^2$) | Vadose zone soil effective vapor permeability, $k_v$ ($cm^2$) | Floor-wall seam perimeter, $X_{crack}$ (cm) | Soil gas conc. ($\mu g/m^3$) | Bldg. ventilation rate, $Q_{building}$ ($cm^3/s$) |
|---|---|---|---|---|---|---|---|---|
| 442 | 0.259 | 0.307 | 2.89E-09 | 0.798 | 2.30E-09 | 4,000 | 1.70E+02 | 3.39E+04 |

| Area of enclosed space below grade, $A_B$ ($cm^2$) | Crack-to-total area ratio, $\eta$ (unitless) | Crack depth below grade, $Z_{crack}$ (cm) | Enthalpy of vaporization at ave. soil temperature, $\Delta H_{v,TS}$ (cal/mol) | Henry's law constant at ave. soil temperature, $H_{TS}$ (atm-$m^3$/mol) | Henry's law constant at ave. soil temperature, $H'_{TS}$ (unitless) | Vapor viscosity at ave. soil temperature, $\mu_{TS}$ (g/cm-s) | Vadose zone effective diffusion coefficient, $D^{eff}_V$ ($cm^2/s$) | Diffusion path length, $L_d$ (cm) |
|---|---|---|---|---|---|---|---|---|
| 1.00E+06 | 5.00E-03 | 15 | 11,516 | 5.77E-03 | 2.37E-01 | 1.80E-04 | 3.50E-03 | 442 |

| Convection path length, $L_p$ (cm) | Source vapor conc., $C_{source}$ ($\mu g/m^3$) | Crack radius, $r_{crack}$ (cm) | Average vapor flow rate into bldg., $Q_{soil}$ ($cm^3/s$) | Crack effective diffusion coefficient, $D^{crack}$ ($cm^2/s$) | Area of crack, $A_{crack}$ ($cm^2$) | Exponent of equivalent foundation Peclet number, $exp(Pe^f)$ (unitless) | Infinite source indoor attenuation coefficient, $\alpha$ (unitless) | Infinite source bldg. conc., $C_{building}$ ($\mu g/m^3$) |
|---|---|---|---|---|---|---|---|---|
| 15 | 1.70E+02 | 1.25 | 8.33E+01 | 3.50E-03 | 5.00E+03 | 4.60E+20 | **2.14E-04** | 3.63E-02 |

| Unit risk factor, URF $(\mu g/m^3)^{-1}$ | Reference conc., RfC ($mg/m^3$) |
|---|---|
| NA | 7.0E-03 |

**END**

**Scenario:** **Residential**
**Chemical:** **1,2,4-Trimethylbenzene**

INCREMENTAL RISK CALCULATIONS:

| Incremental risk from vapor intrusion to indoor air, carcinogen (unitless) | Hazard quotient from vapor intrusion to indoor air, noncarcinogen (unitless) |
|---|---|
| **NA** | **5.0E-03** |

**MESSAGE SUMMARY BELOW:**

**END**

USEPA SG-SCREEN
Version 2.0, 04/2003

DTSC Modification
December 2014

# Department of Toxic Substances Control
# Vapor Intrusion Screening Model - Soil Gas

DATA ENTRY SHEET

**Scenario:** Commercial
**Chemical:** 1,2,4-Trimethylbenzene

**Results Summary**

| Soil Gas Conc. ($\mu g/m^3$) | Attenuation Factor (unitless) | Indoor Air Conc. ($\mu g/m^3$) | Cancer Risk | Noncancer Hazard |
|---|---|---|---|---|
| 1.70E+02 | 1.1E-04 | 1.8E-02 | NA | 5.9E-04 |

Reset to Defaults

Soil Gas Concentration Data

| ENTER Chemical CAS No. (numbers only, no dashes) | ENTER Soil gas conc., $C_g$ ($\mu g/m^3$) | OR | ENTER Soil gas conc., $C_g$ (ppmv) | Chemical |
|---|---|---|---|---|
| 95636 | 1.70E+02 | | | 1,2,4-Trimethylbenzene |

MORE ↓

| ENTER Depth below grade to bottom of enclosed space floor, $L_F$ (15 or 200 cm) | ENTER Soil gas sampling depth below grade, $L_s$ (cm) | ENTER Average soil temperature, $T_S$ (°C) | ENTER Vadose zone SCS soil type (used to estimate soil vapor permeability) | OR | ENTER User-defined vadose zone soil vapor permeability, $k_v$ ($cm^2$) |
|---|---|---|---|---|---|
| 15 | 457 | 24 | SIL | | |

MORE ↓

| ENTER Vandose zone SCS soil type (Lookup Soil Parameters) | ENTER Vadose zone soil dry bulk density, $\rho_b^A$ ($g/cm^3$) | ENTER Vadose zone soil total porosity, $n^V$ (unitless) | ENTER Vadose zone soil water-filled porosity, $\theta_w^V$ ($cm^3/cm^3$) | ENTER Average vapor flow rate into bldg. (Leave blank to calculate) $Q_{soil}$ (L/m) |
|---|---|---|---|---|
| SIL | 1.49 | 0.439 | 0.18 | 5 |

MORE ↓

Lookup Receptor Parameters

| | ENTER Averaging time for carcinogens, $AT_C$ (yrs) | ENTER Averaging time for noncarcinogens, $AT_{NC}$ (yrs) | ENTER Exposure duration, ED (yrs) | ENTER Exposure frequency, EF (days/yr) | ENTER Exposure Time ET (hrs/day) | ENTER Air Exchange Rate ACH $(hour)^{-1}$ |
|---|---|---|---|---|---|---|
| NEW=> Commercial | 70 | 25 | 25 | 250 | 8 | 1 |
| | | | | | (NEW) | (NEW) |

END

## 1,2,4-Trimethylbenzene

| Diffusivity in air, $D_a$ ($cm^2/s$) | Diffusivity in water, $D_w$ ($cm^2/s$) | Henry's law constant at reference temperature, H ($atm\text{-}m^3/mol$) | Henry's law constant reference temperature, $T_R$ ($^oC$) | Enthalpy of vaporization at the normal boiling point, $\Delta H_{v,b}$ (cal/mol) | Normal boiling point, $T_B$ ($^oK$) | Critical temperature, $T_C$ ($^oK$) | Unit risk factor, URF $(\mu g/m^3)^{-1}$ | Reference conc., RfC ($mg/m^3$) | Molecular weight, MW (g/mol) |
|---|---|---|---|---|---|---|---|---|---|
| 6.07E-02 | 7.92E-06 | 6.16E-03 | 25 | 9,369 | 442.30 | 649.17 | 0.0E+00 | 7.0E-03 | 120.20 |

**END**

**Scenario:** **Commercial**

**Chemical:** **1,2,4-Trimethylbenzene**

| Source-building separation, $L_T$ (cm) | Vadose zone soil air-filled porosity, $\theta_a^V$ ($cm^3/cm^3$) | Vadose zone effective total fluid saturation, $S_{te}$ ($cm^3/cm^3$) | Vadose zone soil intrinsic permeability, $k_i$ ($cm^2$) | Vadose zone soil relative air permeability, $k_{rg}$ ($cm^2$) | Vadose zone soil effective vapor permeability, $k_v$ ($cm^2$) | Floor-wall seam perimeter, $X_{crack}$ (cm) | Soil gas conc. ($\mu g/m^3$) | Bldg. ventilation rate, $Q_{building}$ ($cm^3/s$) |
|---|---|---|---|---|---|---|---|---|
| 442 | 0.259 | 0.307 | 2.89E-09 | 0.798 | 2.30E-09 | 4,000 | 1.70E+02 | 6.78E+04 |

| Area of enclosed space below grade, $A_B$ ($cm^2$) | Crack-to-total area ratio, $\eta$ (unitless) | Crack depth below grade, $Z_{crack}$ (cm) | Enthalpy of vaporization at ave. soil temperature, $\Delta H_{v,TS}$ (cal/mol) | Henry's law constant at ave. soil temperature, $H_{TS}$ (atm-$m^3$/mol) | Henry's law constant at ave. soil temperature, $H'_{TS}$ (unitless) | Vapor viscosity at ave. soil temperature, $\mu_{TS}$ (g/cm-s) | Vadose zone effective diffusion coefficient, $D^{eff}_V$ ($cm^2/s$) | Diffusion path length, $L_d$ (cm) |
|---|---|---|---|---|---|---|---|---|
| 1.00E+06 | 5.00E-03 | 15 | 11,516 | 5.77E-03 | 2.37E-01 | 1.80E-04 | 3.50E-03 | 442 |

| Convection path length, $L_p$ (cm) | Source vapor conc., $C_{source}$ ($\mu g/m^3$) | Crack radius, $r_{crack}$ (cm) | Average vapor flow rate into bldg., $Q_{soil}$ ($cm^3/s$) | Crack effective diffusion coefficient, $D^{crack}$ ($cm^2/s$) | Area of crack, $A_{crack}$ ($cm^2$) | Exponent of equivalent foundation Peclet number, $exp(Pe^f)$ (unitless) | Infinite source indoor attenuation coefficient, $\alpha$ (unitless) | Infinite source bldg. conc., $C_{building}$ ($\mu g/m^3$) |
|---|---|---|---|---|---|---|---|---|
| 15 | 1.70E+02 | 1.25 | 8.33E+01 | 3.50E-03 | 5.00E+03 | 4.60E+20 | **1.07E-04** | 1.82E-02 |

| Unit risk factor, URF $(\mu g/m^3)^{-1}$ | Reference conc., RfC ($mg/m^3$) |
|---|---|
| NA | 7.0E-03 |

**END**

**Scenario:** **Commercial**
**Chemical:** **1,2,4-Trimethylbenzene**

INCREMENTAL RISK CALCULATIONS:

| Incremental risk from vapor intrusion to indoor air, carcinogen (unitless) | Hazard quotient from vapor intrusion to indoor air, noncarcinogen (unitless) |
|---|---|
| **NA** | **5.9E-04** |

**MESSAGE SUMMARY BELOW:**

**END**

USEPA SG-SCREEN
Version 2.0, 04/2003

DTSC Modification
December 2014

# Department of Toxic Substances Control
# Vapor Intrusion Screening Model - Soil Gas

DATA ENTRY SHEET

**Scenario:** Residential
**Chemical:** 1,3,5-Trimethylbenzene

## Results Summary

| Soil Gas Conc. ($\mu g/m^3$) | Attenuation Factor (unitless) | Indoor Air Conc. ($\mu g/m^3$) | Cancer Risk | Noncancer Hazard |
|---|---|---|---|---|
| 3.60E+01 | 1.1E-04 | 3.9E-03 | NA | 1.1E-04 |

MESSAGE: Risk and/or hazard quotient is based on route-to-route extrapolation.

Reset to Defaults

Soil Gas Concentration Data

| ENTER Chemical CAS No. (numbers only, no dashes) | ENTER Soil gas conc., $C_g$ ($\mu g/m^3$) | OR | ENTER Soil gas conc., $C_g$ (ppmv) | Chemical |
|---|---|---|---|---|
| 108678 | 3.60E+01 | | | 1,3,5-Trimethylbenzene |

MORE ↓

| ENTER Depth below grade to bottom of enclosed space floor, $L_F$ (15 or 200 cm) | ENTER Soil gas sampling depth below grade, $L_s$ (cm) | ENTER Average soil temperature, $T_S$ ($^oC$) | ENTER Vadose zone SCS soil type (used to estimate soil vapor permeability) | OR | ENTER User-defined vadose zone soil vapor permeability, $k_v$ ($cm^2$) |
|---|---|---|---|---|---|
| 15 | 914 | 24 | SIL | | |

MORE ↓

| ENTER Vandose zone SCS soil type (Lookup Soil Parameters) | ENTER Vadose zone soil dry bulk density, $\rho_b^A$ ($g/cm^3$) | ENTER Vadose zone soil total porosity, $n^V$ (unitless) | ENTER Vadose zone soil water-filled porosity, $\theta_w^V$ ($cm^3/cm^3$) | ENTER Average vapor flow rate into bldg. (Leave blank to calculate) $Q_{soil}$ (L/m) |
|---|---|---|---|---|
| SIL | 1.49 | 0.439 | 0.18 | 5 |

MORE ↓

Lookup Receptor Parameters

| | ENTER Averaging time for carcinogens, $AT_C$ (yrs) | ENTER Averaging time for noncarcinogens, $AT_{NC}$ (yrs) | ENTER Exposure duration, ED (yrs) | ENTER Exposure frequency, EF (days/yr) | ENTER Exposure Time ET (hrs/day) | ENTER Air Exchange Rate ACH $(hour)^{-1}$ |
|---|---|---|---|---|---|---|
| NEW=> Residential | 70 | 26 | 26 | 350 | 24 (NEW) | 0.5 (NEW) |

END

## 1,3,5-Trimethylbenzene

| Diffusivity in air, $D_a$ ($cm^2/s$) | Diffusivity in water, $D_w$ ($cm^2/s$) | Henry's law constant at reference temperature, H (atm-$m^3$/mol) | Henry's law constant reference temperature, $T_R$ ($^oC$) | Enthalpy of vaporization at the normal boiling point, $\Delta H_{v,b}$ (cal/mol) | Normal boiling point, $T_B$ ($^oK$) | Critical temperature, $T_C$ ($^oK$) | Unit risk factor, URF ($\mu g/m^3)^{-1}$ | Reference conc., RfC ($mg/m^3$) | Molecular weight, MW (g/mol) |
|---|---|---|---|---|---|---|---|---|---|
| 6.02E-02 | 7.84E-06 | 8.77E-03 | 25 | 9,321 | 437.89 | 637.25 | 0.0E+00 | 3.5E-02 | 120.20 |

**END**

**Scenario:** **Residential**

**Chemical:** **1,3,5-Trimethylbenzene**

| Source-building separation, $L_T$ (cm) | Vadose zone soil air-filled porosity, $\theta_a^V$ ($cm^3/cm^3$) | Vadose zone effective total fluid saturation, $S_{te}$ ($cm^3/cm^3$) | Vadose zone soil intrinsic permeability, $k_i$ ($cm^2$) | Vadose zone soil relative air permeability, $k_{rg}$ ($cm^2$) | Vadose zone soil effective vapor permeability, $k_v$ ($cm^2$) | Floor-wall seam perimeter, $X_{crack}$ (cm) | Soil gas conc. ($\mu g/m^3$) | Bldg. ventilation rate, $Q_{building}$ ($cm^3/s$) |
|---|---|---|---|---|---|---|---|---|
| 899 | 0.259 | 0.307 | 2.89E-09 | 0.798 | 2.30E-09 | 4,000 | 3.60E+01 | 3.39E+04 |

| Area of enclosed space below grade, $A_B$ ($cm^2$) | Crack-to-total area ratio, $\eta$ (unitless) | Crack depth below grade, $Z_{crack}$ (cm) | Enthalpy of vaporization at ave. soil temperature, $\Delta H_{v,TS}$ (cal/mol) | Henry's law constant at ave. soil temperature, $H_{TS}$ (atm-$m^3$/mol) | Henry's law constant at ave. soil temperature, $H'_{TS}$ (unitless) | Vapor viscosity at ave. soil temperature, $\mu_{TS}$ (g/cm-s) | Vadose zone effective diffusion coefficient, $D^{eff}_V$ ($cm^2/s$) | Diffusion path length, $L_d$ (cm) |
|---|---|---|---|---|---|---|---|---|
| 1.00E+06 | 5.00E-03 | 15 | 11,495 | 8.22E-03 | 3.37E-01 | 1.80E-04 | 3.48E-03 | 899 |

| Convection path length, $L_p$ (cm) | Source vapor conc., $C_{source}$ ($\mu g/m^3$) | Crack radius, $r_{crack}$ (cm) | Average vapor flow rate into bldg., $Q_{soil}$ ($cm^3/s$) | Crack effective diffusion coefficient, $D^{crack}$ ($cm^2/s$) | Area of crack, $A_{crack}$ ($cm^2$) | Exponent of equivalent foundation Peclet number, $exp(Pe^f)$ (unitless) | Infinite source indoor attenuation coefficient, $\alpha$ (unitless) | Infinite source bldg. conc., $C_{building}$ ($\mu g/m^3$) |
|---|---|---|---|---|---|---|---|---|
| 15 | 3.60E+01 | 1.25 | 8.33E+01 | 3.48E-03 | 5.00E+03 | 6.58E+20 | **1.09E-04** | 3.93E-03 |

| Unit risk factor, URF $(\mu g/m^3)^{-1}$ | Reference conc., RfC ($mg/m^3$) |
|---|---|
| NA | 3.5E-02 |

**END**

**Scenario:** **Residential**
**Chemical:** **1,3,5-Trimethylbenzene**

INCREMENTAL RISK CALCULATIONS:

| Incremental risk from vapor intrusion to indoor air, carcinogen (unitless) | Hazard quotient from vapor intrusion to indoor air, noncarcinogen (unitless) |
|---|---|
| **NA** | **1.1E-04** |

**MESSAGE SUMMARY BELOW:**

MESSAGE: Risk and/or hazard quotient is based on route-to-route extrapolation.

**END**

USEPA SG-SCREEN
Version 2.0, 04/2003

DTSC Modification
December 2014

# Department of Toxic Substances Control
# Vapor Intrusion Screening Model - Soil Gas

DATA ENTRY SHEET

**Scenario:** Commercial
**Chemical:** 1,3,5-Trimethylbenzene

| Results Summary | | | | |
|---|---|---|---|---|
| Soil Gas Conc. ($\mu g/m^3$) | Attenuation Factor (unitless) | Indoor Air Conc. ($\mu g/m^3$) | Cancer Risk | Noncancer Hazard |
| 3.60E+01 | 5.5E-05 | 2.0E-03 | NA | 1.3E-05 |

MESSAGE: Risk and/or hazard quotient is based on route-to-route extrapolation.
MESSAGE: Attenuation factor < 6E-05 is unreasonably low.

Reset to Defaults

Soil Gas Concentration Data

| ENTER Chemical CAS No. (numbers only, no dashes) | ENTER Soil gas conc., $C_g$ ($\mu g/m^3$) | OR | ENTER Soil gas conc., $C_g$ (ppmv) | Chemical |
|---|---|---|---|---|
| 108678 | 3.60E+01 | | | 1,3,5-Trimethylbenzene |

MORE ↓

| ENTER Depth below grade to bottom of enclosed space floor, $L_F$ (15 or 200 cm) | ENTER Soil gas sampling depth below grade, $L_s$ (cm) | ENTER Average soil temperature, $T_S$ (°C) | ENTER Vadose zone SCS soil type (used to estimate soil vapor permeability) | OR | ENTER User-defined vadose zone soil vapor permeability, $k_v$ ($cm^2$) |
|---|---|---|---|---|---|
| 15 | 914 | 24 | SIL | | |

MORE ↓

| ENTER Vandose zone SCS soil type (Lookup Soil Parameters) | ENTER Vadose zone soil dry bulk density, $\rho_b^A$ ($g/cm^3$) | ENTER Vadose zone soil total porosity, $n^V$ (unitless) | ENTER Vadose zone soil water-filled porosity, $\theta_w^V$ ($cm^3/cm^3$) | ENTER Average vapor flow rate into bldg. (Leave blank to calculate) $Q_{soil}$ (L/m) |
|---|---|---|---|---|
| SIL | 1.49 | 0.439 | 0.18 | 5 |

MORE ↓

Lookup Receptor Parameters

| | ENTER Averaging time for carcinogens, $AT_C$ (yrs) | ENTER Averaging time for noncarcinogens, $AT_{NC}$ (yrs) | ENTER Exposure duration, ED (yrs) | ENTER Exposure frequency, EF (days/yr) | ENTER Exposure Time ET (hrs/day) | ENTER Air Exchange Rate ACH $(hour)^{-1}$ |
|---|---|---|---|---|---|---|
| NEW=> Commercial | 70 | 25 | 25 | 250 | 8 | 1 |
| | | | | | (NEW) | (NEW) |

END

## 1,3,5-Trimethylbenzene

| Diffusivity in air, $D_a$ ($cm^2/s$) | Diffusivity in water, $D_w$ ($cm^2/s$) | Henry's law constant at reference temperature, H (atm-$m^3$/mol) | Henry's law constant reference temperature, $T_R$ ($^oC$) | Enthalpy of vaporization at the normal boiling point, $\Delta H_{v,b}$ (cal/mol) | Normal boiling point, $T_B$ ($^oK$) | Critical temperature, $T_C$ ($^oK$) | Unit risk factor, URF ($\mu g/m^3)^{-1}$ | Reference conc., RfC ($mg/m^3$) | Molecular weight, MW (g/mol) |
|---|---|---|---|---|---|---|---|---|---|
| 6.02E-02 | 7.84E-06 | 8.77E-03 | 25 | 9,321 | 437.89 | 637.25 | 0.0E+00 | 3.5E-02 | 120.20 |

**END**

INTERMEDIATE CALCULATIONS SHEET

**Scenario:** **Commercial**

**Chemical:** **1,3,5-Trimethylbenzene**

| Source-building separation, $L_T$ (cm) | Vadose zone soil air-filled porosity, $\theta_a^V$ ($cm^3/cm^3$) | Vadose zone effective total fluid saturation, $S_{te}$ ($cm^3/cm^3$) | Vadose zone soil intrinsic permeability, $k_i$ ($cm^2$) | Vadose zone soil relative air permeability, $k_{rg}$ ($cm^2$) | Vadose zone soil effective vapor permeability, $k_v$ ($cm^2$) | Floor-wall seam perimeter, $X_{crack}$ (cm) | Soil gas conc. ($\mu g/m^3$) | Bldg. ventilation rate, $Q_{building}$ ($cm^3/s$) |
|---|---|---|---|---|---|---|---|---|
| 899 | 0.259 | 0.307 | 2.89E-09 | 0.798 | 2.30E-09 | 4,000 | 3.60E+01 | 6.78E+04 |

| Area of enclosed space below grade, $A_B$ ($cm^2$) | Crack-to-total area ratio, $\eta$ (unitless) | Crack depth below grade, $Z_{crack}$ (cm) | Enthalpy of vaporization at ave. soil temperature, $\Delta H_{v,TS}$ (cal/mol) | Henry's law constant at ave. soil temperature, $H_{TS}$ (atm-$m^3$/mol) | Henry's law constant at ave. soil temperature, $H'_{TS}$ (unitless) | Vapor viscosity at ave. soil temperature, $\mu_{TS}$ (g/cm-s) | Vadose zone effective diffusion coefficient, $D^{eff}_V$ ($cm^2/s$) | Diffusion path length, $L_d$ (cm) |
|---|---|---|---|---|---|---|---|---|
| 1.00E+06 | 5.00E-03 | 15 | 11,495 | 8.22E-03 | 3.37E-01 | 1.80E-04 | 3.48E-03 | 899 |

| Convection path length, $L_p$ (cm) | Source vapor conc., $C_{source}$ ($\mu g/m^3$) | Crack radius, $r_{crack}$ (cm) | Average vapor flow rate into bldg., $Q_{soil}$ ($cm^3/s$) | Crack effective diffusion coefficient, $D^{crack}$ ($cm^2/s$) | Area of crack, $A_{crack}$ ($cm^2$) | Exponent of equivalent foundation Peclet number, $exp(Pe^f)$ (unitless) | Infinite source indoor attenuation coefficient, $\alpha$ (unitless) | Infinite source bldg. conc., $C_{building}$ ($\mu g/m^3$) |
|---|---|---|---|---|---|---|---|---|
| 15 | 3.60E+01 | 1.25 | 8.33E+01 | 3.48E-03 | 5.00E+03 | 6.58E+20 | **5.45E-05** | 1.96E-03 |

**Warning: alpha < 6E-05 is unreasonably low.**

| Unit risk factor, URF $(\mu g/m^3)^{-1}$ | Reference conc., RfC ($mg/m^3$) |
|---|---|
| NA | 3.5E-02 |

**END**

**Scenario:** **Commercial**
**Chemical:** **1,3,5-Trimethylbenzene**

INCREMENTAL RISK CALCULATIONS:

| Incremental risk from vapor intrusion to indoor air, carcinogen (unitless) | Hazard quotient from vapor intrusion to indoor air, noncarcinogen (unitless) |
|---|---|
| **NA** | **1.3E-05** |

**MESSAGE SUMMARY BELOW:**

MESSAGE: Risk and/or hazard quotient is based on route-to-route extrapolation.

**END**

MESSAGE: Attenuation factor < 6E-05 is unreasonably low.

USEPA SG-SCREEN
Version 2.0, 04/2003

DTSC Modification
December 2014

# Department of Toxic Substances Control
# Vapor Intrusion Screening Model - Soil Gas

DATA ENTRY SHEET

**Scenario:** Residential
**Chemical:** Toluene

| Results Summary | | | | |
|---|---|---|---|---|
| Soil Gas Conc. ($\mu g/m^3$) | Attenuation Factor (unitless) | Indoor Air Conc. ($\mu g/m^3$) | Cancer Risk | Noncancer Hazard |
| 2.10E+01 | 2.7E-04 | 5.6E-03 | NA | 1.8E-05 |

Reset to Defaults

Soil Gas Concentration Data

| ENTER Chemical CAS No. (numbers only, no dashes) | ENTER Soil gas conc., $C_g$ ($\mu g/m^3$) | OR | ENTER Soil gas conc., $C_g$ (ppmv) | Chemical |
|---|---|---|---|---|
| 108883 | 2.10E+01 | | | Toluene |

MORE ↓

| ENTER Depth below grade to bottom of enclosed space floor, $L_F$ (15 or 200 cm) | ENTER Soil gas sampling depth below grade, $L_s$ (cm) | ENTER Average soil temperature, $T_S$ ($^oC$) | ENTER Vadose zone SCS soil type (used to estimate soil vapor permeability) | OR | ENTER User-defined vadose zone soil vapor permeability, $k_v$ ($cm^2$) |
|---|---|---|---|---|---|
| 15 | 457 | 24 | SIL | | |

MORE ↓

| ENTER Vandose zone SCS soil type (Lookup Soil Parameters) | ENTER Vadose zone soil dry bulk density, $\rho_b^A$ ($g/cm^3$) | ENTER Vadose zone soil total porosity, $n^V$ (unitless) | ENTER Vadose zone soil water-filled porosity, $\theta_w^V$ ($cm^3/cm^3$) | ENTER Average vapor flow rate into bldg. (Leave blank to calculate) $Q_{soil}$ (L/m) |
|---|---|---|---|---|
| SIL | 1.49 | 0.439 | 0.18 | 5 |

MORE ↓

Lookup Receptor Parameters

| | ENTER Averaging time for carcinogens, $AT_C$ (yrs) | ENTER Averaging time for noncarcinogens, $AT_{NC}$ (yrs) | ENTER Exposure duration, ED (yrs) | ENTER Exposure frequency, EF (days/yr) | ENTER Exposure Time ET (hrs/day) | ENTER Air Exchange Rate ACH $(hour)^{-1}$ |
|---|---|---|---|---|---|---|
| NEW=> Residential | 70 | 26 | 26 | 350 | 24 (NEW) | 0.5 (NEW) |

END

## Toluene

| Diffusivity in air, $D_a$ ($cm^2/s$) | Diffusivity in water, $D_w$ ($cm^2/s$) | Henry's law constant at reference temperature, H (atm-$m^3$/mol) | Henry's law constant reference temperature, $T_R$ ($^oC$) | Enthalpy of vaporization at the normal boiling point, $\Delta H_{v,b}$ (cal/mol) | Normal boiling point, $T_B$ ($^oK$) | Critical temperature, $T_C$ ($^oK$) | Unit risk factor, URF ($\mu g/m^3)^{-1}$ | Reference conc., RfC ($mg/m^3$) | Molecular weight, MW (g/mol) |
|---|---|---|---|---|---|---|---|---|---|
| 7.78E-02 | 9.20E-06 | 6.64E-03 | 25 | 7,930 | 383.78 | 591.79 | 0.0E+00 | 3.0E-01 | 92.14 |

**END**

INTERMEDIATE CALCULATIONS SHEET

**Scenario:** **Residential**

**Chemical:** **Toluene**

| Source-building separation, $L_T$ (cm) | Vadose zone soil air-filled porosity, $\theta_a^V$ ($cm^3/cm^3$) | Vadose zone effective total fluid saturation, $S_{te}$ ($cm^3/cm^3$) | Vadose zone soil intrinsic permeability, $k_i$ ($cm^2$) | Vadose zone soil relative air permeability, $k_{rg}$ ($cm^2$) | Vadose zone soil effective vapor permeability, $k_v$ ($cm^2$) | Floor-wall seam perimeter, $X_{crack}$ (cm) | Soil gas conc. ($\mu g/m^3$) | Bldg. ventilation rate, $Q_{building}$ ($cm^3/s$) |
|---|---|---|---|---|---|---|---|---|
| 442 | 0.259 | 0.307 | 2.89E-09 | 0.798 | 2.30E-09 | 4,000 | 2.10E+01 | 3.39E+04 |

| Area of enclosed space below grade, $A_B$ ($cm^2$) | Crack-to-total area ratio, $\eta$ (unitless) | Crack depth below grade, $Z_{crack}$ (cm) | Enthalpy of vaporization at ave. soil temperature, $\Delta H_{v,TS}$ (cal/mol) | Henry's law constant at ave. soil temperature, $H_{TS}$ (atm-$m^3$/mol) | Henry's law constant at ave. soil temperature, $H'_{TS}$ (unitless) | Vapor viscosity at ave. soil temperature, $\mu_{TS}$ (g/cm-s) | Vadose zone effective diffusion coefficient, $D^{eff}_V$ ($cm^2/s$) | Diffusion path length, $L_d$ (cm) |
|---|---|---|---|---|---|---|---|---|
| 1.00E+06 | 5.00E-03 | 15 | 9,001 | 6.31E-03 | 2.59E-01 | 1.80E-04 | 4.49E-03 | 442 |

| Convection path length, $L_p$ (cm) | Source vapor conc., $C_{source}$ ($\mu g/m^3$) | Crack radius, $r_{crack}$ (cm) | Average vapor flow rate into bldg., $Q_{soil}$ ($cm^3/s$) | Crack effective diffusion coefficient, $D^{crack}$ ($cm^2/s$) | Area of crack, $A_{crack}$ ($cm^2$) | Exponent of equivalent foundation Peclet number, $exp(Pe^f)$ (unitless) | Infinite source indoor attenuation coefficient, $\alpha$ (unitless) | Infinite source bldg. conc., $C_{building}$ ($\mu g/m^3$) |
|---|---|---|---|---|---|---|---|---|
| 15 | 2.10E+01 | 1.25 | 8.33E+01 | 4.49E-03 | 5.00E+03 | 1.30E+16 | **2.67E-04** | 5.61E-03 |

| Unit risk factor, URF $(\mu g/m^3)^{-1}$ | Reference conc., RfC ($mg/m^3$) |
|---|---|
| NA | 3.0E-01 |

**END**

RESULTS SHEET

**Scenario:** **Residential**
**Chemical:** **Toluene**

INCREMENTAL RISK CALCULATIONS:

| Incremental risk from vapor intrusion to indoor air, carcinogen (unitless) | Hazard quotient from vapor intrusion to indoor air, noncarcinogen (unitless) |
|---|---|
| **NA** | **1.8E-05** |

**MESSAGE SUMMARY BELOW:**

**END**

USEPA SG-SCREEN
Version 2.0, 04/2003

DTSC Modification
December 2014

# Department of Toxic Substances Control
# Vapor Intrusion Screening Model - Soil Gas

DATA ENTRY SHEET

**Scenario:** Commercial
**Chemical:** Toluene

| Results Summary | | | | |
|---|---|---|---|---|
| Soil Gas Conc. ($\mu g/m^3$) | Attenuation Factor (unitless) | Indoor Air Conc. ($\mu g/m^3$) | Cancer Risk | Noncancer Hazard |
| 2.10E+01 | 1.3E-04 | 2.8E-03 | NA | 2.1E-06 |

Reset to Defaults

Soil Gas Concentration Data

| ENTER Chemical CAS No. (numbers only, no dashes) | ENTER Soil gas conc., $C_g$ ($\mu g/m^3$) | OR | ENTER Soil gas conc., $C_g$ (ppmv) | Chemical |
|---|---|---|---|---|
| 108883 | 2.10E+01 | | | Toluene |

MORE ↓

| ENTER Depth below grade to bottom of enclosed space floor, $L_F$ (15 or 200 cm) | ENTER Soil gas sampling depth below grade, $L_s$ (cm) | ENTER Average soil temperature, $T_S$ ($^oC$) | ENTER Vadose zone SCS soil type (used to estimate soil vapor permeability) | OR | ENTER User-defined vadose zone soil vapor permeability, $k_v$ ($cm^2$) |
|---|---|---|---|---|---|
| 15 | 457 | 24 | SIL | | |

MORE ↓

| ENTER Vandose zone SCS soil type (Lookup Soil Parameters) | ENTER Vadose zone soil dry bulk density, $\rho_b^A$ ($g/cm^3$) | ENTER Vadose zone soil total porosity, $n^V$ (unitless) | ENTER Vadose zone soil water-filled porosity, $\theta_w^V$ ($cm^3/cm^3$) | ENTER Average vapor flow rate into bldg. (Leave blank to calculate) $Q_{soil}$ (L/m) |
|---|---|---|---|---|
| SIL | 1.49 | 0.439 | 0.18 | 5 |

MORE ↓

Lookup Receptor Parameters

| | ENTER Averaging time for carcinogens, $AT_C$ (yrs) | ENTER Averaging time for noncarcinogens, $AT_{NC}$ (yrs) | ENTER Exposure duration, ED (yrs) | ENTER Exposure frequency, EF (days/yr) | ENTER Exposure Time ET (hrs/day) | ENTER Air Exchange Rate ACH $(hour)^{-1}$ |
|---|---|---|---|---|---|---|
| NEW=> Commercial | 70 | 25 | 25 | 250 | 8 | 1 |
| | | | | | (NEW) | (NEW) |

END

## Toluene

| Diffusivity in air, $D_a$ ($cm^2/s$) | Diffusivity in water, $D_w$ ($cm^2/s$) | Henry's law constant at reference temperature, H (atm-$m^3$/mol) | Henry's law constant reference temperature, $T_R$ ($^oC$) | Enthalpy of vaporization at the normal boiling point, $\Delta H_{v,b}$ (cal/mol) | Normal boiling point, $T_B$ ($^oK$) | Critical temperature, $T_C$ ($^oK$) | Unit risk factor, URF ($\mu g/m^3)^{-1}$ | Reference conc., RfC ($mg/m^3$) | Molecular weight, MW (g/mol) |
|---|---|---|---|---|---|---|---|---|---|
| 7.78E-02 | 9.20E-06 | 6.64E-03 | 25 | 7,930 | 383.78 | 591.79 | 0.0E+00 | 3.0E-01 | 92.14 |

**END**

INTERMEDIATE CALCULATIONS SHEET

**Scenario:** **Commercial**

**Chemical:** **Toluene**

| Source-building separation, $L_T$ (cm) | Vadose zone soil air-filled porosity, $\theta_a^V$ ($cm^3/cm^3$) | Vadose zone effective total fluid saturation, $S_{te}$ ($cm^3/cm^3$) | Vadose zone soil intrinsic permeability, $k_i$ ($cm^2$) | Vadose zone soil relative air permeability, $k_{rg}$ ($cm^2$) | Vadose zone soil effective vapor permeability, $k_v$ ($cm^2$) | Floor-wall seam perimeter, $X_{crack}$ (cm) | Soil gas conc. ($\mu g/m^3$) | Bldg. ventilation rate, $Q_{building}$ ($cm^3/s$) |
|---|---|---|---|---|---|---|---|---|
| 442 | 0.259 | 0.307 | 2.89E-09 | 0.798 | 2.30E-09 | 4,000 | 2.10E+01 | 6.78E+04 |

| Area of enclosed space below grade, $A_B$ ($cm^2$) | Crack-to-total area ratio, $\eta$ (unitless) | Crack depth below grade, $Z_{crack}$ (cm) | Enthalpy of vaporization at ave. soil temperature, $\Delta H_{v,TS}$ (cal/mol) | Henry's law constant at ave. soil temperature, $H_{TS}$ (atm-$m^3$/mol) | Henry's law constant at ave. soil temperature, $H'_{TS}$ (unitless) | Vapor viscosity at ave. soil temperature, $\mu_{TS}$ (g/cm-s) | Vadose zone effective diffusion coefficient, $D^{eff}_V$ ($cm^2/s$) | Diffusion path length, $L_d$ (cm) |
|---|---|---|---|---|---|---|---|---|
| 1.00E+06 | 5.00E-03 | 15 | 9,001 | 6.31E-03 | 2.59E-01 | 1.80E-04 | 4.49E-03 | 442 |

| Convection path length, $L_p$ (cm) | Source vapor conc., $C_{source}$ ($\mu g/m^3$) | Crack radius, $r_{crack}$ (cm) | Average vapor flow rate into bldg., $Q_{soil}$ ($cm^3/s$) | Crack effective diffusion coefficient, $D^{crack}$ ($cm^2/s$) | Area of crack, $A_{crack}$ ($cm^2$) | Exponent of equivalent foundation Peclet number, $exp(Pe^f)$ (unitless) | Infinite source indoor attenuation coefficient, $\alpha$ (unitless) | Infinite source bldg. conc., $C_{building}$ ($\mu g/m^3$) |
|---|---|---|---|---|---|---|---|---|
| 15 | 2.10E+01 | 1.25 | 8.33E+01 | 4.49E-03 | 5.00E+03 | 1.30E+16 | **1.34E-04** | 2.81E-03 |

| Unit risk factor, URF $(\mu g/m^3)^{-1}$ | Reference conc., RfC ($mg/m^3$) |
|---|---|
| NA | 3.0E-01 |

**END**

**Scenario:** **Commercial**
**Chemical:** **Toluene**

INCREMENTAL RISK CALCULATIONS:

| Incremental risk from vapor intrusion to indoor air, carcinogen (unitless) | Hazard quotient from vapor intrusion to indoor air, noncarcinogen (unitless) |
|---|---|
| **NA** | **2.1E-06** |

**MESSAGE SUMMARY BELOW:**

**END**

USEPA SG-SCREEN
Version 2.0, 04/2003

DTSC Modification
December 2014

# Department of Toxic Substances Control
# Vapor Intrusion Screening Model - Soil Gas

DATA ENTRY SHEET

**Scenario:** Residential
**Chemical:** Toluene

| Results Summary | | | | |
|---|---|---|---|---|
| Soil Gas Conc. ($\mu g/m^3$) | Attenuation Factor (unitless) | Indoor Air Conc. ($\mu g/m^3$) | Cancer Risk | Noncancer Hazard |
| 8.80E+01 | 1.4E-04 | 1.2E-02 | NA | 3.9E-05 |

Reset to Defaults

Soil Gas Concentration Data

| ENTER Chemical CAS No. (numbers only, no dashes) | ENTER Soil gas conc., $C_g$ ($\mu g/m^3$) | OR | ENTER Soil gas conc., $C_g$ (ppmv) | Chemical |
|---|---|---|---|---|
| 108883 | 8.80E+01 | | | Toluene |

MORE ↓

| ENTER Depth below grade to bottom of enclosed space floor, $L_F$ (15 or 200 cm) | ENTER Soil gas sampling depth below grade, $L_s$ (cm) | ENTER Average soil temperature, $T_S$ ($^oC$) | ENTER Vadose zone SCS soil type (used to estimate soil vapor permeability) | OR | ENTER User-defined vadose zone soil vapor permeability, $k_v$ ($cm^2$) |
|---|---|---|---|---|---|
| 15 | 914 | 24 | SIL | | |

MORE ↓

| ENTER Vandose zone SCS soil type (Lookup Soil Parameters) | ENTER Vadose zone soil dry bulk density, $\rho_b^A$ ($g/cm^3$) | ENTER Vadose zone soil total porosity, $n^V$ (unitless) | ENTER Vadose zone soil water-filled porosity, $\theta_w^V$ ($cm^3/cm^3$) | ENTER Average vapor flow rate into bldg. (Leave blank to calculate) $Q_{soil}$ (L/m) |
|---|---|---|---|---|
| SIL | 1.49 | 0.439 | 0.18 | 5 |

MORE ↓

Lookup Receptor Parameters

| | ENTER Averaging time for carcinogens, $AT_C$ (yrs) | ENTER Averaging time for noncarcinogens, $AT_{NC}$ (yrs) | ENTER Exposure duration, ED (yrs) | ENTER Exposure frequency, EF (days/yr) | ENTER Exposure Time ET (hrs/day) | ENTER Air Exchange Rate ACH $(hour)^{-1}$ |
|---|---|---|---|---|---|---|
| NEW=> Residential | 70 | 26 | 26 | 350 | 24 | 0.5 |
| | | | | | (NEW) | (NEW) |

END

## Toluene

| Diffusivity in air, $D_a$ ($cm^2/s$) | Diffusivity in water, $D_w$ ($cm^2/s$) | Henry's law constant at reference temperature, H (atm-$m^3$/mol) | Henry's law constant reference temperature, $T_R$ ($^oC$) | Enthalpy of vaporization at the normal boiling point, $\Delta H_{v,b}$ (cal/mol) | Normal boiling point, $T_B$ ($^oK$) | Critical temperature, $T_C$ ($^oK$) | Unit risk factor, URF ($\mu g/m^3)^{-1}$ | Reference conc., RfC ($mg/m^3$) | Molecular weight, MW (g/mol) |
|---|---|---|---|---|---|---|---|---|---|
| 7.78E-02 | 9.20E-06 | 6.64E-03 | 25 | 7,930 | 383.78 | 591.79 | 0.0E+00 | 3.0E-01 | 92.14 |

**END**

INTERMEDIATE CALCULATIONS SHEET

**Scenario:** **Residential**

**Chemical:** **Toluene**

| Source-building separation, $L_T$ (cm) | Vadose zone soil air-filled porosity, $\theta_a^V$ ($cm^3/cm^3$) | Vadose zone effective total fluid saturation, $S_{te}$ ($cm^3/cm^3$) | Vadose zone soil intrinsic permeability, $k_i$ ($cm^2$) | Vadose zone soil relative air permeability, $k_{rg}$ ($cm^2$) | Vadose zone soil effective vapor permeability, $k_v$ ($cm^2$) | Floor-wall seam perimeter, $X_{crack}$ (cm) | Soil gas conc. ($\mu g/m^3$) | Bldg. ventilation rate, $Q_{building}$ ($cm^3/s$) |
|---|---|---|---|---|---|---|---|---|
| 899 | 0.259 | 0.307 | 2.89E-09 | 0.798 | 2.30E-09 | 4,000 | 8.80E+01 | 3.39E+04 |

| Area of enclosed space below grade, $A_B$ ($cm^2$) | Crack-to-total area ratio, $\eta$ (unitless) | Crack depth below grade, $Z_{crack}$ (cm) | Enthalpy of vaporization at ave. soil temperature, $\Delta H_{v,TS}$ (cal/mol) | Henry's law constant at ave. soil temperature, $H_{TS}$ (atm-$m^3$/mol) | Henry's law constant at ave. soil temperature, $H'_{TS}$ (unitless) | Vapor viscosity at ave. soil temperature, $\mu_{TS}$ (g/cm-s) | Vadose zone effective diffusion coefficient, $D^{eff}_V$ ($cm^2/s$) | Diffusion path length, $L_d$ (cm) |
|---|---|---|---|---|---|---|---|---|
| 1.00E+06 | 5.00E-03 | 15 | 9,001 | 6.31E-03 | 2.59E-01 | 1.80E-04 | 4.49E-03 | 899 |

| Convection path length, $L_p$ (cm) | Source vapor conc., $C_{source}$ ($\mu g/m^3$) | Crack radius, $r_{crack}$ (cm) | Average vapor flow rate into bldg., $Q_{soil}$ ($cm^3/s$) | Crack effective diffusion coefficient, $D^{crack}$ ($cm^2/s$) | Area of crack, $A_{crack}$ ($cm^2$) | Exponent of equivalent foundation Peclet number, $exp(Pe^f)$ (unitless) | Infinite source indoor attenuation coefficient, $\alpha$ (unitless) | Infinite source bldg. conc., $C_{building}$ ($\mu g/m^3$) |
|---|---|---|---|---|---|---|---|---|
| 15 | 8.80E+01 | 1.25 | 8.33E+01 | 4.49E-03 | 5.00E+03 | 1.30E+16 | **1.39E-04** | 1.22E-02 |

| Unit risk factor, URF $(\mu g/m^3)^{-1}$ | Reference conc., RfC ($mg/m^3$) |
|---|---|
| NA | 3.0E-01 |

**END**

**Scenario:** **Residential**
**Chemical:** **Toluene**

INCREMENTAL RISK CALCULATIONS:

| Incremental risk from vapor intrusion to indoor air, carcinogen (unitless) | Hazard quotient from vapor intrusion to indoor air, noncarcinogen (unitless) |
|---|---|
| **NA** | **3.9E-05** |

**MESSAGE SUMMARY BELOW:**

**END**

USEPA SG-SCREEN
Version 2.0, 04/2003

DTSC Modification
December 2014

# Department of Toxic Substances Control
# Vapor Intrusion Screening Model - Soil Gas

DATA ENTRY SHEET

**Scenario:** Commercial
**Chemical:** Toluene

| Results Summary | | | | |
|---|---|---|---|---|
| Soil Gas Conc. ($\mu g/m^3$) | Attenuation Factor (unitless) | Indoor Air Conc. ($\mu g/m^3$) | Cancer Risk | Noncancer Hazard |
| 8.80E+01 | 7.0E-05 | 6.1E-03 | NA | 4.7E-06 |

Reset to Defaults

Soil Gas Concentration Data

| ENTER Chemical CAS No. (numbers only, no dashes) | ENTER Soil gas conc., $C_g$ ($\mu g/m^3$) | OR | ENTER Soil gas conc., $C_g$ (ppmv) | Chemical |
|---|---|---|---|---|
| 108883 | 8.80E+01 | | | Toluene |

MORE ↓

| ENTER Depth below grade to bottom of enclosed space floor, $L_F$ (15 or 200 cm) | ENTER Soil gas sampling depth below grade, $L_s$ (cm) | ENTER Average soil temperature, $T_S$ ($^oC$) | ENTER Vadose zone SCS soil type (used to estimate soil vapor permeability) | OR | ENTER User-defined vadose zone soil vapor permeability, $k_v$ ($cm^2$) |
|---|---|---|---|---|---|
| 15 | 914 | 24 | SIL | | |

MORE ↓

| ENTER Vandose zone SCS soil type (Lookup Soil Parameters) | ENTER Vadose zone soil dry bulk density, $\rho_b^A$ ($g/cm^3$) | ENTER Vadose zone soil total porosity, $n^V$ (unitless) | ENTER Vadose zone soil water-filled porosity, $\theta_w^V$ ($cm^3/cm^3$) | ENTER Average vapor flow rate into bldg. (Leave blank to calculate) $Q_{soil}$ (L/m) |
|---|---|---|---|---|
| SIL | 1.49 | 0.439 | 0.18 | 5 |

MORE ↓

Lookup Receptor Parameters

| | ENTER Averaging time for carcinogens, $AT_C$ (yrs) | ENTER Averaging time for noncarcinogens, $AT_{NC}$ (yrs) | ENTER Exposure duration, ED (yrs) | ENTER Exposure frequency, EF (days/yr) | ENTER Exposure Time ET (hrs/day) | ENTER Air Exchange Rate ACH $(hour)^{-1}$ |
|---|---|---|---|---|---|---|
| NEW=> Commercial | 70 | 25 | 25 | 250 | 8 | 1 |
| | | | | | (NEW) | (NEW) |

END

## Toluene

| Diffusivity in air, $D_a$ ($cm^2/s$) | Diffusivity in water, $D_w$ ($cm^2/s$) | Henry's law constant at reference temperature, H (atm-$m^3$/mol) | Henry's law constant reference temperature, $T_R$ ($^oC$) | Enthalpy of vaporization at the normal boiling point, $\Delta H_{v,b}$ (cal/mol) | Normal boiling point, $T_B$ ($^oK$) | Critical temperature, $T_C$ ($^oK$) | Unit risk factor, URF ($\mu g/m^3)^{-1}$ | Reference conc., RfC ($mg/m^3$) | Molecular weight, MW (g/mol) |
|---|---|---|---|---|---|---|---|---|---|
| 7.78E-02 | 9.20E-06 | 6.64E-03 | 25 | 7,930 | 383.78 | 591.79 | 0.0E+00 | 3.0E-01 | 92.14 |

**END**

INTERMEDIATE CALCULATIONS SHEET

**Scenario:** **Commercial**

**Chemical:** **Toluene**

| Source-building separation, $L_T$ (cm) | Vadose zone soil air-filled porosity, $\theta_a^V$ ($cm^3/cm^3$) | Vadose zone effective total fluid saturation, $S_{te}$ ($cm^3/cm^3$) | Vadose zone soil intrinsic permeability, $k_i$ ($cm^2$) | Vadose zone soil relative air permeability, $k_{rg}$ ($cm^2$) | Vadose zone soil effective vapor permeability, $k_v$ ($cm^2$) | Floor-wall seam perimeter, $X_{crack}$ (cm) | Soil gas conc. ($\mu g/m^3$) | Bldg. ventilation rate, $Q_{building}$ ($cm^3/s$) |
|---|---|---|---|---|---|---|---|---|
| 899 | 0.259 | 0.307 | 2.89E-09 | 0.798 | 2.30E-09 | 4,000 | 8.80E+01 | 6.78E+04 |

| Area of enclosed space below grade, $A_B$ ($cm^2$) | Crack-to-total area ratio, $\eta$ (unitless) | Crack depth below grade, $Z_{crack}$ (cm) | Enthalpy of vaporization at ave. soil temperature, $\Delta H_{v,TS}$ (cal/mol) | Henry's law constant at ave. soil temperature, $H_{TS}$ (atm-$m^3$/mol) | Henry's law constant at ave. soil temperature, $H'_{TS}$ (unitless) | Vapor viscosity at ave. soil temperature, $\mu_{TS}$ (g/cm-s) | Vadose zone effective diffusion coefficient, $D^{eff}_V$ ($cm^2/s$) | Diffusion path length, $L_d$ (cm) |
|---|---|---|---|---|---|---|---|---|
| 1.00E+06 | 5.00E-03 | 15 | 9,001 | 6.31E-03 | 2.59E-01 | 1.80E-04 | 4.49E-03 | 899 |

| Convection path length, $L_p$ (cm) | Source vapor conc., $C_{source}$ ($\mu g/m^3$) | Crack radius, $r_{crack}$ (cm) | Average vapor flow rate into bldg., $Q_{soil}$ ($cm^3/s$) | Crack effective diffusion coefficient, $D^{crack}$ ($cm^2/s$) | Area of crack, $A_{crack}$ ($cm^2$) | Exponent of equivalent foundation Peclet number, $exp(Pe^f)$ (unitless) | Infinite source indoor attenuation coefficient, $\alpha$ (unitless) | Infinite source bldg. conc., $C_{building}$ ($\mu g/m^3$) |
|---|---|---|---|---|---|---|---|---|
| 15 | 8.80E+01 | 1.25 | 8.33E+01 | 4.49E-03 | 5.00E+03 | 1.30E+16 | **6.95E-05** | 6.12E-03 |

| Unit risk factor, URF $(\mu g/m^3)^{-1}$ | Reference conc., RfC ($mg/m^3$) |
|---|---|
| NA | 3.0E-01 |

**END**

**Scenario:** **Commercial**
**Chemical:** **Toluene**

INCREMENTAL RISK CALCULATIONS:

| Incremental risk from vapor intrusion to indoor air, carcinogen (unitless) | Hazard quotient from vapor intrusion to indoor air, noncarcinogen (unitless) |
|---|---|
| **NA** | **4.7E-06** |

**MESSAGE SUMMARY BELOW:**

**END**

USEPA SG-SCREEN
Version 2.0, 04/2003

DTSC Modification
December 2014

# Department of Toxic Substances Control
# Vapor Intrusion Screening Model - Soil Gas

DATA ENTRY SHEET

**Scenario:** Residential
**Chemical:** Toluene

| Results Summary | | | | |
|---|---|---|---|---|
| Soil Gas Conc. ($\mu g/m^3$) | Attenuation Factor (unitless) | Indoor Air Conc. ($\mu g/m^3$) | Cancer Risk | Noncancer Hazard |
| 2.20E+01 | 6.9E-04 | 1.5E-02 | NA | 4.9E-05 |

Reset to Defaults

Soil Gas Concentration Data

| ENTER Chemical CAS No. (numbers only, no dashes) | ENTER Soil gas conc., $C_g$ ($\mu g/m^3$) | OR | ENTER Soil gas conc., $C_g$ (ppmv) | Chemical |
|---|---|---|---|---|
| 108883 | 2.20E+01 | | | Toluene |

MORE ↓

| ENTER Depth below grade to bottom of enclosed space floor, $L_F$ (15 or 200 cm) | ENTER Soil gas sampling depth below grade, $L_s$ (cm) | ENTER Average soil temperature, $T_S$ ($^oC$) | ENTER Vadose zone SCS soil type (used to estimate soil vapor permeability) | OR | ENTER User-defined vadose zone soil vapor permeability, $k_v$ ($cm^2$) |
|---|---|---|---|---|---|
| 15 | 152 | 24 | SIL | | |

MORE ↓

| ENTER Vandose zone SCS soil type (Lookup Soil Parameters) | ENTER Vadose zone soil dry bulk density, $\rho_b^A$ ($g/cm^3$) | ENTER Vadose zone soil total porosity, $n^V$ (unitless) | ENTER Vadose zone soil water-filled porosity, $\theta_w^V$ ($cm^3/cm^3$) | ENTER Average vapor flow rate into bldg. (Leave blank to calculate) $Q_{soil}$ (L/m) |
|---|---|---|---|---|
| SIL | 1.49 | 0.439 | 0.18 | 5 |

MORE ↓

Lookup Receptor Parameters

| | ENTER Averaging time for carcinogens, $AT_C$ (yrs) | ENTER Averaging time for noncarcinogens, $AT_{NC}$ (yrs) | ENTER Exposure duration, ED (yrs) | ENTER Exposure frequency, EF (days/yr) | ENTER Exposure Time ET (hrs/day) | ENTER Air Exchange Rate ACH $(hour)^{-1}$ |
|---|---|---|---|---|---|---|
| NEW=> Residential | 70 | 26 | 26 | 350 | 24 | 0.5 |
| | | | | | (NEW) | (NEW) |

END

## Toluene

| Diffusivity in air, $D_a$ ($cm^2/s$) | Diffusivity in water, $D_w$ ($cm^2/s$) | Henry's law constant at reference temperature, H (atm-$m^3$/mol) | Henry's law constant reference temperature, $T_R$ ($^oC$) | Enthalpy of vaporization at the normal boiling point, $\Delta H_{v,b}$ (cal/mol) | Normal boiling point, $T_B$ ($^oK$) | Critical temperature, $T_C$ ($^oK$) | Unit risk factor, URF ($\mu g/m^3)^{-1}$ | Reference conc., RfC ($mg/m^3$) | Molecular weight, MW (g/mol) |
|---|---|---|---|---|---|---|---|---|---|
| 7.78E-02 | 9.20E-06 | 6.64E-03 | 25 | 7,930 | 383.78 | 591.79 | 0.0E+00 | 3.0E-01 | 92.14 |

**END**

INTERMEDIATE CALCULATIONS SHEET

**Scenario:** **Residential**

**Chemical:** **Toluene**

| Source-building separation, $L_T$ (cm) | Vadose zone soil air-filled porosity, $\theta_a^V$ ($cm^3/cm^3$) | Vadose zone effective total fluid saturation, $S_{te}$ ($cm^3/cm^3$) | Vadose zone soil intrinsic permeability, $k_i$ ($cm^2$) | Vadose zone soil relative air permeability, $k_{rg}$ ($cm^2$) | Vadose zone soil effective vapor permeability, $k_v$ ($cm^2$) | Floor-wall seam perimeter, $X_{crack}$ (cm) | Soil gas conc. ($\mu g/m^3$) | Bldg. ventilation rate, $Q_{building}$ ($cm^3/s$) |
|---|---|---|---|---|---|---|---|---|
| 137 | 0.259 | 0.307 | 2.89E-09 | 0.798 | 2.30E-09 | 4,000 | 2.20E+01 | 3.39E+04 |

| Area of enclosed space below grade, $A_B$ ($cm^2$) | Crack-to-total area ratio, $\eta$ (unitless) | Crack depth below grade, $Z_{crack}$ (cm) | Enthalpy of vaporization at ave. soil temperature, $\Delta H_{v,TS}$ (cal/mol) | Henry's law constant at ave. soil temperature, $H_{TS}$ (atm-$m^3$/mol) | Henry's law constant at ave. soil temperature, $H'_{TS}$ (unitless) | Vapor viscosity at ave. soil temperature, $\mu_{TS}$ (g/cm-s) | Vadose zone effective diffusion coefficient, $D^{eff}_V$ ($cm^2/s$) | Diffusion path length, $L_d$ (cm) |
|---|---|---|---|---|---|---|---|---|
| 1.00E+06 | 5.00E-03 | 15 | 9,001 | 6.31E-03 | 2.59E-01 | 1.80E-04 | 4.49E-03 | 137 |

| Convection path length, $L_p$ (cm) | Source vapor conc., $C_{source}$ ($\mu g/m^3$) | Crack radius, $r_{crack}$ (cm) | Average vapor flow rate into bldg., $Q_{soil}$ ($cm^3/s$) | Crack effective diffusion coefficient, $D^{crack}$ ($cm^2/s$) | Area of crack, $A_{crack}$ ($cm^2$) | Exponent of equivalent foundation Peclet number, $exp(Pe^f)$ (unitless) | Infinite source indoor attenuation coefficient, $\alpha$ (unitless) | Infinite source bldg. conc., $C_{building}$ ($\mu g/m^3$) |
|---|---|---|---|---|---|---|---|---|
| 15 | 2.20E+01 | 1.25 | 8.33E+01 | 4.49E-03 | 5.00E+03 | 1.30E+16 | **6.94E-04** | 1.53E-02 |

| Unit risk factor, URF $(\mu g/m^3)^{-1}$ | Reference conc., RfC ($mg/m^3$) |
|---|---|
| NA | 3.0E-01 |

**END**

**Scenario:** **Residential**
**Chemical:** **Toluene**

INCREMENTAL RISK CALCULATIONS:

| Incremental risk from vapor intrusion to indoor air, carcinogen (unitless) | Hazard quotient from vapor intrusion to indoor air, noncarcinogen (unitless) |
|---|---|
| **NA** | **4.9E-05** |

**MESSAGE SUMMARY BELOW:**

**END**

USEPA SG-SCREEN
Version 2.0, 04/2003

DTSC Modification
December 2014

# Department of Toxic Substances Control
# Vapor Intrusion Screening Model - Soil Gas

DATA ENTRY SHEET

**Scenario:** Commercial
**Chemical:** Toluene

| Results Summary | | | | |
|---|---|---|---|---|
| Soil Gas Conc. ($\mu g/m^3$) | Attenuation Factor (unitless) | Indoor Air Conc. ($\mu g/m^3$) | Cancer Risk | Noncancer Hazard |
| 2.20E+01 | 3.5E-04 | 7.6E-03 | NA | 5.8E-06 |

Reset to Defaults

Soil Gas Concentration Data

| ENTER Chemical CAS No. (numbers only, no dashes) | ENTER Soil gas conc., $C_g$ ($\mu g/m^3$) | OR | ENTER Soil gas conc., $C_g$ (ppmv) | Chemical |
|---|---|---|---|---|
| 108883 | 2.20E+01 | | | Toluene |

MORE ↓

| ENTER Depth below grade to bottom of enclosed space floor, $L_F$ (15 or 200 cm) | ENTER Soil gas sampling depth below grade, $L_s$ (cm) | ENTER Average soil temperature, $T_S$ ($^oC$) | ENTER Vadose zone SCS soil type (used to estimate soil vapor permeability) | OR | ENTER User-defined vadose zone soil vapor permeability, $k_v$ ($cm^2$) |
|---|---|---|---|---|---|
| 15 | 152 | 24 | SIL | | |

MORE ↓

| ENTER Vandose zone SCS soil type (Lookup Soil Parameters) | ENTER Vadose zone soil dry bulk density, $\rho_b^A$ ($g/cm^3$) | ENTER Vadose zone soil total porosity, $n^V$ (unitless) | ENTER Vadose zone soil water-filled porosity, $\theta_w^V$ ($cm^3/cm^3$) | ENTER Average vapor flow rate into bldg. (Leave blank to calculate) $Q_{soil}$ (L/m) |
|---|---|---|---|---|
| SIL | 1.49 | 0.439 | 0.18 | 5 |

MORE ↓

Lookup Receptor Parameters

| | ENTER Averaging time for carcinogens, $AT_C$ (yrs) | ENTER Averaging time for noncarcinogens, $AT_{NC}$ (yrs) | ENTER Exposure duration, ED (yrs) | ENTER Exposure frequency, EF (days/yr) | ENTER Exposure Time ET (hrs/day) | ENTER Air Exchange Rate ACH $(hour)^{-1}$ |
|---|---|---|---|---|---|---|
| NEW=> Commercial | 70 | 25 | 25 | 250 | 8 | 1 |
| | | | | | (NEW) | (NEW) |

END

## Toluene

| Diffusivity in air, $D_a$ ($cm^2/s$) | Diffusivity in water, $D_w$ ($cm^2/s$) | Henry's law constant at reference temperature, H (atm-$m^3$/mol) | Henry's law constant reference temperature, $T_R$ ($^oC$) | Enthalpy of vaporization at the normal boiling point, $\Delta H_{v,b}$ (cal/mol) | Normal boiling point, $T_B$ ($^oK$) | Critical temperature, $T_C$ ($^oK$) | Unit risk factor, URF ($\mu g/m^3)^{-1}$ | Reference conc., RfC ($mg/m^3$) | Molecular weight, MW (g/mol) |
|---|---|---|---|---|---|---|---|---|---|
| 7.78E-02 | 9.20E-06 | 6.64E-03 | 25 | 7,930 | 383.78 | 591.79 | 0.0E+00 | 3.0E-01 | 92.14 |

**END**

INTERMEDIATE CALCULATIONS SHEET

**Scenario:** **Commercial**

**Chemical:** **Toluene**

| Source-building separation, $L_T$ (cm) | Vadose zone soil air-filled porosity, $\theta_a^V$ ($cm^3/cm^3$) | Vadose zone effective total fluid saturation, $S_{te}$ ($cm^3/cm^3$) | Vadose zone soil intrinsic permeability, $k_i$ ($cm^2$) | Vadose zone soil relative air permeability, $k_{rg}$ ($cm^2$) | Vadose zone soil effective vapor permeability, $k_v$ ($cm^2$) | Floor-wall seam perimeter, $X_{crack}$ (cm) | Soil gas conc. ($\mu g/m^3$) | Bldg. ventilation rate, $Q_{building}$ ($cm^3/s$) |
|---|---|---|---|---|---|---|---|---|
| 137 | 0.259 | 0.307 | 2.89E-09 | 0.798 | 2.30E-09 | 4,000 | 2.20E+01 | 6.78E+04 |

| Area of enclosed space below grade, $A_B$ ($cm^2$) | Crack-to-total area ratio, $\eta$ (unitless) | Crack depth below grade, $Z_{crack}$ (cm) | Enthalpy of vaporization at ave. soil temperature, $\Delta H_{v,TS}$ (cal/mol) | Henry's law constant at ave. soil temperature, $H_{TS}$ (atm-$m^3$/mol) | Henry's law constant at ave. soil temperature, $H'_{TS}$ (unitless) | Vapor viscosity at ave. soil temperature, $\mu_{TS}$ (g/cm-s) | Vadose zone effective diffusion coefficient, $D^{eff}_V$ ($cm^2/s$) | Diffusion path length, $L_d$ (cm) |
|---|---|---|---|---|---|---|---|---|
| 1.00E+06 | 5.00E-03 | 15 | 9,001 | 6.31E-03 | 2.59E-01 | 1.80E-04 | 4.49E-03 | 137 |

| Convection path length, $L_p$ (cm) | Source vapor conc., $C_{source}$ ($\mu g/m^3$) | Crack radius, $r_{crack}$ (cm) | Average vapor flow rate into bldg., $Q_{soil}$ ($cm^3/s$) | Crack effective diffusion coefficient, $D^{crack}$ ($cm^2/s$) | Area of crack, $A_{crack}$ ($cm^2$) | Exponent of equivalent foundation Peclet number, $exp(Pe^f)$ (unitless) | Infinite source indoor attenuation coefficient, $\alpha$ (unitless) | Infinite source bldg. conc., $C_{building}$ ($\mu g/m^3$) |
|---|---|---|---|---|---|---|---|---|
| 15 | 2.20E+01 | 1.25 | 8.33E+01 | 4.49E-03 | 5.00E+03 | 1.30E+16 | **3.47E-04** | 7.64E-03 |

| Unit risk factor, URF $(\mu g/m^3)^{-1}$ | Reference conc., RfC ($mg/m^3$) |
|---|---|
| NA | 3.0E-01 |

**END**

**Scenario:** **Commercial**
**Chemical:** **Toluene**

INCREMENTAL RISK CALCULATIONS:

| Incremental risk from vapor intrusion to indoor air, carcinogen (unitless) | Hazard quotient from vapor intrusion to indoor air, noncarcinogen (unitless) |
|---|---|
| **NA** | **5.8E-06** |

**MESSAGE SUMMARY BELOW:**

**END**

USEPA SG-SCREEN
Version 2.0, 04/2003

DTSC Modification
December 2014

# Department of Toxic Substances Control
# Vapor Intrusion Screening Model - Soil Gas

DATA ENTRY SHEET

**Scenario:** Residential
**Chemical:** Toluene

| Results Summary | | | | |
|---|---|---|---|---|
| Soil Gas Conc. ($\mu g/m^3$) | Attenuation Factor (unitless) | Indoor Air Conc. ($\mu g/m^3$) | Cancer Risk | Noncancer Hazard |
| 2.90E+02 | 2.7E-04 | 7.8E-02 | NA | 2.5E-04 |

Reset to Defaults

Soil Gas Concentration Data

| ENTER Chemical CAS No. (numbers only, no dashes) | ENTER Soil gas conc., $C_g$ ($\mu g/m^3$) | OR | ENTER Soil gas conc., $C_g$ (ppmv) | Chemical |
|---|---|---|---|---|
| 108883 | 2.90E+02 | | | Toluene |

MORE ↓

| ENTER Depth below grade to bottom of enclosed space floor, $L_F$ (15 or 200 cm) | ENTER Soil gas sampling depth below grade, $L_s$ (cm) | ENTER Average soil temperature, $T_S$ ($^oC$) | ENTER Vadose zone SCS soil type (used to estimate soil vapor permeability) | OR | ENTER User-defined vadose zone soil vapor permeability, $k_v$ ($cm^2$) |
|---|---|---|---|---|---|
| 15 | 457 | 24 | SIL | | |

MORE ↓

| ENTER Vandose zone SCS soil type (Lookup Soil Parameters) | ENTER Vadose zone soil dry bulk density, $\rho_b^A$ ($g/cm^3$) | ENTER Vadose zone soil total porosity, $n^V$ (unitless) | ENTER Vadose zone soil water-filled porosity, $\theta_w^V$ ($cm^3/cm^3$) | ENTER Average vapor flow rate into bldg. (Leave blank to calculate) $Q_{soil}$ (L/m) |
|---|---|---|---|---|
| SIL | 1.49 | 0.439 | 0.18 | 5 |

MORE ↓

Lookup Receptor Parameters

| | ENTER Averaging time for carcinogens, $AT_C$ (yrs) | ENTER Averaging time for noncarcinogens, $AT_{NC}$ (yrs) | ENTER Exposure duration, ED (yrs) | ENTER Exposure frequency, EF (days/yr) | ENTER Exposure Time ET (hrs/day) | ENTER Air Exchange Rate ACH $(hour)^{-1}$ |
|---|---|---|---|---|---|---|
| NEW=> Residential | 70 | 26 | 26 | 350 | 24 | 0.5 |
| | | | | | (NEW) | (NEW) |

END

## Toluene

| Diffusivity in air, $D_a$ ($cm^2/s$) | Diffusivity in water, $D_w$ ($cm^2/s$) | Henry's law constant at reference temperature, H (atm-$m^3$/mol) | Henry's law constant reference temperature, $T_R$ ($^oC$) | Enthalpy of vaporization at the normal boiling point, $\Delta H_{v,b}$ (cal/mol) | Normal boiling point, $T_B$ ($^oK$) | Critical temperature, $T_C$ ($^oK$) | Unit risk factor, URF ($\mu g/m^3)^{-1}$ | Reference conc., RfC ($mg/m^3$) | Molecular weight, MW (g/mol) |
|---|---|---|---|---|---|---|---|---|---|
| 7.78E-02 | 9.20E-06 | 6.64E-03 | 25 | 7,930 | 383.78 | 591.79 | 0.0E+00 | 3.0E-01 | 92.14 |

**END**

INTERMEDIATE CALCULATIONS SHEET

**Scenario:** **Residential**

**Chemical:** **Toluene**

| Source-building separation, $L_T$ (cm) | Vadose zone soil air-filled porosity, $\theta_a^V$ ($cm^3/cm^3$) | Vadose zone effective total fluid saturation, $S_{te}$ ($cm^3/cm^3$) | Vadose zone soil intrinsic permeability, $k_i$ ($cm^2$) | Vadose zone soil relative air permeability, $k_{rg}$ ($cm^2$) | Vadose zone soil effective vapor permeability, $k_v$ ($cm^2$) | Floor-wall seam perimeter, $X_{crack}$ (cm) | Soil gas conc. ($\mu g/m^3$) | Bldg. ventilation rate, $Q_{building}$ ($cm^3/s$) |
|---|---|---|---|---|---|---|---|---|
| 442 | 0.259 | 0.307 | 2.89E-09 | 0.798 | 2.30E-09 | 4,000 | 2.90E+02 | 3.39E+04 |

| Area of enclosed space below grade, $A_B$ ($cm^2$) | Crack-to-total area ratio, $\eta$ (unitless) | Crack depth below grade, $Z_{crack}$ (cm) | Enthalpy of vaporization at ave. soil temperature, $\Delta H_{v,TS}$ (cal/mol) | Henry's law constant at ave. soil temperature, $H_{TS}$ (atm-$m^3$/mol) | Henry's law constant at ave. soil temperature, $H'_{TS}$ (unitless) | Vapor viscosity at ave. soil temperature, $\mu_{TS}$ (g/cm-s) | Vadose zone effective diffusion coefficient, $D^{eff}_V$ ($cm^2/s$) | Diffusion path length, $L_d$ (cm) |
|---|---|---|---|---|---|---|---|---|
| 1.00E+06 | 5.00E-03 | 15 | 9,001 | 6.31E-03 | 2.59E-01 | 1.80E-04 | 4.49E-03 | 442 |

| Convection path length, $L_p$ (cm) | Source vapor conc., $C_{source}$ ($\mu g/m^3$) | Crack radius, $r_{crack}$ (cm) | Average vapor flow rate into bldg., $Q_{soil}$ ($cm^3/s$) | Crack effective diffusion coefficient, $D^{crack}$ ($cm^2/s$) | Area of crack, $A_{crack}$ ($cm^2$) | Exponent of equivalent foundation Peclet number, $exp(Pe^f)$ (unitless) | Infinite source indoor attenuation coefficient, $\alpha$ (unitless) | Infinite source bldg. conc., $C_{building}$ ($\mu g/m^3$) |
|---|---|---|---|---|---|---|---|---|
| 15 | 2.90E+02 | 1.25 | 8.33E+01 | 4.49E-03 | 5.00E+03 | 1.30E+16 | **2.67E-04** | 7.75E-02 |

| Unit risk factor, URF $(\mu g/m^3)^{-1}$ | Reference conc., RfC ($mg/m^3$) |
|---|---|
| NA | 3.0E-01 |

**END**

**Scenario:** **Residential**
**Chemical:** **Toluene**

INCREMENTAL RISK CALCULATIONS:

| Incremental risk from vapor intrusion to indoor air, carcinogen (unitless) | Hazard quotient from vapor intrusion to indoor air, noncarcinogen (unitless) |
|---|---|
| **NA** | **2.5E-04** |

**MESSAGE SUMMARY BELOW:**

**END**

USEPA SG-SCREEN
Version 2.0, 04/2003

DTSC Modification
December 2014

# Department of Toxic Substances Control
# Vapor Intrusion Screening Model - Soil Gas

DATA ENTRY SHEET

**Scenario:** Commercial
**Chemical:** Toluene

| Results Summary | | | | |
|---|---|---|---|---|
| Soil Gas Conc. ($\mu g/m^3$) | Attenuation Factor (unitless) | Indoor Air Conc. ($\mu g/m^3$) | Cancer Risk | Noncancer Hazard |
| 2.90E+02 | 1.3E-04 | 3.9E-02 | NA | 2.9E-05 |

Reset to Defaults

Soil Gas Concentration Data

| ENTER Chemical CAS No. (numbers only, no dashes) | ENTER Soil gas conc., $C_g$ ($\mu g/m^3$) | OR | ENTER Soil gas conc., $C_g$ (ppmv) | Chemical |
|---|---|---|---|---|
| 108883 | 2.90E+02 | | | Toluene |

MORE ↓

| ENTER Depth below grade to bottom of enclosed space floor, $L_F$ (15 or 200 cm) | ENTER Soil gas sampling depth below grade, $L_s$ (cm) | ENTER Average soil temperature, $T_S$ ($^oC$) | ENTER Vadose zone SCS soil type (used to estimate soil vapor permeability) | OR | ENTER User-defined vadose zone soil vapor permeability, $k_v$ ($cm^2$) |
|---|---|---|---|---|---|
| 15 | 457 | 24 | SIL | | |

MORE ↓

| ENTER Vandose zone SCS soil type (Lookup Soil Parameters) | ENTER Vadose zone soil dry bulk density, $\rho_b^A$ ($g/cm^3$) | ENTER Vadose zone soil total porosity, $n^V$ (unitless) | ENTER Vadose zone soil water-filled porosity, $\theta_w^V$ ($cm^3/cm^3$) | ENTER Average vapor flow rate into bldg. (Leave blank to calculate) $Q_{soil}$ (L/m) |
|---|---|---|---|---|
| SIL | 1.49 | 0.439 | 0.18 | 5 |

MORE ↓

Lookup Receptor Parameters

| | ENTER Averaging time for carcinogens, $AT_C$ (yrs) | ENTER Averaging time for noncarcinogens, $AT_{NC}$ (yrs) | ENTER Exposure duration, ED (yrs) | ENTER Exposure frequency, EF (days/yr) | ENTER Exposure Time ET (hrs/day) | ENTER Air Exchange Rate ACH $(hour)^{-1}$ |
|---|---|---|---|---|---|---|
| NEW=> Commercial | 70 | 25 | 25 | 250 | 8 | 1 |
| | | | | | (NEW) | (NEW) |

END

## Toluene

| Diffusivity in air, $D_a$ ($cm^2/s$) | Diffusivity in water, $D_w$ ($cm^2/s$) | Henry's law constant at reference temperature, H (atm-$m^3$/mol) | Henry's law constant reference temperature, $T_R$ ($^oC$) | Enthalpy of vaporization at the normal boiling point, $\Delta H_{v,b}$ (cal/mol) | Normal boiling point, $T_B$ ($^oK$) | Critical temperature, $T_C$ ($^oK$) | Unit risk factor, URF ($\mu g/m^3)^{-1}$ | Reference conc., RfC ($mg/m^3$) | Molecular weight, MW (g/mol) |
|---|---|---|---|---|---|---|---|---|---|
| 7.78E-02 | 9.20E-06 | 6.64E-03 | 25 | 7,930 | 383.78 | 591.79 | 0.0E+00 | 3.0E-01 | 92.14 |

**END**

**Scenario:** **Commercial**

**Chemical:** **Toluene**

| Source-building separation, $L_T$ (cm) | Vadose zone soil air-filled porosity, $\theta_a^V$ ($cm^3/cm^3$) | Vadose zone effective total fluid saturation, $S_{te}$ ($cm^3/cm^3$) | Vadose zone soil intrinsic permeability, $k_i$ ($cm^2$) | Vadose zone soil relative air permeability, $k_{rg}$ ($cm^2$) | Vadose zone soil effective vapor permeability, $k_v$ ($cm^2$) | Floor-wall seam perimeter, $X_{crack}$ (cm) | Soil gas conc. ($\mu g/m^3$) | Bldg. ventilation rate, $Q_{building}$ ($cm^3/s$) |
|---|---|---|---|---|---|---|---|---|
| 442 | 0.259 | 0.307 | 2.89E-09 | 0.798 | 2.30E-09 | 4,000 | 2.90E+02 | 6.78E+04 |

| Area of enclosed space below grade, $A_B$ ($cm^2$) | Crack-to-total area ratio, $\eta$ (unitless) | Crack depth below grade, $Z_{crack}$ (cm) | Enthalpy of vaporization at ave. soil temperature, $\Delta H_{v,TS}$ (cal/mol) | Henry's law constant at ave. soil temperature, $H_{TS}$ (atm-$m^3$/mol) | Henry's law constant at ave. soil temperature, $H'_{TS}$ (unitless) | Vapor viscosity at ave. soil temperature, $\mu_{TS}$ (g/cm-s) | Vadose zone effective diffusion coefficient, $D^{eff}_V$ ($cm^2/s$) | Diffusion path length, $L_d$ (cm) |
|---|---|---|---|---|---|---|---|---|
| 1.00E+06 | 5.00E-03 | 15 | 9,001 | 6.31E-03 | 2.59E-01 | 1.80E-04 | 4.49E-03 | 442 |

| Convection path length, $L_p$ (cm) | Source vapor conc., $C_{source}$ ($\mu g/m^3$) | Crack radius, $r_{crack}$ (cm) | Average vapor flow rate into bldg., $Q_{soil}$ ($cm^3/s$) | Crack effective diffusion coefficient, $D^{crack}$ ($cm^2/s$) | Area of crack, $A_{crack}$ ($cm^2$) | Exponent of equivalent foundation Peclet number, $exp(Pe^f)$ (unitless) | Infinite source indoor attenuation coefficient, $\alpha$ (unitless) | Infinite source bldg. conc., $C_{building}$ ($\mu g/m^3$) |
|---|---|---|---|---|---|---|---|---|
| 15 | 2.90E+02 | 1.25 | 8.33E+01 | 4.49E-03 | 5.00E+03 | 1.30E+16 | **1.34E-04** | 3.88E-02 |

| Unit risk factor, URF $(\mu g/m^3)^{-1}$ | Reference conc., RfC ($mg/m^3$) |
|---|---|
| NA | 3.0E-01 |

**END**

**Scenario:** **Commercial**
**Chemical:** **Toluene**

INCREMENTAL RISK CALCULATIONS:

| Incremental risk from vapor intrusion to indoor air, carcinogen (unitless) | Hazard quotient from vapor intrusion to indoor air, noncarcinogen (unitless) |
|---|---|
| **NA** | **2.9E-05** |

**MESSAGE SUMMARY BELOW:**

**END**

USEPA SG-SCREEN
Version 2.0, 04/2003

DTSC Modification
December 2014

# Department of Toxic Substances Control
# Vapor Intrusion Screening Model - Soil Gas

DATA ENTRY SHEET

**Scenario:** Residential
**Chemical:** Toluene

| Results Summary | | | | |
|---|---|---|---|---|
| Soil Gas Conc. ($\mu g/m^3$) | Attenuation Factor (unitless) | Indoor Air Conc. ($\mu g/m^3$) | Cancer Risk | Noncancer Hazard |
| 2.10E+01 | 6.9E-04 | 1.5E-02 | NA | 4.7E-05 |

Reset to Defaults

Soil Gas Concentration Data

| ENTER Chemical CAS No. (numbers only, no dashes) | ENTER Soil gas conc., $C_g$ ($\mu g/m^3$) | OR | ENTER Soil gas conc., $C_g$ (ppmv) | Chemical |
|---|---|---|---|---|
| 108883 | 2.10E+01 | | | Toluene |

MORE ↓

| ENTER Depth below grade to bottom of enclosed space floor, $L_F$ (15 or 200 cm) | ENTER Soil gas sampling depth below grade, $L_s$ (cm) | ENTER Average soil temperature, $T_S$ ($^oC$) | ENTER Vadose zone SCS soil type (used to estimate soil vapor permeability) | OR | ENTER User-defined vadose zone soil vapor permeability, $k_v$ ($cm^2$) |
|---|---|---|---|---|---|
| 15 | 152 | 24 | SIL | | |

MORE ↓

| ENTER Vandose zone SCS soil type (Lookup Soil Parameters) | ENTER Vadose zone soil dry bulk density, $\rho_b^A$ ($g/cm^3$) | ENTER Vadose zone soil total porosity, $n^V$ (unitless) | ENTER Vadose zone soil water-filled porosity, $\theta_w^V$ ($cm^3/cm^3$) | ENTER Average vapor flow rate into bldg. (Leave blank to calculate) $Q_{soil}$ (L/m) |
|---|---|---|---|---|
| SIL | 1.49 | 0.439 | 0.18 | 5 |

MORE ↓

Lookup Receptor Parameters

| | ENTER Averaging time for carcinogens, $AT_C$ (yrs) | ENTER Averaging time for noncarcinogens, $AT_{NC}$ (yrs) | ENTER Exposure duration, ED (yrs) | ENTER Exposure frequency, EF (days/yr) | ENTER Exposure Time ET (hrs/day) | ENTER Air Exchange Rate ACH $(hour)^{-1}$ |
|---|---|---|---|---|---|---|
| NEW=> Residential | 70 | 26 | 26 | 350 | 24 | 0.5 |
| | | | | | (NEW) | (NEW) |

END

## Toluene

| Diffusivity in air, $D_a$ ($cm^2/s$) | Diffusivity in water, $D_w$ ($cm^2/s$) | Henry's law constant at reference temperature, H (atm-$m^3$/mol) | Henry's law constant reference temperature, $T_R$ ($^oC$) | Enthalpy of vaporization at the normal boiling point, $\Delta H_{v,b}$ (cal/mol) | Normal boiling point, $T_B$ ($^oK$) | Critical temperature, $T_C$ ($^oK$) | Unit risk factor, URF ($\mu g/m^3)^{-1}$ | Reference conc., RfC ($mg/m^3$) | Molecular weight, MW (g/mol) |
|---|---|---|---|---|---|---|---|---|---|
| 7.78E-02 | 9.20E-06 | 6.64E-03 | 25 | 7,930 | 383.78 | 591.79 | 0.0E+00 | 3.0E-01 | 92.14 |

**END**

INTERMEDIATE CALCULATIONS SHEET

**Scenario:** **Residential**

**Chemical:** **Toluene**

| Source-building separation, $L_T$ (cm) | Vadose zone soil air-filled porosity, $\theta_a^V$ ($cm^3/cm^3$) | Vadose zone effective total fluid saturation, $S_{te}$ ($cm^3/cm^3$) | Vadose zone soil intrinsic permeability, $k_i$ ($cm^2$) | Vadose zone soil relative air permeability, $k_{rg}$ ($cm^2$) | Vadose zone soil effective vapor permeability, $k_v$ ($cm^2$) | Floor-wall seam perimeter, $X_{crack}$ (cm) | Soil gas conc. ($\mu g/m^3$) | Bldg. ventilation rate, $Q_{building}$ ($cm^3/s$) |
|---|---|---|---|---|---|---|---|---|
| 137 | 0.259 | 0.307 | 2.89E-09 | 0.798 | 2.30E-09 | 4,000 | 2.10E+01 | 3.39E+04 |

| Area of enclosed space below grade, $A_B$ ($cm^2$) | Crack-to-total area ratio, $\eta$ (unitless) | Crack depth below grade, $Z_{crack}$ (cm) | Enthalpy of vaporization at ave. soil temperature, $\Delta H_{v,TS}$ (cal/mol) | Henry's law constant at ave. soil temperature, $H_{TS}$ (atm-$m^3$/mol) | Henry's law constant at ave. soil temperature, $H'_{TS}$ (unitless) | Vapor viscosity at ave. soil temperature, $\mu_{TS}$ (g/cm-s) | Vadose zone effective diffusion coefficient, $D^{eff}_V$ ($cm^2/s$) | Diffusion path length, $L_d$ (cm) |
|---|---|---|---|---|---|---|---|---|
| 1.00E+06 | 5.00E-03 | 15 | 9,001 | 6.31E-03 | 2.59E-01 | 1.80E-04 | 4.49E-03 | 137 |

| Convection path length, $L_p$ (cm) | Source vapor conc., $C_{source}$ ($\mu g/m^3$) | Crack radius, $r_{crack}$ (cm) | Average vapor flow rate into bldg., $Q_{soil}$ ($cm^3/s$) | Crack effective diffusion coefficient, $D^{crack}$ ($cm^2/s$) | Area of crack, $A_{crack}$ ($cm^2$) | Exponent of equivalent foundation Peclet number, $exp(Pe^f)$ (unitless) | Infinite source indoor attenuation coefficient, $\alpha$ (unitless) | Infinite source bldg. conc., $C_{building}$ ($\mu g/m^3$) |
|---|---|---|---|---|---|---|---|---|
| 15 | 2.10E+01 | 1.25 | 8.33E+01 | 4.49E-03 | 5.00E+03 | 1.30E+16 | **6.94E-04** | 1.46E-02 |

| Unit risk factor, URF $(\mu g/m^3)^{-1}$ | Reference conc., RfC ($mg/m^3$) |
|---|---|
| NA | 3.0E-01 |

**END**

**Scenario:** **Residential**
**Chemical:** **Toluene**

INCREMENTAL RISK CALCULATIONS:

| Incremental risk from vapor intrusion to indoor air, carcinogen (unitless) | Hazard quotient from vapor intrusion to indoor air, noncarcinogen (unitless) |
|---|---|
| **NA** | **4.7E-05** |

**MESSAGE SUMMARY BELOW:**

**END**

USEPA SG-SCREEN
Version 2.0, 04/2003

DTSC Modification
December 2014

# Department of Toxic Substances Control
# Vapor Intrusion Screening Model - Soil Gas

DATA ENTRY SHEET

**Scenario:** Commercial
**Chemical:** Toluene

| Results Summary | | | | |
|---|---|---|---|---|
| Soil Gas Conc. ($\mu g/m^3$) | Attenuation Factor (unitless) | Indoor Air Conc. ($\mu g/m^3$) | Cancer Risk | Noncancer Hazard |
| 2.10E+01 | 3.5E-04 | 7.3E-03 | NA | 5.5E-06 |

Reset to Defaults

Soil Gas Concentration Data

| ENTER Chemical CAS No. (numbers only, no dashes) | ENTER Soil gas conc., $C_g$ ($\mu g/m^3$) | OR | ENTER Soil gas conc., $C_g$ (ppmv) | Chemical |
|---|---|---|---|---|
| 108883 | 2.10E+01 | | | Toluene |

MORE ↓

| ENTER Depth below grade to bottom of enclosed space floor, $L_F$ (15 or 200 cm) | ENTER Soil gas sampling depth below grade, $L_s$ (cm) | ENTER Average soil temperature, $T_S$ ($^oC$) | ENTER Vadose zone SCS soil type (used to estimate soil vapor permeability) | OR | ENTER User-defined vadose zone soil vapor permeability, $k_v$ ($cm^2$) |
|---|---|---|---|---|---|
| 15 | 152 | 24 | SIL | | |

MORE ↓

| ENTER Vandose zone SCS soil type (Lookup Soil Parameters) | ENTER Vadose zone soil dry bulk density, $\rho_b^A$ ($g/cm^3$) | ENTER Vadose zone soil total porosity, $n^V$ (unitless) | ENTER Vadose zone soil water-filled porosity, $\theta_w^V$ ($cm^3/cm^3$) | ENTER Average vapor flow rate into bldg. (Leave blank to calculate) $Q_{soil}$ (L/m) |
|---|---|---|---|---|
| SIL | 1.49 | 0.439 | 0.18 | 5 |

MORE ↓

Lookup Receptor Parameters

| | ENTER Averaging time for carcinogens, $AT_C$ (yrs) | ENTER Averaging time for noncarcinogens, $AT_{NC}$ (yrs) | ENTER Exposure duration, ED (yrs) | ENTER Exposure frequency, EF (days/yr) | ENTER Exposure Time ET (hrs/day) | ENTER Air Exchange Rate ACH $(hour)^{-1}$ |
|---|---|---|---|---|---|---|
| NEW=> Commercial | 70 | 25 | 25 | 250 | 8 | 1 |
| | | | | | (NEW) | (NEW) |

END

## Toluene

| Diffusivity in air, $D_a$ ($cm^2/s$) | Diffusivity in water, $D_w$ ($cm^2/s$) | Henry's law constant at reference temperature, H (atm-$m^3$/mol) | Henry's law constant reference temperature, $T_R$ ($^oC$) | Enthalpy of vaporization at the normal boiling point, $\Delta H_{v,b}$ (cal/mol) | Normal boiling point, $T_B$ ($^oK$) | Critical temperature, $T_C$ ($^oK$) | Unit risk factor, URF ($\mu g/m^3)^{-1}$ | Reference conc., RfC ($mg/m^3$) | Molecular weight, MW (g/mol) |
|---|---|---|---|---|---|---|---|---|---|
| 7.78E-02 | 9.20E-06 | 6.64E-03 | 25 | 7,930 | 383.78 | 591.79 | 0.0E+00 | 3.0E-01 | 92.14 |

**END**

INTERMEDIATE CALCULATIONS SHEET

**Scenario:** **Commercial**

**Chemical:** **Toluene**

| Source-building separation, $L_T$ (cm) | Vadose zone soil air-filled porosity, $\theta_a^V$ ($cm^3/cm^3$) | Vadose zone effective total fluid saturation, $S_{te}$ ($cm^3/cm^3$) | Vadose zone soil intrinsic permeability, $k_i$ ($cm^2$) | Vadose zone soil relative air permeability, $k_{rg}$ ($cm^2$) | Vadose zone soil effective vapor permeability, $k_v$ ($cm^2$) | Floor-wall seam perimeter, $X_{crack}$ (cm) | Soil gas conc. ($\mu g/m^3$) | Bldg. ventilation rate, $Q_{building}$ ($cm^3/s$) |
|---|---|---|---|---|---|---|---|---|
| 137 | 0.259 | 0.307 | 2.89E-09 | 0.798 | 2.30E-09 | 4,000 | 2.10E+01 | 6.78E+04 |

| Area of enclosed space below grade, $A_B$ ($cm^2$) | Crack-to-total area ratio, $\eta$ (unitless) | Crack depth below grade, $Z_{crack}$ (cm) | Enthalpy of vaporization at ave. soil temperature, $\Delta H_{v,TS}$ (cal/mol) | Henry's law constant at ave. soil temperature, $H_{TS}$ (atm-$m^3$/mol) | Henry's law constant at ave. soil temperature, $H'_{TS}$ (unitless) | Vapor viscosity at ave. soil temperature, $\mu_{TS}$ (g/cm-s) | Vadose zone effective diffusion coefficient, $D^{eff}_V$ ($cm^2/s$) | Diffusion path length, $L_d$ (cm) |
|---|---|---|---|---|---|---|---|---|
| 1.00E+06 | 5.00E-03 | 15 | 9,001 | 6.31E-03 | 2.59E-01 | 1.80E-04 | 4.49E-03 | 137 |

| Convection path length, $L_p$ (cm) | Source vapor conc., $C_{source}$ ($\mu g/m^3$) | Crack radius, $r_{crack}$ (cm) | Average vapor flow rate into bldg., $Q_{soil}$ ($cm^3/s$) | Crack effective diffusion coefficient, $D^{crack}$ ($cm^2/s$) | Area of crack, $A_{crack}$ ($cm^2$) | Exponent of equivalent foundation Peclet number, $exp(Pe^f)$ (unitless) | Infinite source indoor attenuation coefficient, $\alpha$ (unitless) | Infinite source bldg. conc., $C_{building}$ ($\mu g/m^3$) |
|---|---|---|---|---|---|---|---|---|
| 15 | 2.10E+01 | 1.25 | 8.33E+01 | 4.49E-03 | 5.00E+03 | 1.30E+16 | **3.47E-04** | 7.29E-03 |

| Unit risk factor, URF $(\mu g/m^3)^{-1}$ | Reference conc., RfC ($mg/m^3$) |
|---|---|
| NA | 3.0E-01 |

**END**

**Scenario:** **Commercial**
**Chemical:** **Toluene**

INCREMENTAL RISK CALCULATIONS:

| Incremental risk from vapor intrusion to indoor air, carcinogen (unitless) | Hazard quotient from vapor intrusion to indoor air, noncarcinogen (unitless) |
|---|---|
| **NA** | **5.5E-06** |

**MESSAGE SUMMARY BELOW:**

**END**

USEPA SG-SCREEN
Version 2.0, 04/2003

DTSC Modification
December 2014

# Department of Toxic Substances Control
# Vapor Intrusion Screening Model - Soil Gas

DATA ENTRY SHEET

**Scenario:** Residential
**Chemical:** o-Xylene

## Results Summary

| Soil Gas Conc. ($\mu g/m^3$) | Attenuation Factor (unitless) | Indoor Air Conc. ($\mu g/m^3$) | Cancer Risk | Noncancer Hazard |
|---|---|---|---|---|
| 6.80E+01 | 1.2E-04 | 8.4E-03 | NA | 8.1E-05 |

Reset to Defaults

Soil Gas Concentration Data

| ENTER Chemical CAS No. (numbers only, no dashes) | ENTER Soil gas conc., $C_g$ ($\mu g/m^3$) | OR | ENTER Soil gas conc., $C_g$ (ppmv) | Chemical |
|---|---|---|---|---|
| 95476 | 6.80E+01 | | | o-Xylene |

MORE ↓

| ENTER Depth below grade to bottom of enclosed space floor, $L_F$ (15 or 200 cm) | ENTER Soil gas sampling depth below grade, $L_s$ (cm) | ENTER Average soil temperature, $T_S$ ($^oC$) | ENTER Vadose zone SCS soil type (used to estimate soil vapor permeability) | OR | ENTER User-defined vadose zone soil vapor permeability, $k_v$ ($cm^2$) |
|---|---|---|---|---|---|
| 15 | 914 | 24 | SIL | | |

MORE ↓

| ENTER Vandose zone SCS soil type (Lookup Soil Parameters) | ENTER Vadose zone soil dry bulk density, $\rho_b^A$ ($g/cm^3$) | ENTER Vadose zone soil total porosity, $n^V$ (unitless) | ENTER Vadose zone soil water-filled porosity, $\theta_w^V$ ($cm^3/cm^3$) | ENTER Average vapor flow rate into bldg. (Leave blank to calculate) $Q_{soil}$ (L/m) |
|---|---|---|---|---|
| SIL | 1.49 | 0.439 | 0.18 | 5 |

MORE ↓

Lookup Receptor Parameters

| | ENTER Averaging time for carcinogens, $AT_C$ (yrs) | ENTER Averaging time for noncarcinogens, $AT_{NC}$ (yrs) | ENTER Exposure duration, ED (yrs) | ENTER Exposure frequency, EF (days/yr) | ENTER Exposure Time ET (hrs/day) | ENTER Air Exchange Rate ACH $(hour)^{-1}$ |
|---|---|---|---|---|---|---|
| NEW=> Residential | 70 | 26 | 26 | 350 | 24 | 0.5 |
| | | | | | (NEW) | (NEW) |

END

## o-Xylene

| Diffusivity in air, $D_a$ ($cm^2/s$) | Diffusivity in water, $D_w$ ($cm^2/s$) | Henry's law constant at reference temperature, H (atm-$m^3$/mol) | Henry's law constant reference temperature, $T_R$ ($^oC$) | Enthalpy of vaporization at the normal boiling point, $\Delta H_{v,b}$ (cal/mol) | Normal boiling point, $T_B$ ($^oK$) | Critical temperature, $T_C$ ($^oK$) | Unit risk factor, URF ($\mu g/m^3)^{-1}$ | Reference conc., RfC ($mg/m^3$) | Molecular weight, MW (g/mol) |
|---|---|---|---|---|---|---|---|---|---|
| 6.89E-02 | 8.53E-06 | 5.18E-03 | 25 | 8,661 | 417.60 | 630.30 | 0.0E+00 | 1.0E-01 | 106.17 |

**END**

INTERMEDIATE CALCULATIONS SHEET

**Scenario:** **Residential**

**Chemical:** **o-Xylene**

| Source-building separation, $L_T$ (cm) | Vadose zone soil air-filled porosity, $\theta_a^V$ ($cm^3/cm^3$) | Vadose zone effective total fluid saturation, $S_{te}$ ($cm^3/cm^3$) | Vadose zone soil intrinsic permeability, $k_i$ ($cm^2$) | Vadose zone soil relative air permeability, $k_{rg}$ ($cm^2$) | Vadose zone soil effective vapor permeability, $k_v$ ($cm^2$) | Floor-wall seam perimeter, $X_{crack}$ (cm) | Soil gas conc. ($\mu g/m^3$) | Bldg. ventilation rate, $Q_{building}$ ($cm^3/s$) |
|---|---|---|---|---|---|---|---|---|
| 899 | 0.259 | 0.307 | 2.89E-09 | 0.798 | 2.30E-09 | 4,000 | 6.80E+01 | 3.39E+04 |

| Area of enclosed space below grade, $A_B$ ($cm^2$) | Crack-to-total area ratio, $\eta$ (unitless) | Crack depth below grade, $Z_{crack}$ (cm) | Enthalpy of vaporization at ave. soil temperature, $\Delta H_{v,TS}$ (cal/mol) | Henry's law constant at ave. soil temperature, $H_{TS}$ (atm-$m^3$/mol) | Henry's law constant at ave. soil temperature, $H'_{TS}$ (unitless) | Vapor viscosity at ave. soil temperature, $\mu_{TS}$ (g/cm-s) | Vadose zone effective diffusion coefficient, $D^{eff}_V$ ($cm^2/s$) | Diffusion path length, $L_d$ (cm) |
|---|---|---|---|---|---|---|---|---|
| 1.00E+06 | 5.00E-03 | 15 | 10,245 | 4.89E-03 | 2.00E-01 | 1.80E-04 | 3.98E-03 | 899 |

| Convection path length, $L_p$ (cm) | Source vapor conc., $C_{source}$ ($\mu g/m^3$) | Crack radius, $r_{crack}$ (cm) | Average vapor flow rate into bldg., $Q_{soil}$ ($cm^3/s$) | Crack effective diffusion coefficient, $D^{crack}$ ($cm^2/s$) | Area of crack, $A_{crack}$ ($cm^2$) | Exponent of equivalent foundation Peclet number, $exp(Pe^f)$ (unitless) | Infinite source indoor attenuation coefficient, $\alpha$ (unitless) | Infinite source bldg. conc., $C_{building}$ ($\mu g/m^3$) |
|---|---|---|---|---|---|---|---|---|
| 15 | 6.80E+01 | 1.25 | 8.33E+01 | 3.98E-03 | 5.00E+03 | 1.55E+18 | **1.24E-04** | 8.43E-03 |

| Unit risk factor, URF $(\mu g/m^3)^{-1}$ | Reference conc., RfC ($mg/m^3$) |
|---|---|
| NA | 1.0E-01 |

**END**

**Scenario:** **Residential**
**Chemical:** **o-Xylene**

INCREMENTAL RISK CALCULATIONS:

| Incremental risk from vapor intrusion to indoor air, carcinogen (unitless) | Hazard quotient from vapor intrusion to indoor air, noncarcinogen (unitless) |
|---|---|
| **NA** | **8.1E-05** |

**MESSAGE SUMMARY BELOW:**

**END**

USEPA SG-SCREEN
Version 2.0, 04/2003

DTSC Modification
December 2014

# Department of Toxic Substances Control
# Vapor Intrusion Screening Model - Soil Gas

DATA ENTRY SHEET

**Scenario:** Commercial
**Chemical:** o-Xylene

| Results Summary | | | | |
|---|---|---|---|---|
| Soil Gas Conc. ($\mu g/m^3$) | Attenuation Factor (unitless) | Indoor Air Conc. ($\mu g/m^3$) | Cancer Risk | Noncancer Hazard |
| 6.80E+01 | 6.2E-05 | 4.2E-03 | NA | 9.6E-06 |

Reset to Defaults

Soil Gas Concentration Data

| ENTER Chemical CAS No. (numbers only, no dashes) | ENTER Soil gas conc., $C_g$ ($\mu g/m^3$) | OR | ENTER Soil gas conc., $C_g$ (ppmv) | Chemical |
|---|---|---|---|---|
| 95476 | 6.80E+01 | | | o-Xylene |

MORE ↓

| ENTER Depth below grade to bottom of enclosed space floor, $L_F$ (15 or 200 cm) | ENTER Soil gas sampling depth below grade, $L_s$ (cm) | ENTER Average soil temperature, $T_S$ ($^oC$) | ENTER Vadose zone SCS soil type (used to estimate soil vapor permeability) | OR | ENTER User-defined vadose zone soil vapor permeability, $k_v$ ($cm^2$) |
|---|---|---|---|---|---|
| 15 | 914 | 24 | SIL | | |

MORE ↓

| ENTER Vandose zone SCS soil type (Lookup Soil Parameters) | ENTER Vadose zone soil dry bulk density, $\rho_b^A$ ($g/cm^3$) | ENTER Vadose zone soil total porosity, $n^V$ (unitless) | ENTER Vadose zone soil water-filled porosity, $\theta_w^V$ ($cm^3/cm^3$) | ENTER Average vapor flow rate into bldg. (Leave blank to calculate) $Q_{soil}$ (L/m) |
|---|---|---|---|---|
| SIL | 1.49 | 0.439 | 0.18 | 5 |

MORE ↓

Lookup Receptor Parameters

| | ENTER Averaging time for carcinogens, $AT_C$ (yrs) | ENTER Averaging time for noncarcinogens, $AT_{NC}$ (yrs) | ENTER Exposure duration, ED (yrs) | ENTER Exposure frequency, EF (days/yr) | ENTER Exposure Time ET (hrs/day) | ENTER Air Exchange Rate ACH $(hour)^{-1}$ |
|---|---|---|---|---|---|---|
| NEW=> Commercial | 70 | 25 | 25 | 250 | 8 | 1 |
| | | | | | (NEW) | (NEW) |

END

## o-Xylene

| Diffusivity in air, $D_a$ ($cm^2/s$) | Diffusivity in water, $D_w$ ($cm^2/s$) | Henry's law constant at reference temperature, H (atm-$m^3$/mol) | Henry's law constant reference temperature, $T_R$ ($^oC$) | Enthalpy of vaporization at the normal boiling point, $\Delta H_{v,b}$ (cal/mol) | Normal boiling point, $T_B$ ($^oK$) | Critical temperature, $T_C$ ($^oK$) | Unit risk factor, URF ($\mu g/m^3)^{-1}$ | Reference conc., RfC ($mg/m^3$) | Molecular weight, MW (g/mol) |
|---|---|---|---|---|---|---|---|---|---|
| 6.89E-02 | 8.53E-06 | 5.18E-03 | 25 | 8,661 | 417.60 | 630.30 | 0.0E+00 | 1.0E-01 | 106.17 |

**END**

INTERMEDIATE CALCULATIONS SHEET

**Scenario:** **Commercial**

**Chemical:** **o-Xylene**

| Source-building separation, $L_T$ (cm) | Vadose zone soil air-filled porosity, $\theta_a^V$ ($cm^3/cm^3$) | Vadose zone effective total fluid saturation, $S_{te}$ ($cm^3/cm^3$) | Vadose zone soil intrinsic permeability, $k_i$ ($cm^2$) | Vadose zone soil relative air permeability, $k_{rg}$ ($cm^2$) | Vadose zone soil effective vapor permeability, $k_v$ ($cm^2$) | Floor-wall seam perimeter, $X_{crack}$ (cm) | Soil gas conc. ($\mu g/m^3$) | Bldg. ventilation rate, $Q_{building}$ ($cm^3/s$) |
|---|---|---|---|---|---|---|---|---|
| 899 | 0.259 | 0.307 | 2.89E-09 | 0.798 | 2.30E-09 | 4,000 | 6.80E+01 | 6.78E+04 |

| Area of enclosed space below grade, $A_B$ ($cm^2$) | Crack-to-total area ratio, $\eta$ (unitless) | Crack depth below grade, $Z_{crack}$ (cm) | Enthalpy of vaporization at ave. soil temperature, $\Delta H_{v,TS}$ (cal/mol) | Henry's law constant at ave. soil temperature, $H_{TS}$ (atm-$m^3$/mol) | Henry's law constant at ave. soil temperature, $H'_{TS}$ (unitless) | Vapor viscosity at ave. soil temperature, $\mu_{TS}$ (g/cm-s) | Vadose zone effective diffusion coefficient, $D^{eff}_V$ ($cm^2/s$) | Diffusion path length, $L_d$ (cm) |
|---|---|---|---|---|---|---|---|---|
| 1.00E+06 | 5.00E-03 | 15 | 10,245 | 4.89E-03 | 2.00E-01 | 1.80E-04 | 3.98E-03 | 899 |

| Convection path length, $L_p$ (cm) | Source vapor conc., $C_{source}$ ($\mu g/m^3$) | Crack radius, $r_{crack}$ (cm) | Average vapor flow rate into bldg., $Q_{soil}$ ($cm^3/s$) | Crack effective diffusion coefficient, $D^{crack}$ ($cm^2/s$) | Area of crack, $A_{crack}$ ($cm^2$) | Exponent of equivalent foundation Peclet number, $exp(Pe^f)$ (unitless) | Infinite source indoor attenuation coefficient, $\alpha$ (unitless) | Infinite source bldg. conc., $C_{building}$ ($\mu g/m^3$) |
|---|---|---|---|---|---|---|---|---|
| 15 | 6.80E+01 | 1.25 | 8.33E+01 | 3.98E-03 | 5.00E+03 | 1.55E+18 | **6.20E-05** | 4.22E-03 |

| Unit risk factor, URF $(\mu g/m^3)^{-1}$ | Reference conc., RfC ($mg/m^3$) |
|---|---|
| NA | 1.0E-01 |

**END**

**Scenario:** **Commercial**
**Chemical:** **o-Xylene**

INCREMENTAL RISK CALCULATIONS:

| Incremental risk from vapor intrusion to indoor air, carcinogen (unitless) | Hazard quotient from vapor intrusion to indoor air, noncarcinogen (unitless) |
|---|---|
| **NA** | **9.6E-06** |

**MESSAGE SUMMARY BELOW:**

**END**

USEPA SG-SCREEN
Version 2.0, 04/2003

DTSC Modification
December 2014

# Department of Toxic Substances Control
# Vapor Intrusion Screening Model - Soil Gas

DATA ENTRY SHEET

**Scenario:** Residential
**Chemical:** o-Xylene

| Results Summary | | | | |
|---|---|---|---|---|
| Soil Gas Conc. ($\mu g/m^3$) | Attenuation Factor (unitless) | Indoor Air Conc. ($\mu g/m^3$) | Cancer Risk | Noncancer Hazard |
| 1.40E+02 | 2.4E-04 | 3.4E-02 | NA | 3.2E-04 |

Reset to Defaults

Soil Gas Concentration Data

| ENTER Chemical CAS No. (numbers only, no dashes) | ENTER Soil gas conc., $C_g$ ($\mu g/m^3$) | OR | ENTER Soil gas conc., $C_g$ (ppmv) | Chemical |
|---|---|---|---|---|
| 95476 | 1.40E+02 | | | o-Xylene |

MORE ↓

| ENTER Depth below grade to bottom of enclosed space floor, $L_F$ (15 or 200 cm) | ENTER Soil gas sampling depth below grade, $L_s$ (cm) | ENTER Average soil temperature, $T_S$ ($^oC$) | ENTER Vadose zone SCS soil type (used to estimate soil vapor permeability) | OR | ENTER User-defined vadose zone soil vapor permeability, $k_v$ ($cm^2$) |
|---|---|---|---|---|---|
| 15 | 457 | 24 | SIL | | |

MORE ↓

| ENTER Vandose zone SCS soil type (Lookup Soil Parameters) | ENTER Vadose zone soil dry bulk density, $\rho_b^A$ ($g/cm^3$) | ENTER Vadose zone soil total porosity, $n^V$ (unitless) | ENTER Vadose zone soil water-filled porosity, $\theta_w^V$ ($cm^3/cm^3$) | ENTER Average vapor flow rate into bldg. (Leave blank to calculate) $Q_{soil}$ (L/m) |
|---|---|---|---|---|
| SIL | 1.49 | 0.439 | 0.18 | 5 |

MORE ↓

Lookup Receptor Parameters

| | ENTER Averaging time for carcinogens, $AT_C$ (yrs) | ENTER Averaging time for noncarcinogens, $AT_{NC}$ (yrs) | ENTER Exposure duration, ED (yrs) | ENTER Exposure frequency, EF (days/yr) | ENTER Exposure Time ET (hrs/day) | ENTER Air Exchange Rate ACH $(hour)^{-1}$ |
|---|---|---|---|---|---|---|
| NEW=> Residential | 70 | 26 | 26 | 350 | 24 (NEW) | 0.5 (NEW) |

END

## o-Xylene

| Diffusivity in air, $D_a$ ($cm^2/s$) | Diffusivity in water, $D_w$ ($cm^2/s$) | Henry's law constant at reference temperature, H (atm-$m^3$/mol) | Henry's law constant reference temperature, $T_R$ ($^oC$) | Enthalpy of vaporization at the normal boiling point, $\Delta H_{v,b}$ (cal/mol) | Normal boiling point, $T_B$ ($^oK$) | Critical temperature, $T_C$ ($^oK$) | Unit risk factor, URF ($\mu g/m^3)^{-1}$ | Reference conc., RfC ($mg/m^3$) | Molecular weight, MW (g/mol) |
|---|---|---|---|---|---|---|---|---|---|
| 6.89E-02 | 8.53E-06 | 5.18E-03 | 25 | 8,661 | 417.60 | 630.30 | 0.0E+00 | 1.0E-01 | 106.17 |

**END**

INTERMEDIATE CALCULATIONS SHEET

**Scenario:** **Residential**

**Chemical:** **o-Xylene**

| Source-building separation, $L_T$ (cm) | Vadose zone soil air-filled porosity, $\theta_a^V$ ($cm^3/cm^3$) | Vadose zone effective total fluid saturation, $S_{te}$ ($cm^3/cm^3$) | Vadose zone soil intrinsic permeability, $k_i$ ($cm^2$) | Vadose zone soil relative air permeability, $k_{rg}$ ($cm^2$) | Vadose zone soil effective vapor permeability, $k_v$ ($cm^2$) | Floor-wall seam perimeter, $X_{crack}$ (cm) | Soil gas conc. ($\mu g/m^3$) | Bldg. ventilation rate, $Q_{building}$ ($cm^3/s$) |
|---|---|---|---|---|---|---|---|---|
| 442 | 0.259 | 0.307 | 2.89E-09 | 0.798 | 2.30E-09 | 4,000 | 1.40E+02 | 3.39E+04 |

| Area of enclosed space below grade, $A_B$ ($cm^2$) | Crack-to-total area ratio, $\eta$ (unitless) | Crack depth below grade, $Z_{crack}$ (cm) | Enthalpy of vaporization at ave. soil temperature, $\Delta H_{v,TS}$ (cal/mol) | Henry's law constant at ave. soil temperature, $H_{TS}$ (atm-$m^3$/mol) | Henry's law constant at ave. soil temperature, $H'_{TS}$ (unitless) | Vapor viscosity at ave. soil temperature, $\mu_{TS}$ (g/cm-s) | Vadose zone effective diffusion coefficient, $D^{eff}_V$ ($cm^2/s$) | Diffusion path length, $L_d$ (cm) |
|---|---|---|---|---|---|---|---|---|
| 1.00E+06 | 5.00E-03 | 15 | 10,245 | 4.89E-03 | 2.00E-01 | 1.80E-04 | 3.98E-03 | 442 |

| Convection path length, $L_p$ (cm) | Source vapor conc., $C_{source}$ ($\mu g/m^3$) | Crack radius, $r_{crack}$ (cm) | Average vapor flow rate into bldg., $Q_{soil}$ ($cm^3/s$) | Crack effective diffusion coefficient, $D^{crack}$ ($cm^2/s$) | Area of crack, $A_{crack}$ ($cm^2$) | Exponent of equivalent foundation Peclet number, $exp(Pe^f)$ (unitless) | Infinite source indoor attenuation coefficient, $\alpha$ (unitless) | Infinite source bldg. conc., $C_{building}$ ($\mu g/m^3$) |
|---|---|---|---|---|---|---|---|---|
| 15 | 1.40E+02 | 1.25 | 8.33E+01 | 3.98E-03 | 5.00E+03 | 1.55E+18 | **2.40E-04** | 3.36E-02 |

| Unit risk factor, URF $(\mu g/m^3)^{-1}$ | Reference conc., RfC ($mg/m^3$) |
|---|---|
| NA | 1.0E-01 |

**END**

**Scenario:** **Residential**
**Chemical:** **o-Xylene**

INCREMENTAL RISK CALCULATIONS:

| Incremental risk from vapor intrusion to indoor air, carcinogen (unitless) | Hazard quotient from vapor intrusion to indoor air, noncarcinogen (unitless) |
|---|---|
| **NA** | **3.2E-04** |

**MESSAGE SUMMARY BELOW:**

**END**

USEPA SG-SCREEN
Version 2.0, 04/2003

DTSC Modification
December 2014

# Department of Toxic Substances Control
# Vapor Intrusion Screening Model - Soil Gas

DATA ENTRY SHEET

**Scenario:** Commercial
**Chemical:** o-Xylene

| Results Summary | | | | |
|---|---|---|---|---|
| Soil Gas Conc. ($\mu g/m^3$) | Attenuation Factor (unitless) | Indoor Air Conc. ($\mu g/m^3$) | Cancer Risk | Noncancer Hazard |
| 1.40E+02 | 1.2E-04 | 1.7E-02 | NA | 3.8E-05 |

Reset to Defaults

Soil Gas Concentration Data

| ENTER Chemical CAS No. (numbers only, no dashes) | ENTER Soil gas conc., $C_g$ ($\mu g/m^3$) | OR | ENTER Soil gas conc., $C_g$ (ppmv) | Chemical |
|---|---|---|---|---|
| 95476 | 1.40E+02 | | | o-Xylene |

MORE ↓

| ENTER Depth below grade to bottom of enclosed space floor, $L_F$ (15 or 200 cm) | ENTER Soil gas sampling depth below grade, $L_s$ (cm) | ENTER Average soil temperature, $T_S$ ($^oC$) | ENTER Vadose zone SCS soil type (used to estimate soil vapor permeability) | OR | ENTER User-defined vadose zone soil vapor permeability, $k_v$ ($cm^2$) |
|---|---|---|---|---|---|
| 15 | 457 | 24 | SIL | | |

MORE ↓

| ENTER Vandose zone SCS soil type (Lookup Soil Parameters) | ENTER Vadose zone soil dry bulk density, $\rho_b^A$ ($g/cm^3$) | ENTER Vadose zone soil total porosity, $n^V$ (unitless) | ENTER Vadose zone soil water-filled porosity, $\theta_w^V$ ($cm^3/cm^3$) | ENTER Average vapor flow rate into bldg. (Leave blank to calculate) $Q_{soil}$ (L/m) |
|---|---|---|---|---|
| SIL | 1.49 | 0.439 | 0.18 | 5 |

MORE ↓

Lookup Receptor Parameters

| | ENTER Averaging time for carcinogens, $AT_C$ (yrs) | ENTER Averaging time for noncarcinogens, $AT_{NC}$ (yrs) | ENTER Exposure duration, ED (yrs) | ENTER Exposure frequency, EF (days/yr) | ENTER Exposure Time ET (hrs/day) | ENTER Air Exchange Rate ACH $(hour)^{-1}$ |
|---|---|---|---|---|---|---|
| NEW=> Commercial | 70 | 25 | 25 | 250 | 8 | 1 |
| | | | | | (NEW) | (NEW) |

END

## o-Xylene

| Diffusivity in air, $D_a$ ($cm^2/s$) | Diffusivity in water, $D_w$ ($cm^2/s$) | Henry's law constant at reference temperature, H (atm-$m^3$/mol) | Henry's law constant reference temperature, $T_R$ ($^oC$) | Enthalpy of vaporization at the normal boiling point, $\Delta H_{v,b}$ (cal/mol) | Normal boiling point, $T_B$ ($^oK$) | Critical temperature, $T_C$ ($^oK$) | Unit risk factor, URF ($\mu g/m^3)^{-1}$ | Reference conc., RfC ($mg/m^3$) | Molecular weight, MW (g/mol) |
|---|---|---|---|---|---|---|---|---|---|
| 6.89E-02 | 8.53E-06 | 5.18E-03 | 25 | 8,661 | 417.60 | 630.30 | 0.0E+00 | 1.0E-01 | 106.17 |

**END**

INTERMEDIATE CALCULATIONS SHEET

**Scenario:** **Commercial**

**Chemical:** **o-Xylene**

| Source-building separation, $L_T$ (cm) | Vadose zone soil air-filled porosity, $\theta_a^V$ ($cm^3/cm^3$) | Vadose zone effective total fluid saturation, $S_{te}$ ($cm^3/cm^3$) | Vadose zone soil intrinsic permeability, $k_i$ ($cm^2$) | Vadose zone soil relative air permeability, $k_{rg}$ ($cm^2$) | Vadose zone soil effective vapor permeability, $k_v$ ($cm^2$) | Floor-wall seam perimeter, $X_{crack}$ (cm) | Soil gas conc. ($\mu g/m^3$) | Bldg. ventilation rate, $Q_{building}$ ($cm^3/s$) |
|---|---|---|---|---|---|---|---|---|
| 442 | 0.259 | 0.307 | 2.89E-09 | 0.798 | 2.30E-09 | 4,000 | 1.40E+02 | 6.78E+04 |

| Area of enclosed space below grade, $A_B$ ($cm^2$) | Crack-to-total area ratio, $\eta$ (unitless) | Crack depth below grade, $Z_{crack}$ (cm) | Enthalpy of vaporization at ave. soil temperature, $\Delta H_{v,TS}$ (cal/mol) | Henry's law constant at ave. soil temperature, $H_{TS}$ (atm-$m^3$/mol) | Henry's law constant at ave. soil temperature, $H'_{TS}$ (unitless) | Vapor viscosity at ave. soil temperature, $\mu_{TS}$ (g/cm-s) | Vadose zone effective diffusion coefficient, $D^{eff}_V$ ($cm^2/s$) | Diffusion path length, $L_d$ (cm) |
|---|---|---|---|---|---|---|---|---|
| 1.00E+06 | 5.00E-03 | 15 | 10,245 | 4.89E-03 | 2.00E-01 | 1.80E-04 | 3.98E-03 | 442 |

| Convection path length, $L_p$ (cm) | Source vapor conc., $C_{source}$ ($\mu g/m^3$) | Crack radius, $r_{crack}$ (cm) | Average vapor flow rate into bldg., $Q_{soil}$ ($cm^3/s$) | Crack effective diffusion coefficient, $D^{crack}$ ($cm^2/s$) | Area of crack, $A_{crack}$ ($cm^2$) | Exponent of equivalent foundation Peclet number, $exp(Pe^f)$ (unitless) | Infinite source indoor attenuation coefficient, $\alpha$ (unitless) | Infinite source bldg. conc., $C_{building}$ ($\mu g/m^3$) |
|---|---|---|---|---|---|---|---|---|
| 15 | 1.40E+02 | 1.25 | 8.33E+01 | 3.98E-03 | 5.00E+03 | 1.55E+18 | **1.20E-04** | 1.68E-02 |

| Unit risk factor, URF $(\mu g/m^3)^{-1}$ | Reference conc., RfC ($mg/m^3$) |
|---|---|
| NA | 1.0E-01 |

**END**

**Scenario:** **Commercial**
**Chemical:** **o-Xylene**

INCREMENTAL RISK CALCULATIONS:

| Incremental risk from vapor intrusion to indoor air, carcinogen (unitless) | Hazard quotient from vapor intrusion to indoor air, noncarcinogen (unitless) |
|---|---|
| **NA** | **3.8E-05** |

**MESSAGE SUMMARY BELOW:**

**END**

# Appendix E
# LIMITATIONS

Appendix E
LIMITATIONS
July 8, 2016

This report was prepared in accordance with the scope of work outlined in Stantec's contract and with generally accepted professional environmental consulting practices existing at the time this report was prepared and applicable to the location of the Property. It was prepared for the exclusive use of GWP, for the express purpose stated above. Any re-use of this report for a different purpose or by others not identified above shall be at the user's sole risk without liability to Stantec. To the extent that this report is based on information provided to Stantec by third parties, Stantec may have made efforts to verify this third party information, but Stantec cannot guarantee the completeness or accuracy of this information. The opinions expressed and data collected are based on the conditions of the Property existing at the time of the field investigation. No other warranties, expressed or implied are made by Stantec. These opinions have been arrived at in accordance with currently accepted hydrogeologic and engineering standards and practices applicable to this location at the time the work was performed, and are subject to the following inherent limitations:

1. Also, the transformers storage area/switch rack area (potential PCB transformers) was identified in the Phase I ESA as an REC; however, drilling within this area was prohibited by the plant management staff, and thus is noted as a limitation to this Phase II ESA scope of work.

2. Stantec derived the data in this report primarily from visual observations, examination of records in the public domain, and interviews with individuals having information about the Property. The passage of time, manifestation of latent conditions, or occurrence of future events may require further study at the Property, analysis of the data, and reevaluation of the findings, observations, and conclusions in the report.

2. The data reported and the findings, observations, and conclusions expressed in the report are limited by the scope of work. The scope of work is outlined in Stantec's proposal dated February 4, 2016, and agreed to by the client.

3. Because of the limitations stated above, the findings, observations, and conclusions expressed by Stantec in this report are not, nor should not be, considered an opinion concerning the compliance of any past or present owner or operator of the site with any federal, state, or local law or regulation.

4. No warranty or guarantee, whether express or implied, is made with respect to the data reported of findings, observations, and conclusions that are based solely upon the Property conditions in existence at the time of investigation.

5. Phase II ESA reports present professional opinions and findings of a scientific and technical nature. This report shall not be construed to offer legal opinion or representations as to the requirements of, nor compliance with, environmental laws, rules, regulations, or policies of federal, state, or local government agencies. Any use of the report constitutes acceptance of the limits of Stantec's liability. Stantec's liability

extends only to its client and not to any other parties who may obtain the Phase II ESA report.

6. The purpose of this assessment was to screen for adverse impact at the Property and potential off-site sources of contamination that were identified during the Phase I ESA. This assessment was limited in nature, and was not intended to eliminate all environmental risk during the due diligence process. The professional opinions in this report are based in part on the interpretation of data from discrete sampling locations that may not represent conditions at un-sampled locations.

7. This report is based, in part, on unverified information supplied to Stantec by third-party sources. While efforts have been made to substantiate this third-party information, Stantec cannot guarantee its completeness or accuracy.

# E.3 GEOTECHNICAL INVESTIGATION REPORT

**Stantec Consulting Services Inc.**
25864-F Business Center Drive
Redlands, CA 92374
Tel: (909) 335-6116
Fax: (909) 335-6120

December 10, 2015

Mr. Carl Haase
Stantec Consulting Services Inc.
199 South Los Robles Avenue, Suite 810
Pasadena, CA 91101

**Reference: GEOTECHNICAL STUDY**
Grayson Power Plant
800 Air Way
Glendale, California
Stantec Project No. 2057123300

Dear Mr. Haase:

Stantec Consulting Services Inc. (Stantec) has prepared this Geotechnical Study to support California Environmental Quality Act (CEQA) compliance for the proposed partial redevelopment of the Grayson Power Plant, located at 800 Air Way in the city of Glendale, California. The general area is shown on Figure 1.

**PURPOSE AND SCOPE OF WORK**

- Review available subsurface information for the Site,
- Drill a total of six soil borings to depths ranging from 51.5 to 56.5 feet below the existing ground surface (bgs),
- Perform soil mechanics laboratory testing on select soil samples,
- Evaluate geotechnical properties of soils pertinent to the CEQA Guidelines, and
- Summarize findings, conclusions, and recommendations in this letter.

**SITE DESCRIPTION**

The site is comprised of an existing 25-acre power plant owned by the City of Glendale. The proposed project will entail the removal of existing generating facilities located in the southeast portion of the property. These facilities were built between 1941 and 1977.

**PRE-FIELD ACTIVITIES**

Preliminary sampling locations were selected based on review of conceptual development plans and confirmed in the field at the time of field sampling. In addition, a site-specific Health and Safety Plan (HASP) was developed in accordance with California Occupational Safety and Health Administration (Cal OSHA) requirements to guide field activities.

**HOLLOW STEM AUGER DRILLING**

Six hollow stem auger (HSA) borings were drilled on September 16, 2015, by California Pacific Drilling (CalPac) and 2R Drilling (2RD) under the direction of a Stantec representative. Calpac and 2RD drilled the soil borings using a Mobile B-61 and CME-75 drill rig, respectively. Drilling and soil sampling were performed under the general guidance of ASTM D6151 (Standard Practice for Using Hollow-Stem Augers (HSA) for Geotechnical Exploration and Soil Sampling).

The borings were advanced using six-inch outside diameter auger, to a maximum depth of approximately 56.5 feet below the ground surface (bgs), at the locations shown on Figure 2.

At each boring location, drilling was initiated by pushing the lead HSA auger below the ground surface and rotating it at a low velocity. Firm downward pressure and low rotation velocity were maintained in the beginning to produce a straight borehole. Once a straight hole was initiated and the HSA auger appeared clear of potential underground utilities, rotation velocity and downward pressure were increased. The rotation velocity and downward pressures were adjusted during drilling to optimize penetration rates with appropriate drill cutting return up the HSA auger flight. Additional sections of HSA auger flight were attached to the drill column to achieve the desired drilling/sampling depths.

When the desired sampling depth was achieved, the bottom of the borehole was cleaned by slowly rotating the auger with minimal downward pressure. When the borehole was sufficiently clean, soil samples were collected as described in the section below.

Following completion of drilling and soil sampling, the borings were abandoned by removing the auger and/or sampling equipment from the borehole and subsequently backfilling with native soil.

**SPLIT SPOON SAMPLING**

Stantec personnel, under the direct supervision of a licensed engineer, were onsite to supervise field operations, log subsurface soil conditions, and to collect soil samples for physical and chemical analysis. Soil samples were collected using a California Modified (CM) and Standard Penetration Test (SPT) split-spoon samplers, under the general guidance of ASTM D1586 (Standard Test Method for Penetration Test and Split-Barrel Sampling of Soils), D3550 (Standard Practice for Ring-Lined Barrel Sampling of Soils) and D6066 (Standard Practice for Determining the Normalized Penetration Resistance of Sands for Evaluation of Liquefaction Potential). The CM sampler is approximately 18 inches long by 2.5 inches inside diameter (ID). The SPT sampler is approximately 18 inches long by 1.5 inches ID. The samplers were driven with a 140-pound hammer, free-falling 30 inches. Unless otherwise indicated on the boring logs, the samplers were advanced 18 inches at each sample interval and the blow counts required to advance the sampler each six-inch drive length were recorded on the boring logs. The blow counts are used in the evaluation of the consistency of the soils and are correlated to various engineering properties.

Soil sampling was performed at approximately five-foot intervals, to the total depth of exploration. The observed soils in samples and drill cuttings were classified in accordance with the Unified Soil Classification System (ASTM D2488 (Standard Practice for Description and Identification of Soils [Visual-Manual Method])).

### LABORATORY SOIL TESTING

Laboratory testing consisted of sieve analyses (ASTM D-422). This test is used to evaluate the distribution of soil grain sizes, and is used in soil classification and assessment of soil engineering behavior. The results of the laboratory tests are presented in Appendix A.

## REGIONAL GEOLOGY

The Site is located in the northwestern portion of the Transverse Range Geomorphic Province in the southwestern part of California. The region is separated by an east to west trending series of steep mountain ranges and valleys, subparallel to faults branching from the San Andreas Fault. The Site resides in the portion of the Province drained by the Los Angeles River.

Based on information depicted on the 2003 Geologic Map of Long Beach, the Site is underlain by Quaternary age alluvial deposits consisting of silt, silty sand, sand, and sand with gravel transported by the Los Angeles River and Verdugo Wash. These sediments are derived from early Cretaceous quartz diorite and granitic rock in the San Gabriel Mountains and Verdugo HIlls to the north and northeast, respectively (CGS, 2003).

### SUBSURFACE CONDITIONS

The soils encountered near the surface were composed of sand (SP, SW, SW-SM, SP-SM, SC, and SM USCS soil type) and silt (ML USCS soil type) to a depth of approximately 56.5 feet below the ground surface. The near surface sands were moist to wet and generally fine to coarse in grain size, contained variable amounts of gravel, and were loose to very dense. The near surface silts were moist and generally stiff to very stiff in consistency.

The subsurface soils were not difficult to penetrate and the hand auger borings did not cave to the maximum depth of exploration. Groundwater was not encountered during this investigation.

### REGIONAL SEISMICITY

The estimated distance of the Site to the nearest expected surface expression of nearby faults is presented in the table below.

| Fault | Distance (miles) (1) | Maximum Moment Magnitude (1) |
|---|---|---|
| Verdugo | 1.7 | 6.9 |
| Hollywood | 3.0 | 6.7 |
| Elysian Park (Upper) | 3.3 | 6.7 |
| Santa Monica | 3.4 | 7.4 |
| Raymond | 4.1 | 6.8 |
| Sierra Madre | 6.1 | 7.3 |
| Sierra Madre (San Fernando) | 8.3 | 6.7 |
| Puente Hills (LA) | 9.2 | 7.0 |
| Santa Monica | 9.8 | 7.3 |
| Newport Inglewood | 10.2 | 7.5 |
| San Gabriel | 11.0 | 7.3 |
| Northridge | 11.9 | 6.9 |

| Fault | Distance (miles) (1) | Maximum Moment Magnitude (1) |
|---|---|---|
| Clamshell-Sawpit | 16.1 | 6.7 |
| Malibu Coast | 16.7 | 7.0 |
| Santa Susana | 16.9 | 6.9 |
| Elsinore | 17.4 | 7.8 |
| Anacapa-Dume | 18.3 | 7.2 |
| Puente Hills (Santa Fe Springs) | 19.1 | 6.7 |
| Palos Verdes | 20.6 | 7.7 |

1. 2008 National Seismic Hazard Maps – USGS.

## REGIONAL SEISMIC HAZARDS

### Fault Rupture Hazard

The Site is not located within a currently mapped Alquist-Priolo Special Studies Fault Zone (CDMG, 2002b). As noted above, the nearest fault is the Verdugo fault, located approximately 1.7 miles northeast of the Site. Based on available geologic data, there is low to moderate potential for surface rupture from the Verdugo fault and other nearby active faults during the design life of the proposed development.

### Ground Shaking

Strong ground shaking can be expected at the Site during moderate to severe earthquakes in the general region. This is common to most areas in Southern California.

Information published by the California Division of Mines and Geology (CDMG) indicates the Peak Ground Acceleration (PGA) with a 2 percent probability of being exceeded at the Site in 50 years is 1.08g (USGS, 2008); where g is the acceleration due to gravity; determined in accordance with the 2008 National Seismic Hazard Mapping Project (NSHMP) Probabilistic Seismic Hazard Assessment (PSHA) Interactive Deaggregation website.

### Liquefaction Background

Liquefaction of saturated sandy soils generally results in a sudden decrease in soil shear strength due to vibration. During cyclic shaking, typically caused by an earthquake, the soil mass is distorted, and interparticulate stresses are transferred from the soil particles to the pore water. As pore pressure increases the bearing capacity decreases and the soil may behave temporarily as a viscous fluid (liquefaction) and, consequently, lose its capacity to support the structures founded thereon.

Engineering research of soil liquefaction potential (Seed, et. al., 1982 and 1985) indicates that generally three basic factors must exist concurrently in order for liquefaction to occur, namely:

- A source of ground shaking, such as an earthquake, capable of generating soil mass distortions.
- A relatively loose, clean sandy soil fabric exhibiting a potential for volume reduction.
- A relative shallow groundwater table (within approximately 50 feet below ground surface) or completely saturated soil conditions that will allow positive pore pressure generation.

**Screening Investigation for Liquefaction Potential**

The Site is located within a current, mapped California Liquefaction Hazard Zone. A liquefaction evaluation for the Site was completed under the guidance of Special Publication 117a: Guidelines for Evaluating and Mitigating Seismic Hazards in California," published by the California Department of Conservation, California Geologic Survey, dated 2008 and based on empirical procedures described in Martin and Lew et al. (1999).

The general Site characteristics, such as potential for seismic shaking, soil type, soil density, depth to groundwater, etc., were evaluated in an initial Screening Investigation (CGS, 2008). These characteristics were compared to conditions of known liquefaction susceptibility.

- *Potential for Strong Seismic Activity*—The Site is located within 1.7 miles and 3.4 miles of active faults capable of generating magnitude 6.9 and 7.4 earthquakes, respectively.
- *Shallow Groundwater within 50 feet* — Groundwater was not encountered in the borings drilled during this investigation, which extended to a depth of approximately 56.5 feet bgs. However, historic high depth to groundwater is reported at approximately 30 feet bgs (CDMG, 1998).
- *Relatively Loose Soils*—Blowcounts were recorded at less than 30 blows per foot in subsurface soils in the upper 50 feet bgs.
- *Cohesionless Soils*—Boring logs indicate that subsurface soils consist of interbedded layers of relatively clean sands and silty sands along with silt soils in the upper 50 feet bgs.
- Potentially liquefiable soils with $(N_1)_{60}$ values less than 15 are generally considered potentially susceptible to lateral displacement (Youd et al., 2002). Various layers below the site exhibit $(N_1)_{60}$ values less than 15.

The data indicate conditions at the Site may be susceptible to seismically induced liquefaction. Consequently, a quantitative evaluation of liquefaction potential was conducted.

**Quantitative Evaluation of Liquefaction Resistance**

In accordance with protocols outlined in SP 117a (CDMG, 2008), a Quantitative Evaluation of Liquefaction Resistance was performed for soil layers in the upper 40 feet bgs. The soil conditions used in the analysis are based on the boring logs. Where blow counts were recorded using a 2.5-inch inside diameter California Modified sampler, the field sampler blow counts were converted to equivalent SPT blow counts following the Lowe and Zaccheo Sampler Hammer Ratio (Winterkorn and Fang, 1975).

A probabilistic seismic hazard analysis (PSHA) was conducted to estimate ground motion accelerations corresponding to an earthquake having a 2 percent probability of exceedance over a 50-year time period. The design peak ground acceleration (PGA) was determined using the Unites States Geologic Survey's 2008 Interactive Deaggregations website and the ASCE 7-10 manual. The faults used in the PSHA were based upon a USGS fault catalog.

The site specific PGA was developed using Campbell and Bozorgonia's 1997 revised ground motion attenuation relation for alluvium. Dispersion in the Campbell and Bozorgonia relationship was considered by inclusion of the standard deviation of the ground motion. For liquefaction analysis the PGA was scaled to an earthquake magnitude 7.5 using the NCEER 1997 magnitude scaling factor (Youd and Idriss, 2001). The 7.5 earthquake magnitude scaled site specific PGA is 1.2g.

The liquefaction probabilities were calculated using guidance developed by Seed and others (2003), and represent the corrected cyclic stress ratio (CSR*) required to cause liquefaction in a given soil layer divided by the overburden correction value. For the purpose of this evaluation, a layer was considered to be susceptible to liquefaction if the probability of liquefaction was greater than 20 percent. A liquefaction hazard analysis was conducted for the liquefaction susceptible soils in the depth interval of 30 to 40 feet bgs.

**Effect of Potential Soil Liquefaction**

Based on a quantitative evaluation, the loose saturated sand and silty sand appear to be susceptible to liquefaction in the event of a major earthquake. Soil liquefaction alone does not pose a risk to site development, but the effects of soil liquefaction on a site typically do. Such risks may include sand boils, lateral spreading, foundation bearing failure, and ground settlement.

Based on the available data for the site, the potentially liquefiable soils are overlain by approximately 30 feet of sand and silt soils in the unsaturated zone. The potential for surface manifestation of sand boils and lateral spreading are slight.

The potential ground settlement resulting from seismic induced settlement was evaluated for the site based on the empirical procedures developed by Seed and others (2003) which compare the volumetric strain in the soil with the induced cyclic stress ratios. Assuming that the epicenter of the design earthquake occurs at the closest proximal distance from the fault to the site, the anticipated settlement in the potentially liquefiable layers between 30 to 40 feet bgs is expected to be approximately 2 inches, with differential settlements on the order of 1 inch.

**Seismic Induced Settlement in Unsaturated Zone**

Near surface soils in the unsaturated zone consist of loose to very dense silty sands and stiff to very stiff silt. Silty sand sediments may be prone to volumetric strain as a result of cyclic loading from seismic activity. Although difficult to predict, surface settlements in the unsaturated zone were estimated to be approximately 11 inches, with differential settlements on the order of 5 to 6 inches, following methods promulgated by Tokimatsu and Seed (1987).

**Lateral Spreading**

Lateral spreading typically occurs as a form of horizontal displacement of relatively flat-lying alluvial material toward an open or "free" face such as an open body of water, channel, or excavation. This movement is generally due to failure along a weak plane, and may often be associated with liquefaction. As cracks develop within the weakened material, blocks of soil displace laterally toward the open face. Cracking and lateral movement may gradually propagate away from the face as blocks continue to break free.

Due to the depth of groundwater, it is our opinion that the potential for lateral spreading is minimal.

**EXPANSIVE SOIL POTENTIAL**

The near-surface soils encountered in the proposed construction area are predominantly sand with variable amounts of silt. Based on experience with these types of soils, the Plasticity index (PI) is expected to be less than 15, determined in accordance with ASTM D4318. In addition, the portion of the soils passing a No. 200 sieve (75 micrometers (μm)), it is expected to consist of silt

particles greater than 5 μm in size. It is our opinion that the soils are not expansive, as identified in Table 18-1-B of the Uniform Building Code (1994), and do not create substantial risks to life or property.

It is not anticipated that soil will be imported for the proposed project. If imported soils are used for earthwork at the Site, Stantec recommends that the proposed soils be tested for expansion potential prior to import.

**SLOPES AND EROSION**

The Site is relatively flat, with a topographic gradient less than 2% and no permanent slopes steeper that 5:1 (horizontal to vertical) or higher than 5 feet are anticipated for the project. Landslides are not considered a potential hazard. The stability of slopes, if any, should be verified when design-grading information becomes available.

The predominately granular soils underlying the site are potentially susceptible to erosion or the loss of topsoil where slopes are present. Final landscape plans should incorporate provisions for surface drainage, ground cover and plantings to control runoff and minimize erosion.

**CLOSURE**

Stantec trusts that the information provided herein meets the project requirements. If there are any questions regarding this project, please contact the undersigned at your convenience.

Respectfully submitted,
**Stantec Consulting Services Inc.**

Jaret Fischer, PE
Senior Engineer
Phone: (909) 335-6116 ext. 8209
Fax: (909) 335-6120
jaret.fischer@stantec.com

James Stone, GE
Associate
Phone: (504) 461-9700
Fax: (504) 461-9700
james.stone@stantec.com

**FIGURES**
Figure 1 - Site Location Map
Figure 2 - Site Plan

**APPENDICES**
Appendix A – Laboratory Test Results

## REFERENCES


Bowles, Joseph E., 1988, Foundation Analysis and Design, Fourth Edition, Chapter 2, Geotechnical Properties; Laboratory Testing; Index Settlement and Strength Correlations.

California Code of Regulations, Title 24, Part 2, 2013 California Building Code (CBC), Chapters 16 and 18.

California Department of Conservation, Division of Mines and Geology (CDMG), 2002, California Geomorphic Provinces, Note #36.

CDMG, 2008, Special Publication 117a, Guidelines for Evaluating and Mitigating Seismic Hazards in California.

CDMG, 1998, Seismic Hazard Zone Report for the Burbank 7.5-Minute Quadrange, Los Angeles County, California, Seismic Hazard Zone Report 016.

CDMG, 1994, Fault Activity Map of California and Adjacent Areas with Locations and Ages of Recent Volcanic Eruptions, Scale 1:750,000.

California Geological Survey (CGS), 2008, http://www.consrv.ca.gov/cgs.

CGS, 2003, Geologic Map of the Long Beach 30' x 60' Quadrangle, California, Version 1.0.

Martin, G.R. and Lew, M., 1999, Recommended Procedures for Implementation of DMG Special Publication 117 Guidelines for Analyzing and Mitigating Seismic Hazards in California.

Seed, H.B. and Idriss, I.M., 1982, "Ground Motions and Soil Liquefaction During Earthquakes," ERE.

Seed, H.B., Tokimatsu, K., Harder L.F., and Chung, R.M., 1985, "Influence of SPT Procedures in Soil Liquefaction Resistance Evaluations," American Society of Civil Engineers, Journal of Geotechnical Engineering.

Seed, R.B, et al., April 30, 2003, Recent Advances in Soil Liquefaction Engineering: A unified and Consistent Framework, College of Engineering, University of California, Berkley, Report No. EERC 2003-06.

United States Geologic Survey, 2008, 2008 Interactive Deaggregations, http://geohazards.usgs.gov/deaggint/2008/

USGS, 1966, Burbank, California Quadrangle, 7.5 Minute Series (topographic), scale 1:24,000, photo revised 1972, minor revision 1994.

# FIGURES

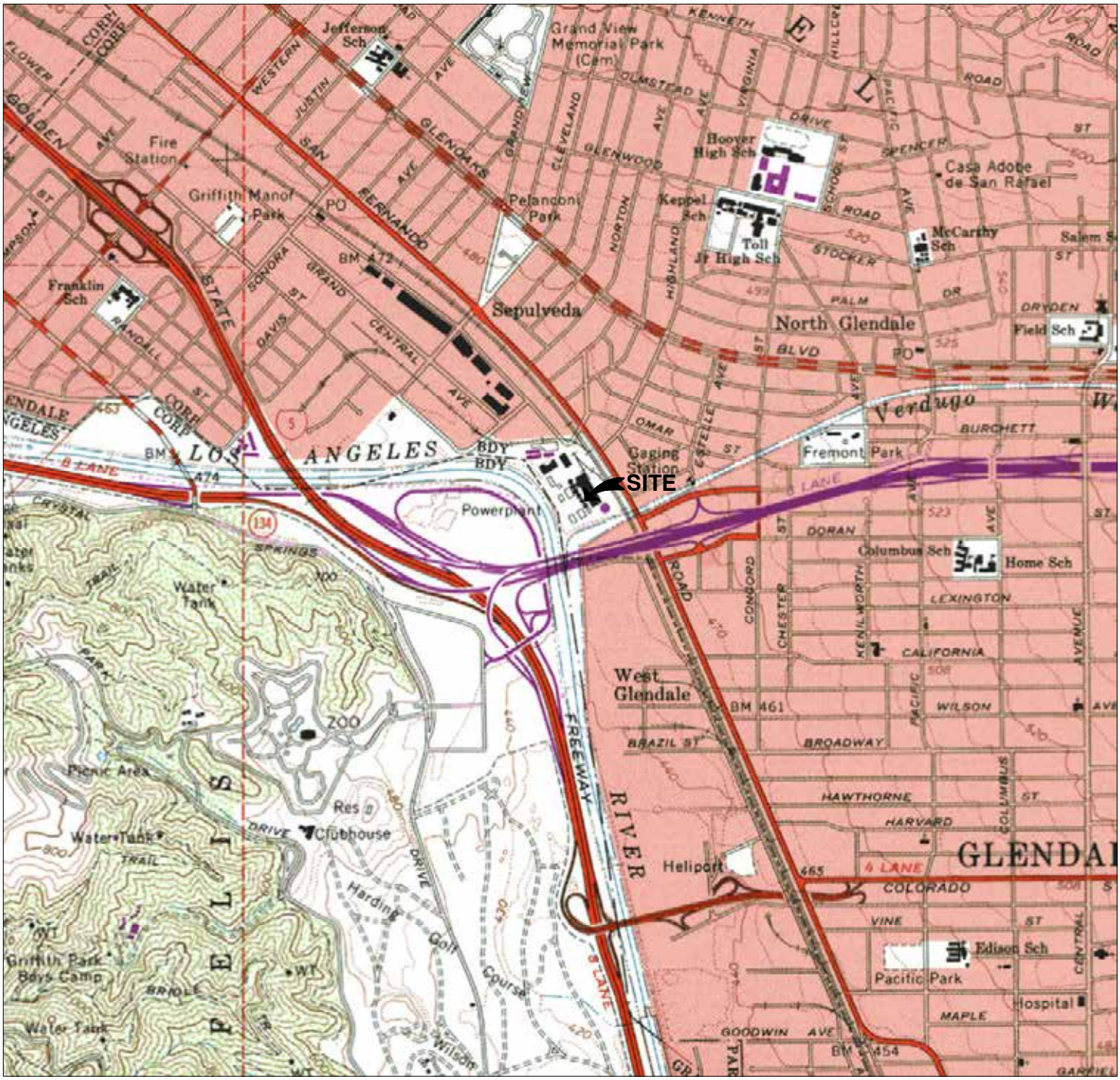


N

CALIFORNIA

1 1/2 0 1

SCALE IN MILE

1000 0 1000 2000 3000 4000 5000 6000 7000

SCALE IN FEET

REFERENCE: USGS 7.5 X 15 MINUTE QUADRANGLE;BURBANK, 1965, PHOTOREVISED 1972..

Stantec

25864-F BUSINESS CENTER DRIVE
REDLANDS, CA 92374
PHONE:(909) 335-6116 FAX:(909) 335-6120

FOR:

GRAYSON POWER PLANT
800 AIR WAY
GLENDALE, CALIFORNIA

SITE LOCATION MAP

FIGURE: 1

| JOB NUMBER: | DRAWN BY: | CHECKED BY: | APPROVED BY: | DATE: |
|---|---|---|---|---|
| 2057123300 | JEF | JEF | JEF | 12/9/15 |

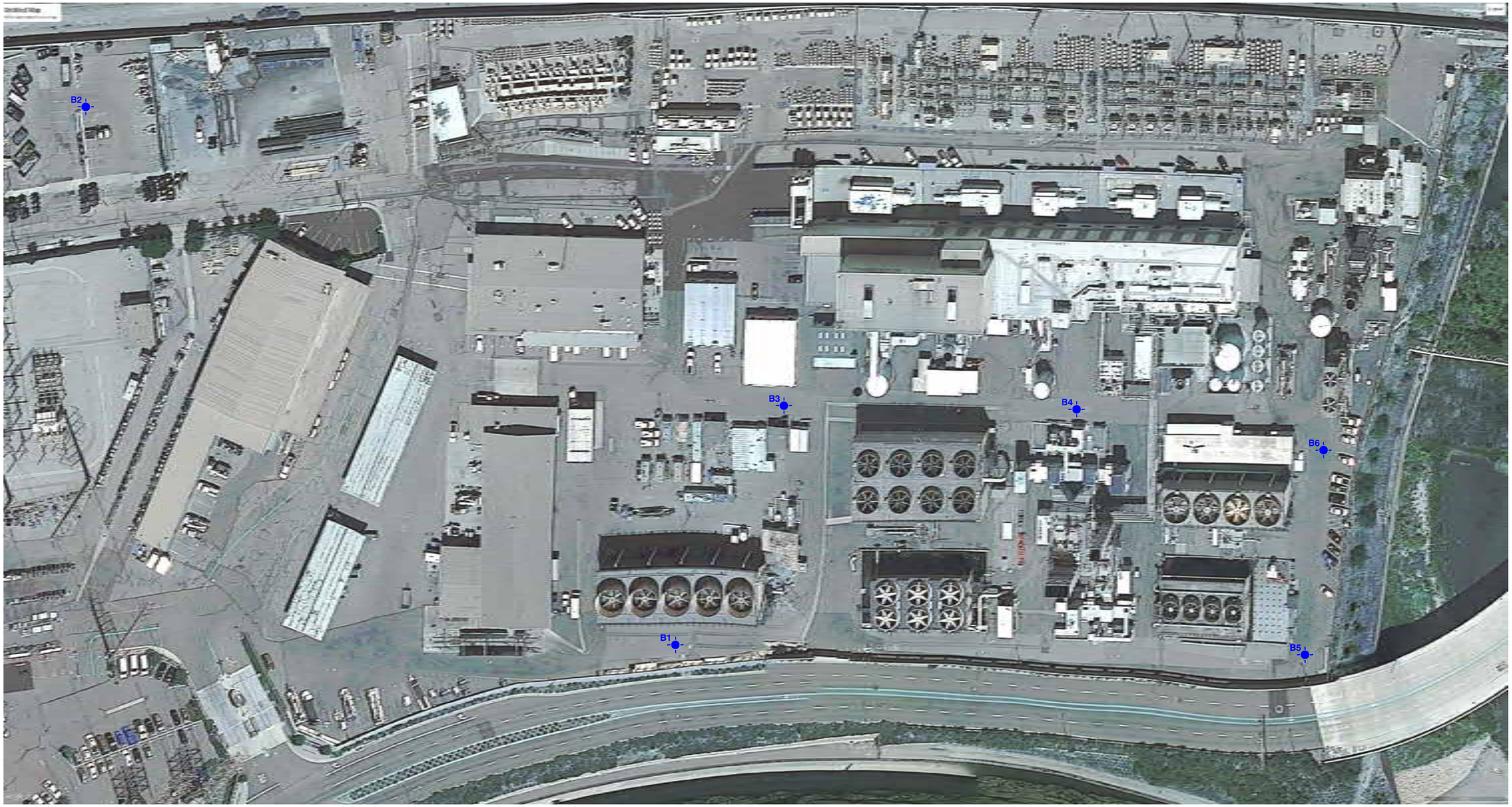


**EXPLANATION**

B6 APPROXIMATE SOIL BORING LOCATION

N

0 100 200

APPROXIMATE SCALE (FEET)

Stantec
25864-F BUSINESS CENTER DRIVE
REDLANDS, CA 92374
PHONE: (909) 335-6116 FAX: (909) 335-6120

| FOR: | | | FIGURE: |
|---|---|---|---|
| GRAYSON POWER PLANT<br>800 AIR WAY<br>GLENDALE, CALIFORNIA | | SITE PLAN | 2 |
| JOB NUMBER: 2057123300 | DRAWN BY: JEF | CHECKED BY: JEF | APPROVED BY: JEF | DATE: 12/9/15 |

FILEPATH:V:\1858\active\2057123300\05_report_deliv\dwgs_design\cad_figures\glendale_power_plant_figures.dwg modified by jfischer on Dec 17, 2015 at 9:52

# APPENDIX A
# LABORATORY TEST RESULTS

Stantec

# Gradation Analysis
ASTM D 422

Project Name: Grayson Power Plant
Source: B1-2

Project Number: 2057123300
Lab ID: B1-2
Date Received: 11-12-2015
Preparation Date: 11-21-2015
Test Date: 11-22-2015

Preparation Method: ASTM D 1140 Method A
Particle Shape: Angular
Particle Hardness: Hard and Durable
Sample Dry Mass (g): 260.10
Moisture Content (%): 14.6

Analysis based on total sample.

| Sieve Size | Grams Retained | % Retained | % Passing |
|---|---|---|---|
| | | | |
| | | | |
| | | | |
| | | | |
| | | | |
| 3/4" | 0.00 | 0.0 | 100.0 |
| 1/2" | 0.00 | 0.0 | 100.0 |
| 3/8" | 0.00 | 0.0 | 100.0 |
| No. 4 | 0.00 | 0.0 | 100.0 |
| No. 8 | 2.40 | 0.9 | 99.1 |
| No. 16 | 8.10 | 3.1 | 96.0 |
| No. 30 | 17.40 | 6.7 | 89.3 |
| No. 50 | 32.70 | 12.6 | 76.7 |
| No. 100 | 47.20 | 18.1 | 58.6 |
| No. 200 | 42.30 | 16.3 | 42.3 |
| Pan | 110.00 | 42.3 | --- |

% Gravel: 0.0
% Sand: 57.7
% Fines: 42.3
Fines Classification: ML

$D_{10}$ (mm): N/A
$D_{30}$ (mm): N/A
$D_{60}$ (mm): N/A

Cu: N/A
Cc: N/A

Classification
Silty Sand (SM)

Classification determined by ASTM D 2487. -200 material classification determined by visual assessment ASTM D 2488.

## Particle Size Distribution

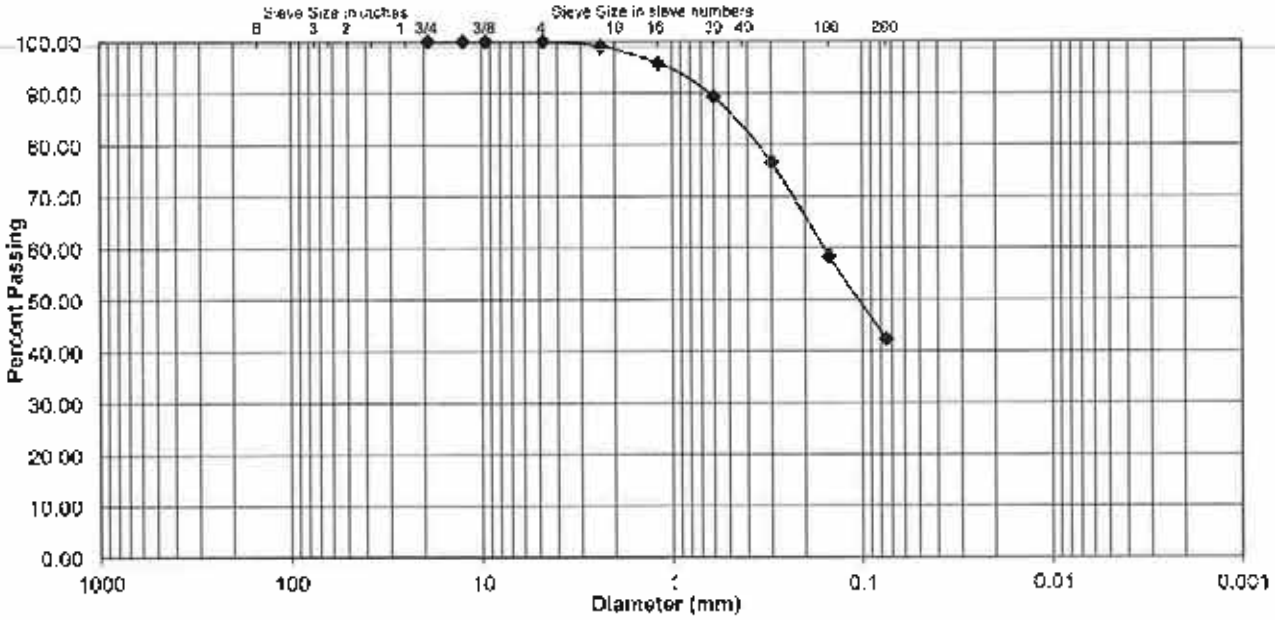


Comments

Reviewed By

Stantec

# Gradation Analysis
ASTM D 422

Project Name: Grayson Power Plant
Source: B1-55

Project Number: 2057123300
Lab ID: B1-55
Date Received: 11-12-2015
Preparation Date: 11-21-2015
Test Date: 11-22-2015

Preparation Method: ASTM D 1140 Method A
Particle Shape: Angular
Particle Hardness: Hard and Durable
Sample Dry Mass (g): 219.00
Moisture Content (%): 17.2

Analysis based on total sample.

| Sieve Size | Grams Retained | % Retained | % Passing |
|---|---|---|---|
| | | | |
| | | | |
| | | | |
| | | | |
| | | | |
| 3/4" | 0.00 | 0.0 | 100.0 |
| 1/2" | 0.00 | 0.0 | 100.0 |
| 3/8" | 0.00 | 0.0 | 100.0 |
| No. 4 | 5.10 | 2.3 | 97.7 |
| No. 8 | 6.10 | 2.8 | 94.9 |
| No. 16 | 19.00 | 8.7 | 86.2 |
| No. 30 | 52.50 | 24.0 | 62.2 |
| No. 50 | 70.90 | 32.4 | 29.9 |
| No. 100 | 40.00 | 18.3 | 11.6 |
| No. 200 | 12.40 | 5.7 | 5.9 |
| Pan | 13.00 | 5.9 | --- |

| | |
|---|---|
| % Gravel | 2.3 |
| % Sand | 91.7 |
| % Fines | 5.9 |
| Fines Classification | ML |
| $D_{10}$ (mm) | 0.1333 |
| $D_{30}$ (mm) | 0.3009 |
| $D_{60}$ (mm) | 0.5719 |
| Cu | 4.29 |
| Cc | 1.19 |

Classification

Poorly Graded Sand (SP-SM) with Silt

Classification determined by ASTM D 2487. -200 material classification determined by visual assessment. ASTM D 2488

## Particle Size Distribution

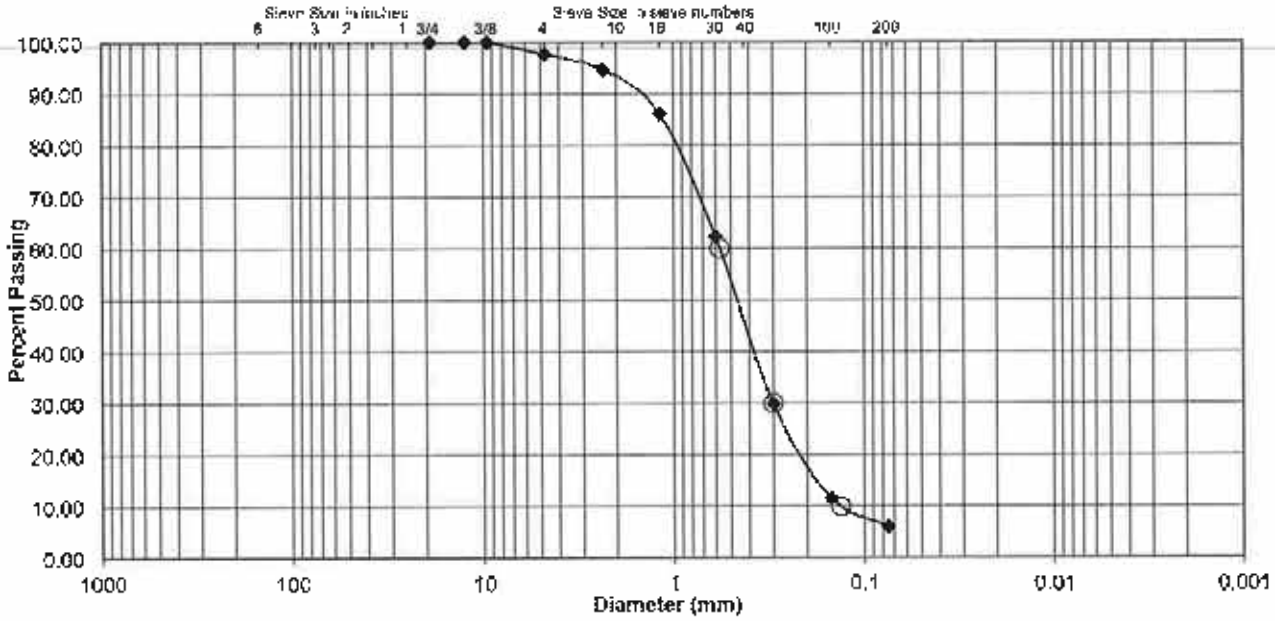


Comments

Reviewed By

Stantec

# Gradation Analysis
ASTM D 422

Project Name: Grayson Power Plant
Source: B2-2

Project Number: 2057123300
Lab ID: B2-2
Date Received: 11-12-2015
Preparation Date: 11-21-2015
Test Date: 11-22-2015

Preparation Method: ASTM D 1140 Method A
Particle Shape: Angular
Particle Hardness: Hard and Durable
Sample Dry Mass (g): 290.10
Moisture Content (%): 10.1

Analysis based on total sample.

| Sieve Size | Grams Retained | % Retained | % Passing |
|---|---|---|---|
| | | | |
| | | | |
| | | | |
| | | | |
| | | | |
| 3/4" | 0.00 | 0.0 | 100.0 |
| 1/2" | 0.00 | 0.0 | 100.0 |
| 3/8" | 3.20 | 1.1 | 98.9 |
| No. 4 | 2.20 | 0.8 | 98.1 |
| No. 8 | 2.80 | 1.0 | 97.2 |
| No. 16 | 4.50 | 1.6 | 95.6 |
| No. 30 | 7.30 | 2.5 | 93.1 |
| No. 50 | 14.40 | 5.0 | 88.1 |
| No. 100 | 30.40 | 10.5 | 77.7 |
| No. 200 | 48.80 | 16.8 | 60.8 |
| Pan | 176.50 | 60.8 | --- |

| | |
|---|---|
| % Gravel | 1.9 |
| % Sand | 37.3 |
| % Fines | 60.8 |
| Fines Classification | ML |
| $D_{10}$ (mm) | N/A |
| $D_{30}$ (mm) | N/A |
| $D_{60}$ (mm) | N/A |
| Cu | N/A |
| Cc | N/A |

## Particle Size Distribution

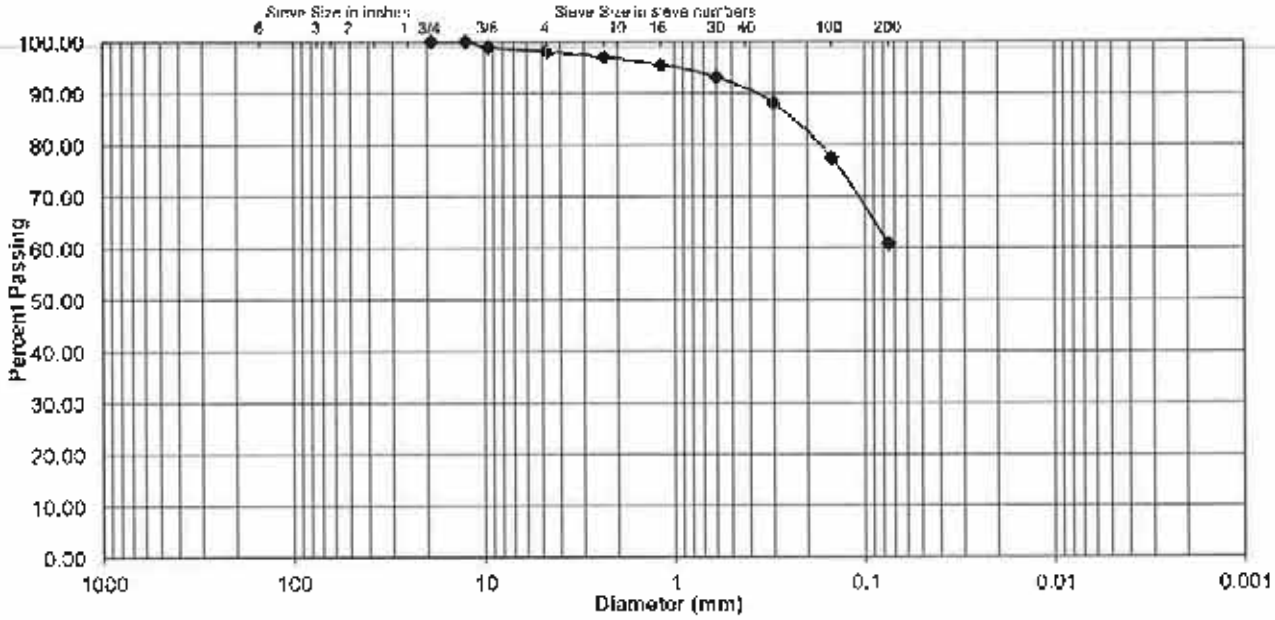


Comments

Reviewed By

File: grayson_b2-2_sieveanalysis Sheet: Report
Preparation Date: 1-2008
Revision Date: 4-2008

Stantec Consulting Services Inc.

Laboratory Document
Prepared By: JVK
Approved By: TLR

Stantec

# Gradation Analysis
ASTM D 422

Project Name: Grayson Power Plant
Source: B2-50

Project Number: 2057123300
Lab ID: B2-50
Date Received: 11-12-2015
Preparation Date: 11-21-2015
Test Date: 11-22-2015

Preparation Method: ASTM D 1140 Method A
Particle Shape: Angular
Particle Hardness: Hard and Durable
Sample Dry Mass (g): 369.80
Moisture Content (%): 8.2

Analysis based on total sample.

| Sieve Size | Grams Retained | % Retained | % Passing |
|---|---|---|---|
| | | | |
| | | | |
| | | | |
| | | | |
| | | | |
| 3/4" | 15.60 | 4.2 | 95.8 |
| 1/2" | 17.10 | 4.6 | 91.2 |
| 3/8" | 15.90 | 4.3 | 86.9 |
| No. 4 | 14.90 | 4.0 | 82.8 |
| No. 8 | 27.30 | 7.4 | 75.4 |
| No. 16 | 48.50 | 13.1 | 62.3 |
| No. 30 | 62.60 | 16.9 | 45.4 |
| No. 50 | 54.60 | 14.8 | 30.6 |
| No. 100 | 43.30 | 11.7 | 18.9 |
| No. 200 | 25.10 | 6.8 | 12.1 |
| Pan | 44.90 | 12.1 | --- |

% Gravel: 17.2
% Sand: 70.7
% Fines: 12.1
Fines Classification: ML

$D_{10}$ (mm): N/A
$D_{30}$ (mm): N/A
$D_{60}$ (mm): N/A

Cu: N/A
Cc: N/A

Classification
Silty Sand (SM) with Gravel

Classification determined by ASTM D 2487. -200 material classification determined by visual assessment, ASTM D 2488.

## Particle Size Distribution

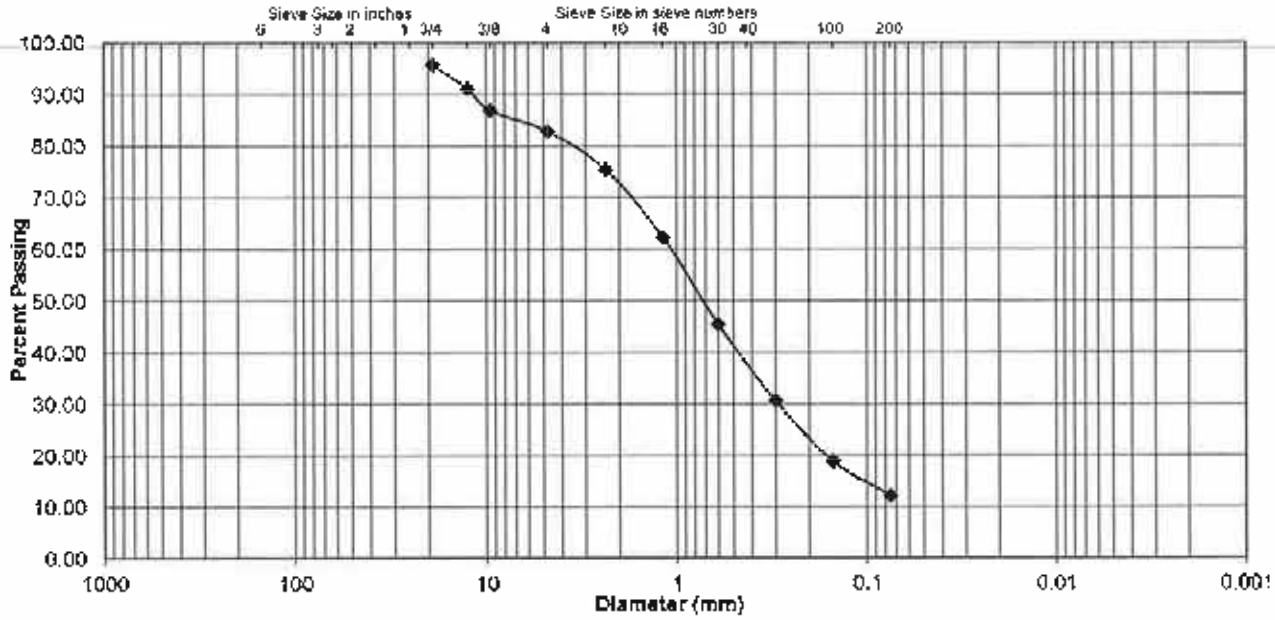


Comments

Reviewed By

Stantec

# Gradation Analysis
ASTM D 422

Project Name: Grayson Power Plant
Source: B3-2

Project Number: 2057123300
Lab ID: B3-2
Date Received: 11-12-2015
Preparation Date: 11-21-2015
Test Date: 11-22-2015

Preparation Method: ASTM D 1140 Method A
Particle Shape: Angular
Particle Hardness: Hard and Durable
Sample Dry Mass (g): 221.40
Moisture Content (%): 5.8

Analysis based on total sample.

| Sieve Size | Grams Retained | % Retained | % Passing |
|---|---|---|---|
| | | | |
| | | | |
| | | | |
| | | | |
| | | | |
| 3/4" | 0.00 | 0.0 | 100.0 |
| 1/2" | 0.00 | 0.0 | 100.0 |
| 3/8" | 0.00 | 0.0 | 100.0 |
| No. 4 | 3.40 | 1.5 | 98.5 |
| No. 8 | 5.10 | 2.3 | 96.2 |
| No. 16 | 16.90 | 7.6 | 88.5 |
| No. 30 | 29.50 | 13.3 | 75.2 |
| No. 50 | 41.70 | 18.8 | 56.4 |
| No. 100 | 41.60 | 18.8 | 37.6 |
| No. 200 | 29.70 | 13.4 | 24.2 |
| Pan | 53.50 | 24.2 | --- |

| | |
|---|---|
| % Gravel | 1.5 |
| % Sand | 74.3 |
| % Fines | 24.2 |
| Fines Classification | ML |
| $D_{10}$ (mm) | N/A |
| $D_{30}$ (mm) | N/A |
| $D_{60}$ (mm) | N/A |
| Cu | N/A |
| Cc | N/A |

Classification
Silty Sand (SM)

Classification determined by ASTM D 2487. -200 material classification determined by visual assessment, ASTM D 2488

## Particle Size Distribution

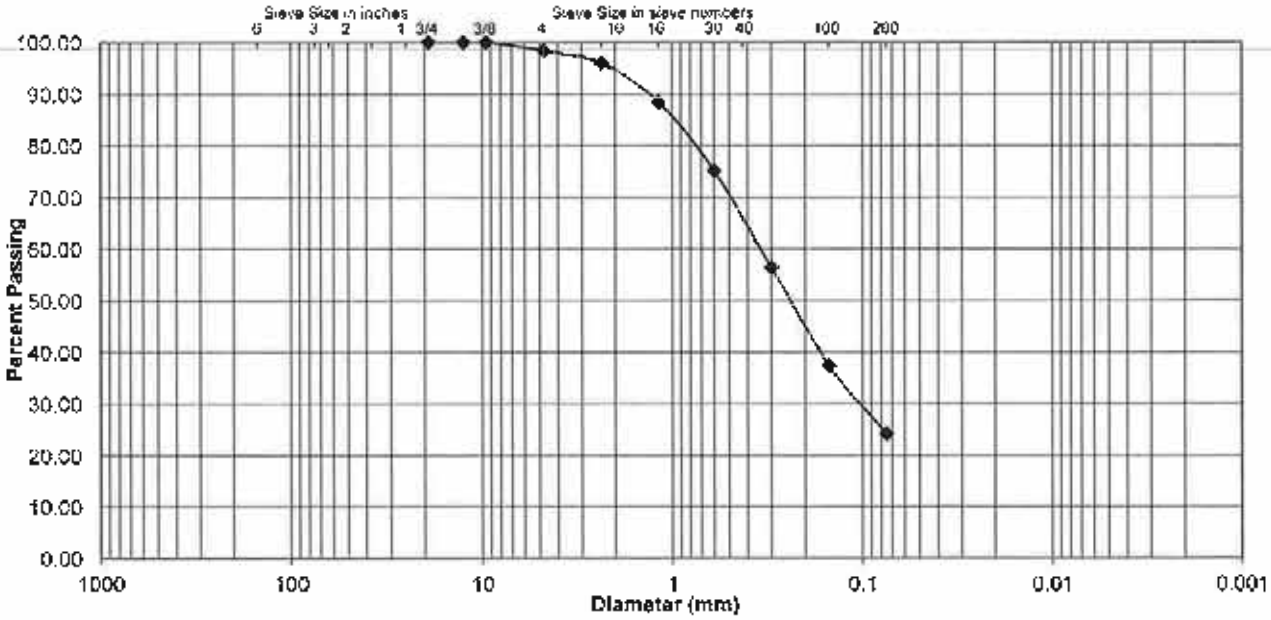


Comments

Reviewed By

File: grayson b3-2 sieve.xlsm Sheet: Report
Preparation Date: 1-2008
Revision Date: 4-2008

Stantec Consulting Services Inc.

Laboratory Document
Prepared By: JW
Approved By: TLK

Stantec

# Gradation Analysis
ASTM D 422

Project Name Grayson Power Plant
Source B3-35

Project Number 2057123300
Lab ID B3-35
Date Received 11-12-2015
Preparation Date 11-21-2015
Test Date 11-22-2015

Preparation Method ASTM D 1140 Method A
Particle Shape Angular
Particle Hardness Hard and Durable
Sample Dry Mass (g) 568.10
Moisture Content (%) 2.4

Analysis based on total sample.

| Sieve Size | Grams Retained | % Retained | % Passing |
|---|---|---|---|
| | | | |
| | | | |
| | | | |
| | | | |
| 1" | 31.80 | 5.6 | 94.4 |
| 3/4" | 36.40 | 6.4 | 88.0 |
| 1/2" | 25.80 | 4.5 | 83.5 |
| 3/8" | 37.10 | 6.5 | 76.9 |
| No. 4 | 57.20 | 10.1 | 66.9 |
| No. 8 | 51.90 | 9.1 | 57.7 |
| No. 16 | 51.60 | 9.1 | 48.6 |
| No. 30 | 76.90 | 13.5 | 35.1 |
| No. 50 | 80.60 | 14.2 | 20.9 |
| No. 100 | 45.50 | 8.0 | 12.9 |
| No. 200 | 25.50 | 4.5 | 8.4 |
| Pan | 47.80 | 8.4 | --- |

| | |
|---|---|
| % Gravel | 33.1 |
| % Sand | 58.4 |
| % Fines | 8.4 |
| Fines Classification | ML |
| $D_{10}$ (mm) | 0.0968 |
| $D_{30}$ (mm) | 0.4677 |
| $D_{60}$ (mm) | 2.8104 |
| Cu | 29.03 |
| Cc | 0.80 |

Classification

Poorly Graded Sand (SP-SM) with Silt and Gravel

Classification determined by ASTM D 2487. -200 material classification determined by visual assessment, ASTM D 2488.

## Particle Size Distribution

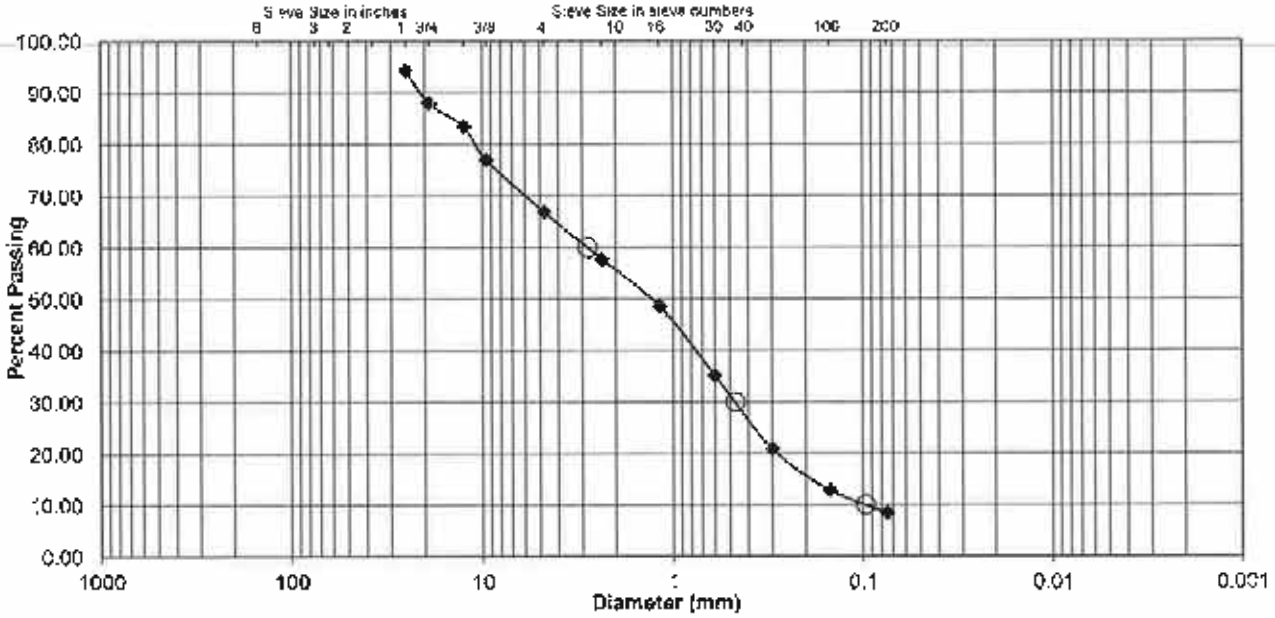


Comments

Reviewed By

Stantec

# Gradation Analysis
ASTM D 422

Project Name: Grayson Power Plant
Source: B3-50

Project Number: 2057123300
Lab ID: B3-50
Date Received: 11-12-2015
Preparation Date: 11-21-2015
Test Date: 11-22-2015

Preparation Method: ASTM D 1140 Method A
Particle Shape: Angular
Particle Hardness: Hard and Durable
Sample Dry Mass (g): 359.40
Moisture Content (%): 13.4

Analysis based on total sample.

| Sieve Size | Grams Retained | % Retained | % Passing |
|---|---|---|---|
| | | | |
| | | | |
| | | | |
| | | | |
| 1" | 0.00 | 0.0 | 100.0 |
| 3/4" | 0.00 | 0.0 | 100.0 |
| 1/2" | 19.40 | 5.4 | 94.6 |
| 3/8" | 7.80 | 2.2 | 92.4 |
| No. 4 | 19.00 | 5.3 | 87.1 |
| No. 8 | 28.90 | 8.0 | 79.1 |
| No. 16 | 56.00 | 15.6 | 63.5 |
| No. 30 | 90.70 | 25.2 | 38.3 |
| No. 50 | 72.30 | 20.1 | 18.2 |
| No. 100 | 30.60 | 8.5 | 9.7 |
| No. 200 | 13.70 | 3.8 | 5.8 |
| Pan | 21.00 | 5.8 | --- |

| | |
|---|---|
| % Gravel | 12.9 |
| % Sand | 81.3 |
| % Fines | 5.8 |
| Fines Classification | ML |
| $D_{10}$ (mm) | 0.1643 |
| $D_{30}$ (mm) | 0.4510 |
| $D_{60}$ (mm) | 1.0737 |
| Cu | 6.54 |
| Cc | 1.15 |

Classification

Well Graded Sand (SW-SM) with Silt

Classification determined by ASTM D 2487. -200 material classification determined by visual assessment, ASTM D 2488.

## Particle Size Distribution

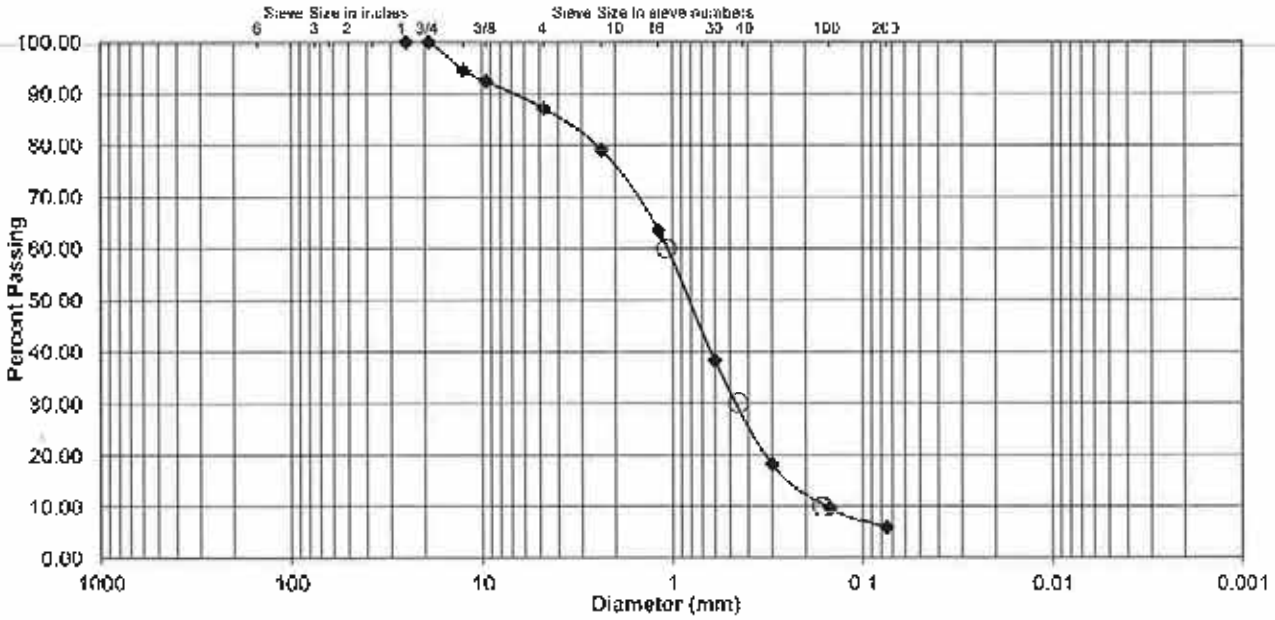


Comments

Reviewed By

Stantec

# Gradation Analysis
ASTM D 422

Project Name Grayson Power Plant
Source B4-2

Project Number 2057123300
Lab ID B4-2
Date Received 11-12-2015
Preparation Date 11-21-2015
Test Date 11-22-2015

Preparation Method ASTM D 1140 Method A
Particle Shape Angular
Particle Hardness Hard and Durable
Sample Dry Mass (g) 376.70
Moisture Content (%) 10.3

Analysis based on total sample.

| Sieve Size | Grams Retained | % Retained | % Passing |
|---|---|---|---|
| | | | |
| | | | |
| | | | |
| | | | |
| 1" | 0.00 | 0.0 | 100.0 |
| 3/4" | 0.00 | 0.0 | 100.0 |
| 1/2" | 0.00 | 0.0 | 100.0 |
| 3/8" | 0.00 | 0.0 | 100.0 |
| No. 4 | 3.00 | 0.8 | 99.2 |
| No. 8 | 4.50 | 1.2 | 98.0 |
| No. 16 | 13.50 | 3.6 | 94.4 |
| No. 30 | 28.20 | 7.5 | 86.9 |
| No. 50 | 61.20 | 16.2 | 70.7 |
| No. 100 | 83.80 | 22.2 | 48.4 |
| No. 200 | 68.40 | 18.2 | 30.3 |
| Pan | 114.10 | 30.3 | --- |

| | |
|---|---|
| % Gravel | 0.8 |
| % Sand | 68.9 |
| % Fines | 30.3 |
| Fines Classification | ML |
| $D_{10}$ (mm) | N/A |
| $D_{30}$ (mm) | N/A |
| $D_{60}$ (mm) | N/A |
| Cu | N/A |
| Cc | N/A |

Classification

Silty Sand (SM)

Classification determined by ASTM D 2487. -200 material classification determined by visual assessment, ASTM D 2488.

## Particle Size Distribution

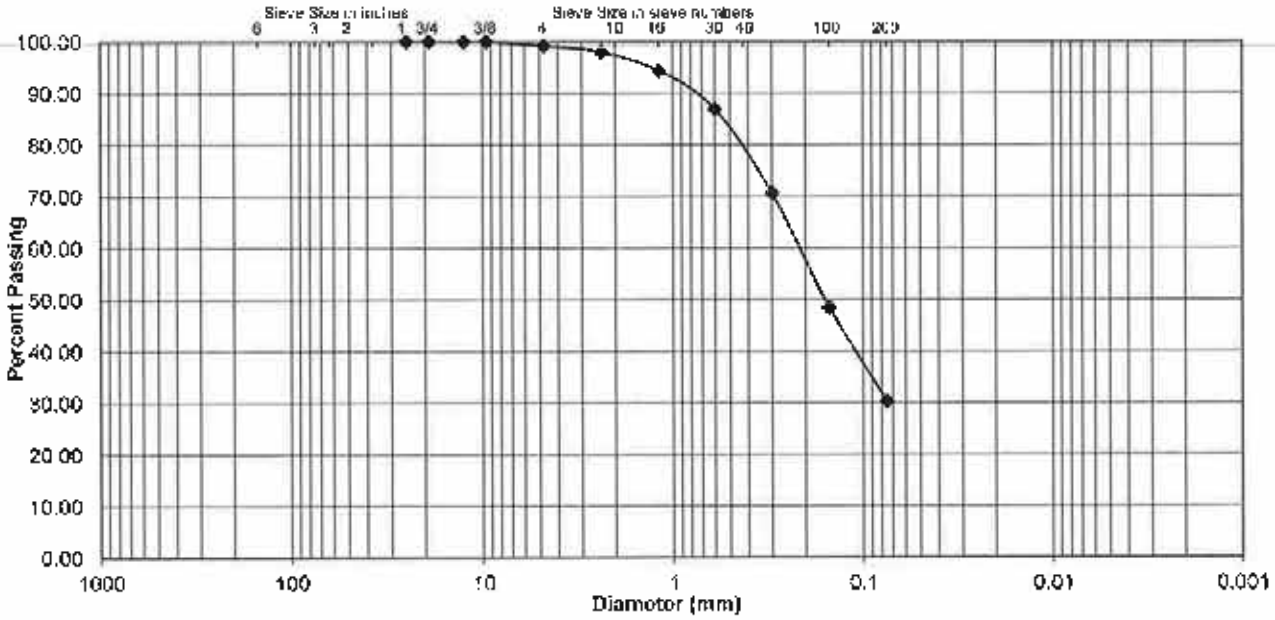


Comments

Reviewed By

File: grayson_b4-2_sieve.xlsm Sheet: Report
Preparation Date: 1-2008
Revision Date: 4-2009

Stantec Consulting Services Inc.

Laboratory Document
Prepared By: JW
Approved By: TLK

Stantec

# Gradation Analysis
ASTM D 422

Project Name: Grayson Power Plant
Source: B4-7

Project Number: 2057123300
Lab ID: B4-7
Date Received: 11-12-2015
Preparation Date: 11-21-2015
Test Date: 11-22-2015

Preparation Method: ASTM D 1140 Method A
Particle Shape: Angular
Particle Hardness: Hard and Durable
Sample Dry Mass (g): 369.30
Moisture Content (%): 4.6

Analysis based on total sample.

| Sieve Size | Grams Retained | % Retained | % Passing |
|---|---|---|---|
| | | | |
| | | | |
| | | | |
| | | | |
| 1" | 0.00 | 0.0 | 100.0 |
| 3/4" | 0.00 | 0.0 | 100.0 |
| 1/2" | 13.70 | 3.7 | 96.3 |
| 3/8" | 2.90 | 0.8 | 95.5 |
| No. 4 | 3.70 | 1.0 | 94.5 |
| No. 8 | 28.40 | 7.7 | 86.8 |
| No. 16 | 68.70 | 18.6 | 68.2 |
| No. 30 | 92.90 | 25.2 | 43.1 |
| No. 50 | 75.50 | 20.4 | 22.6 |
| No. 100 | 40.90 | 11.1 | 11.5 |
| No. 200 | 20.20 | 5.5 | 6.1 |
| Pan | 22.40 | 6.1 | --- |

| | |
|---|---|
| % Gravel | 5.5 |
| % Sand | 88.4 |
| % Fines | 6.1 |
| Fines Classification | ML |
| $D_{10}$ (mm) | 0.1335 |
| $D_{30}$ (mm) | 0.3854 |
| $D_{60}$ (mm) | 0.9463 |
| Cu | 7.09 |
| Cc | 1.18 |

Classification

Well Graded Sand (SW-SM) with Silt

Classification determined by ASTM D 2487. -200 material classification determined by visual assessment, ASTM D 2488.

## Particle Size Distribution

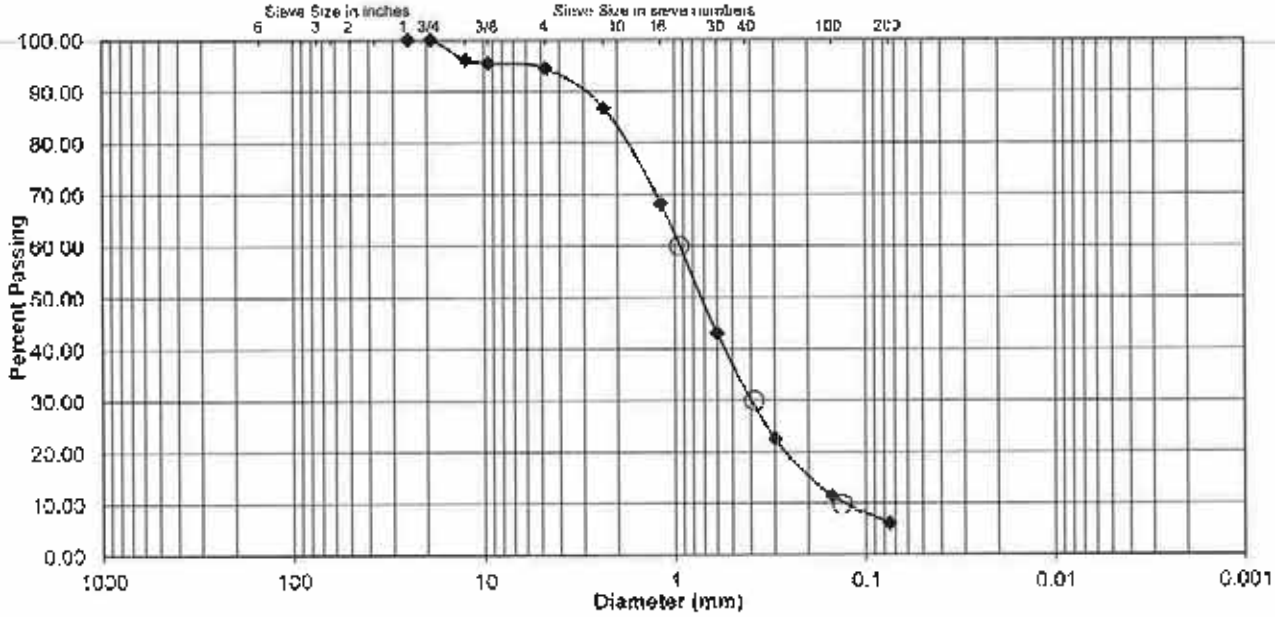


Comments

Reviewed By

Stantec

# Gradation Analysis
ASTM D 422

Project Name: Grayson Power Plant
Source: B4-50

Project Number: 2057123300
Lab ID: B4-50
Date Received: 11-12-2015
Preparation Date: 11-21-2015
Test Date: 11-22-2015

Preparation Method: ASTM D 1140 Method A
Particle Shape: Angular
Particle Hardness: Hard and Durable
Sample Dry Mass (g): 316.10
Moisture Content (%): 17.8

Analysis based on total sample.

| Sieve Size | Grams Retained | % Retained | % Passing |
|---|---|---|---|
| | | | |
| | | | |
| | | | |
| | | | |
| 1" | 0.00 | 0.0 | 100.0 |
| 3/4" | 0.00 | 0.0 | 100.0 |
| 1/2" | 0.00 | 0.0 | 100.0 |
| 3/8" | 0.00 | 0.0 | 100.0 |
| No. 4 | 0.00 | 0.0 | 100.0 |
| No. 8 | 3.80 | 1.2 | 98.8 |
| No. 16 | 16.40 | 5.2 | 93.6 |
| No. 30 | 30.80 | 9.7 | 83.9 |
| No. 50 | 98.60 | 31.2 | 52.7 |
| No. 100 | 86.50 | 27.4 | 25.3 |
| No. 200 | 31.60 | 10.0 | 15.3 |
| Pan | 48.40 | 15.3 | --- |

| | |
|---|---|
| % Gravel | 0.0 |
| % Sand | 84.7 |
| % Fines | 15.3 |
| Fines Classification | ML |
| $D_{10}$ (mm) | N/A |
| $D_{30}$ (mm) | N/A |
| $D_{60}$ (mm) | N/A |
| Cu | N/A |
| Cc | N/A |

Classification

Silty Sand (SM)

Classification determined by ASTM D 2487. -200 material classification determined by visual assessment, ASTM D 2488.

## Particle Size Distribution

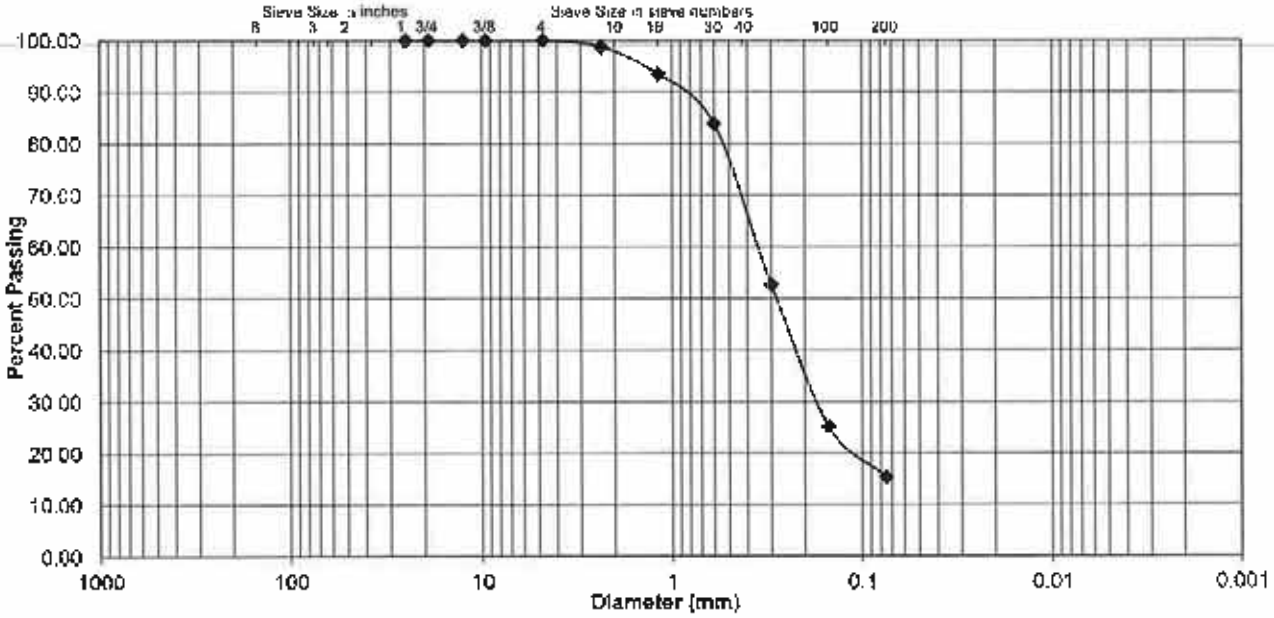


Comments

Reviewed By

File: grayson_b4 50_sieve.xlsm Sieve Report
Preparation Date: 1-2008
Revision Date: 4-2008

Stantec Consulting Services Inc.

Laboratory Document
Prepared By: JW
Approved By: TLK

Stantec

# Gradation Analysis
ASTM D 422

Project Name Grayson Power Plant
Source B5-2

Project Number 2057123300
Lab ID B5-2
Date Received 11-12-2015
Preparation Date 11-21-2015
Test Date 11-22-2015

Preparation Method ASTM D 1140 Method A
Particle Shape Angular
Particle Hardness Hard and Durable
Sample Dry Mass (g) 216.10
Moisture Content (%) 8.3

Analysis based on total sample.

| Sieve Size | Grams Retained | % Retained | % Passing |
|---|---|---|---|
| | | | |
| | | | |
| | | | |
| | | | |
| 1" | 0.00 | 0.0 | 100.0 |
| 3/4" | 17.90 | 8.3 | 91.7 |
| 1/2" | 0.00 | 0.0 | 91.7 |
| 3/8" | 4.50 | 2.1 | 89.6 |
| No. 4 | 6.30 | 2.9 | 86.7 |
| No. 8 | 13.60 | 6.3 | 80.4 |
| No. 16 | 20.10 | 9.3 | 71.1 |
| No. 30 | 25.00 | 11.6 | 59.6 |
| No. 50 | 29.10 | 13.5 | 46.1 |
| No. 100 | 26.50 | 12.3 | 33.8 |
| No. 200 | 20.30 | 9.4 | 24.4 |
| Pan | 52.80 | 24.4 | --- |

| | |
|---|---|
| % Gravel | 13.3 |
| % Sand | 62.3 |
| % Fines | 24.4 |
| Fines Classification | ML |
| $D_{10}$ (mm) | N/A |
| $D_{30}$ (mm) | N/A |
| $D_{60}$ (mm) | N/A |
| Cu | N/A |
| Cc | N/A |

Classification

Silty Sand (SM)

Classification determined by ASTM D 2487. -200 material classification determined by visual assessment ASTM D 2488.

## Particle Size Distribution

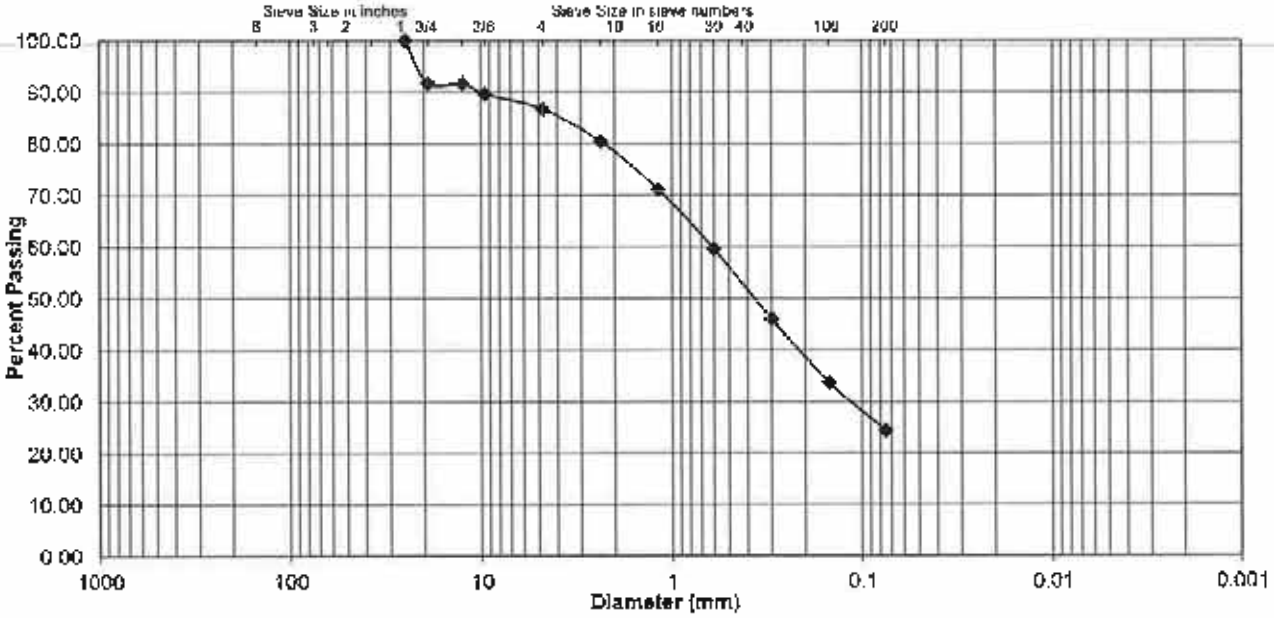


Comments

Reviewed By

Stantec

# Gradation Analysis
ASTM D 422

Project Name: Grayson Power Plant
Source: B5-50

Project Number: 2057123300
Lab ID: B5-50
Date Received: 11-12-2015
Preparation Date: 11-21-2015
Test Date: 11-22-2015

Preparation Method: ASTM D 1140 Method A
Particle Shape: Angular
Particle Hardness: Hard and Durable
Sample Dry Mass (g): 402.00
Moisture Content (%): 15.5

Analysis based on total sample.

| Sieve Size | Grams Retained | % Retained | % Passing |
|---|---|---|---|
| | | | |
| | | | |
| | | | |
| | | | |
| 1" | 0.00 | 0.0 | 100.0 |
| 3/4" | 0.00 | 0.0 | 100.0 |
| 1/2" | 0.00 | 0.0 | 100.0 |
| 3/8" | 1.60 | 0.4 | 99.6 |
| No. 4 | 3.40 | 0.8 | 98.8 |
| No. 8 | 7.00 | 1.7 | 97.0 |
| No. 16 | 19.40 | 4.8 | 92.2 |
| No. 30 | 52.70 | 13.1 | 79.1 |
| No. 50 | 131.70 | 32.8 | 46.3 |
| No. 100 | 97.30 | 24.2 | 22.1 |
| No. 200 | 43.20 | 10.7 | 11.4 |
| Pan | 45.70 | 11.4 | -- |

| | |
|---|---|
| % Gravel | 1.2 |
| % Sand | 87.4 |
| % Fines | 11.4 |
| Fines Classification | ML |
| $D_{10}$ (mm) | 0.0697 |
| $D_{30}$ (mm) | 0.1880 |
| $D_{60}$ (mm) | 0.4007 |
| Cu | 5.75 |
| Cc | 1.27 |

Classification:
Poorly Graded Sand (SP-SM) with Silt

Classification determined by ASTM D 2487. -200 material classification determined by visual assessment, ASTM D 2488.

## Particle Size Distribution

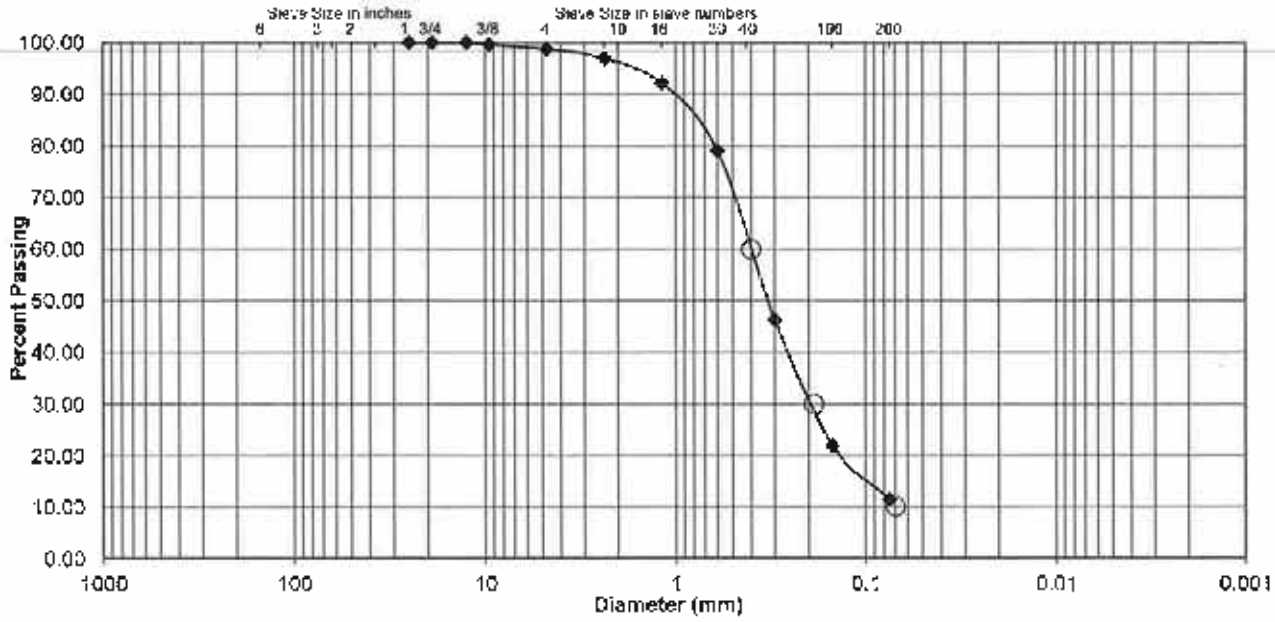


Comments

Reviewed By

# E.4 SOIL MANAGEMENT PLAN

# SOIL MANAGEMENT PLAN

Grayson Repowering Project
City of Glendale

Prepared for:
City of Glendale Water and Power
141 North Glendale Avenue
Glendale, California 91206

Prepared by:
Stantec Consulting Services Inc.
290 Conejo Ridge Avenue
Thousand Oaks, California 91361

July 9, 2017

# Table of Contents

**ABBREVIATIONS** ..... **III**

**1.0 INTRODUCTION** ..... **1.1**
1.1 PURPOSE ..... 1.1

**2.0 SITE DESCRIPTION** ..... **2.1**
2.1 PROPERTY LOCATION AND DESCRIPTION ..... 2.1
2.2 SITE AND VICINITY CHARACTERISTICS ..... 2.1
2.2.1 General Property Type & Use ..... 2.1
2.2.2 General Type & Use of Surrounding Areas ..... 2.1
2.2.3 Property Size ..... 2.2
2.2.4 Buildings/Structures on the Property ..... 2.2
2.2.5 Proposed Redevelopment Plans ..... 2.2
2.2.6 Topography ..... 2.3

**3.0 ENVIRONMENTAL CONSIDERATIONS** ..... **3.1**
3.1 SUMMARY OF KEY FINDINGS – PHASE I ESA, STANTEC, JULY 14, 2016 ..... 3.1
3.2 SUMMARY OF KEY FINDINGS – DRAFT PHASE II ESA, STANTEC, JULY 8, 2016 ..... 3.2
3.3 POTENTIAL CONTAMINANT SOURCES ..... 3.4

**4.0 POTENTIAL EXPOSURE PATHWAYS AND RECEPTORS** ..... **4.1**

**5.0 GENERAL PERMITTING AND NOTIFICATIONS** ..... **5.1**
5.1 NOTIFICATION PROCEDURE FOR ENCOUNTERING IMPACTED SOIL ..... 5.1

**6.0 EXCAVATION PROTOCOL AND PROCEDURES** ..... **6.1**

**7.0 MANAGEMENT OF POTENTIALLY IMPACTED EXCAVATED SOIL** ..... **7.1**
7.1 STOCKPILE AND/OR CONTAINERIZED SOIL CHARACTERIZATION ..... 7.1
7.2 SOIL MANAGEMENT FOR POTENTIALLY IMPACTED SOIL ..... 7.3
7.2.1 Step One ..... 7.3
7.2.2 Step Two ..... 7.3
7.2.3 Step Three ..... 7.4
7.2.4 Step Four ..... 7.4
7.2.5 Step Five ..... 7.4
7.3 SAMPLING METHODS ..... 7.5
7.4 SOIL DISPOSAL ..... 7.5

**8.0 AIR QUALITY MANAGEMENT PLAN** ..... **8.1**

**9.0 MANAGEMENT OF DEMOLITION AND CONSTRUCTION WASTE** ..... **9.1**
9.1 NON-HAZARDOUS WASTES ..... 9.1
9.2 HAZARDOUS WASTES ..... 9.1

**10.0 BEST MANAGEMENT PRACTICES ..... 10.1**
10.1 WASTE MANAGEMENT & MATERIALS POLLUTION CONTROL BMPS ..... 10.1
10.2 NON-STORMWATER MANAGEMENT BMPS ..... 10.1
10.2.1 General ..... 10.2
10.2.2 Concrete Breakout ..... 10.2
10.2.3 Excavation ..... 10.3

**11.0 KEY CONTACT INFORMATION ..... 11.1**

**12.0 CLOSING ..... 12.1**

**13.0 REFERENCES ..... 13.1**

**LIST OF TABLES**

Table 1 Soil Management Plan Quick Reference Guide ..... iv
Table 2 VOCs ..... 3.5
Table 3 TPH ..... 3.6
Table 4 CAM Metals ..... 3.7
Table 5 Areas Recommended for Further Investigation and Classification Prior to Soil Disposal ..... 7.2

**LIST OF FIGURES**

Figure 1 – Site Location Map
Figure 2 – Site Vicinity Map
Figure 3 – Site Map with Soil VOCs Concentrations
Figure 4 – Site Map with Soil TPH Concentrations
Figure 5 - Site Map with Soil Lead and Arsenic Concentrations
Figure 6 – Site Map with Soil Vapor VOC Concentrations

**LIST OF APPENDICES**

**APPENDIX A LIMITATIONS ..... A.1**

**APPENDIX B BORING LOGS AND ANALYTICAL RESULTS ..... B.2**

**APPENDIX C PROCEDURE FOR SOIL SCREENING AND SOIL DISPOSAL DECISION DIAGRAM ..... C.3**

**APPENDIX D CASQA BEST MANAGEMENT PRACTICES (BMPS) ..... D.4**

# Abbreviations

| | |
|---|---|
| APN | Assessor's Parcel Number |
| ASTM | American Society of Testing and Materials |
| bgs | below ground surface |
| BMP | Best Management Practice |
| COC | chain-of-custody |
| DHS | California Department of Health Services |
| DWR | Department of Water Resources |
| DRO | Diesel Range Organics |
| EH&S | Environmental Health & Safety |
| EPA | Environmental Protection Agency |
| ESA | Environmental Site Assessment |
| HASP | Health and Safety Plan |
| LARWQCB | Los Angeles Regional Water Quality Control Board |
| mg/kg | Milligrams per Kilogram |
| OVA | Organic Vapor Analyzer |
| PCE | Tetrachloroethylene |
| PID | Photoionization Detector |
| PPE | Personal Protective Equipment |
| RCRA | Resource Conservation and Recovery Act |
| REC | Recognized Environmental Condition |
| RSL | Regional Screening Level |
| RWQCB | Regional Water Quality Control Board |
| SCAQMD | South Coast Air Quality Management District |
| SMP | Soil Management Plan |
| Stantec | Stantec Consulting Services Inc. |
| STLC | Soluble Threshold Limit Concentration |
| SWPPP | Storm Water Pollution Prevention Plan |
| TCLP | Toxicity Characteristic Leaching Procedure |
| TPH | Total Petroleum Hydrocarbons |
| TPHcc | Total Petroleum Hydrocarbons – Carbon Chain Distinction |
| USGS | United States Geological Survey |
| VOCs | Volatile Organic Compounds |

## Table 1 Soil Management Plan Quick Reference Guide

| | |
|---|---|
| **Property Description** | |
| Site Name: | Grayson Power Plant |
| Site Location: | 800 Air Way, Glendale, California 91201 |
| **Property Contacts** | |
| Property Owner: | **City of Glendale**<br>Department of Water and Power<br>141 North Glendale Avenue<br>Glendale, California, 91206 |
| Project Contact: | Mr. Steve Zurn<br>Phone: (818) 548-2107 |
| **City of Glendale Environmental Health & Safety Manager (EH&S)** | |
| Environmental | **Risk Manager, Environmental and Land Acquisition**<br>Project Contact: Mr. John Escudero<br>Power Plant Supervisor<br>Phone: (818) 548-3980<br>Mobile: |
| **Contractor Contacts** | |
| Environmental | **Stantec Consulting Services Inc.**<br>290 Conejo Ridge Ave, Thousand Oaks, CA 91361<br>Project Contacts:<br><br>Michael Weber<br>Michael.Weber@Stantec.com<br>Phone: (805) 719-9329<br>Mobile: (805) 477-8580<br><br>StephAnnie Roberts<br>StephAnnie.Roberts@Stantec.com<br>Phone: (805) 719-9332<br>Mobile: (805) 427-4873 |
| State of California Certified Laboratory | TBD |
| General Contractor(s) | TBD |
| Engineering/Dewatering | TBD |
| Asbestos/Lead Abatement | TBD |
| **Permits/Agency Notification Requirements** | |
| Grading Permit | TBD |
| Hot Work Permit | NA |
| Confined Space Entry Permit | Required if personnel will be entering on excavation deeper than feet |

| | |
|---|---|
| City of Glendale, Department of Public Works – Engineering Division/Land Development Section | Contractor must obtain a grading permit from the building official. The applicant shall first complete an application form at the Engineering Division office closest to the location of the job site. Each application shall describe the work to be covered by the permit including the grading quantities in cubic yards, the site address, contact information for the owner, permittee, engineer and contractor, and provide other information as may reasonable be required by the Division. |
| South Coast Air Quality Management District (SCAQMD) | Contractor to confirm that no permit is needed and advance written notice will be required a minimum of one week before excavation activities commence. BMPs need to be implemented for effective dust control management (confining generated dust to the boundaries of the Property). Any impacted soils should be covered and handled appropriately to prevent aeration and fugitive emissions (VOC off-gassing). |
| **Schedule** | |
| Demolition | TBD |
| Excavation | TBD |
| Rough Grading | TBD |
| Construction | TBD |
| **Project Personnel** | |
| Field Team Leader | TBD |
| **Waste Disposal Facilities** | |
| Construction Debris | Handled by general contactor(s) |
| Non-hazardous Soil | **Azusa Land Reclamation (Solids Disposal, Class II&III)**<br>1211 W. Gladstone<br>Azusa, CA 91702<br>Phone: (800) 963-4776<br><br>**Scholl Canyon Landfill**<br>3001 Scholl Canyon Road<br>Glendale, CA 91206<br>Phone: (818) 243-9779 |
| Hazardous Soil | **Clean Harbors Facility (Solids Disposal, Class I & II & III)**<br>1737 East Denni Street<br>Wilmington, CA 90744<br>Phone: (310) 835-9998 |
| Non-hazardous Liquids | **Azusa Land Reclamation (Liquids Disposal, Class II & III)**<br>1211 W. Gladstone<br>Azusa, CA 91702<br>Phone: (800) 963-4776 |
| Hazardous Water | **Clean Harbors Facility (Liquids Disposal, Class I & II & III)**<br>1737 East Denni Street<br>Wilmington, CA 90744<br>Phone: (310) 835-9998 |
| Other Related Plans: | NA |

# 1.0 INTRODUCTION

Stantec Consulting Services Inc. (Stantec) has prepared a Soil Management Plan (SMP) on behalf of the City of Glendale, Department for Water and Power (GWP) for the proposed redevelopment of a portion of the Power Plant Property "Grayson Repowering Project". The property is located to the northeast of the Interstate 5 and the Highway 134 interchange in Glendale, California (the "Site", Figures 1 and 2).

This SMP has been prepared to provide guidance to project management, site management, and field personnel on the identification and management of soil (both impacted and clean), and construction debris generated during demolition and removal of above- and below-ground equipment, as well as, trenching, excavation, grading, and construction activities performed at the Site in conjunction with the Grayson Repowering Project. This SMP is subject to the limitations provided in Appendix A.

## 1.1 PURPOSE

The purpose of this document is to provide administrative, procedural, and analytical guidance to expedite and clarify actions to be taken by GWP and its contractors in the event contaminated soil is encountered during Site redevelopment.

The SMP provides site-specific procedures and protocols to be utilized if contaminated soil is encountered during demolition/construction excavations and earth moving activities. Procedures and protocols are included to ensure that contaminated soil is excavated properly and efficiently, and that unacceptable risks are not posed to human health and the environment from contaminated soil.

The procedures provided in the SMP for the handling, stockpiling, and screening of excavated soils must be followed to properly profile the soil for either on-site re-use or disposal to a facility that is licensed to accept and/or recycle the waste generated. Waste handling and disposal must also comply with applicable state and federal guidelines.

Potential construction-related concerns such as noise, stormwater, air pollution, abatement of lead- and asbestos-containing materials, and mold are outside the scope of this guidance document. Additionally, the SMP applies only to the excavation of contaminated soils related to construction and redevelopment of the Site where time and space limitations are critical considerations, and where the excavated contaminated soil will be disposed off-Site. This SMP was prepared to support and provide guidance for GWP during demolition and construction of the Grayson Repowering Project; however, it does not consider any other remedial or soil treatment technologies, such as on-Site or in-situ treatment.

This SMP together with a site-specific health and safety plan (HASP) will incorporate policies and best management practices (BMPs) that will minimize potential impacts to human health and the environment during proposed Site redevelopment activities.

# 2.0 SITE DESCRIPTION

A description of the location and characteristics of the Site and surrounding area is presented in the following subsections. Figures 1 and 2, illustrate the location and current configuration of the Site.

## 2.1 PROPERTY LOCATION AND DESCRIPTION

| | |
|---|---|
| Property Address | 800 Air Way, Glendale, CA 91201 |
| Assessor's Parcel Number (APN) | 5593-003-906 and portions of APN 5627-020-908 (total: 12.40 acres) within the City of Glendale |
| Key Contact | Mr. Steven Zurn<br>General Manager<br>Glendale Water and Power |

## 2.2 SITE AND VICINITY CHARACTERISTICS

### 2.2.1 General Property Type & Use

The Site located at 800 Air Way, Glendale, California consists of approximately 12.40 acres of land (see Figure 2) and is located in an urban setting. The Property reportedly has operated as a power plant since 1934, prior to which it was reportedly vacant and undeveloped land.

### 2.2.2 General Type & Use of Surrounding Areas

The Property is located in an industrial/urban development of Glendale. Surrounding properties include combination of commercial and industrial properties.

| | |
|---|---|
| **NORTH** | Power Plant warehouse, parking, receiving station followed by Flower Street. |
| **SOUTH** | Verdugo Wash followed by Fairmont Avenue. |
| **EAST** | Railroad trucks owned by Southern California Regional Rail Authority followed by San Fernando Road. |
| **WEST** | Fairmont Avenue followed by Los Angeles River. |

Source: Stantec Phase I Environmental Site Assessment (Updated: July 14, 2016)

### 2.2.3 Property Size

According to Los Angeles County Office of the Assessor records obtained online at http://maps.assessor.lacounty.gov, the Site is identified as APN 5593-003-906 and portions of APN 5627-020-908 (12.40 acres), within the City of Glendale.

### 2.2.4 Buildings/Structures on the Property

The Site is currently operated as an electrical power plant, structures at the Site consist of the following:

- Five cooling towers;
- Three chemical storage areas;
- Reverse osmosis unit;
- Demineralized treatment water;
- Boiler room building;
- Switch rack;
- Five turbine rooms; and
- Maintenance building.

### 2.2.5 Proposed Redevelopment Plans

The Project is a power plant repowering project that removes 238 megawatts (MW) of existing old, inefficient, inflexible, and unreliable generation equipment that is past the end of its useful life, and replaces it with approximately 262 MW net, state-of-the-art, efficient equipment that better fits the requirements of the City of Glendale.

Project redevelopment will require the demolition and removal of the existing Grayson Power Plant Units 1, 2, 3, 4, 5, 8A, and 8B/C, their ancillary facilities, including the existing maintenance and operation buildings, cooling towers, water treatment facilities, and 34.5 switchrack (Figure 2).

New construction would include a two-story plant operations building, as well as a steam turbine generator building. Two, two-cell cooling towers would replace the five existing cooling towers.

This SMP does not include provisions for post-construction facility operation.

### 2.2.6 Topography

The United States Geological Survey (USGS) 7.5-Minute Topographic Map of Burbank, California (scale 1:24,000) was reviewed to identify local and regional physiographic features in the vicinity of the Site (Figure 1). Based on our review of this map, the Site is located at an elevation of approximately 467 feet above mean sea level, and the general topographic gradient is towards the northwest.

# 3.0 ENVIRONMENTAL CONSIDERATIONS

This section includes a summary of previous environmental investigations related to historic property use and potential for encountering soil impacts at the Site during redevelopment activities that include demolition, removal, grading, and construction activities at the Site.

Stantec has completed a Phase I Environmental Site Assessment (ESA) and Phase II ESA for the Property located at 800 Air Way in Glendale, California 91201 on behalf of GWP.

A summary of pertinent findings for both the Phase I ESA and Phase II ESA completed in 2016, are provided below, as presented in the following source documents:

- Stantec Consulting Services Inc., Phase I Environmental Site Assessment, Grayson Power Plant, 800 Air Way, Glendale, California 91201. Updated, July 14, 2016; and
- Stantec Consulting Services Inc., Phase II Environmental Site Assessment Report, Grayson Power Plant, 800 Air Way, Glendale, California 91201. July 8, 2016.

## 3.1 SUMMARY OF KEY FINDINGS – PHASE I ESA, STANTEC, JULY 14, 2016

During the Phase I Environmental Site Assessment the following recognized environmental conditions (RECs) were revealed in connection with the Property:

- Historical and current presence of three chemical storage areas which stored numerous petroleum hydrocarbons and hazardous chemicals in varying quantities;
- Existence of five cooling towers on the Property;
- Presence of five boilers and two HRSGs on the Property;
- Presence of numerous 55-gallon drums and barrels containing lube oil storage in the basement of the Boiler room building. Lube oil for pumps, turbines and air compressor; and synthetic jet engine oil was observed. Most drums were stored on secondary containment which was places on concrete floor. No spills/leaks were observed;
- Presence of at least seven fuel oil underground storage tanks (USTs) on the Property;
- Presence of former fuel oil and chemical containing aboveground storage tanks (ASTs);
- Historical and current storage of polychlorinated biphenyl (PCB) containing pad and pole-mounted transformers on the Property;
- Historical use of nearby property (1310 Air Way) as an airport; and
- Historical use of adjacent properties as gas stations.

## 3.2 SUMMARY OF KEY FINDINGS – DRAFT PHASE II ESA, STANTEC, JULY 8, 2016

Based on the findings of the Phase I ESA and the proposed redevelopment, Stantec conducted a limited Phase II ESA to evaluate subsurface conditions at the Site.

Between April 25 to May 3, 2016, Stantec oversaw the advancement of 16 soil borings (SB-1 through SB-16; Attachment B), which were continuously cored to maximum depths between approximately 11.5 and 50 feet below ground surface (bgs) across the Site. 15 temporary vapor probes were installed at six locations throughout the Site, probes ranged in depths from 5 to 30 feet bgs. Analytical results of soil samples and soil vapor samples are presented in Attachment B of this SMP.

A summary of pertinent findings is provided below:

- Soil Assessment (32 soil samples were collected from 16 borings):
    - Volatile organic compounds (VOCs) (benzene, toluene, xylenes, TCE, and acetone) were detected at low concentrations within four of the 32 soil samples collected (Figure 3). Detected concentrations were below the Regional Screening Levels (USEPA RSLs) for industrial and residential use and the San Francisco Regional Water Quality Control Board Environmental Screening Levels (SFRWQCB ESLs).
    - Total petroleum hydrocarbons (TPH) was identified above laboratory method detection levels (MDLs) in 22 soil samples, ranging from 1.1 to 27,000 milligrams per kilograms (mg/kg) total TPH (Figure 4). Based on the TPH carbon ranges, the contaminants appear to be diesel and fuel oil related petroleum. This analysis was conducted to identify potential areas in which petroleum related contamination may be present for soil management purposes during construction (Figure 4). It appears that highest TPH concentrations in soil were located in the center of the Site, to the northeast of Cooling Tower #4 at a depth of 25 feet bgs in boring SB-8 (27,000 mg/kg), and towards the southern portion of the Site, to the south of Cooling Tower #2 at a depth of 10 feet bgs in boring SB-1 (8,700 mg/kg).
    - Total TPH concentrations exceeding 50,000 mg/kg require additional laboratory testing to classify soils as California or Resource Conservation and Recovery Act (RCRA) Hazardous Materials. During Stantec's Phase II Investigation, Total TPH concentrations of samples collected from 16 soil borings did not exceed 27,000 mg/kg, classifying the initially assessed soil as non-hazardous material. The table below presents analytical results of samples with detectable concentrations of TPH; analytical data of all soil samples is provided in Attachment B.

- 16 surface samples were collected and analyzed for CAM 17 metals, with various metals detected in each sample (Figure 5). Arsenic was detected in all 16 soil samples collected from the soil borings at concentrations exceeding the USEPA RSLs for residential use and OEHHA screening levels for residential and industrial use. Lead was detected in two samples above OEHHA screening levels for residential use. A comparison of the arsenic and lead concentrations detected at the Property with California background metal concentrations indicates that these concentrations are within the typically occurring background range. All other detected metals are considered to be within the typical range for Southern California soil and are not present at concentrations exceeding the SFRWQCB ESLs, USEPA RSLs, or Office of Environmental Health Hazard Assessment (OEHHA) screening levels established for either residential or industrial use. There were no detectable concentrations of hexavalent chromium above laboratory MDLs in any of the soil samples analyzed.

- Lead concentrations above 50 mg/kg were detected in three surface soil samples collected in the center of the Site (SB-6, SB-12, and SB-13), concentrations exceeding 50 mg/kg require additional laboratory testing to determine leachability of lead. The results of Soluble Threshold Limit Concentration (STLC) and Toxicity Characteristic Leaching Procedure (TCLP) will determine the classification of these soils. The table below presents analytical results of samples with detectable concentrations of CAM metals; analytical data of all soil samples is provided in Attachment B.

- Localized shallow excavation approximately a 50' by 50' area to a depth of 2 feet bgs (after removal of asphalt cover) of these areas, stock piling, and soil sampling in accordance with procedures described in Section 7.1 are recommended to safely classify and subsequently dispose of soil.

- Should deeper excavation/grading be required in the areas near SB-6, SB-12, and SB-13, additional samples shall be collected and analyzed for CAM Metals, as previous investigations only assessed shallow CAM Metal concentrations. The excavated soil shall be stockpiled until analytical results are received and the material has been classified.

- Other CAM Metal concentrations encountered during Stantec's Phase II Investigation were below hazardous classification limit; higher metal concentrations may be detected in other areas of the Site.

- Soil Vapor Assessment (15 soil vapor samples were collected from six locations):

  - VOCs were detected in one or more of the soil vapor samples at concentrations above their respective screening levels. The detected concentrations were then evaluated using the HERO Vapor Intrusion Model. The HERO results indicated that

the detected concentrations posed an insignificant cancer risk and a low non-cancer hazard. Based on the site-specific calculation conducted using the HERO Vapor Intrusion Model, no further actions appear warranted to assess or mitigate the limited soil vapors identified at the site.

- Groundwater is not anticipated to be encountered during the Grayson Repowering Project; and therefore, has not been included in this SMP.

## 3.3 POTENTIAL CONTAMINANT SOURCES

Based on the results of the Phase I and II ESAs and laboratory analytical testing completed in 2016, impacts to soil suggest Site contamination may have originated from the historical or existing activities as an operating power plant and the storage/handling of hazardous substances and products containing VOCs, metals and petroleum hydrocarbons at the Property.

Based on the results of the analytical testing of soil in 2016, the following constituents of concern should be evaluated and analyzed for when excavating and screening soils during redevelopment of the Site:

- VOCs,
- TPH, and
- CAM Metals.

Stantec recommends air monitoring for VOCs in the construction working areas on an as needed basis if requested by GWP. Stantec assumes that requirements for dust monitoring throughout the demolition and construction project will be covered by GWP's selected Contractors for the demolition and for the engineer, procure, construction (EPC).

The tables below present analytical results of samples with detectable concentrations of VOCs, TPH, and CAM Metals; analytical data of all soil samples is provided in Attachment B.

## Table 2 VOCs

| Boring Number | Sample Depth (ft bgs) | Sample Number | Sample Date | 8260B (mg/kg) | | | | | |
|---|---|---|---|---|---|---|---|---|---|
| | | | | Acetone | Benzene | Toluene | m,p-Xylenes | TCE | Other VOCs |
| **SB-3** | 40 | SB-3-40 | 4/28/16 | ND | ND | ND | **0.0024** | ND | ND |
| **SB-9** | 5 | SB-9-5 | 4/28/16 | ND | **0.0040** | **0.0021** | ND | **0.0064** | ND |
| | 10 | SB-9-10 | | ND | **0.0098** | **0.0067** | **0.0030** | **0.0052** | ND |
| **SB-10** | 15 | SB-10-15 | 4/29/16 | **0.29** | ND | ND | ND | **0.0052** | ND |
| **USEPA RSL, Residential Soil** | | | | **61,000** | **1.2** | **4,900** | **1,110** | **0.94** | **--** |
| **USEPA RSL, Industrial Soil** | | | | **670,000** | **5.1** | **47,000** | **4,800** | **6.0** | **--** |
| **SFRWQCB ESL** | | | | **0.50** | **0.044** | **2.90** | **2.3** | **--** | **--** |
| **OEHHA, Residential Scenario** | | | | **--** | **--** | **--** | **--** | **--** | **--** |
| **OEHHA, Industrial Scenario** | | | | **--** | **--** | **--** | **--** | **--** | **--** |

## Table 3 TPH

| Sample Number | Sample Date | EPA 8015B(M) (mg/kg) | | | | | | | | | | | | | | | |
|---|---|---|---|---|---|---|---|---|---|---|---|---|---|---|---|---|---|
| | | C8-C10 | C10-C12 | C12-C14 | C14-C16 | C16-C18 | C18-C20 | C20-C22 | C22-C24 | C24-C26 | C26-C28 | C28-C32 | C32-C34 | C34-C36 | C36-C40 | C40-C44 | TPH (C6-C44) |
| SB-1-5 | 4/29/16 | <1.0 | <1.0 | <1.0 | <1.0 | **2.6** | **5.6** | **9.6** | **18** | **18** | **33** | **96** | **26** | **23** | **37** | **11** | **280** |
| SB-1-10 | | <10 | <10 | **36** | **170** | **310** | **440** | **620** | **800** | **1,000** | **1,200** | **2,500** | **640** | **280** | **440** | **270** | **8,700** |
| SB-2-20 | 4/29/16 | **2.7** | <1.0 | <1.0 | **1.1** | <1.0 | <1.0 | <1.0 | <1.0 | <1.0 | **1.8** | <1.0 | <1.0 | <1.0 | <1.0 | <1.0 | <10 |
| SB-3-35 | 4/28/16 | <1.0 | <1.0 | <1.0 | **3.2** | <1.0 | <1.0 | <1.0 | <1.0 | <1.0 | <1.0 | <1.0 | <1.0 | <1.0 | <1.0 | <1.0 | <10 |
| SB-3-40 | | <1.0 | <1.0 | <1.0 | **2.1** | <1.0 | <1.0 | <1.0 | <1.0 | <1.0 | <1.0 | <1.0 | <1.0 | <1.0 | <1.0 | <1.0 | <10 |
| SB-4-10 | 4/29/16 | <1.0 | <1.0 | <1.0 | <1.0 | <1.0 | <1.0 | <1.0 | <1.0 | <1.0 | <1.0 | **1.0** | <1.0 | <1.0 | <1.0 | <1.0 | <10 |
| SB-5-20 | 4/28/16 | <1.0 | <1.0 | <1.0 | **2.6** | <1.0 | <1.0 | <1.0 | <1.0 | <1.0 | **1.1** | **2.7** | **1.1** | <1.0 | **1.4** | <1.0 | **10** |
| SB-6-10 | 4/27/16 | <1.0 | <1.0 | <1.0 | <1.0 | <1.0 | <1.0 | **1.2** | **1.3** | **2.5** | **4.6** | **13** | **5.4** | **5.8** | **11** | **7.2** | **53** |
| SB-6-35 | | <1.0 | **1.2** | <1.0 | **2.9** | <1.0 | <1.0 | <1.0 | <1.0 | <1.0 | **1.5** | <1.0 | <1.0 | <1.0 | <1.0 | <1.0 | <10 |
| SB-7-10 | 4/2716 | <1.0 | **1.1** | <1.0 | **4.4** | <1.0 | <1.0 | <1.0 | <1.0 | **1.0** | <1.0 | **1.0** | <1.0 | <1.0 | <1.0 | <1.0 | <10 |
| SB-7-15 | | <1.0 | <1.0 | <1.0 | **2.1** | **3.8** | **6.2** | **13** | **14** | **18** | **20** | **39** | **16** | **14** | **21** | **12** | **180** |
| SB-8-20 | 4/27/16 | <1.0 | <1.0 | <1.0 | **1.9** | **1.7** | <1.0 | <1.0 | <1.0 | <1.0 | <1.0 | **1.4** | <1.0 | <1.0 | <1.0 | <1.0 | <10 |
| SB-8-25 | | <100 | **220** | **680** | **1,200** | **1,200** | **1,300** | **2,200** | **2,500** | **2,600** | **3,100** | **5,400** | **2,100** | **1,500** | **1,800** | **1,000** | **27,000** |
| SB-9-5 | 4/28/16 | <1.0 | **1.4** | <1.0 | <1.0 | <1.0 | <1.0 | <1.0 | <1.0 | **1.0** | **2.3** | **5.0** | **3.1** | **2.1** | **5.4** | <1.0 | **20** |
| SB-10-10 | 4/29/16 | <5.0 | <5.0 | <5.0 | <5.0 | <5.0 | **13** | **24** | **49** | **62** | **80** | **200** | **76** | **40** | **48** | **20** | **610** |
| SB-10-15 | | **1.6** | **1.3** | **3.0** | <1.0 | <1.0 | <1.0 | <1.0 | <1.0 | <1.0 | <1.0 | <1.0 | <1.0 | <1.0 | <1.0 | <1.0 | <10 |
| SB-11-5 | 4/28/16 | <1.0 | <1.0 | <1.0 | <1.0 | <1.0 | <1.0 | <1.0 | <1.0 | <1.0 | **1.2** | **3.3** | **1.5** | **1.0** | **2.9** | <1.0 | <10 |
| SB-11-35 | | <1.0 | <1.0 | **1.2** | **2.1** | <1.0 | <1.0 | <1.0 | <1.0 | <1.0 | **2.3** | **1.2** | <1.0 | <1.0 | <1.0 | <1.0 | <10 |
| SB-12-20 | 4/27/16 | <1.0 | <1.0 | <1.0 | <1.0 | <1.0 | <1.0 | <1.0 | <1.0 | <1.0 | **1.1** | <1.0 | <1.0 | <1.0 | <1.0 | <1.0 | <10 |
| SB-12-40 | | <1.0 | <1.0 | <1.0 | <1.0 | <1.0 | <1.0 | <1.0 | <1.0 | <1.0 | **3.3** | **1.8** | <1.0 | <1.0 | <1.0 | <1.0 | <10 |
| SB-13-5 | 4/29/16 | **1.0** | <1.0 | <1.0 | <1.0 | <1.0 | <1.0 | <1.0 | <1.0 | <1.0 | <1.0 | <1.0 | <1.0 | <1.0 | <1.0 | <1.0 | <10 |
| SB-13-15 | | <1.0 | <1.0 | <1.0 | **1.4** | <1.0 | <1.0 | <1.0 | <1.0 | <1.0 | <1.0 | <1.0 | <1.0 | <1.0 | <1.0 | <1.0 | <10 |

## Table 4 CAM Metals

| Sample Number | Sample Date | 6010B (mg/kg) | | | | | | | | | | 7471A (mg/kg) |
|---|---|---|---|---|---|---|---|---|---|---|---|---|
| | | Arsenic | Barium | Cadmium | Chromium | Cobalt | Copper | Lead | Nickel | Vanadium | Zinc | Mercury |
| SB-1-1 | 4/29/16 | 1.4 | 90 | <1.0 | 12 | 11 | 30 | 25 | 12 | 37 | 200 | 0.110 |
| SB-2-1 | 4/29/16 | 1.2 | 48 | <1.0 | 11 | 13 | 4.2 | <3.0 | 7.1 | 68 | 90 | 0.020 |
| SB-3-1 | 4/28/16 | 11 | 190 | <1.0 | 25 | 15 | 36 | 9.8 | 20 | 69 | 94 | 0.021 |
| SB-4-1 | 4/29/16 | 0.60 | 180 | <1.0 | 10 | 13 | 19 | 4.0 | 7.6 | 60 | 77 | 0.021 |
| SB-5-1 | 4/28/16 | 2.3 | 130 | <1.0 | 13 | 9.8 | 16 | 9.2 | 8.6 | 48 | 83 | 0.083 |
| SB-6-1 | 4/27/16 | 4.4 | 110 | 3.8 | 15 | 8.2 | 41 | 220 | 9.2 | 43 | 290 | 0.310 |
| SB-7-1 | 4/27/16 | 2.5 | 140 | <1.0 | 30 | 11 | 29 | 49 | 13 | 53 | 170 | 0.080 |
| SB-8-1 | 4/27/16 | 6.3 | 130 | <1.0 | 22 | 9.8 | 27 | 27 | 26 | 51 | 120 | 0.083 |
| SB-9-1 | 4/28/16 | 1.8 | 97 | <1.0 | 11 | 7.8 | 13 | 7.5 | 7.6 | 38 | 56 | 0.063 |
| SB-10-1 | 4/29/16 | 3.6 | 140 | <1.0 | 16 | 13 | 18 | 7.1 | 12 | 58 | 91 | 0.086 |
| SB-11-1 | 4/28/16 | 3.0 | 110 | <1.0 | 13 | 10 | 17 | 11 | 9.9 | 49 | 76 | 0.088 |
| SB-12-1 | 4/26/16 | 3.0 | 230 | <1.0 | 12 | 8.8 | 68 | 170 | 17 | 42 | 260 | 0.120 |
| SB-13-1 | 4/29/16 | 1.5 | 96 | <1.0 | 9.3 | 6.6 | 18 | 56 | 6.6 | 35 | 130 | 0.080 |
| SB-14-1 | 4/26/16 | 3.6 | 130 | <1.0 | 15 | 11 | 21 | 6.3 | 10 | 57 | 72 | 0.120 |
| SB-15-1 | 4/26/16 | 1.6 | 98 | <1.0 | 11 | 8.0 | 12 | <3.0 | 6.9 | 44 | 53 | 0.078 |
| SB-16-1 | 4/26/16 | 1.8 | 80 | <1.0 | 9.4 | 7.2 | 11 | <3.0 | 6.3 | 37 | 62 | 0.042 |
| USEPA RSL, Residential Soil | | 0.68 | 15,000 | 71 | -- | 23 | 3,100 | 400 | 670 | 390 | 2,300 | 11 |
| USEPA RSL, Industrial Soil | | 3.0 | 220,000 | 980 | -- | 350 | 47,000 | 800 | 8,100 | 5,800 | 35,000 | 46 |
| **ESL - Residential Land Use** | | 0.67 | 3,000 | 39 | -- | 23 | 3,100 | 80 | 86 | 390 | 23,000 | 13 |
| **ESL - Industrial Land Use** | | 0.31 | 220,000 | 580 | -- | 350 | 47,000 | 320 | 11,000 | 5800 | 350,000 | 190 |
| **OEHHA, Residential Scenario** | | 0.07 | 5,200 | 1.7 | -- | 660 | 3,000 | 80 | -- | 530 | 23,000 | 18 |
| **OEHHA, Industrial Scenario** | | 0.24 | 63,000 | 7.5 | -- | 3,200 | 38,000 | 320 | -- | 6,700 | 100,000 | 180 |

# 4.0 POTENTIAL EXPOSURE PATHWAYS AND RECEPTORS

The current exposure pathways are inhalation via intrusion of vapor-phase contaminants into the construction areas (breathing space of workers) and dermal contact with soil during excavation activities. Groundwater is not expected to be encountered during the Grayson Repowering Project.

# 5.0 GENERAL PERMITTING AND NOTIFICATIONS

It is expected the contractor(s) will develop their own site-specific Health and Safety Plan, Stormwater Pollution Prevention Plan, and obtain all necessary permits and make the appropriate notifications as necessary to conduct the demolition, excavation, and construction activities. Standard dust control measures and Best Management Practices (BMPs) should be implemented to prevent construction-related dust being generated beyond the boundaries of the Project Site. Stantec recommends air monitoring for VOCs in the construction working areas on an as needed basis. Requirements for dust monitoring throughout the construction Project will be covered by GWP's selected General Contractor.

Contact information for the South Coast Air Quality Management District is provided below:

**Office Address & Contact Information:**

South Coast Air Quality Management District
21865 Copley Drive
Diamond Bar, CA 91675
Phone: (909) 396-2000

**Office Hours:**

Monday - Friday 8:00 am - 5:00 pm

## 5.1 NOTIFICATION PROCEDURE FOR ENCOUNTERING IMPACTED SOIL

Impacted soil may be encountered during planned demolition and removal of above- and below-ground equipment, as well as, during trenching, excavation, grading, and construction activities performed at the Site (arsenic and lead concentrations were detected above regional screening levels in soil samples collected at the Site during Stantec's 2016 investigations). However, in the event impacted soil is encountered, and deemed to be significant (estimated to potentially meet a reportable quantity), the GWP Project Management team should be notified immediately to discuss any requirement(s) to notify regulatory agencies, such as the City of Glendale Engineering Division and/or the South Coast Air Quality Management District (SCAQMD). Any impacted soil, if encountered, should be segregated from clean soil (soil with no odor or visible staining).

# 6.0 EXCAVATION PROTOCOL AND PROCEDURES

A designated work area boundary shall be established for grading, trenching, and excavation activities. If necessary during excavation, exposed contaminated soil surfaces will be kept visibly moist by water spray, covered with continuous heavy duty plastic sheeting or other covering to minimize emissions of VOCs to the atmosphere. Air and dust monitoring should be conducted at the worker breathing zone and the work area boundary. The designated work area boundary will be adjusted based on air monitoring results.

No entry into excavation pits/trenches will be allowed unless otherwise authorized and in accordance with the HASP and the Safe Work Practices confined space entry procedures as specified in an Entry Permit completed by the Field Team Leader. The Entry Permit will specify the confined space monitoring to be performed and the conditions for acceptable entry. Entry is defined as any part of a person's body passing through the plane of the opening of the excavation.

If warranted, during periods of inactivity (longer than 12 hours), trench bottoms and sidewalls may be covered with heavy-duty plastic sheeting or other covering to minimize emissions of VOCs to the atmosphere. Open excavations will be demarcated with barricades and caution tape during periods of inactivity and at the end of each workday to reduce the potential of personnel falling into the excavations. The excavations will be maintained to mitigate physical hazards to personnel working in or entering the area after work is completed. If a resulting excavation poses a physical hazard, the sidewalls will be sloped where possible to reduce the potential of someone falling into the excavation. Excavations will be graded/or backfilled with native top soil, to the extent possible, to mitigate physical hazards and to prevent ponding of water during rainfall. If native soil is not available, clean imported soil will be used. As a temporary measure, the excavation sidewalls will be sloped to reduce personnel trip and fall hazards during work in the area. Backfill materials, if imported, will be obtained from a location certified as clean. Coarse-grained soils with a minor quantity of fines to bind the soil are preferred for use as backfill as they are easier to compact and will allow water to drain more readily into surrounding soils. The excavation contractor will utilize compaction equipment suitable for use in the resulting excavations.

Parking areas, staging areas, and traffic pathways on the Site will be cleaned as necessary when soil material from the Site is visible. In addition, excavation activities will be suspended when the winds (instantaneous gusts) exceed 25 miles per hour within the boundaries of the Site.

# 7.0 MANAGEMENT OF POTENTIALLY IMPACTED EXCAVATED SOIL

Based on Stantec's 2016 Phase II assessment, which included the collection of soil samples and laboratory analytical screening for TPH, VOCs, and CAM Metals, other than elevated concentrations of lead and arsenic, impacted soils in excess of regulatory screening criteria are not anticipated (Section 3.2). Although not anticipated, in the event further impacted/oily/stained/odorous soil is encountered, it should be stockpiled and places on heavy duty plastic sheeting (Visqueen™ or equivalent) and covered appropriately to reduce dust and in the event of rain, minimize the potential for water-borne migration of impacted soil and debris. Characterization samples should be collected if addition areas of impacted/oily/stained/odorous soils are found/discovered during earth moving activities; otherwise samples collected and analyzed for constituents of concern during the 2016 Phase II assessment (Attachment B, Tables 1 through 3), may be utilized for the removal of these soils from the Site and disposal at a GWP-approved facility that is licensed to accept the waste soils generated (as either hazardous or non-hazardous).

Note that laboratory analysis is a requirement in order to generate a waste soil profile prior to transportation and disposal of any waste soils generated at the Site. Please refer to Section 7.3 for a more detailed breakdown of the typical analytical methods required. Additional analysis of soils may be required based on field observations and screening and the results of any laboratory analyses completed.

## 7.1 STOCKPILE AND/OR CONTAINERIZED SOIL CHARACTERIZATION

For the purpose of this SMP, "stockpiled soil" is soil that has been disturbed at the site via demolition and removal of aboveground and below ground equipment, trenching, excavation, grading, and construction activities. The disturbance of soil at the Site results in changes in the geologic structure and contaminant distribution patterns. Soil that is designated for disposal requires an appropriate level of characterization before it can be handled, transported, and removed from the Site for disposal.

Procedures in the Environmental Protection Agency (EPA) Publication SW-846 provide a method for determining the mean concentration of a given contaminant within a soil mass and the appropriate number of samples necessary to calculate this mean to within a specified confidence level.

The following presents an overview and guideline of the minimum number of discrete samples required for stockpile sampling:

- **Stockpiles <10 Cubic Yards** – A minimum of two soil samples will be collected, one from each half of the stockpile. Select sample points randomly within each half;

- **Stockpiles from 10-20 Cubic Yards** – A minimum of three soil samples will be collected, one from each third of the stockpile. Select sample points randomly within each third;
- **Stockpiles 20**-100 Cubic Yards – A minimum of four soil samples will be collected, one from each quarter of the stockpile. Select sample points randomly within each quarter; and/or
- **Stockpiles 100-500 Cubic Yards** – A minimum of one soil sample for each 25 cubic yards or portion thereof will be collected (e.g., a 130-cubic yard stockpile would require 6 soil samples). Section the stockpile into 25 cubic yard portions and obtain a minimum of one soil sample from each 25-cubic yard portion. Select sample points randomly within each 25-cubic yard portion of the stockpile.

Information on the stockpiled soil evaluation will include the following:

- Estimate of the volume of contaminated soil involved;
- Description of the contaminant (e.g., petroleum hydrocarbons, diesel fuel, VOCs, and/or metals) as determined using analytical data;
- Description of the sampling methodology and the sample location/selection process;
- Plot Plan and/or photographs detailing the stockpile and sample locations;
- Copy of all sampling results, chain-of-custody (COC) documentation, and quality assurance/quality control (QA/QC) supporting data; and
- Summary of laboratory test results in table format for the stockpile sampling completed.

Based on laboratory results recently available from the Site (April 26 through April 29, 2016), the following areas (Figure 5) are recommended for further investigation and classification prior to soil disposal.

### Table 5 Areas Recommended for Further Investigation and Classification Prior to Soil Disposal

| ID/Location | Dimensions (in feet) | Volume (in cubic feet) | Volume (in cubic yards) | Lead Concentration (in mg/kg) | Additional Laboratory Testing Required* |
|---|---|---|---|---|---|
| SB-6 | 50 x 50 x 2 | 5,000 | 185 | 220 | TCLP |
| SB-12 | 50 x 50 x 2 | 5,000 | 185 | 170 | TCLP |
| SB-13 | 50 x 50 x 2 | 5,000 | 185 | 56 | STLC |
| *lead concentration exceeding 50 mg/kg require additional analysis for waste classification. | | | | | |

Soil of these localized shallow excavations shall be stock piled, and sampling shall occur in accordance with procedures described in Section 7.1 to safely classify and subsequently dispose of soil. Should deeper excavation/grading be required in these areas, additional soil samples shall be collected and analyzed for CAM metals. Excavated soils shall be stockpiles pending receipt and evaluation of analytical results and classification of the material.

## 7.2 SOIL MANAGEMENT FOR POTENTIALLY IMPACTED SOIL

The SMP will enable Project Management and field personnel to make effective decisions by efficiently managing excavated soils.

Soil management is dependent upon the concentrations of constituents of concern detected in soil, as well as regulatory criteria set forth by the applicable regulatory agencies (California Department of Health Services [DHS] and RWQCB).

Options for the handling of excavated soil include the following:

1. On-site reuse (must be pre-approved by environmental consultant);
2. Off-site recycling and/or disposal at a Class II and III Waste Management Facility (Azusa Land Reclamation Management Facility); or
3. Disposal at a Class I Hazardous Waste Facility (Clean Harbors Facility).

Work areas shall be surveyed by a qualified contractor/consultant, prior to the beginning of each working day and routinely throughout each day that grading, trenching, and/or excavation activities occur, to check for the presence of potentially impacted soil and contaminant sources. Equipment operators, management, and other field personnel should be notified of any impacted soil and/or contaminant sources. Locations identified as such will be clearly marked with paint, delineators and/or flagging, etc.

Impacted soils can often be identified in the field by the following:

- Petroleum hydrocarbon, or other odor(s);
- Discoloration/staining of soil compared with adjoining surrounding soils; and/or
- Field screening with an organic vapor analyzer (OVA), such as a photoionization detector (PID) or other field equipment.

In the event suspected impacted soil is identified, the presence of contaminants should be verified by following the procedures set forth in the five steps below.

### 7.2.1 Step One

Immediately stop operations in the vicinity of the suspected impacted soil, and notify the Field Team Leader.

### 7.2.2 Step Two

Using appropriate PPE (as specified in the site-specific HASP), collect soil sample(s) with a clean hand-auger or stainless steel trowel and place a portion of the soil into a sealable plastic Zip-

loc™ bag for screening with a PID. Sample the remaining soil, by the use of En-Core Samplers (3 per sample for VOCs). Note that the number of samples required to be collected and analyzed for stockpiled soil characterization is presented in Section 7.1.

### 7.2.3 Step Three

Place all samples collected into sealed Zip-loc™ bags and place in a chilled cooler maintained at approximately 4°C prior to analysis. Samples shall be shipped under proper Chain of Custody (COC) protocol to a California State certified analytical laboratory (laboratory to be determined). Expedited analytical services may be requested to the Field Team Leader, if Project delays are anticipated.

### 7.2.4 Step Four

Site management and field personnel should use their best judgment as to whether additional sampling should be completed to evaluate the extent of the impacted soil(s) identified. The purpose of the sampling and understanding of the extent of impacted soil is to ensure that solids are removed from the Site that could present a risk to human health during construction and after redevelopment of the Site.

### 7.2.5 Step Five

Upon receipt of the analytical test results, compare any detected constituents with the regulatory and site specific criteria presented in Attachment B, Tables 1 through 3. Note that additional laboratory analytical testing [i.e., Bioassays, Soluble Threshold Limit Concentration (STLC) and/or Toxicity Characteristic Leaching Procedure (TCLP)] may be required to evaluate whether the soil can be handled as a non-hazardous waste versus a hazardous waste.

Please refer to the flow diagram that provides a visual decision making process for the proper characterization of soils for disposal (Appendix C).

## 7.3 SAMPLING METHODS

- VOCs by EPA Test Method 8260B;
- TPH (characterized as carbon chain) by EPA Test Method 8015M; and
- CAM Metals by EPA Test Method 6010B.

Note that all confirmation and stockpile soil samples collected during the excavation/trenching and disposal activities will be relinquished to a State of California Certified Laboratory for chemical analysis (laboratory to be determined).

Other potential constituents of concern not listed above will be analyzed for, as warranted, and based on field observations and screening.

A waste profile and manifests will be generated for transportation and disposal of the wastes. Copies of all waste manifests shall be provided to the local GWP EH&S Manager, Mr. John Escudero. Soil loaded into transport vehicles for off-Site disposal will be covered with continuous heavy duty plastic or other covering to minimize emissions to the atmosphere. This covering will be in good condition, joined at the seams, and securely anchored to minimize headspace where vapors may accumulate.

## 7.4 SOIL DISPOSAL

Subject to approval by GWP, the anticipated landfill facilities for disposal of solid wastes generated to the Site are as follows:

| Solid Waste Type | Designated Licensed Disposal Facility Location |
|---|---|
| **Non-hazardous Soil**<br><br>(Class II, III landfill and recycling facilities) | **Azusa Land Reclamation (Solids Disposal, Class II & III)**<br>1211 W. Gladstone<br>Azusa, CA 91702<br>Phone: (800) 963-4776<br><br>**Scholl Canyon Landfill**<br>3001 School Canyon Road<br>Glendale, CA 91206<br>Phone: (818) 243-9779 |
| **Hazardous Soil**<br><br>(Class I landfill) | **Clean Harbors Facility (Solids Disposal, Class I & II & III)**<br>1737 East Denni Street<br>Wilmington, CA 90744<br>Phone: (310) 835-9998 |

# 8.0 AIR QUALITY MANAGEMENT PLAN

During site operations, the environmental compliance field supervisor (or delegate) shall monitor ambient air for VOCs and odors; in addition, GWP's General Contractor will monitor dust at the Site during excavation and earth moving activities. Odor and VOC control measures shall be implemented during ground disturbance, earth moving activities, and loading of soil to mitigate the potential release of malodorous compounds and air-borne particulates as required under *Rule 1166, as amended May 11, 2001, SCAQMD*. Dust control during all phases of the project will be monitored by GWP's General Contractor.

The following approach was developed based on methods used successfully at a site with similar characteristics. This plan also presents contingency measures to contain and control the source of odors and dust, as needed.

Several project activities have the potential to create air emissions:

- Loading haul truck – Loading of the trucks with material from the Site has the potential to generate dust, constituents of concern, and odors from the disturbed material;
- Vehicular traffic – Movement of construction equipment, dump trucks, and other vehicles around the Property and in parking areas could produce fugitive dust and vehicle exhaust emissions; and
- Property reclamation – Grading backfilling, and other earthwork activities can produce fugitive dust and exhaust emissions.

To control the release of odors and dust, loading of the waste shall be completed in a deliberate and controlled manner, whereby a limited quantity of waste shall be exposed at a given time. The slow rate of material excavation and the limited area of exposed material will reduce the potential for adverse odors and release of air-borne particulates.

General odor and dust control methods consist of the following:

- Excavation activities shall be conducted in a slow and controlled fashion, allowing site personnel to effectively apply odor-mitigating compounds or employ administrative or engineering controls to control odor and/or dust;
- The spatial extent of excavation/trenching shall be controlled to minimize the surface area of exposed waste;
- Excavation sheeting shall be used over exposed waste to minimize fugitive emissions;
- A decontamination station shall be deployed on Site to clean vehicles of waste and excavation debris;

- Sweep all paved access routes, parking areas, work areas, and staging areas, as needed;
- Air quality conditions at the point of excavation shall be monitored in real-time during site operations;
- Air quality action levels shall be used as triggers for administering controls on emissions. However, olfactory detections of malodorous compounds by site personnel shall also trigger the application of odor control compounds or administration of other controls; and
- If odor emissions remain above action levels or in nuisance odors persist outside of the project boundary, then the work shall be stopped and exposed waste shall be covered to identify conditions which may be contributing to the elevated emissions. The work shall remain stopped until the condition that has produced the elevated emission level is identified, an appropriate mitigation method identified and implemented, and all instrumentation and/or olfactory input indicate that odors are reduced to an acceptable level.

# 9.0 MANAGEMENT OF DEMOLITION AND CONSTRUCTION WASTE

This SMP provides an overview of waste streams that will likely be generated during the excavation, grading, and construction activities and description of measures and BMPs for the planned management of these waste streams. Copies of California Stormwater Quality Association (CASQA) BMPs are included in Appendix D.

The selected demolition contractor will provide a qualified contractor/consultant to coordinate with the waste contractor(s) to properly manage construction related wastes, as well as impacted soil, and any other wastes that may be generated and identified as either non-hazardous, or hazardous. The wastes that are anticipated to be generated are described below.

## 9.1 NON-HAZARDOUS WASTES

Solid non-hazardous wastes generated as a result of demolition and removal of above- and below-ground equipment, as well as, trenching, excavation, grading, and construction activities will likely include construction debris, scrap metal, glass, wood, plastic and other general trash such as paper, cardboard and plastic containers. Management of these wastes shall be the responsibility of the general contractor(s). Management of these waste streams includes segregation and recycling where possible, proper storage of wastes to prevent wind dispersion, and routine haul-out or pick-up and disposal of wastes licensed to be sent to an approved Class III landfill or recycling facility.

It is possible that soil impacted with VOCs, TPH, and potentially heavy metals (mainly lead to arsenic) may be encountered at the Site and generated as waste streams. Based on prior investigations completed at the Site to date, approximately 80 percent of soils excavated and stockpiled are likely to be classified as non-hazardous wastes.

## 9.2 HAZARDOUS WASTES

During Stantec's Phase II Investigation, three shallow soil samples (SB-6, SB-12, and SB-13) collected from the center of the Site contained lead concentrations above 50 mg/kg. Lead concentrations exceeding 50 mg/kg require additional laboratory testing to determine leachability of the metal into the subsurface. The results of Soluble Threshold Limit Concentration (STLC) and Toxicity Characteristic Leaching Procedure (TCLP) will determine the classification of these soils.

For each of these three locations, localized shallow excavation (approximately a 50' by 50' area to a depth of 2 feet bgs, after removal of asphalt cover) of these areas, stock piling, and soil

sampling in accordance with procedures described in Section 7.1 are recommended to safely classify and subsequently dispose of soil.

Should deeper excavation/grading be required in the areas near SB-6, SB-12, and SB-13, additional samples shall be collected and analyzed for CAM Metals, as previous investigations only assessed shallow CAM Metal concentrations. Excavated soil shall be stockpiled until analytical results are received and material has been classified for removal.

Other CAM Metal concentrations encountered during Stantec's Phase II Investigation were below hazardous classification limit; higher metal concentrations may be detected in other areas of the Site.

# 10.0 BEST MANAGEMENT PRACTICES

Excavation and grading BMPs are management practices, operating procedures, or schedules of activities to control, reduce, or prevent discharge of pollutants from demolition and grading activities. Daily site inspections should be performed to ensure the Site is in compliance, and such that corrective action can be completed immediately and in a timely manner. In addition to the BMPs briefly outlined below, Appendix C includes copies of BMPs recommended for construction projects published by CASQA. Pertinent BMPs (excluding stormwater management BMPs covered under the site-specific SWPPP) prepared for the project Site include the following:

## 10.1 WASTE MANAGEMENT & MATERIALS POLLUTION CONTROL BMPS

- WM-1 – Material Delivery and Storage;
- WM-2 – Material Use;
- WM-3 – Stockpile Management;
- WM-4 – Spill Prevention and Control;
- WM-5 – Solid Waste Management;
- WM-6 – Hazardous Waste Management;
- WM-7 – Contaminated Soil Management;
- WM-8 – Concrete Waste Management;
- WM-9 – Sanitary/Septic Waste Management; and
- WM-10 – Liquid Waste Management.

## 10.2 NON-STORMWATER MANAGEMENT BMPS

- NS-1 – Water Conservation Practices;
- NS-2 – Dewatering Operations;
- NS-8 – Vehicle & Equipment Cleaning;
- NS-9 – Vehicle & Equipment Fueling; and
- NS-10 – Vehicle & Equipment Maintenance.

In brief, some key notes and areas to better ensure compliance include the following (with respect to the excavation of soil, removal of concrete and debris handling activities):

### 10.2.1 General

- Storage areas will be neat and orderly to facilitate inspection;
- Checks will be conducted on all equipment for leaks. Any leaking equipment identified during the completion of these checks will be repaired immediately;
- Major maintenance, repairs and washing of equipment will be conducted away from any excavation area;
- Refueling and/or maintenance work will be performed in a designated area away from storm drains;
- Spills and leaks will be contained and cleaned up immediately using appropriate measures (absorbent materials/rags etc.);
- Dry sweep dirt from paved surfaces for general cleanup; and
- Train employees and increase awareness in using the BMPs.

### 10.2.2 Concrete Breakout

- Avoid creating excess dust when breaking concrete. Prevent dust from entering waterways;
- Protect storm drains using earth dikes, straw bales, sand bags, absorbent socks, and/or other controls to divert or trap filter runoff (refer to SWPPP);
- Shovel or vacuum saw-cut slurry and remove from the Site; and
- Remove contaminated broken pavement from the Site promptly. Do not allow rainfall or other runoff to come into contact with contaminated broken concrete.

### 10.2.3 Excavation

- Schedule excavation work for dry weather periods when possible;
- Protect storm drains using earth dikes, straw bales, sand bags, absorbent socks, and or other controls to divert or trap filter runoff (refer to SWPPP);
- Avoid over-application of water for dust control; and
- Cover stockpiles and other construction materials with heavy duty plastic sheeting. Protect from rainfall and prevent runoff with temporary roofs or heavy duty plastic and berms.

Adherence to the BMPs and summary points presented above will assist in compliance with local and state requirements for eliminating and/or reducing the discharge of pollutants from the Site to waters of the state.

# 11.0 KEY CONTACT INFORMATION

**The following presents key contact information for this Project:**

| | |
|---|---|
| Property Owner:<br>Address:<br><br>Key Individual Contact:<br><br>Office: | **City of Glendale**<br>141 North Glendale Avenue<br>Glendale, CA<br>Mr. Steve Zurn, General Manager<br>Glendale Water and Power<br>(818) 548-2107 |
| General Contractor:<br>Address:<br><br>Key Individual Contacts:<br>Mobile: | **TBD**<br><br><br>TBD |
| Environmental Consultants:<br>Address:<br><br>Key Individual Contact:<br>Office:<br>Cell: | **Stantec Consulting Services Inc.**<br>290 Conejo Ridge Avenue<br>Thousand Oaks, CA 91361<br>Mr. Michael Weber<br>(805) 719-9329<br>(805) 477-8580 |
| **South Coast Air Quality Management District:**<br>Address:<br><br>Contact No. | <br><br>21865 Copley Drive<br>Diamond Bar, CA 91765<br>(909) 396-2000 |
| **Analytical Laboratory:**<br>Address:<br>Key Individual Contact:<br>Contact No. | **TBD**<br><br>TBD |

# 12.0 CLOSING

We declare that, to the best of our professional knowledge and belief, we meet the definition of Environmental Professional as defined in 40 CFR 312.10. We have the specific qualifications based on education, training, and experience to implement the SMP developed for this construction project.

Prepared by _____
(signature)
**Kai Pavel, PG**

Reviewed by _____
(signature)
**StephAnnie Roberts, Sr. Project Manager**

All information and recommendations provided by Stantec in this document regarding the SMP prepared for the Site located at 800 Air Way, Glendale, California 91201, has been prepared under the supervision of, and reviewed by the licensed professional whose signature appears below.

Licensed Approver _____ Stamp:
(signature) (February 28, 2017)
**Steven C. Brady, C.E.G., C.HG.**

PROFESSIONAL GEOLOGIST
STEVEN C. BRADY
No. 6031
STATE OF CALIFORNIA

# 13.0 REFERENCES

Stantec Consulting Services Inc., Phase I Environmental Site Assessment, Grayson Power Plant, 800 Air Way, Glendale, California 91201. July 14, 2016.

Stantec Consulting Services Inc., DRAFT Phase II Environmental Site Assessment Report, Grayson Power Plant, 800 Air Way, Glendale, California 91201. July 8, 2016.

http://GeoTracker.swrcb.ca.gov

http://glendaleca.gov/home

http://graysonrepowering.com

http://www.cleanharbors.com

https://www.epa.gov/hw-sw846/sw-846-compendium

http://maps.assessor.lacounty.gov

# FIGURES

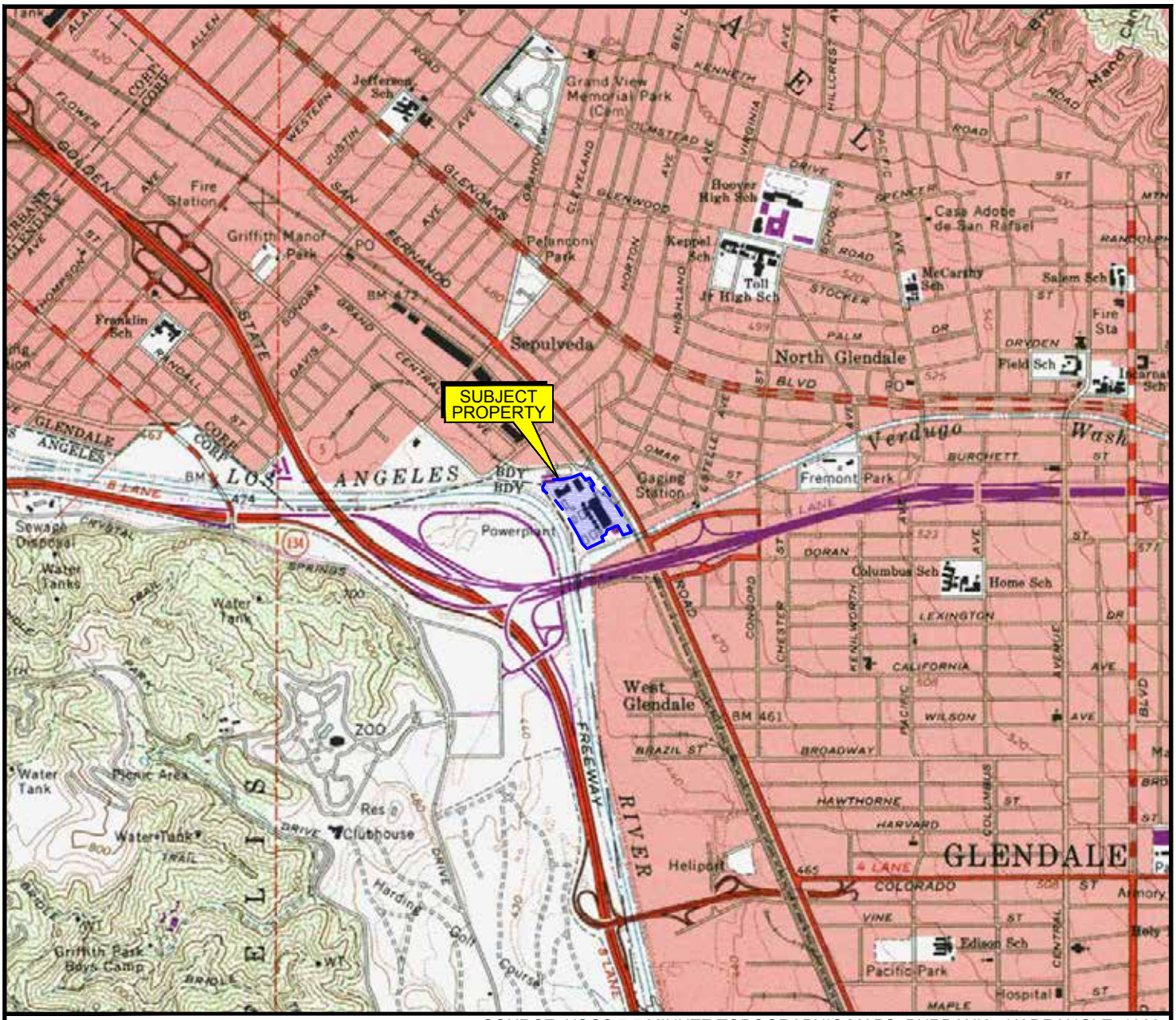


SOURCE: USGS 7.5 MINUTE TOPOGRAPHIC MAPS, BURBANK QUADRANGLE, 1966
PHOTOREVISED, 1994

N

0 2000 4000

APPROXIMATE SCALE (FEET)

Stantec
290 Conejo Ridge Avenue
Thousand Oaks, CA 91361
PHONE: (805) 230-1266 FAX: (805) 230-1277

| FOR: | | | FIGURE: |
|---|---|---|---|
| Grayson Power Plant<br>Phase 1 ESA<br>800 Air Way<br>Signal Hill, CA 90755 | | SITE LOCATION MAP | 1 |
| JOB NUMBER: 2057123300.M800-5G | DRAWN BY: R. Roman | CHECKED BY: A. Sawant | APPROVED BY: C. Haase | DATE: 02/16/17 |

FILEPATH:E:\2057\active\2057123300\05_report\deliv\cad\figures\20151217_pho_gpp_esa.dwg TRoman Dec 18, 2015 at 11:08 Layout: F1

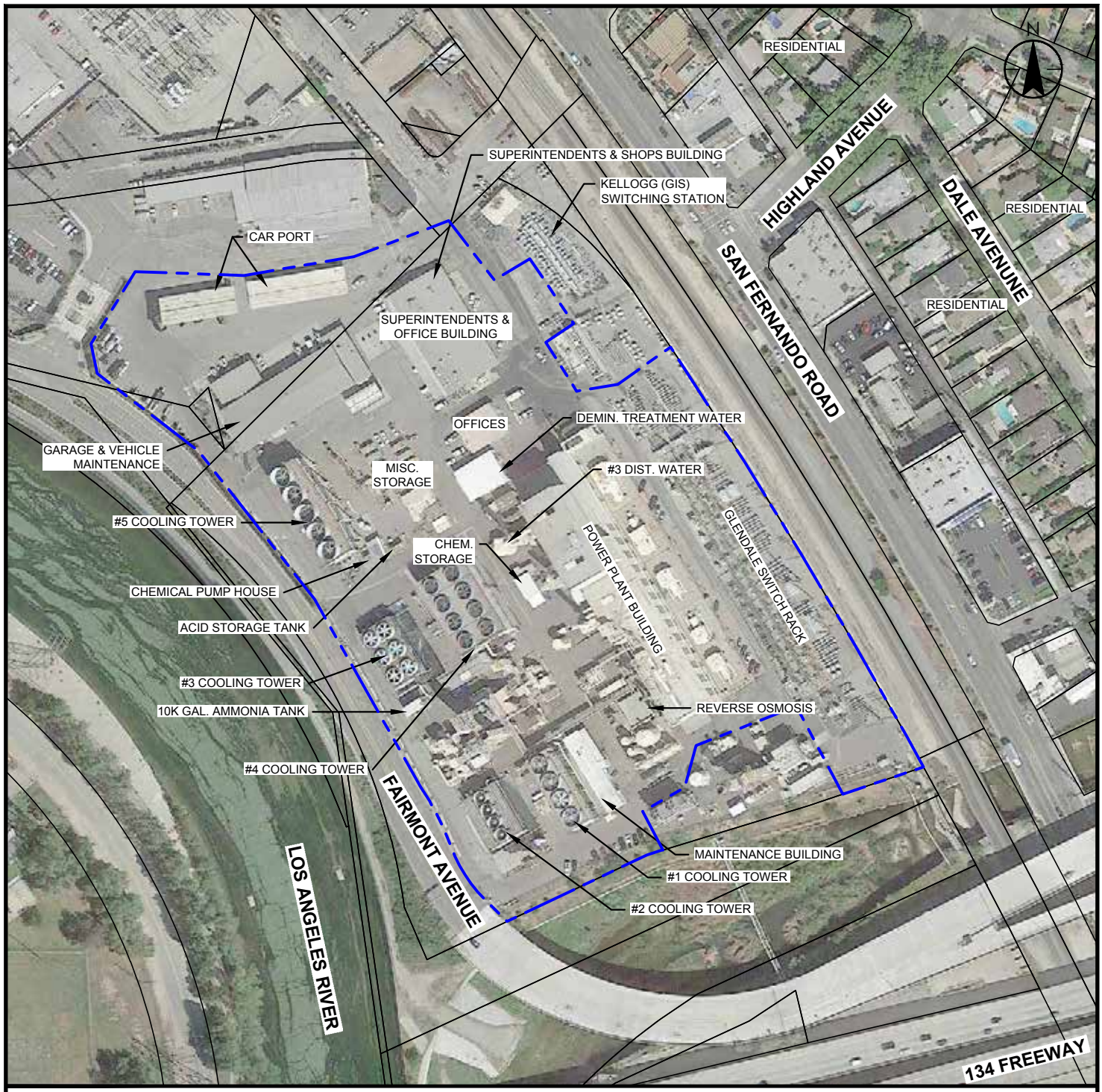


## LEGEND

APPROXIMATE SUBJECT PROPERTY LINE

## NOTES:

1. MAP REFERENCES; GOOGLE EARTH PRO AERIAL IMAGE, DATED APRIL 23, 2014. GLENDALE WATER AND POWER, FACILITIES SITE PLAN, SHEET NO. 1, 6095-A, DATED SEPTEMBER 11, 2008.
2. COORDINATE SYSTEM; NAD 83 CALIFORNIA STATE PLANES, ZONE 5 (FT.). NOT A SURVEYED MAP, SITE FEATURES AND LOCATIONS ARE APPROXIMATE.

0 200 400

APPROXIMATE SCALE (FEET)

Stantec
290 Conejo Ridge Avenue
Thousand Oaks, CA 91361
PHONE: (805) 230-1266 FAX: (805) 230-1277

FOR:
Grayson Power Plant
Phase 1 ESA
800 Air Way
Signal Hill, CA 90755

SITE VICINICTY MAP

FIGURE: 2

| JOB NUMBER: | DRAWN BY: | CHECKED BY: | APPROVED BY: | DATE: |
|---|---|---|---|---|
| 2057123300.M800-5G | R. Roman | A. Sawant | C. Haase | 02/16/17 |

FILEPATH:E:\2057\active\2057123300\05_report\deliv\cad\figures\20151217_pho_gpp_esa.dwg TRoman Dec 18, 2015 at 11:10 Layout: F2

## LEGEND

- APPROXIMATE SUBJECT PROPERTY LINE
- SOIL SAMPLING LOCATIONS ONLY
- EXISTING GROUNDWATER MONITORING WELLS
- SOIL VAPOR SAMPLING SOIL BORING LOCATIONS
- GROUNDWATER SAMPLING SOIL BORING LOCATIONS
- SOIL, GROUNDWATER AND SOIL VAPOR SAMPLING SOIL BORING LOCATION

| | |
|---|---|
| VOCs | VOLATILE ORGANIC COMPOUNDS |
| DEPTHS | FEET BELOW GROUND SURFACE |
| X | m,p-XYLENES |
| B | BENZENE |
| T | TOLUENE |
| TCE | TRICHLOROETHENE |
| ND | CONSTITUENTS NOT DETECTED AT OR ABOVE THEIR RESPECTIVE LABORATORY REPORTING LIMITS |

ALL RESULTS ARE IN MILLIGRAMS PER KILOGRAM (mg/kg)

## NOTES:

1. MAP REFERENCES; GOOGLE EARTH PRO AERIAL IMAGE, DATED APRIL 23, 2014. GLENDALE WATER AND POWER, FACILITIES SITE PLAN, SHEET NO. 1, 6095-A, DATED SEPTEMBER 11, 2008.
2. COORDINATE SYSTEM; NAD 83 CALIFORNIA STATE PLANES, ZONE 5 (FT.). NOT A SURVEYED MAP, SITE FEATURES AND LOCATIONS ARE APPROXIMATE.

N

0 150 300

APPROXIMATE SCALE IN FEET

No warranty is made by Stantec Consulting Services Inc. as to the accuracy, reliability, or completeness of these data. Original data were compiled from various sources. This information may not meet National Map Accuracy Standards. This product was developed electronically, and may be updated without notification. Any reproduction may result in a loss of scale and or information.

Stantec
290 Conejo Ridge Avenue
Thousand Oaks, CA 91361
PHONE:(805) 230-1266 FAX:(805) 230-1277

FOR:
GRAYSON POWER PLANT
PHASE II ESA
800 AIR WAY
GLENDALE, CALIFORNIA 91201

**SITE MAP WITH SOIL VOCs CONCENTRATIONS**

FIGURE: **3**

| JOB NUMBER: | DRAWN BY: | CHECKED BY: | APPROVED BY: | DATE: |
|---|---|---|---|---|
| 2057123300 | STA | AS | TRS | 02/16/17 |

FILEPATH:C:\Users\asawant\Desktop\Grayson Power Plant\CADD\FIG 3_GRAYSON POWER PLANT_VOCs CONCENTRATION IN SOIL.dwg | Layout Tab: 11x17L | Drafter: asawant | Jun 21, 2016 at 8:57

## LEGEND

- APPROXIMATE SUBJECT PROPERTY LINE
- SOIL SAMPLING LOCATIONS ONLY
- EXISTING GROUNDWATER MONITORING WELLS
- SOIL VAPOR SAMPLING SOIL BORING LOCATIONS
- GROUNDWATER SAMPLING SOIL BORING LOCATIONS
- SOIL, GROUNDWATER AND SOIL VAPOR SAMPLING SOIL BORING LOCATION
- TPH — TOTAL PETROLEUM HYDROCARBONS
- DEPTHS — FEET BELOW GROUND SURFACE
- CONSTITUENTS NOT DETECTED AT OR ABOVE THEIR RESPECTIVE LABORATORY REPORTING LIMITS

ALL RESULTS ARE IN MILLIGRAMS PER KILOGRAM (mg/kg)

## NOTES:

1. MAP REFERENCES; GOOGLE EARTH PRO AERIAL IMAGE, DATED APRIL 23, 2014. GLENDALE WATER AND POWER, FACILITIES SITE PLAN, SHEET NO. 1, 6095-A, DATED SEPTEMBER 11, 2008.
2. COORDINATE SYSTEM; NAD 83 CALIFORNIA STATE PLANES, ZONE 5 (FT.). NOT A SURVEYED MAP, SITE FEATURES AND LOCATIONS ARE APPROXIMATE.

No warranty is made by Stantec Consulting Services Inc. as to the accuracy, reliability, or completeness of these data. Original data were compiled from various sources. This information may not meet National Map Accuracy Standards. This product was developed electronically, and may be updated without notification. Any reproduction may result in a loss of scale and or information.

N

0 150 300

APPROXIMATE SCALE IN FEET

Stantec
290 Conejo Ridge Avenue
Thousand Oaks, CA 91361
PHONE:(805) 230-1266 FAX:(805) 230-1277

FOR:
GRAYSON POWER PLANT
PHASE II ESA
800 AIR WAY
GLENDALE, CALIFORNIA 91201

**SITE MAP WITH SOIL TPH CONCENTRATIONS**

FIGURE: **4**

| JOB NUMBER: | DRAWN BY: | CHECKED BY: | APPROVED BY: | DATE: |
|---|---|---|---|---|
| 2057123300 | STA | AS | TRS | 02/16/17 |

FILEPATH:C:\Users\asawant\Desktop\Grayson Power Plant\CADD\FIG 4_GRAYSON POWER PLANT_TPH CONCENTRATION IN SOIL.dwg | Layout Tab: 11x17L | Drafter: asawant | Jun 21, 2016 at 8:27

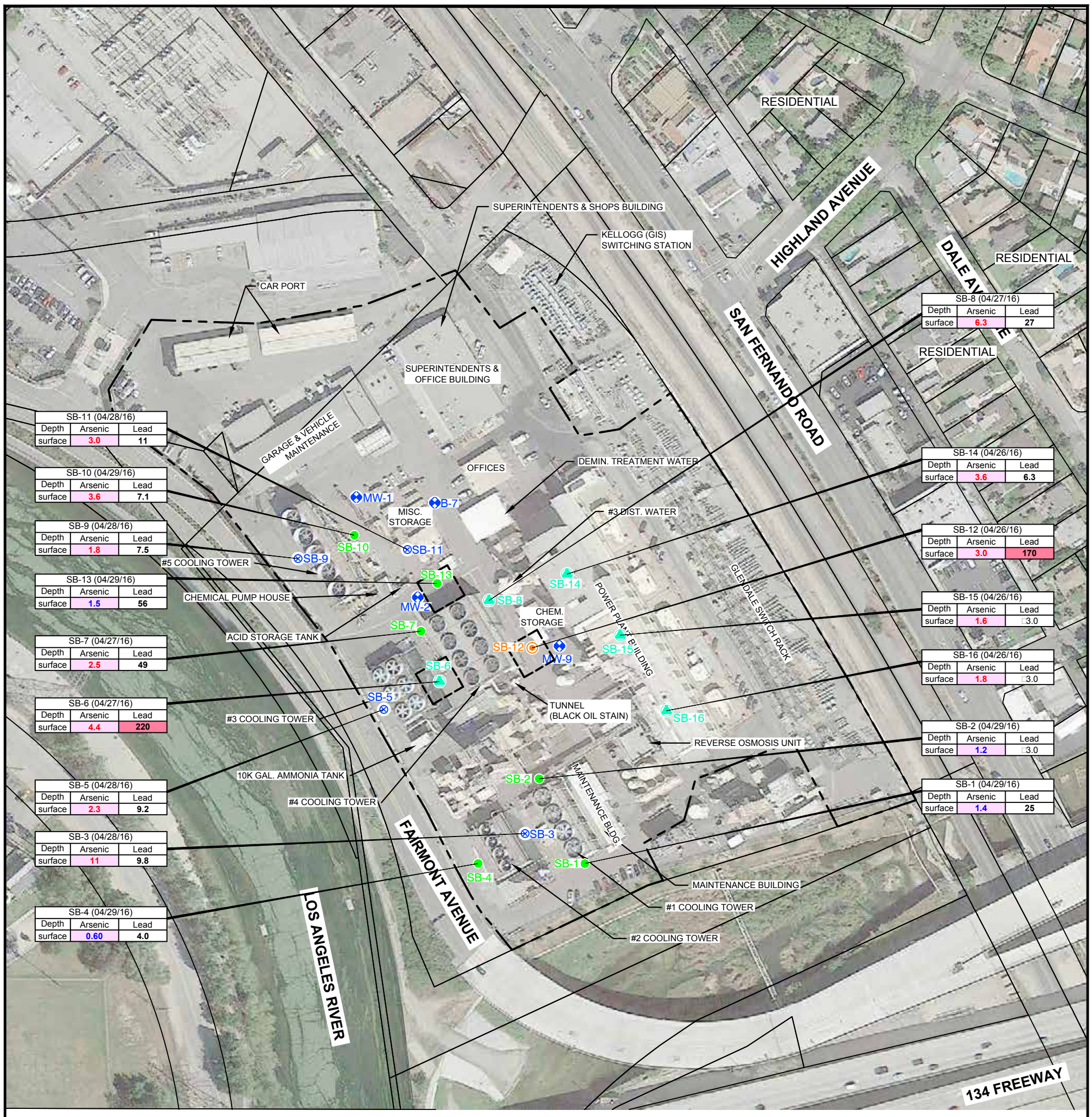


| SB-11 (04/28/16) | | |
|---|---|---|
| Depth | Arsenic | Lead |
| surface | 3.0 | 11 |

| SB-10 (04/29/16) | | |
|---|---|---|
| Depth | Arsenic | Lead |
| surface | 3.6 | 7.1 |

| SB-9 (04/28/16) | | |
|---|---|---|
| Depth | Arsenic | Lead |
| surface | 1.8 | 7.5 |

| SB-13 (04/29/16) | | |
|---|---|---|
| Depth | Arsenic | Lead |
| surface | 1.5 | 56 |

| SB-7 (04/27/16) | | |
|---|---|---|
| Depth | Arsenic | Lead |
| surface | 2.5 | 49 |

| SB-6 (04/27/16) | | |
|---|---|---|
| Depth | Arsenic | Lead |
| surface | 4.4 | 220 |

| SB-5 (04/28/16) | | |
|---|---|---|
| Depth | Arsenic | Lead |
| surface | 2.3 | 9.2 |

| SB-3 (04/28/16) | | |
|---|---|---|
| Depth | Arsenic | Lead |
| surface | 11 | 9.8 |

| SB-4 (04/29/16) | | |
|---|---|---|
| Depth | Arsenic | Lead |
| surface | 0.60 | 4.0 |

| SB-8 (04/27/16) | | |
|---|---|---|
| Depth | Arsenic | Lead |
| surface | 6.3 | 27 |

| SB-14 (04/26/16) | | |
|---|---|---|
| Depth | Arsenic | Lead |
| surface | 3.6 | 6.3 |

| SB-12 (04/26/16) | | |
|---|---|---|
| Depth | Arsenic | Lead |
| surface | 3.0 | 170 |

| SB-15 (04/26/16) | | |
|---|---|---|
| Depth | Arsenic | Lead |
| surface | 1.6 | □3.0 |

| SB-16 (04/26/16) | | |
|---|---|---|
| Depth | Arsenic | Lead |
| surface | 1.8 | □3.0 |

| SB-2 (04/29/16) | | |
|---|---|---|
| Depth | Arsenic | Lead |
| surface | 1.2 | □3.0 |

| SB-1 (04/29/16) | | |
|---|---|---|
| Depth | Arsenic | Lead |
| surface | 1.4 | 25 |

## LEGEND

- APPROXIMATE SUBJECT PROPERTY LINE
- SOIL AND SOIL VAPOR SAMPLING LOCATIONS
- EXISTING GROUNDWATER MONITORING WELLS
- SOIL VAPOR SAMPLING LOCATIONS
- SOIL AND GROUNDWATER SAMPLING LOCATIONS
- SOIL, GROUNDWATER AND SOIL VAPOR SAMPLING LOCATION
- 50□50□EXCAVATION AREAS OF SOILS TO BE STOCKPILED FOR ANALYSES

| Boring ID: (Date) | | |
|---|---|---|
| Depth | Arsenic | Lead |

SOIL ANALTICAL RESULTS FOR ARSENIC AND LEAD IN MILLIGRAMS PER KILOGRAM (mg/kg)

USEPA RSL□ — UNITED STATES ENVIRONMENTAL PROTECTION AGENCY REGIONAL SCREENING LEVEL (MAY 2016)

BLUE□ — EXCEEDS USEPA RSL, RESIDENTIAL SOIL

RED□ — EXCEEDS USEPA RSL, INDUSTRIAL

OEHHA□ — OFFICE OF ENVIRONMENTAL HEALTH HAZARD ASSESSMENT SCREENING LEVELS

EXCEEDS OEHHA SCREENING LEVELS (RESIDENTIAL)

EXCEEDS OEHHA SCREENING LEVELS (INDUSTRIAL)

N

0 150 300

APPROXIMATE SCALE IN FEET

## NOTES:

1. MAP REFERENCES; GOOGLE EARTH PRO AERIAL IMAGE, DATED APRIL 23, 2014. GLENDALE WATER AND POWER, FACILITIES SITE PLAN, SHEET NO. 1, 6095-A, DATED SEPTEMBER 11, 2008.
2. COORDINATE SYSTEM; NAD 83 CALIFORNIA STATE PLANES, ZONE 5 (FT.). NOT A SURVEYED MAP, SITE FEATURES AND LOCATIONS ARE APPROXIMATE.

No warranty is made by Stantec Consulting Services Inc. as to the accuracy, reliability, or completeness of these data. Original data were compiled from various sources. This information may not meet National Map Accuracy Standards. This product was developed electronically, and may be updated without notification. Any reproduction may result in a loss of scale and or information.

Stantec
290 Conejo Ridge Avenue
Thousand Oaks, CA 91361
PHONE: (805) 230-1266 FAX: (805) 230-1277

FOR:
GRAYSON POWER PLANT
PHASE II ESA
800 AIR WAY
GLENDALE, CALIFORNIA 91201

**SITE MAP WITH SOIL LEAD AND ARSENIC CONCENTRATIONS**

FIGURE: **5**

| JOB NUMBER: | DRAWN BY: | CHECKED BY: | APPROVED BY: | DATE: |
|---|---|---|---|---|
| 2057123300 | STA/RAR | AS/TS/KP | SR | 03/13/17 |

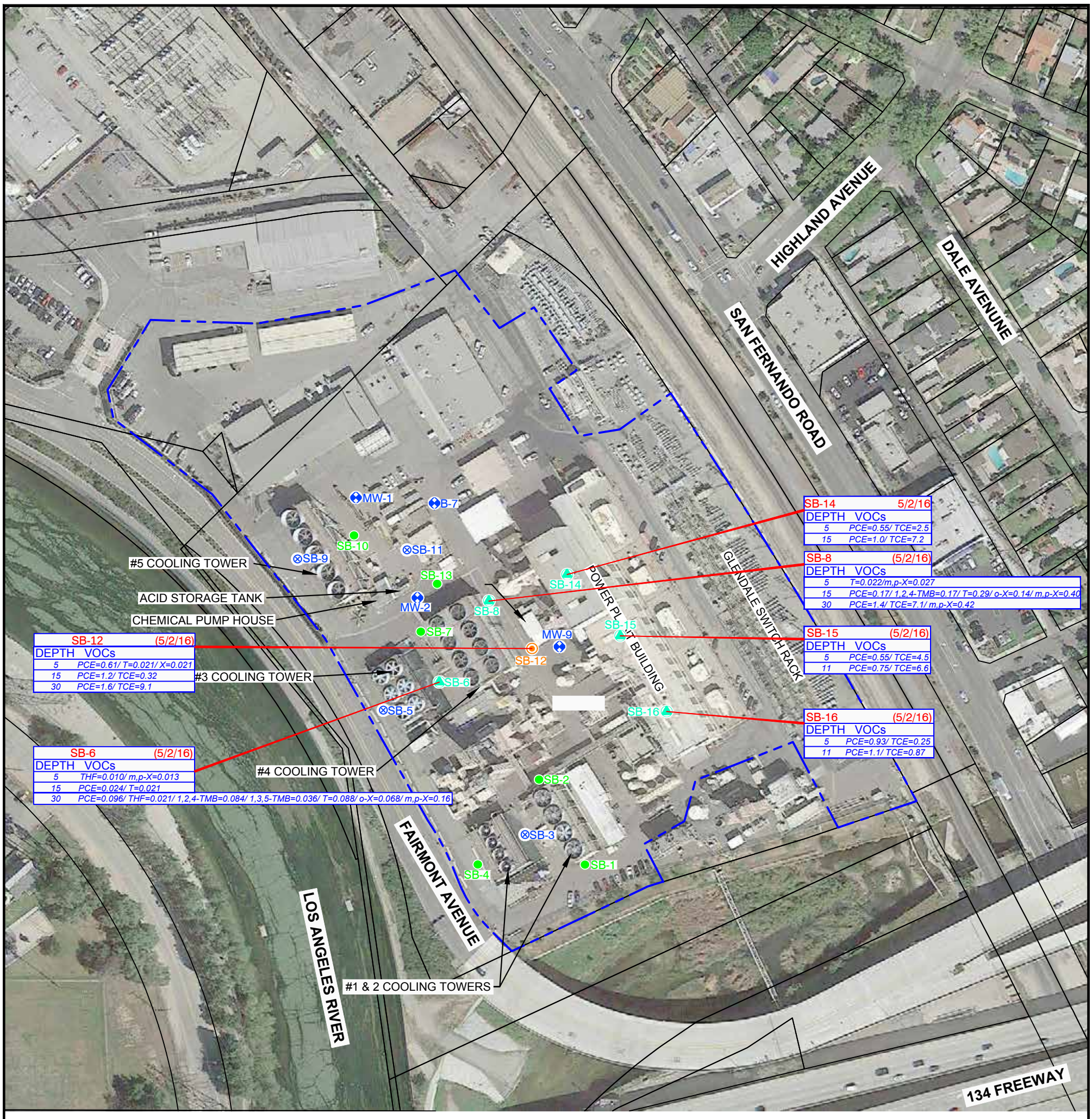


## LEGEND

- APPROXIMATE SUBJECT PROPERTY LINE
- SOIL SAMPLING LOCATIONS ONLY
- EXISTING GROUNDWATER MONITORING WELLS
- SOIL VAPOR SAMPLING SOIL BORING LOCATIONS
- GROUNDWATER SAMPLING SOIL BORING LOCATIONS
- SOIL, GROUNDWATER AND SOIL VAPOR SAMPLING SOIL BORING LOCATION

| | |
|---|---|
| VOCs | VOLATILE ORGANIC COMPOUNDS |
| DEPTHS | FEET BELOW GROUND SURFACE |
| o-X | o-XYLENES |
| m,p-X | m,p-XYLENES |
| T | TOLUENE |
| TCE | TRICHLOROETHENE |
| PCE | TETRACHLOROETHENE |
| THF | TETRAHYDROFURAN |

ALL RESULTS ARE IN MICROGRAMS PER LITER (ug/L)

N

0 150 300

APPROXIMATE SCALE IN FEET

## NOTES:

1. MAP REFERENCES; GOOGLE EARTH PRO AERIAL IMAGE, DATED APRIL 23, 2014. GLENDALE WATER AND POWER, FACILITIES SITE PLAN, SHEET NO. 1, 6095-A, DATED SEPTEMBER 11, 2008.
2. COORDINATE SYSTEM; NAD 83 CALIFORNIA STATE PLANES, ZONE 5 (FT.). NOT A SURVEYED MAP, SITE FEATURES AND LOCATIONS ARE APPROXIMATE.

No warranty is made by Stantec Consulting Services Inc. as to the accuracy, reliability, or completeness of these data. Original data were compiled from various sources. This information may not meet National Map Accuracy Standards. This product was developed electronically, and may be updated without notification. Any reproduction may result in a loss of scale and or information.

Stantec
290 Conejo Ridge Avenue
Thousand Oaks, CA 91361
PHONE: (805) 230-1266 FAX: (805) 230-1277

FOR:
GRAYSON POWER PLANT
PHASE II ESA
800 AIR WAY
GLENDALE, CALIFORNIA 91201

**SITE MAP WITH SOIL VAPOR VOCs CONCENTRATIONS**

FIGURE: **6**

| JOB NUMBER: | DRAWN BY: | CHECKED BY: | APPROVED BY: | DATE: |
|---|---|---|---|---|
| 2057123300 | STA | AS | TRS | 02/16/17 |

# APPENDICES

# Appendix A LIMITATIONS

This report was prepared in accordance with the scope of work outlined in Stantec's contract and with generally accepted professional engineering and environmental consulting practices existing at the time this report was prepared and applicable to the location of the Site. It was prepared for the exclusive use of GWP, for the express purpose stated above. Any re-use of this report for a different purpose or by others not identified above shall be at the user's sole risk without liability to Stantec. To the extent that this plan is based on information provided to Stantec by third parties, Stantec may have made efforts to verify this third-party information, but Stantec cannot guarantee the completeness or accuracy of this information.

The opinions expressed and data collected are based on the conditions of the Site existing at the time of the field investigations. No other warranties, expressed or implied are made by Stantec.

# Appendix B BORING LOGS AND ANALYTICAL RESULTS

| | |
|---|---|
| PROJECT: **Grayson Power Plant - Phase II ESA**<br>LOCATION: **800 Airway, Glendale, CA**<br>PROJECT NUMBER: **2057123300** | WELL / PROBEHOLE / BOREHOLE NO:<br>**SB-1** PAGE 1 OF 2 |
| DRILLING: STARTED: **4/29/2016** COMPLETED: **4/29/2016**<br>INSTALLATION: STARTED: **4/29/2016** COMPLETED: **4/29/2016**<br>DRILLING COMPANY: **Core Probe International**<br>DRILLING EQUIPMENT: **Geo Probe 7822 DT**<br>DRILLING METHOD: **HA/Direct Push**<br>SAMPLING EQUIPMENT: **Acetate Liners/Terracores/Jars** | NORTHING (ft): EASTING (ft):<br>LATITUDE: LONGITUDE:<br>GROUND ELEV (ft): TOC ELEV (ft):<br>INITIAL DTW (ft): **NE** BOREHOLE DEPTH (ft): **40.0**<br>STATIC DTW (ft): **NE** WELL DEPTH (ft): **NA**<br>WELL CASING DIAMETER (in): **NA** BOREHOLE DIAMETER (in): **2.25**<br>LOGGED BY: **J. Sargent** CHECKED BY: **A. Sawant** |

| Time & Depth (feet) | Graphic Log | USCS | Description | Sample | Time Sample ID | Measured Recov. (feet) | Blow Count/ft | Headspace PID (ppm) | Depth (feet) |
|---|---|---|---|---|---|---|---|---|---|
| | | | 4" Asphalt | | | | | | |
| | | SM | SM; Silty SAND; very dark grayish brown (2.5Y 3/2), little fine gravel, fine to coarse-grained sand, some fines, moist, asphalt fragments, faint hydrocarbon (HC) odor, some dark staining | | 0915 SB-1-1 | | | 0.9 | |
| | | | Intermitent asphalt and black staining from 3' to 10' | | | | | | |
| 5 | | | Dark staining | | 0944 SB-1-5 | | | 39.7 | 5 |
| 10 | | | Dark staining | | 0948 SB-1-10 | | | 8.6 | 10 |
| | | | Color change to dark yellowish brown (10YR 4/4), no staining | | | | | | |
| 15 | | | Fine-grained sand, olive brown (2.5Y 4/4), increase in fines | | | | | | 15 |
| 20 | | | Same as above | | -- -- | | | 0.0 | 20 |

GEO FORM 304_SECOR037_20160602_GINT_GRAYSON_SB-1_THROUGH_SB-16.GPJ SECOR037.GDT 6/9/16

| | |
|---|---|
| PROJECT: **Grayson Power Plant - Phase II ESA**<br>LOCATION: **800 Airway, Glendale, CA**<br>PROJECT NUMBER: **2057123300** | WELL / PROBEHOLE / BOREHOLE NO:<br>**SB-1** PAGE 2 OF 2 |
| DRILLING: STARTED: **4/29/2016** COMPLETED: **4/29/2016**<br>INSTALLATION: STARTED: **4/29/2016** COMPLETED: **4/29/2016**<br>DRILLING COMPANY: **Core Probe International**<br>DRILLING EQUIPMENT: **Geo Probe 7822 DT**<br>DRILLING METHOD: **HA/Direct Push**<br>SAMPLING EQUIPMENT: **Acetate Liners/Terracores/Jars** | NORTHING (ft): EASTING (ft):<br>LATITUDE: LONGITUDE:<br>GROUND ELEV (ft): TOC ELEV (ft):<br>INITIAL DTW (ft): **NE** BOREHOLE DEPTH (ft): **40.0**<br>STATIC DTW (ft): **NE** WELL DEPTH (ft): **NA**<br>WELL CASING DIAMETER (in): **NA** BOREHOLE DIAMETER (in): **2.25**<br>LOGGED BY: **J. Sargent** CHECKED BY: **A. Sawant** |

| Time & Depth (feet) | Graphic Log | USCS | Description | Sample | Time Sample ID | Measured Recov. (feet) | Blow Count/ft | Headspace PID (ppm) | Depth (feet) |
|---|---|---|---|---|---|---|---|---|---|
| | | SM | | | | | | | |
| 25 | | | Increase in fines | | -- -- | | | 0.0 | 25 |
| 30 | | | | | -- -- | | | 0.0 | 30 |
| | | ML | ML; Sandy SILT, olive brown (4/3 2.5Y), some sand, non-plastic fines, wet (perched) | | | | | | |
| | | SM | SM; Silty SAND, olive brown (4/3 2.5Y), fine-grained sand, non-plastic fines, no HC odor, no staining | | | | | | |
| 35 | | | | | -- -- | | | 0.0 | 35 |
| | | ML | ML; Sandy SILT, olive brown (4/3 2.5Y), some sand, non-plastic fines | | | | | | |
| | | SM | SM; Silty SAND, olive brown (4/3 2.5Y), fine-grained sand, non-plastic fines, no HC odor, no staining | | | | | | |
| | | | | | - - | | | 0.0 | |
| 40 | | | Borehole terminated at 40 feet bgs. | | | | | | 40 |

| | |
|---|---|
| PROJECT: **Grayson Power Plant - Phase II ESA**<br>LOCATION: **800 Airway, Glendale, CA**<br>PROJECT NUMBER: **2057123300** | WELL / PROBEHOLE / BOREHOLE NO:<br>**SB-2** PAGE 1 OF 2 |
| DRILLING: STARTED: **4/29/2016** COMPLETED: **4/29/2016**<br>INSTALLATION: STARTED: **4/29/2016** COMPLETED: **4/29/2016**<br>DRILLING COMPANY: **Core Probe International**<br>DRILLING EQUIPMENT: **Geo Probe 7822 DT**<br>DRILLING METHOD: **HA/Direct Push**<br>SAMPLING EQUIPMENT: **Acetate Liners/Terracores/Jars** | NORTHING (ft): EASTING (ft):<br>LATITUDE: LONGITUDE:<br>GROUND ELEV (ft): TOC ELEV (ft):<br>INITIAL DTW (ft): **NE** BOREHOLE DEPTH (ft): **40.0**<br>STATIC DTW (ft): **NE** WELL DEPTH (ft): **NA**<br>WELL CASING DIAMETER (in): **NA** BOREHOLE DIAMETER (in): **2.25**<br>LOGGED BY: **J. Sargent** CHECKED BY: **A. Sawant** |

| Time & Depth (feet) | Graphic Log | USCS | Description | Sample | Time Sample ID | Measured Recov. (feet) | Blow Count/ft | Headspace PID (ppm) | Depth (feet) |
|---|---|---|---|---|---|---|---|---|---|
| | | | 4" Asphalt | | | | | | |
| | | SM | SM; Silty SAND, olive brown (2.5Y 4/2), fine-grained sand, some fines, moist, no hydrocarbon (HC) odor, no staining | | 0755 SB-2-1 | | | 0.0 | |
| 5 | | | Same as above | | -- -- | | | 0.0 | 5 |
| | | | Very dark grayish brown (10YR 3/2) | | | | | | |
| 10 | | | | | 0820 SB-2-10 | | | 0.1 | 10 |
| | | | Fine-grained sand, no gravel, increase in fines | | | | | | |
| 15 | | | | | | | | | 15 |
| 20 | | | | | 0825 SB-2-25 | | | 0.0 | 20 |
| | | | Olive brown (2.5Y 4/4), trace fine gravel | | | | | | |

| | |
|---|---|
| PROJECT: **Grayson Power Plant - Phase II ESA**<br>LOCATION: **800 Airway, Glendale, CA**<br>PROJECT NUMBER: **2057123300** | WELL / PROBEHOLE / BOREHOLE NO:<br>**SB-2** PAGE 2 OF 2 |
| DRILLING: STARTED: **4/29/2016** COMPLETED: **4/29/2016**<br>INSTALLATION: STARTED: **4/29/2016** COMPLETED: **4/29/2016**<br>DRILLING COMPANY: **Core Probe International**<br>DRILLING EQUIPMENT: **Geo Probe 7822 DT**<br>DRILLING METHOD: **HA/Direct Push**<br>SAMPLING EQUIPMENT: **Acetate Liners/Terracores/Jars** | NORTHING (ft): EASTING (ft):<br>LATITUDE: LONGITUDE:<br>GROUND ELEV (ft): TOC ELEV (ft):<br>INITIAL DTW (ft): **NE** BOREHOLE DEPTH (ft): **40.0**<br>STATIC DTW (ft): **NE** WELL DEPTH (ft): **NA**<br>WELL CASING DIAMETER (in): **NA** BOREHOLE DIAMETER (in): **2.25**<br>LOGGED BY: **J. Sargent** CHECKED BY: **A. Sawant** |

| Time & Depth (feet) | Graphic Log | USCS | Description | Sample | Time Sample ID | Measured Recov. (feet) | Blow Count/ft | Headspace PID (ppm) | Depth (feet) |
|---|---|---|---|---|---|---|---|---|---|
| | | SM | | | | | | | |
| | | ML | ML; Sandy SILT, olive brown (2.5Y 4/4), some very fine to fine-grained sand, non-plastic fines, moist, no HC odor, no staining | | | | | | |
| 25 | | | | | -- | | | 0.0 | 25 |
| | | SM | SM; Silty SAND, olive brown (2.5Y 4/4), fine-grained sand, some fines, moist, no HC odor, no staining | | | | | | |
| 30 | | | | | -- | | | 0.0 | 30 |
| | | SC | SC; Clayey SAND, olive brown (2.5Y 4/4), fine-grained sand, low to med, plasticity fines, wet (perched), no HC odor, no staining | | | | | | |
| | | SM | SM; Silty SAND, olive brown (2.5Y 4/4), fine-grained sand, some fines, moist, no HC odor, no staining | | | | | | |
| 35 | | | | | -- | | | 0.0 | 35 |
| | | SC | SC; Clayey SAND, olive brown (2.5Y 4/4), fine-grained sand, low to med, plasticity fines, wet (perched), no HC odor, no staining | | | | | | |
| | | SM | SM; Silty SAND, olive brown (2.5Y 4/4), fine-grained sand, some fines, moist, no HC odor, no staining | | | | | | |
| | | | | | -- | | | 0.0 | |
| 40 | | | Borehole terminated at 40 feet bgs. | | | | | | 40 |

| | |
|---|---|
| PROJECT: **Grayson Power Plant - Phase II ESA**<br>LOCATION: **800 Airway, Glendale, CA**<br>PROJECT NUMBER: **2057123300** | WELL / PROBEHOLE / BOREHOLE NO:<br>**SB-3** PAGE 1 OF 3 |
| DRILLING: STARTED: **4/28/2016** COMPLETED: **4/28/2016**<br>INSTALLATION: STARTED: **4/28/2016** COMPLETED: **4/28/2016**<br>DRILLING COMPANY: **Core Probe International**<br>DRILLING EQUIPMENT: **Geo Probe 7822 DT**<br>DRILLING METHOD: **HA/Direct Push**<br>SAMPLING EQUIPMENT: **Acetate Liners/Terracores/Jars** | NORTHING (ft): EASTING (ft):<br>LATITUDE: LONGITUDE:<br>GROUND ELEV (ft): TOC ELEV (ft):<br>INITIAL DTW (ft): **44** BOREHOLE DEPTH (ft): **50.0**<br>STATIC DTW (ft): **46.3** WELL DEPTH (ft): **NA**<br>WELL CASING DIAMETER (in): **NA** BOREHOLE DIAMETER (in): **2.25**<br>LOGGED BY: **J. Sargent** CHECKED BY: **A. Sawant** |

| Time & Depth (feet) | Graphic Log | USCS | Description | Sample | Time Sample ID | Measured Recov. (feet) | Blow Count/ft | Headspace PID (ppm) | Depth (feet) |
|---|---|---|---|---|---|---|---|---|---|
| | | | 3" Asphalt | | | | | | |
| | | SM | SM; Silty SAND, brown (7.5YR 4/3), trace fine gravel, fine to coarse-grained sand, some fines, wet (adjacent to cooling tower pond) | | 0643<br>SB-3-1 | | | 0.9 | |
| 5 | | | Same as above, slight increase in gravel | | -- | | | 0.0 | 5 |
| 10 | | | Same as above | | -- | | | 1.0 | 10 |
| 15 | | | Same as above, fine to medium-grained sand, no gravel, increase in fines | | -- | | | 1.2 | 15 |
| | | ML | ML; Sandy SILT, dark yellowish brown (10YR 4/4), some fine-graine sand, med. to low plasticity fines, moist, no HC odor, no staining | | | | | | |
| 20 | | SM | SM; Silty SAND, dark yellowish brown (10YR 4/4), fine to med.-grained sand, moist, no HC odor, no staining | | -- | | | 1.5 | 20 |

GEO FORM 304_SECOR037 20160602_GINT_GRAYSON_SB-1_THROUGH_SB-16.GPJ SECOR037.GDT 6/9/16

| | |
|---|---|
| PROJECT: **Grayson Power Plant - Phase II ESA**<br>LOCATION: **800 Airway, Glendale, CA**<br>PROJECT NUMBER: **2057123300** | WELL / PROBEHOLE / BOREHOLE NO:<br>**SB-3** PAGE 2 OF 3 |
| DRILLING: STARTED: **4/28/2016** COMPLETED: **4/28/2016**<br>INSTALLATION: STARTED: **4/28/2016** COMPLETED: **4/28/2016**<br>DRILLING COMPANY: **Core Probe International**<br>DRILLING EQUIPMENT: **Geo Probe 7822 DT**<br>DRILLING METHOD: **HA/Direct Push**<br>SAMPLING EQUIPMENT: **Acetate Liners/Terracores/Jars** | NORTHING (ft): EASTING (ft):<br>LATITUDE: LONGITUDE:<br>GROUND ELEV (ft): TOC ELEV (ft):<br>INITIAL DTW (ft): **44** BOREHOLE DEPTH (ft): **50.0**<br>STATIC DTW (ft): **46.3** WELL DEPTH (ft): **NA**<br>WELL CASING DIAMETER (in): **NA** BOREHOLE DIAMETER (in): **2.25**<br>LOGGED BY: **J. Sargent** CHECKED BY: **A. Sawant** |

| Time & Depth (feet) | Graphic Log | USCS | Description | Sample | Time Sample ID | Measured Recov. (feet) | Blow Count/ft | Headspace PID (ppm) | Depth (feet) |
|---|---|---|---|---|---|---|---|---|---|
| | | SW-SM | SW-SM; Well graded SAND with Silt, light olive brown (2.5Y 5/4), fine to coarse-grained sand, little fines, moist, no HC odor, no staining | | | | | | |
| | | SM | SM; Silty SAND, olive brown (2.5Y 4/4), fine-grained sand, some fines, moist, no HC odor, no staining | | -- -- | | | 0.7 | |
| 25 | | | | | | | | | 25 |
| | | CL | CL; Lean CLAY with Sand, olive brown (2.5Y 4/4), little fine-grained sand, med. to high plasticity fines, wet (perched), no HC odor, no staining | | | | | | |
| | | SM | SM; Silty SAND, olive brown (2.5Y 4/3), fine to medium-grained sand, some fines, moist, no HC odor, no staining | | -- -- | | | 1.6 | |
| 30 | | | | | | | | | 30 |
| | | SP-SM | SP-SM; Poorly Graded SAND with Silt, light olive brown (2.5Y 5/3), fine-grained sand, little fines, moist, no HC odor, no staining | | | | | | |
| 35 | | | | | 0709 SB-3-35 | | | 2.2 | 35 |
| | | CL | CL; Interbedded Lean CLAY with Sand, and poorly graded SAND with Silt, olive brown (2.5Y 4/4) | | | | | | |
| | | CL | CL; Some sand | | | | | | |
| | | SP | SP; Fine-grained SAND, little fines, mist | | | | | | |
| | | SC | SC; Clayey SAND, dark olive gray (5Y 3/2), fine to coarse-grained sand, some med. plasticity fines, wet, no HC odor, no staining | | | | | | |
| 40 | | | | | 0712 SB-3-40 | | | 1.7 | 40 |
| | | SM | Same as above, fine to coarse-grained sand<br>SM; Silty SAND, olive (5Y 5/3), very fine-grained sand, some fines, moist, no HC odor, no staining | | | | | | |

GEO FORM 304_SECOR037 20160602_GINT_GRAYSON_SB-1_THROUGH_SB-16.GPJ SECOR037.GDT 6/9/16

| | |
|---|---|
| PROJECT: **Grayson Power Plant - Phase II ESA**<br>LOCATION: **800 Airway, Glendale, CA**<br>PROJECT NUMBER: **2057123300** | WELL / PROBEHOLE / BOREHOLE NO:<br>**SB-3** PAGE 3 OF 3 |
| DRILLING: STARTED: **4/28/2016** COMPLETED: **4/28/2016**<br>INSTALLATION: STARTED: **4/28/2016** COMPLETED: **4/28/2016**<br>DRILLING COMPANY: **Core Probe International**<br>DRILLING EQUIPMENT: **Geo Probe 7822 DT**<br>DRILLING METHOD: **HA/Direct Push**<br>SAMPLING EQUIPMENT: **Acetate Liners/Terracores/Jars** | NORTHING (ft): EASTING (ft):<br>LATITUDE: LONGITUDE:<br>GROUND ELEV (ft): TOC ELEV (ft):<br>INITIAL DTW (ft): **44** BOREHOLE DEPTH (ft): **50.0**<br>STATIC DTW (ft): **46.3** WELL DEPTH (ft): **NA**<br>WELL CASING DIAMETER (in): **NA** BOREHOLE DIAMETER (in): **2.25**<br>LOGGED BY: **J. Sargent** CHECKED BY: **A. Sawant** |

| Time & Depth (feet) | Graphic Log | USCS | Description | Sample | Time Sample ID | Measured Recov. (feet) | Blow Count/ft | Headspace PID (ppm) | Depth (feet) |
|---|---|---|---|---|---|---|---|---|---|
| 45 | | SM | | | 0743 SB-3-GW | | | 0.0 | 45 |
| | | | Same as above, trace fine to coarse gravel | | | | | | |
| 50 | | | Borehole terminated at 50 feet bgs. | | | | | | 50 |
| 55 | | | | | | | | | 55 |
| 60 | | | | | | | | | 60 |
| 65 | | | | | | | | | 65 |

GEO FORM 304_SECOR037 20160602_GINT_GRAYSON_SB-1_THROUGH_SB-16.GPJ SECOR037.GDT 6/9/16

| | |
|---|---|
| PROJECT: **Grayson Power Plant - Phase II ESA**<br>LOCATION: **800 Airway, Glendale, CA**<br>PROJECT NUMBER: **2057123300** | WELL / PROBEHOLE / BOREHOLE NO:<br>**SB-4** PAGE 1 OF 2 |
| DRILLING: STARTED: **4/29/2016** COMPLETED: **4/29/2016**<br>INSTALLATION: STARTED: **4/29/2016** COMPLETED: **4/29/2016**<br>DRILLING COMPANY: **Core Probe International**<br>DRILLING EQUIPMENT: **Geo Probe 7822 DT**<br>DRILLING METHOD: **Direct Push**<br>SAMPLING EQUIPMENT: **Acetate Liners/Terracores/Jars** | NORTHING (ft): EASTING (ft):<br>LATITUDE: LONGITUDE:<br>GROUND ELEV (ft): TOC ELEV (ft):<br>INITIAL DTW (ft): **NE** BOREHOLE DEPTH (ft): **40.0**<br>STATIC DTW (ft): **NE** WELL DEPTH (ft): **NA**<br>WELL CASING DIAMETER (in): **NA** BOREHOLE DIAMETER (in): **2.25**<br>LOGGED BY: **J. Sargent** CHECKED BY: **A. Sawant** |

| Time & Depth (feet) | Graphic Log | USCS | Description | Sample | Time Sample ID | Measured Recov. (feet) | Blow Count/ft | Headspace PID (ppm) | Depth (feet) |
|---|---|---|---|---|---|---|---|---|---|
| | | | 4" Asphalt | | | | | | |
| | | SM | SM; Silty SAND, dark yellowish brown (10YR 4/4), fine to coarse-grained sand, some fines, wet (adjacent to cooling tower pond), no hydrocarbon (HC) odor, no staining | ■ ■ | 0820 SB-4-1 | | | 0.0 | |
| 5 | | | Same as above | | -- -- | | | 0.0 | 5 |
| | | | Color change to dark brown (10YR 3/3), minor brick and asphalt fragments | | | | | | |
| 10 | | | Minor brick and asphalt fragments | ■ ■ | 0858 SB-4-10 | | | 0.0 | 10 |
| | | | Large rock at 11.5' bgs<br>Same as above | | | | | | |
| | | | Color change to dark yellowish brown (10YR 4/6) | | | | | | |
| 15 | | | Same as above, trace coarse gravel | | -- -- | | | 0.0 | 15 |
| 20 | | | Same as above, fine to med.-grained sand, no gravel | ■ ■ | 0904 SB-4-20 | | | 1.5 | 20 |

| | |
|---|---|
| PROJECT: **Grayson Power Plant - Phase II ESA**<br>LOCATION: **800 Airway, Glendale, CA**<br>PROJECT NUMBER: **2057123300** | WELL / PROBEHOLE / BOREHOLE NO:<br>**SB-4** PAGE 2 OF 2 |
| DRILLING: STARTED: **4/29/2016** COMPLETED: **4/29/2016**<br>INSTALLATION: STARTED: **4/29/2016** COMPLETED: **4/29/2016**<br>DRILLING COMPANY: **Core Probe International**<br>DRILLING EQUIPMENT: **Geo Probe 7822 DT**<br>DRILLING METHOD: **Direct Push**<br>SAMPLING EQUIPMENT: **Acetate Liners/Terracores/Jars** | NORTHING (ft): EASTING (ft):<br>LATITUDE: LONGITUDE:<br>GROUND ELEV (ft): TOC ELEV (ft):<br>INITIAL DTW (ft): **NE** BOREHOLE DEPTH (ft): **40.0**<br>STATIC DTW (ft): **NE** WELL DEPTH (ft): **NA**<br>WELL CASING DIAMETER (in): **NA** BOREHOLE DIAMETER (in): **2.25**<br>LOGGED BY: **J. Sargent** CHECKED BY: **A. Sawant** |

| Time & Depth (feet) | Graphic Log | USCS | Description | Sample | Time Sample ID | Measured Recov. (feet) | Blow Count/ft | Headspace PID (ppm) | Depth (feet) |
|---|---|---|---|---|---|---|---|---|---|
| | | SM | | | | | | | |
| | | | | | -- -- | | | 0.1 | |
| 25 | | | Same as above, fine-grained sand | | | | | | 25 |
| | | | | | -- -- | | | 0.0 | |
| 30 | | ML | Same as above<br>ML; Sandy SILT, olive brown (2.5Y 4/6), some fine-grained sand, non-plastic fines, moist, no HC odor, no staining | | | | | | 30 |
| | | SM | SM; Silty SAND, light olive brown (2.5Y 5/3), fine-grained sand, some fines, moist, no HC odor or staining | | | | | | |
| 35 | | | | ■ | -- -- | | | 0.1 | 35 |
| | | ML | ML; Sandy SILT, olive brown (2.5Y 4/6), some fine-grained sand, non-plastic fines, moist, no HC odor, no staining | | | | | | |
| | | SM | SM; Silty SAND, light olive brown (2.5Y 5/3), fine-grained sand, some fines, moist, no HC odor or staining | | | | | | |
| 40 | | | Borehole terminated at 40 feet bgs. | | | | | | 40 |

| | |
|---|---|
| PROJECT: **Grayson Power Plant - Phase II ESA**<br>LOCATION: **800 Airway, Glendale, CA**<br>PROJECT NUMBER: **2057123300** | WELL / PROBEHOLE / BOREHOLE NO:<br>**SB-5** PAGE 1 OF 3 |
| DRILLING: STARTED: **4/28/2016** COMPLETED: **4/28/2016**<br>INSTALLATION: STARTED: **4/28/2016** COMPLETED: **4/28/2016**<br>DRILLING COMPANY: **Core Probe International**<br>DRILLING EQUIPMENT: **Geo Probe 7822 DT**<br>DRILLING METHOD: **Direct Push**<br>SAMPLING EQUIPMENT: **Acetate Liners/Terracores/Jars** | NORTHING (ft): EASTING (ft):<br>LATITUDE: LONGITUDE:<br>GROUND ELEV (ft): TOC ELEV (ft):<br>INITIAL DTW (ft): **42** BOREHOLE DEPTH (ft): **50.0**<br>STATIC DTW (ft): **44.6** WELL DEPTH (ft): **NA**<br>WELL CASING DIAMETER (in): **NA** BOREHOLE DIAMETER (in): **2.25**<br>LOGGED BY: **J. Sargent** CHECKED BY: **A. Sawant** |

| Time & Depth (feet) | Graphic Log | USCS | Description | Sample | Time Sample ID | Measured Recov. (feet) | Blow Count/ft | Headspace PID (ppm) | Depth (feet) |
|---|---|---|---|---|---|---|---|---|---|
| | | | 4" Asphalt | | | | | | |
| | | SM | SM; Silty SAND with Gravel; dark olive brown (2.5Y 3/3), fine to coarse-grained sand, fine to coarse gravel, some fines, asphalt fragments abundant, moist, no hydrocarbon (HC) odor, no staining, appears to be fill material as noted by all debris | | 0826 SB-5-1 | | | 0.1 | |
| | | | Some glass fragments observed | | -- -- | | | 0.7 | |
| 5 | | | | | | | | | 5 |
| | | | Same as above, minor asphalt fragments observed | | | | | | |
| | | | Glass fragments observed | | 0840 SB-5-10 | | | 1.1 | |
| 10 | | | | | | | | | 10 |
| | | | Same as above | | | | | | |
| | | | Color change to olive brown (2.5Y 4/4) | | -- -- | | | 2.6 | |
| 15 | | | | | | | | | 15 |
| | | | Same as above, minor asphalt fragments observed | | 0848 SB-5-20 | | | 6.1 | |
| 20 | | | | | | | | | 20 |
| | | SM | SM; Silty SAND with Gravel, light olive brown (2.5Y 5/3), fine to coarse-grained sand, some fines, moist, fine to coarse gravel, no HC odor, no staining | | | | | | |

GEO FORM 304_SECOR037 20160602_GINT_GRAYSON_SB-1_THROUGH_SB-16.GPJ SECOR037.GDT 6/9/16

| | |
|---|---|
| PROJECT: **Grayson Power Plant - Phase II ESA**<br>LOCATION: **800 Airway, Glendale, CA**<br>PROJECT NUMBER: **2057123300** | WELL / PROBEHOLE / BOREHOLE NO:<br>**SB-5** PAGE 2 OF 3 |
| DRILLING: STARTED: **4/28/2016** COMPLETED: **4/28/2016**<br>INSTALLATION: STARTED: **4/28/2016** COMPLETED: **4/28/2016**<br>DRILLING COMPANY: **Core Probe International**<br>DRILLING EQUIPMENT: **Geo Probe 7822 DT**<br>DRILLING METHOD: **Direct Push**<br>SAMPLING EQUIPMENT: **Acetate Liners/Terracores/Jars** | NORTHING (ft): EASTING (ft):<br>LATITUDE: LONGITUDE:<br>GROUND ELEV (ft): TOC ELEV (ft):<br>INITIAL DTW (ft): **42** BOREHOLE DEPTH (ft): **50.0**<br>STATIC DTW (ft): **44.6** WELL DEPTH (ft): **NA**<br>WELL CASING DIAMETER (in): **NA** BOREHOLE DIAMETER (in): **2.25**<br>LOGGED BY: **J. Sargent** CHECKED BY: **A. Sawant** |

| Time & Depth (feet) | Graphic Log | USCS | Description | Sample | Time Sample ID | Measured Recov. (feet) | Blow Count/ft | Headspace PID (ppm) | Depth (feet) |
|---|---|---|---|---|---|---|---|---|---|
| | | SM | | | | | | | |
| | | | | | -- -- | | | 4.9 | |
| 25 | | | Same as above | | | | | | 25 |
| | | | Same as above | | 0857 SB-5-30 | | | 5.5 | |
| 30 | | | | | | | | | 30 |
| | | ML | ML; Sandy SILT, brown (7.5YR 4/3), some fine-graine sand, non-plastic fines, moist, slight oxidation, no HC odor, no staining | | | | | | |
| | | SW-SM | SW-SM; Well graded SAND with Silt, grayish brown (2.5Y 5/2), fine to coarse-grained sand, little fines, moist, no HC odor | | | | | | |
| | | | | | -- -- | | | 3.9 | |
| 35 | | | | | | | | | 35 |
| | | | Limited recovery | | | | | | |
| 40 | | | | | | | | | 40 |
| | | SM | SM; Silty SAND, very dark grayish brown (2.5Y 3/2), fine-grained sand, some fines, wet at 42' bgs, no HC odor, no staining | | 1110 SB-5-GW | | | | ▽ |

PROJECT: **Grayson Power Plant - Phase II ESA**
LOCATION: **800 Airway, Glendale, CA**
PROJECT NUMBER: **2057123300**

WELL / PROBEHOLE / BOREHOLE NO: **SB-5** PAGE 3 OF 3

Stantec

DRILLING: STARTED: **4/28/2016** COMPLETED: **4/28/2016**
INSTALLATION: STARTED: **4/28/2016** COMPLETED: **4/28/2016**
DRILLING COMPANY: **Core Probe International**
DRILLING EQUIPMENT: **Geo Probe 7822 DT**
DRILLING METHOD: **Direct Push**
SAMPLING EQUIPMENT: **Acetate Liners/Terracores/Jars**

NORTHING (ft):
EASTING (ft):
LATITUDE:
LONGITUDE:
GROUND ELEV (ft):
TOC ELEV (ft):
INITIAL DTW (ft): **42**
BOREHOLE DEPTH (ft): **50.0**
STATIC DTW (ft): **44.6**
WELL DEPTH (ft): **NA**
WELL CASING DIAMETER (in): **NA**
BOREHOLE DIAMETER (in): **2.25**
LOGGED BY: **J. Sargent**
CHECKED BY: **A. Sawant**

| Time & Depth (feet) | Graphic Log | USCS | Description | Sample | Time Sample ID | Measured Recov. (feet) | Blow Count/ft | Headspace PID (ppm) | Depth (feet) |
|---|---|---|---|---|---|---|---|---|---|
| 45 | | SM | Heaving sand conditions, sand entered drilling rods when refracting sampler | | | | | | 45 |
| | | | Well Graded SAND, olive (5Y 4/3), fine to coarse-grained sand, trace fines, wet, no HC odor, no staining | | | | | | |
| 50 | | | Borehole terminated at 50 feet bgs. | | | | | | 50 |
| 55 | | | | | | | | | 55 |
| 60 | | | | | | | | | 60 |
| 65 | | | | | | | | | 65 |

PROJECT: **Grayson Power Plant - Phase II ESA**
LOCATION: **800 Airway, Glendale, CA**
PROJECT NUMBER: **2057123300**

WELL / PROBEHOLE / BOREHOLE NO: **SB-6** PAGE 1 OF 2

Stantec

DRILLING: STARTED: **4/27/2016** COMPLETED: **4/27/2016**
INSTALLATION: STARTED: **4/27/2016** COMPLETED: **4/27/2016**
DRILLING COMPANY: **Core Probe International**
DRILLING EQUIPMENT: **Geo Probe 7822 DT**
DRILLING METHOD: **Direct Push**
SAMPLING EQUIPMENT: **Acetate Liners/Terracores/Jars**

NORTHING (ft): EASTING (ft):
LATITUDE: LONGITUDE:
GROUND ELEV (ft): TOC ELEV (ft):
INITIAL DTW (ft): **NE** BOREHOLE DEPTH (ft): **40.0**
STATIC DTW (ft): **NE** WELL DEPTH (ft): **NA**
WELL CASING DIAMETER (in): **NA** BOREHOLE DIAMETER (in): **2.25**
LOGGED BY: **J. Sargent** CHECKED BY: **A. Sawant**

| Time & Depth (feet) | Graphic Log | USCS | Description | Sample | Time Sample ID | Measured Recov. (feet) | Blow Count/ft | Headspace PID (ppm) | Depth (feet) | Well Construction |
|---|---|---|---|---|---|---|---|---|---|---|
| | | | 4" Asphalt | | | | | | | |
| | | SM | SM; Silty SAND with Gravel, brown (10YR 4/3), fine to coarse-grained sand, some fine to coarse gravel, some fines, wet (adjacent to cooling tower pond), no hydrocarbon (HC) odor, no staining | ■ | 1104 SB-6-1 | | | 0.2 | | Bentonite grout |
| | | | Refusal at 2.5' bgs, very large rocks, stepping out to south<br>Step out boring encountered conduit at 2.5' bgs | | | | | | | |
| | | | Wire, brick, glass, spark plug in upper 5' | | -- -- | | | 0.0 | | Bentonite chips<br>#3 sand |
| 5 | | | | | | | | | 5 | 10" Stainless steel vapor implant |
| | | | Minor screen staining observed | | | | | | | |
| | | | Asphalt fragments with glass observed | | | | | | | |
| | | | | ■ | 1240 SB-6-10 | | | 18.5 | | |
| 10 | | | Same as above, asphalt fragments observed | | | | | | 10 | Bentonite grout |
| | | | | ■ | 1242 SB-6-15 | | | 1.4 | | Bentonite chips<br>#3 sand |
| 15 | | | Slight staining from asphalt, glass fragments, fill material | | | | | | 15 | 10" Stainless steel vapor implant<br>#3 sand |
| | | SM | SM; Native, no debris, soil appears uniform and undisturbed. Silty SAND, brown (7.5YR 4/4), fine to med.-grained sand, some fines, moist, no HC odor, no staining | | -- -- | | | 1.8 | | |
| | | | | | -- -- | | | 1.7 | | |
| 20 | | | | | | | | | 20 | |

GEO FORM 304_SECOR037 20160602_GINT_GRAYSON_SB-1_THROUGH_SB-16.GPJ SECOR037.GDT 6/9/16

| | |
|---|---|
| PROJECT: **Grayson Power Plant - Phase II ESA**<br>LOCATION: **800 Airway, Glendale, CA**<br>PROJECT NUMBER: **2057123300** | WELL / PROBEHOLE / BOREHOLE NO:<br>**SB-6** PAGE 2 OF 2 |
| DRILLING: STARTED: **4/27/2016** COMPLETED: **4/27/2016**<br>INSTALLATION: STARTED: **4/27/2016** COMPLETED: **4/27/2016**<br>DRILLING COMPANY: **Core Probe International**<br>DRILLING EQUIPMENT: **Geo Probe 7822 DT**<br>DRILLING METHOD: **Direct Push**<br>SAMPLING EQUIPMENT: **Acetate Liners/Terracores/Jars** | NORTHING (ft): EASTING (ft):<br>LATITUDE: LONGITUDE:<br>GROUND ELEV (ft): TOC ELEV (ft):<br>INITIAL DTW (ft): **NE** BOREHOLE DEPTH (ft): **40.0**<br>STATIC DTW (ft): **NE** WELL DEPTH (ft): **NA**<br>WELL CASING DIAMETER (in): **NA** BOREHOLE DIAMETER (in): **2.25**<br>LOGGED BY: **J. Sargent** CHECKED BY: **A. Sawant** |

| Time & Depth (feet) | Graphic Log | USCS | Description | Sample | Time Sample ID | Measured Recov. (feet) | Blow Count/ft | Headspace PID (ppm) | Depth (feet) | Well Construction |
|---|---|---|---|---|---|---|---|---|---|---|
| | | SM | | | | | | | | Bentonite grout |
| | | ML | ML; Sandy SILT, brown (7.5YR 4/3), some fine-grained sand, non to low plasticity fines, moist, no hydrocarbon (HC) odor, no staining | | | | | | | |
| | | CL | CL; Lean CLAY, brown (7.5YR 4/2), trace fine-grained sand, med. to high plasticity fines, moist, no HC odor, no staining | | -- -- | | | 2.1 | | |
| 25 | | | | | | | | | 25 | |
| | | | | | | | | | | Bentonite chips<br>#3 sand |
| | | SC | SC; Clayey SAND, brown (7.5YR 4/3), fine to med.-grained sand, some med. plasticity fines, moist, no HC odor, no staining | | -- -- | | | 2.3 | | |
| 30 | | | | | | | | | 30 | 10" Stainless steel vapor implant |
| | | SM | SM; Silty SAND, brown (7.5YR 4/3), fine to med.-grained sand, some non plastic fines, moist, no HC odor, no staining | | | | | | | |
| | | SP-SM | SP-SM; Poorly Graded SAND with Silt, brown (10YR 5/3), fine-grained sand, little fines, moist, no HC odor, no staining | | 1251 SB-6-35 | | | 2.5 | | |
| 35 | | | | | | | | | 35 | |
| | | SM | SM; Silty SAND, brown (7.5YR 4/3), fine to med.-grained sand, some fines, moist, no HC odor, no staining<br><br>Same as above, trace fine gravel | | | | | | | |
| 40 | | | Borehole terminated at 40 feet bgs. | | | | | | 40 | |

| | |
|---|---|
| PROJECT: **Grayson Power Plant - Phase II ESA**<br>LOCATION: **800 Airway, Glendale, CA**<br>PROJECT NUMBER: **2057123300** | WELL / PROBEHOLE / BOREHOLE NO:<br>**SB-7** PAGE 1 OF 2 |
| DRILLING: STARTED: **4/27/2016** COMPLETED: **4/27/2016**<br>INSTALLATION: STARTED: **4/27/2016** COMPLETED: **4/27/2016**<br>DRILLING COMPANY: **Core Probe International**<br>DRILLING EQUIPMENT: **Geo Probe 7822 DT**<br>DRILLING METHOD: **Direct Push**<br>SAMPLING EQUIPMENT: **Acetate Liners/Terracores/Jars** | NORTHING (ft): EASTING (ft):<br>LATITUDE: LONGITUDE:<br>GROUND ELEV (ft): TOC ELEV (ft):<br>INITIAL DTW (ft): **NE** BOREHOLE DEPTH (ft): **40.0**<br>STATIC DTW (ft): **NE** WELL DEPTH (ft): **NA**<br>WELL CASING DIAMETER (in): **NA** BOREHOLE DIAMETER (in): **2.25**<br>LOGGED BY: **J. Sargent** CHECKED BY: **A. Sawant** |

| Time & Depth (feet) | Graphic Log | USCS | Description | Sample | Time Sample ID | Measured Recov. (feet) | Blow Count/ft | Headspace PID (ppm) | Depth (feet) |
|---|---|---|---|---|---|---|---|---|---|
| | | | 4" Asphalt | | | | | | |
| | | SM | SM; Silty SAND with Gravel, brown (10YR 4/3), fine to coarse-grained sand, some fine to coarse gravel, some fines, wet (adjacent to cooling tower pond), no hydrocarbon (HC) odor, no staining | | 1134 SB-7-1 | | | 0.1 | |
| | | | | | -- -- | | | 0.2 | |
| 5 | | | Same as above | | | | | | 5 |
| | | | Very dark staining, black (7.5YR 2.5/1), faint HC odor | | -- -- | | | 0.2 | |
| | | | No staining, no odor, brown (7.5YR 4/3) | | 1335 SB-7-10 | | | 0.4 | |
| 10 | | | | | | | | | 10 |
| | | | Heavy staining, very dark gray (7.5YR 3/1), slight HC odor | | | | | | |
| | | | | | 1337 SB-7-15 | | | 2.3 | |
| 15 | | | Black (7.5YR 2.5/1) | | | | | | 15 |
| | | | | | -- -- | | | 1.8 | |
| | | | | | -- -- | | | 0.6 | |
| 20 | | | Light staining, appears to be fill material | | | | | | 20 |
| | | SM | SM; Silty SAND, light olive brown (2.5Y 5/3), fine-grained sand, some fines, moist, no HC odor, no staining, no fill material observed | | | | | | |

| | |
|---|---|
| PROJECT: **Grayson Power Plant - Phase II ESA**<br>LOCATION: **800 Airway, Glendale, CA**<br>PROJECT NUMBER: **2057123300** | WELL / PROBEHOLE / BOREHOLE NO:<br>**SB-7** PAGE 2 OF 2 |
| DRILLING: STARTED: **4/27/2016** COMPLETED: **4/27/2016**<br>INSTALLATION: STARTED: **4/27/2016** COMPLETED: **4/27/2016**<br>DRILLING COMPANY: **Core Probe International**<br>DRILLING EQUIPMENT: **Geo Probe 7822 DT**<br>DRILLING METHOD: **Direct Push**<br>SAMPLING EQUIPMENT: **Acetate Liners/Terracores/Jars** | NORTHING (ft): EASTING (ft):<br>LATITUDE: LONGITUDE:<br>GROUND ELEV (ft): TOC ELEV (ft):<br>INITIAL DTW (ft): **NE** BOREHOLE DEPTH (ft): **40.0**<br>STATIC DTW (ft): **NE** WELL DEPTH (ft): **NA**<br>WELL CASING DIAMETER (in): **NA** BOREHOLE DIAMETER (in): **2.25**<br>LOGGED BY: **J. Sargent** CHECKED BY: **A. Sawant** |

| Time & Depth (feet) | Graphic Log | USCS | Description | Sample | Time Sample ID | Measured Recov. (feet) | Blow Count/ft | Headspace PID (ppm) | Depth (feet) |
|---|---|---|---|---|---|---|---|---|---|
| | | SM | | | -- -- | | | 0.3 | |
| 25 | | | | | | | | | 25 |
| | | ML | ML; Sandy SILT, olive brown (2.5Y 4/4), some fine-grained sand, non-plastic fines, moist, no HC odor, no staining | | | | | | |
| | | SM | SM; Silty SAND, light olive brown (2.5Y 5/3), fine-grained sand, some fines, moist, no HC odor, no staining | | -- -- | | | 0.3 | |
| 30 | | | | | | | | | 30 |
| 35 | | SP-SM | SP-SM; Poorly Graded SAND with Silt, light yellowish brown (2.5Y 6/4), fine-grained sand, little fines, moist, no HC odor, no staining | | 1350 SB-7-35 | | | 0.2 | 35 |
| | | SM | SM; Silty SAND, light olive brown (2.5Y 5/3), fine-grained sand, some fines, moist, no HC odor, no staining | | -- -- | | | 0.2 | |
| 40 | | | Borehole terminated at 40 feet bgs. | | | | | | 40 |

PROJECT: **Grayson Power Plant - Phase II ESA**
LOCATION: **800 Airway, Glendale, CA**
PROJECT NUMBER: **2057123300**

WELL / PROBEHOLE / BOREHOLE NO: **SB-8** PAGE 1 OF 2

Stantec

DRILLING: STARTED: **4/27/2016** COMPLETED: **4/27/2016**
INSTALLATION: STARTED: **4/27/2016** COMPLETED: **4/27/2016**
DRILLING COMPANY: **Core Probe International**
DRILLING EQUIPMENT: **Geo Probe 7822 DT**
DRILLING METHOD: **Direct Push**
SAMPLING EQUIPMENT: **Acetate Liners/Terracores/Jars**

NORTHING (ft):
EASTING (ft):
LATITUDE:
LONGITUDE:
GROUND ELEV (ft):
TOC ELEV (ft):
INITIAL DTW (ft): **NE**
BOREHOLE DEPTH (ft): **40.0**
STATIC DTW (ft): **NE**
WELL DEPTH (ft): **NA**
WELL CASING DIAMETER (in): **NA**
BOREHOLE DIAMETER (in): **2.25**
LOGGED BY: **J. Sargent**
CHECKED BY: **A. Sawant**

| Time & Depth (feet) | Graphic Log | USCS | Description | Sample | Time Sample ID | Measured Recov. (feet) | Blow Count/ft | Headspace PID (ppm) | Depth (feet) | Well Construction |
|---|---|---|---|---|---|---|---|---|---|---|
| | | | 4" Asphalt | | | | | | | |
| | | SM | SM; Silty SAND, dark grayish brown (2.5Y 4/2), fine to med.-grained sand, some fines, wet (boring is adjacent to cooling water pond), no hydrocarbon (HC) odor, no staining | ■ | 0837 SB-8-1 | | | 0.3 | | Bentonite grout |
| | | | | | -- -- | | | 1.3 | | Bentonite chips; #3 sand |
| 5 | | | Same as above, trace fine gravel | | | | | | 5 | 10" Stainless steel vapor implant |
| | | | | | -- -- | | | 9.6 | | |
| 10 | | | Same as above, varying percentage of fine-grained sand from trace to little, moist | | | | | | 10 | Bentonite grout |
| | | | | | -- -- | | | 10.2 | | Bentonite chips; #3 sand |
| 15 | | | | | | | | | 15 | 10" Stainless steel vapor implant; #3 sand |
| | | | | ■ | 0924 SB-8-20 | | | 15.8 | | |
| 20 | | | | | | | | | 20 | |

| | |
|---|---|
| PROJECT: **Grayson Power Plant - Phase II ESA**<br>LOCATION: **800 Airway, Glendale, CA**<br>PROJECT NUMBER: **2057123300** | WELL / PROBEHOLE / BOREHOLE NO:<br>**SB-8** PAGE 2 OF 2 |
| DRILLING: STARTED: **4/27/2016** COMPLETED: **4/27/2016**<br>INSTALLATION: STARTED: **4/27/2016** COMPLETED: **4/27/2016**<br>DRILLING COMPANY: **Core Probe International**<br>DRILLING EQUIPMENT: **Geo Probe 7822 DT**<br>DRILLING METHOD: **Direct Push**<br>SAMPLING EQUIPMENT: **Acetate Liners/Terracores/Jars** | NORTHING (ft): EASTING (ft):<br>LATITUDE: LONGITUDE:<br>GROUND ELEV (ft): TOC ELEV (ft):<br>INITIAL DTW (ft): **NE** BOREHOLE DEPTH (ft): **40.0**<br>STATIC DTW (ft): **NE** WELL DEPTH (ft): **NA**<br>WELL CASING DIAMETER (in): **NA** BOREHOLE DIAMETER (in): **2.25**<br>LOGGED BY: **J. Sargent** CHECKED BY: **A. Sawant** |

| Time & Depth (feet) | Graphic Log | USCS | Description | Sample | Time Sample ID | Measured Recov. (feet) | Blow Count/ft | Headspace PID (ppm) | Depth (feet) | Well Construction |
|---|---|---|---|---|---|---|---|---|---|---|
| | | SM | SM; Silty SAND with Gravel, brown (10YR 4/3), some fine to coarse gravel, med. to coarse-grained sand, some fines, moist, no HC odor, no staining | | | | | | | Bentonite grout |
| 25 | | SW-SM | SW-SM; Well Graded SAND with Silt, light olive brown (12.5Y 5/3), fine to coarse-grained sand, trace fine gravel, little fines, moist<br>At 24.5' bgs, strong HC odor, some HC staining | | 0925<br>SB-8-25 | | | 136 | 25 | |
| | | SP-SM | SP-SM; Poorly Graded SAND, light olive brown (2.5Y 5/4), fine-grained sand, little fines, moist, no HC odor, no staining | | | | | | | |
| | | ML | ML; Sandy SILT, brown (10YR 4/3), some very fine-grained sand, non to low plasticity fines, moist, no HC odor, no staining | | | | | | | Bentonite chips<br>#3 sand |
| 30 | | SM | SM; Silty SAND, brown (10YR 4/3), fine to med.-grained sand, some fines, moist, no HC odor, no staining | | --<br>-- | | | 12.7 | 30 | 10" Stainless steel vapor implant |
| 35 | | | Becomes light olive brown (2.5Y 5/4), fine to med.-grained sand, trace fine gravel | | --<br>-- | | | 3.2 | 35 | |
| | | | Increase in gravel | | | | | | | |
| 40 | | | Borehole terminated at 40 feet bgs. | | 0944<br>SB-8-40 | | | 10.8 | 40 | |

| | |
|---|---|
| PROJECT: **Grayson Power Plant - Phase II ESA**<br>LOCATION: **800 Airway, Glendale, CA**<br>PROJECT NUMBER: **2057123300** | WELL / PROBEHOLE / BOREHOLE NO:<br>**SB-9** PAGE 1 OF 3 |
| DRILLING: STARTED: **4/28/2016** COMPLETED: **4/28/2016**<br>INSTALLATION: STARTED: **4/28/2016** COMPLETED: **4/28/2016**<br>DRILLING COMPANY: **Core Probe International**<br>DRILLING EQUIPMENT: **Geo Probe 7822 DT**<br>DRILLING METHOD: **Direct Push**<br>SAMPLING EQUIPMENT: **Acetate Liners/Terracores/Jars** | NORTHING (ft): EASTING (ft):<br>LATITUDE: LONGITUDE:<br>GROUND ELEV (ft): TOC ELEV (ft):<br>INITIAL DTW (ft): **41** BOREHOLE DEPTH (ft): **50.0**<br>STATIC DTW (ft): **42.67** WELL DEPTH (ft): **NA**<br>WELL CASING DIAMETER (in): **NA** BOREHOLE DIAMETER (in): **2.25**<br>LOGGED BY: **J. Sargent** CHECKED BY: **A. Sawant** |

| Time & Depth (feet) | Graphic Log | USCS | Description | Sample | Time Sample ID | Measured Recov. (feet) | Blow Count/ft | Headspace PID (ppm) | Depth (feet) |
|---|---|---|---|---|---|---|---|---|---|
| | | | 4" Asphalt | | | | | | |
| | | SM | SM; Silty SAND with Gravel; very dark brown (10YR 2/2), some fine to coarse-grained sand, some fine to coarse gravel, some asphalt fragments, no HC odor, no staining | | 1131 SB-9-1 | | | 0.6 | |
| 5 | | | | | 1145 SB-9-5 | | | 1.3 | 5 |
| | | | Color change to dark yellowish brown (10YR 4/4) | | | | | | |
| | | | Asphalt fragments, appears to be fill, non-native | | | | | | |
| 10 | | | | | 1150 SB-9-10 | | | 1.8 | 10 |
| 15 | | | No recovery, very hard drilling, many rocks observed, sample liner melted | | -- -- | | | 1.2 | 15 |
| 20 | | | At 20' bgs, native | | | | | | 20 |
| | | SP-SM | SP-SM; Poorly Graded SAND with Silt, brown (10YR 5/3), fine-grained sand, trace coarse-grained sand, little fines, moist, no asphalt fragments, no HC odor, no staining, appears native | | | | | | |

GEO FORM 304_SECOR037 20160602_GINT_GRAYSON_SB-1_THROUGH_SB-16.GPJ SECOR037.GDT 6/9/16

| | |
|---|---|
| PROJECT: **Grayson Power Plant - Phase II ESA**<br>LOCATION: **800 Airway, Glendale, CA**<br>PROJECT NUMBER: **2057123300** | WELL / PROBEHOLE / BOREHOLE NO:<br>**SB-9** PAGE 2 OF 3 |
| DRILLING: STARTED: **4/28/2016** COMPLETED: **4/28/2016**<br>INSTALLATION: STARTED: **4/28/2016** COMPLETED: **4/28/2016**<br>DRILLING COMPANY: **Core Probe International**<br>DRILLING EQUIPMENT: **Geo Probe 7822 DT**<br>DRILLING METHOD: **Direct Push**<br>SAMPLING EQUIPMENT: **Acetate Liners/Terracores/Jars** | NORTHING (ft): EASTING (ft):<br>LATITUDE: LONGITUDE:<br>GROUND ELEV (ft): TOC ELEV (ft):<br>INITIAL DTW (ft): **41** BOREHOLE DEPTH (ft): **50.0**<br>STATIC DTW (ft): **42.67** WELL DEPTH (ft): **NA**<br>WELL CASING DIAMETER (in): **NA** BOREHOLE DIAMETER (in): **2.25**<br>LOGGED BY: **J. Sargent** CHECKED BY: **A. Sawant** |

| Time & Depth (feet) | Graphic Log | USCS | Description | Sample | Time Sample ID | Measured Recov. (feet) | Blow Count/ft | Headspace PID (ppm) | Depth (feet) |
|---|---|---|---|---|---|---|---|---|---|
| | | SP-SM | | | | | | | |
| | | | | | 1210 SB-9-25 | | | 0.3 | |
| 25 | | | | | | | | | 25 |
| | | | | | -- -- | | | 0.5 | |
| 30 | | | | | | | | | 30 |
| | | | | | -- -- | | | 0.3 | |
| 35 | | | | | | | | | 35 |
| | | SC | SC; Clayey SAND, dark yellowish brown (10YR 3/4), fine to med.-grained sand, some fines, moist, no HC odor, no staining | | | | | | |
| | | | | | -- -- | | | 0.3 | |
| 40 | | SM | SM; Silty SAND, dark yellowish brown (10YR 3/4), fine to med.-grained sand, some fines, moist, no HC odor, no staining | | | | | | 40 |
| | | | | | 1244 SB-9-GW | | | | |
| | | CL | CL; Lean CLAY, brown (10YR 4/4), trace fine-grained sand, low | | | | | | |

| | |
|---|---|
| PROJECT: **Grayson Power Plant - Phase II ESA**<br>LOCATION: **800 Airway, Glendale, CA**<br>PROJECT NUMBER: **2057123300** | WELL / PROBEHOLE / BOREHOLE NO:<br>**SB-9** PAGE 3 OF 3 |
| DRILLING: STARTED: **4/28/2016** COMPLETED: **4/28/2016**<br>INSTALLATION: STARTED: **4/28/2016** COMPLETED: **4/28/2016**<br>DRILLING COMPANY: **Core Probe International**<br>DRILLING EQUIPMENT: **Geo Probe 7822 DT**<br>DRILLING METHOD: **Direct Push**<br>SAMPLING EQUIPMENT: **Acetate Liners/Terracores/Jars** | NORTHING (ft): EASTING (ft):<br>LATITUDE: LONGITUDE:<br>GROUND ELEV (ft): TOC ELEV (ft):<br>INITIAL DTW (ft): **41** BOREHOLE DEPTH (ft): **50.0**<br>STATIC DTW (ft): **42.67** WELL DEPTH (ft): **NA**<br>WELL CASING DIAMETER (in): **NA** BOREHOLE DIAMETER (in): **2.25**<br>LOGGED BY: **J. Sargent** CHECKED BY: **A. Sawant** |

| Time & Depth (feet) | Graphic Log | USCS | Description | Sample | Time Sample ID | Measured Recov. (feet) | Blow Count/ft | Headspace PID (ppm) | Depth (feet) |
|---|---|---|---|---|---|---|---|---|---|
| | | CL | plasticity fines, wet, no HC odor, no staining | | | | | | |
| 45 | | SM | SM; Silty SAND, dark brown (7.5YR 3/4), heaving sands, fine to med.-grained sand, some fines, wet, no HC odor, no staining | | | | | | 45 |
| | | CL | CL; Lean CLAY, dark brown (10YR 4/3), some fine-grained sand, med. plasticity fines, wet, no HC odor, no staining | | | | | | |
| | | SW-SM | SW-SM; Well Graded SAND with Silt, brown (10YR 4/3), fine to coarse-grained sand, some fines, wet, no HC odor, no staining | | | | | | |
| 50 | | | Borehole terminated at 50 feet bgs. | | | | | | 50 |
| 55 | | | | | | | | | 55 |
| 60 | | | | | | | | | 60 |
| 65 | | | | | | | | | 65 |

| | |
|---|---|
| PROJECT: **Grayson Power Plant - Phase II ESA**<br>LOCATION: **800 Airway, Glendale, CA**<br>PROJECT NUMBER: **2057123300** | WELL / PROBEHOLE / BOREHOLE NO:<br>**SB-1** PAGE 1 OF 2 |
| DRILLING: STARTED: **4/29/2016** COMPLETED: **4/29/2016**<br>INSTALLATION: STARTED: **4/29/2016** COMPLETED: **4/29/2016**<br>DRILLING COMPANY: **Core Probe International**<br>DRILLING EQUIPMENT: **Geo Probe 7822 DT**<br>DRILLING METHOD: **HA/Direct Push**<br>SAMPLING EQUIPMENT: **Acetate Liners/Terracores/Jars** | NORTHING (ft): EASTING (ft):<br>LATITUDE: LONGITUDE:<br>GROUND ELEV (ft): TOC ELEV (ft):<br>INITIAL DTW (ft): **NE** BOREHOLE DEPTH (ft): **40.0**<br>STATIC DTW (ft): **NE** WELL DEPTH (ft): **NA**<br>WELL CASING DIAMETER (in): **NA** BOREHOLE DIAMETER (in): **2.25**<br>LOGGED BY: **J. Sargent** CHECKED BY: **A. Sawant** |

| Time & Depth (feet) | Graphic Log | USCS | Description | Sample | Time Sample ID | Measured Recov. (feet) | Blow Count/ft | Headspace PID (ppm) | Depth (feet) |
|---|---|---|---|---|---|---|---|---|---|
| | | | 4" Asphalt | | | | | | |
| | | SM | SM; Silty SAND; very dark grayish brown (2.5Y 3/2), little fine gravel, fine to coarse-grained sand, some fines, moist, asphalt fragments, faint hydrocarbon (HC) odor, some dark staining | | 0915 SB-1-1 | | | 0.9 | |
| | | | Intermitent asphalt and black staining from 3' to 10' | | | | | | |
| 5 | | | Dark staining | | 0944 SB-1-5 | | | 39.7 | 5 |
| 10 | | | Dark staining | | 0948 SB-1-10 | | | 8.6 | 10 |
| | | | Color change to dark yellowish brown (10YR 4/4), no staining | | | | | | |
| 15 | | | Fine-grained sand, olive brown (2.5Y 4/4), increase in fines | | | | | | 15 |
| 20 | | | Same as above | | -- -- | | | 0.0 | 20 |

GEO FORM 304_SECOR037_20160602_GINT_GRAYSON_SB-1_THROUGH_SB-16.GPJ SECOR037.GDT 6/9/16

| | |
|---|---|
| PROJECT: **Grayson Power Plant - Phase II ESA**<br>LOCATION: **800 Airway, Glendale, CA**<br>PROJECT NUMBER: **2057123300** | WELL / PROBEHOLE / BOREHOLE NO:<br>**SB-1** PAGE 2 OF 2 |
| DRILLING: STARTED: **4/29/2016** COMPLETED: **4/29/2016**<br>INSTALLATION: STARTED: **4/29/2016** COMPLETED: **4/29/2016**<br>DRILLING COMPANY: **Core Probe International**<br>DRILLING EQUIPMENT: **Geo Probe 7822 DT**<br>DRILLING METHOD: **HA/Direct Push**<br>SAMPLING EQUIPMENT: **Acetate Liners/Terracores/Jars** | NORTHING (ft): EASTING (ft):<br>LATITUDE: LONGITUDE:<br>GROUND ELEV (ft): TOC ELEV (ft):<br>INITIAL DTW (ft): **NE** BOREHOLE DEPTH (ft): **40.0**<br>STATIC DTW (ft): **NE** WELL DEPTH (ft): **NA**<br>WELL CASING DIAMETER (in): **NA** BOREHOLE DIAMETER (in): **2.25**<br>LOGGED BY: **J. Sargent** CHECKED BY: **A. Sawant** |

| Time & Depth (feet) | Graphic Log | USCS | Description | Sample | Time Sample ID | Measured Recov. (feet) | Blow Count/ft | Headspace PID (ppm) | Depth (feet) |
|---|---|---|---|---|---|---|---|---|---|
| | | SM | | | | | | | |
| 25 | | | Increase in fines | | -- -- | | | 0.0 | 25 |
| 30 | | | | | -- -- | | | 0.0 | 30 |
| | | ML | ML; Sandy SILT, olive brown (4/3 2.5Y), some sand, non-plastic fines, wet (perched) | | | | | | |
| | | SM | SM; Silty SAND, olive brown (4/3 2.5Y), fine-grained sand, non-plastic fines, no HC odor, no staining | | | | | | |
| 35 | | | | | -- -- | | | 0.0 | 35 |
| | | ML | ML; Sandy SILT, olive brown (4/3 2.5Y), some sand, non-plastic fines | | | | | | |
| | | SM | SM; Silty SAND, olive brown (4/3 2.5Y), fine-grained sand, non-plastic fines, no HC odor, no staining | | | | | | |
| | | | | | - - | | | 0.0 | |
| 40 | | | Borehole terminated at 40 feet bgs. | | | | | | 40 |

| | |
|---|---|
| PROJECT: **Grayson Power Plant - Phase II ESA**<br>LOCATION: **800 Airway, Glendale, CA**<br>PROJECT NUMBER: **2057123300** | WELL / PROBEHOLE / BOREHOLE NO:<br>**SB-2** PAGE 1 OF 2 |
| DRILLING: STARTED: **4/29/2016** COMPLETED: **4/29/2016**<br>INSTALLATION: STARTED: **4/29/2016** COMPLETED: **4/29/2016**<br>DRILLING COMPANY: **Core Probe International**<br>DRILLING EQUIPMENT: **Geo Probe 7822 DT**<br>DRILLING METHOD: **HA/Direct Push**<br>SAMPLING EQUIPMENT: **Acetate Liners/Terracores/Jars** | NORTHING (ft): EASTING (ft):<br>LATITUDE: LONGITUDE:<br>GROUND ELEV (ft): TOC ELEV (ft):<br>INITIAL DTW (ft): **NE** BOREHOLE DEPTH (ft): **40.0**<br>STATIC DTW (ft): **NE** WELL DEPTH (ft): **NA**<br>WELL CASING DIAMETER (in): **NA** BOREHOLE DIAMETER (in): **2.25**<br>LOGGED BY: **J. Sargent** CHECKED BY: **A. Sawant** |

| Time & Depth (feet) | Graphic Log | USCS | Description | Sample | Time Sample ID | Measured Recov. (feet) | Blow Count/ft | Headspace PID (ppm) | Depth (feet) |
|---|---|---|---|---|---|---|---|---|---|
| | | | 4" Asphalt | | | | | | |
| | | SM | SM; Silty SAND, olive brown (2.5Y 4/2), fine-grained sand, some fines, moist, no hydrocarbon (HC) odor, no staining | | 0755 SB-2-1 | | | 0.0 | |
| 5 | | | Same as above | | -- -- | | | 0.0 | 5 |
| | | | Very dark grayish brown (10YR 3/2) | | | | | | |
| 10 | | | | | 0820 SB-2-10 | | | 0.1 | 10 |
| | | | Fine-grained sand, no gravel, increase in fines | | | | | | |
| 15 | | | | | | | | | 15 |
| 20 | | | | | 0825 SB-2-25 | | | 0.0 | 20 |
| | | | Olive brown (2.5Y 4/4), trace fine gravel | | | | | | |

| | |
|---|---|
| PROJECT: **Grayson Power Plant - Phase II ESA**<br>LOCATION: **800 Airway, Glendale, CA**<br>PROJECT NUMBER: **2057123300** | WELL / PROBEHOLE / BOREHOLE NO:<br>**SB-2** PAGE 2 OF 2 |
| DRILLING: STARTED: **4/29/2016** COMPLETED: **4/29/2016**<br>INSTALLATION: STARTED: **4/29/2016** COMPLETED: **4/29/2016**<br>DRILLING COMPANY: **Core Probe International**<br>DRILLING EQUIPMENT: **Geo Probe 7822 DT**<br>DRILLING METHOD: **HA/Direct Push**<br>SAMPLING EQUIPMENT: **Acetate Liners/Terracores/Jars** | NORTHING (ft): EASTING (ft):<br>LATITUDE: LONGITUDE:<br>GROUND ELEV (ft): TOC ELEV (ft):<br>INITIAL DTW (ft): **NE** BOREHOLE DEPTH (ft): **40.0**<br>STATIC DTW (ft): **NE** WELL DEPTH (ft): **NA**<br>WELL CASING DIAMETER (in): **NA** BOREHOLE DIAMETER (in): **2.25**<br>LOGGED BY: **J. Sargent** CHECKED BY: **A. Sawant** |

| Time & Depth (feet) | Graphic Log | USCS | Description | Sample | Time Sample ID | Measured Recov. (feet) | Blow Count/ft | Headspace PID (ppm) | Depth (feet) |
|---|---|---|---|---|---|---|---|---|---|
| | | SM | | | | | | | |
| | | ML | ML; Sandy SILT, olive brown (2.5Y 4/4), some very fine to fine-grained sand, non-plastic fines, moist, no HC odor, no staining | | | | | | |
| 25 | | | | | -- | | | 0.0 | 25 |
| | | SM | SM; Silty SAND, olive brown (2.5Y 4/4), fine-grained sand, some fines, moist, no HC odor, no staining | | | | | | |
| 30 | | | | | -- | | | 0.0 | 30 |
| | | SC | SC; Clayey SAND, olive brown (2.5Y 4/4), fine-grained sand, low to med, plasticity fines, wet (perched), no HC odor, no staining | | | | | | |
| | | SM | SM; Silty SAND, olive brown (2.5Y 4/4), fine-grained sand, some fines, moist, no HC odor, no staining | | | | | | |
| 35 | | | | | -- | | | 0.0 | 35 |
| | | SC | SC; Clayey SAND, olive brown (2.5Y 4/4), fine-grained sand, low to med, plasticity fines, wet (perched), no HC odor, no staining | | | | | | |
| | | SM | SM; Silty SAND, olive brown (2.5Y 4/4), fine-grained sand, some fines, moist, no HC odor, no staining | | | | | | |
| | | | | | -- | | | 0.0 | |
| 40 | | | Borehole terminated at 40 feet bgs. | | | | | | 40 |

| | |
|---|---|
| PROJECT: **Grayson Power Plant - Phase II ESA**<br>LOCATION: **800 Airway, Glendale, CA**<br>PROJECT NUMBER: **2057123300** | WELL / PROBEHOLE / BOREHOLE NO:<br>**SB-3** PAGE 1 OF 3 |
| DRILLING: STARTED: **4/28/2016** COMPLETED: **4/28/2016**<br>INSTALLATION: STARTED: **4/28/2016** COMPLETED: **4/28/2016**<br>DRILLING COMPANY: **Core Probe International**<br>DRILLING EQUIPMENT: **Geo Probe 7822 DT**<br>DRILLING METHOD: **HA/Direct Push**<br>SAMPLING EQUIPMENT: **Acetate Liners/Terracores/Jars** | NORTHING (ft): EASTING (ft):<br>LATITUDE: LONGITUDE:<br>GROUND ELEV (ft): TOC ELEV (ft):<br>INITIAL DTW (ft): **44** BOREHOLE DEPTH (ft): **50.0**<br>STATIC DTW (ft): **46.3** WELL DEPTH (ft): **NA**<br>WELL CASING DIAMETER (in): **NA** BOREHOLE DIAMETER (in): **2.25**<br>LOGGED BY: **J. Sargent** CHECKED BY: **A. Sawant** |

| Time & Depth (feet) | Graphic Log | USCS | Description | Sample | Time Sample ID | Measured Recov. (feet) | Blow Count/ft | Headspace PID (ppm) | Depth (feet) |
|---|---|---|---|---|---|---|---|---|---|
| | | | 3" Asphalt | | | | | | |
| | | SM | SM; Silty SAND, brown (7.5YR 4/3), trace fine gravel, fine to coarse-grained sand, some fines, wet (adjacent to cooling tower pond) | | 0643<br>SB-3-1 | | | 0.9 | |
| 5 | | | Same as above, slight increase in gravel | | -- | | | 0.0 | 5 |
| 10 | | | Same as above | | -- | | | 1.0 | 10 |
| 15 | | | Same as above, fine to medium-grained sand, no gravel, increase in fines | | -- | | | 1.2 | 15 |
| | | ML | ML; Sandy SILT, dark yellowish brown (10YR 4/4), some fine-graine sand, med. to low plasticity fines, moist, no HC odor, no staining | | | | | | |
| 20 | | SM | SM; Silty SAND, dark yellowish brown (10YR 4/4), fine to med.-grained sand, moist, no HC odor, no staining | | -- | | | 1.5 | 20 |

GEO FORM 304_SECOR037 20160602_GINT_GRAYSON_SB-1_THROUGH_SB-16.GPJ SECOR037.GDT 6/9/16

| | |
|---|---|
| PROJECT: **Grayson Power Plant - Phase II ESA**<br>LOCATION: **800 Airway, Glendale, CA**<br>PROJECT NUMBER: **2057123300** | WELL / PROBEHOLE / BOREHOLE NO:<br>**SB-3** PAGE 2 OF 3 |
| DRILLING: STARTED: **4/28/2016** COMPLETED: **4/28/2016**<br>INSTALLATION: STARTED: **4/28/2016** COMPLETED: **4/28/2016**<br>DRILLING COMPANY: **Core Probe International**<br>DRILLING EQUIPMENT: **Geo Probe 7822 DT**<br>DRILLING METHOD: **HA/Direct Push**<br>SAMPLING EQUIPMENT: **Acetate Liners/Terracores/Jars** | NORTHING (ft): EASTING (ft):<br>LATITUDE: LONGITUDE:<br>GROUND ELEV (ft): TOC ELEV (ft):<br>INITIAL DTW (ft): **44** BOREHOLE DEPTH (ft): **50.0**<br>STATIC DTW (ft): **46.3** WELL DEPTH (ft): **NA**<br>WELL CASING DIAMETER (in): **NA** BOREHOLE DIAMETER (in): **2.25**<br>LOGGED BY: **J. Sargent** CHECKED BY: **A. Sawant** |

| Time & Depth (feet) | Graphic Log | USCS | Description | Sample | Time Sample ID | Measured Recov. (feet) | Blow Count/ft | Headspace PID (ppm) | Depth (feet) |
|---|---|---|---|---|---|---|---|---|---|
| | | SW-SM | SW-SM; Well graded SAND with Silt, light olive brown (2.5Y 5/4), fine to coarse-grained sand, little fines, moist, no HC odor, no staining | | | | | | |
| | | SM | SM; Silty SAND, olive brown (2.5Y 4/4), fine-grained sand, some fines, moist, no HC odor, no staining | | -- -- | | | 0.7 | |
| 25 | | | | | | | | | 25 |
| | | CL | CL; Lean CLAY with Sand, olive brown (2.5Y 4/4), little fine-grained sand, med. to high plasticity fines, wet (perched), no HC odor, no staining | | | | | | |
| | | SM | SM; Silty SAND, olive brown (2.5Y 4/3), fine to medium-grained sand, some fines, moist, no HC odor, no staining | | -- -- | | | 1.6 | |
| 30 | | | | | | | | | 30 |
| | | SP-SM | SP-SM; Poorly Graded SAND with Silt, light olive brown (2.5Y 5/3), fine-grained sand, little fines, moist, no HC odor, no staining | | | | | | |
| 35 | | | | | 0709 SB-3-35 | | | 2.2 | 35 |
| | | CL | CL; Interbedded Lean CLAY with Sand, and poorly graded SAND with Silt, olive brown (2.5Y 4/4) | | | | | | |
| | | CL | CL; Some sand | | | | | | |
| | | SP | SP; Fine-grained SAND, little fines, mist | | | | | | |
| | | SC | SC; Clayey SAND, dark olive gray (5Y 3/2), fine to coarse-grained sand, some med. plasticity fines, wet, no HC odor, no staining | | | | | | |
| 40 | | | | | 0712 SB-3-40 | | | 1.7 | 40 |
| | | SM | Same as above, fine to coarse-grained sand<br>SM; Silty SAND, olive (5Y 5/3), very fine-grained sand, some fines, moist, no HC odor, no staining | | | | | | |

GEO FORM 304_SECOR037 20160602_GINT_GRAYSON_SB-1_THROUGH_SB-16.GPJ SECOR037.GDT 6/9/16

| | |
|---|---|
| PROJECT: **Grayson Power Plant - Phase II ESA**<br>LOCATION: **800 Airway, Glendale, CA**<br>PROJECT NUMBER: **2057123300** | WELL / PROBEHOLE / BOREHOLE NO:<br>**SB-3** PAGE 3 OF 3 |
| DRILLING: STARTED: **4/28/2016** COMPLETED: **4/28/2016**<br>INSTALLATION: STARTED: **4/28/2016** COMPLETED: **4/28/2016**<br>DRILLING COMPANY: **Core Probe International**<br>DRILLING EQUIPMENT: **Geo Probe 7822 DT**<br>DRILLING METHOD: **HA/Direct Push**<br>SAMPLING EQUIPMENT: **Acetate Liners/Terracores/Jars** | NORTHING (ft): EASTING (ft):<br>LATITUDE: LONGITUDE:<br>GROUND ELEV (ft): TOC ELEV (ft):<br>INITIAL DTW (ft): **44** BOREHOLE DEPTH (ft): **50.0**<br>STATIC DTW (ft): **46.3** WELL DEPTH (ft): **NA**<br>WELL CASING DIAMETER (in): **NA** BOREHOLE DIAMETER (in): **2.25**<br>LOGGED BY: **J. Sargent** CHECKED BY: **A. Sawant** |

| Time & Depth (feet) | Graphic Log | USCS | Description | Sample | Time Sample ID | Measured Recov. (feet) | Blow Count/ft | Headspace PID (ppm) | Depth (feet) |
|---|---|---|---|---|---|---|---|---|---|
| 45 | | SM | | | 0743 SB-3-GW | | | 0.0 | 45 |
| | | | Same as above, trace fine to coarse gravel | | | | | | |
| 50 | | | Borehole terminated at 50 feet bgs. | | | | | | 50 |
| 55 | | | | | | | | | 55 |
| 60 | | | | | | | | | 60 |
| 65 | | | | | | | | | 65 |

GEO FORM 304_SECOR037 20160602_GINT_GRAYSON_SB-1_THROUGH_SB-16.GPJ SECOR037.GDT 6/9/16

| | |
|---|---|
| PROJECT: **Grayson Power Plant - Phase II ESA**<br>LOCATION: **800 Airway, Glendale, CA**<br>PROJECT NUMBER: **2057123300** | WELL / PROBEHOLE / BOREHOLE NO:<br>**SB-4** PAGE 1 OF 2 |
| DRILLING: STARTED: **4/29/2016** COMPLETED: **4/29/2016**<br>INSTALLATION: STARTED: **4/29/2016** COMPLETED: **4/29/2016**<br>DRILLING COMPANY: **Core Probe International**<br>DRILLING EQUIPMENT: **Geo Probe 7822 DT**<br>DRILLING METHOD: **Direct Push**<br>SAMPLING EQUIPMENT: **Acetate Liners/Terracores/Jars** | NORTHING (ft): EASTING (ft):<br>LATITUDE: LONGITUDE:<br>GROUND ELEV (ft): TOC ELEV (ft):<br>INITIAL DTW (ft): **NE** BOREHOLE DEPTH (ft): **40.0**<br>STATIC DTW (ft): **NE** WELL DEPTH (ft): **NA**<br>WELL CASING DIAMETER (in): **NA** BOREHOLE DIAMETER (in): **2.25**<br>LOGGED BY: **J. Sargent** CHECKED BY: **A. Sawant** |

| Time & Depth (feet) | Graphic Log | USCS | Description | Sample | Time Sample ID | Measured Recov. (feet) | Blow Count/ft | Headspace PID (ppm) | Depth (feet) |
|---|---|---|---|---|---|---|---|---|---|
| | | | 4" Asphalt | | | | | | |
| | | SM | SM; Silty SAND, dark yellowish brown (10YR 4/4), fine to coarse-grained sand, some fines, wet (adjacent to cooling tower pond), no hydrocarbon (HC) odor, no staining | ■ ■ | 0820 SB-4-1 | | | 0.0 | |
| 5 | | | Same as above | | -- -- | | | 0.0 | 5 |
| | | | Color change to dark brown (10YR 3/3), minor brick and asphalt fragments | | | | | | |
| 10 | | | Minor brick and asphalt fragments | ■ ■ | 0858 SB-4-10 | | | 0.0 | 10 |
| | | | Large rock at 11.5' bgs<br>Same as above | | | | | | |
| | | | Color change to dark yellowish brown (10YR 4/6) | | | | | | |
| 15 | | | Same as above, trace coarse gravel | | -- -- | | | 0.0 | 15 |
| 20 | | | Same as above, fine to med.-grained sand, no gravel | ■ ■ | 0904 SB-4-20 | | | 1.5 | 20 |

| | |
|---|---|
| PROJECT: **Grayson Power Plant - Phase II ESA**<br>LOCATION: **800 Airway, Glendale, CA**<br>PROJECT NUMBER: **2057123300** | WELL / PROBEHOLE / BOREHOLE NO:<br>**SB-4** PAGE 2 OF 2 |
| DRILLING: STARTED: **4/29/2016** COMPLETED: **4/29/2016**<br>INSTALLATION: STARTED: **4/29/2016** COMPLETED: **4/29/2016**<br>DRILLING COMPANY: **Core Probe International**<br>DRILLING EQUIPMENT: **Geo Probe 7822 DT**<br>DRILLING METHOD: **Direct Push**<br>SAMPLING EQUIPMENT: **Acetate Liners/Terracores/Jars** | NORTHING (ft): EASTING (ft):<br>LATITUDE: LONGITUDE:<br>GROUND ELEV (ft): TOC ELEV (ft):<br>INITIAL DTW (ft): **NE** BOREHOLE DEPTH (ft): **40.0**<br>STATIC DTW (ft): **NE** WELL DEPTH (ft): **NA**<br>WELL CASING DIAMETER (in): **NA** BOREHOLE DIAMETER (in): **2.25**<br>LOGGED BY: **J. Sargent** CHECKED BY: **A. Sawant** |

| Time & Depth (feet) | Graphic Log | USCS | Description | Sample | Time Sample ID | Measured Recov. (feet) | Blow Count/ft | Headspace PID (ppm) | Depth (feet) |
|---|---|---|---|---|---|---|---|---|---|
| | | SM | | | | | | | |
| | | | | | -- -- | | | 0.1 | |
| 25 | | | Same as above, fine-grained sand | | | | | | 25 |
| | | | | | -- -- | | | 0.0 | |
| 30 | | ML | Same as above<br>ML; Sandy SILT, olive brown (2.5Y 4/6), some fine-grained sand, non-plastic fines, moist, no HC odor, no staining | | | | | | 30 |
| | | SM | SM; Silty SAND, light olive brown (2.5Y 5/3), fine-grained sand, some fines, moist, no HC odor or staining | | | | | | |
| 35 | | | | ■ | -- -- | | | 0.1 | 35 |
| | | ML | ML; Sandy SILT, olive brown (2.5Y 4/6), some fine-grained sand, non-plastic fines, moist, no HC odor, no staining | | | | | | |
| | | SM | SM; Silty SAND, light olive brown (2.5Y 5/3), fine-grained sand, some fines, moist, no HC odor or staining | | | | | | |
| 40 | | | Borehole terminated at 40 feet bgs. | | | | | | 40 |

| | |
|---|---|
| PROJECT: **Grayson Power Plant - Phase II ESA**<br>LOCATION: **800 Airway, Glendale, CA**<br>PROJECT NUMBER: **2057123300** | WELL / PROBEHOLE / BOREHOLE NO:<br>**SB-5** PAGE 1 OF 3 |
| DRILLING: STARTED: **4/28/2016** COMPLETED: **4/28/2016**<br>INSTALLATION: STARTED: **4/28/2016** COMPLETED: **4/28/2016**<br>DRILLING COMPANY: **Core Probe International**<br>DRILLING EQUIPMENT: **Geo Probe 7822 DT**<br>DRILLING METHOD: **Direct Push**<br>SAMPLING EQUIPMENT: **Acetate Liners/Terracores/Jars** | NORTHING (ft): EASTING (ft):<br>LATITUDE: LONGITUDE:<br>GROUND ELEV (ft): TOC ELEV (ft):<br>INITIAL DTW (ft): **42** BOREHOLE DEPTH (ft): **50.0**<br>STATIC DTW (ft): **44.6** WELL DEPTH (ft): **NA**<br>WELL CASING DIAMETER (in): **NA** BOREHOLE DIAMETER (in): **2.25**<br>LOGGED BY: **J. Sargent** CHECKED BY: **A. Sawant** |

| Time & Depth (feet) | Graphic Log | USCS | Description | Sample | Time Sample ID | Measured Recov. (feet) | Blow Count/ft | Headspace PID (ppm) | Depth (feet) |
|---|---|---|---|---|---|---|---|---|---|
| | | | 4" Asphalt | | | | | | |
| | | SM | SM; Silty SAND with Gravel; dark olive brown (2.5Y 3/3), fine to coarse-grained sand, fine to coarse gravel, some fines, asphalt fragments abundant, moist, no hydrocarbon (HC) odor, no staining, appears to be fill material as noted by all debris | | 0826 SB-5-1 | | | 0.1 | |
| | | | Some glass fragments observed | | -- -- | | | 0.7 | |
| 5 | | | | | | | | | 5 |
| | | | Same as above, minor asphalt fragments observed | | | | | | |
| | | | Glass fragments observed | | 0840 SB-5-10 | | | 1.1 | |
| 10 | | | | | | | | | 10 |
| | | | Same as above | | | | | | |
| | | | Color change to olive brown (2.5Y 4/4) | | -- -- | | | 2.6 | |
| 15 | | | | | | | | | 15 |
| | | | Same as above, minor asphalt fragments observed | | 0848 SB-5-20 | | | 6.1 | |
| 20 | | | | | | | | | 20 |
| | | SM | SM; Silty SAND with Gravel, light olive brown (2.5Y 5/3), fine to coarse-grained sand, some fines, moist, fine to coarse gravel, no HC odor, no staining | | | | | | |

GEO FORM 304_SECOR037 20160602_GINT_GRAYSON_SB-1_THROUGH_SB-16.GPJ SECOR037.GDT 6/9/16

| | |
|---|---|
| PROJECT: **Grayson Power Plant - Phase II ESA**<br>LOCATION: **800 Airway, Glendale, CA**<br>PROJECT NUMBER: **2057123300** | WELL / PROBEHOLE / BOREHOLE NO:<br>**SB-5** PAGE 2 OF 3 |
| DRILLING: STARTED: **4/28/2016** COMPLETED: **4/28/2016**<br>INSTALLATION: STARTED: **4/28/2016** COMPLETED: **4/28/2016**<br>DRILLING COMPANY: **Core Probe International**<br>DRILLING EQUIPMENT: **Geo Probe 7822 DT**<br>DRILLING METHOD: **Direct Push**<br>SAMPLING EQUIPMENT: **Acetate Liners/Terracores/Jars** | NORTHING (ft): EASTING (ft):<br>LATITUDE: LONGITUDE:<br>GROUND ELEV (ft): TOC ELEV (ft):<br>INITIAL DTW (ft): **42** BOREHOLE DEPTH (ft): **50.0**<br>STATIC DTW (ft): **44.6** WELL DEPTH (ft): **NA**<br>WELL CASING DIAMETER (in): **NA** BOREHOLE DIAMETER (in): **2.25**<br>LOGGED BY: **J. Sargent** CHECKED BY: **A. Sawant** |

| Time & Depth (feet) | Graphic Log | USCS | Description | Sample | Time Sample ID | Measured Recov. (feet) | Blow Count/ft | Headspace PID (ppm) | Depth (feet) |
|---|---|---|---|---|---|---|---|---|---|
| | | SM | | | | | | | |
| | | | | | -- -- | | | 4.9 | |
| 25 | | | Same as above | | | | | | 25 |
| | | | Same as above | | 0857 SB-5-30 | | | 5.5 | |
| 30 | | | | | | | | | 30 |
| | | ML | ML; Sandy SILT, brown (7.5YR 4/3), some fine-graine sand, non-plastic fines, moist, slight oxidation, no HC odor, no staining | | | | | | |
| | | SW-SM | SW-SM; Well graded SAND with Silt, grayish brown (2.5Y 5/2), fine to coarse-grained sand, little fines, moist, no HC odor | | | | | | |
| | | | | | -- -- | | | 3.9 | |
| 35 | | | | | | | | | 35 |
| | | | Limited recovery | | | | | | |
| 40 | | | | | | | | | 40 |
| | | SM | SM; Silty SAND, very dark grayish brown (2.5Y 3/2), fine-grained sand, some fines, wet at 42' bgs, no HC odor, no staining | | 1110 SB-5-GW | | | | ▽ |

PROJECT: **Grayson Power Plant - Phase II ESA**
LOCATION: **800 Airway, Glendale, CA**
PROJECT NUMBER: **2057123300**

WELL / PROBEHOLE / BOREHOLE NO: **SB-5** PAGE 3 OF 3

Stantec

DRILLING: STARTED: **4/28/2016** COMPLETED: **4/28/2016**
INSTALLATION: STARTED: **4/28/2016** COMPLETED: **4/28/2016**
DRILLING COMPANY: **Core Probe International**
DRILLING EQUIPMENT: **Geo Probe 7822 DT**
DRILLING METHOD: **Direct Push**
SAMPLING EQUIPMENT: **Acetate Liners/Terracores/Jars**

NORTHING (ft):
EASTING (ft):
LATITUDE:
LONGITUDE:
GROUND ELEV (ft):
TOC ELEV (ft):
INITIAL DTW (ft): **42**
BOREHOLE DEPTH (ft): **50.0**
STATIC DTW (ft): **44.6**
WELL DEPTH (ft): **NA**
WELL CASING DIAMETER (in): **NA**
BOREHOLE DIAMETER (in): **2.25**
LOGGED BY: **J. Sargent**
CHECKED BY: **A. Sawant**

| Time & Depth (feet) | Graphic Log | USCS | Description | Sample | Time Sample ID | Measured Recov. (feet) | Blow Count/ft | Headspace PID (ppm) | Depth (feet) |
|---|---|---|---|---|---|---|---|---|---|
| 45 | | SM | Heaving sand conditions, sand entered drilling rods when refracting sampler | | | | | | 45 |
| | | | Well Graded SAND, olive (5Y 4/3), fine to coarse-grained sand, trace fines, wet, no HC odor, no staining | | | | | | |
| 50 | | | Borehole terminated at 50 feet bgs. | | | | | | 50 |
| 55 | | | | | | | | | 55 |
| 60 | | | | | | | | | 60 |
| 65 | | | | | | | | | 65 |

PROJECT: **Grayson Power Plant - Phase II ESA**
LOCATION: **800 Airway, Glendale, CA**
PROJECT NUMBER: **2057123300**

WELL / PROBEHOLE / BOREHOLE NO: **SB-6** PAGE 1 OF 2

Stantec

DRILLING: STARTED: **4/27/2016** COMPLETED: **4/27/2016**
INSTALLATION: STARTED: **4/27/2016** COMPLETED: **4/27/2016**
DRILLING COMPANY: **Core Probe International**
DRILLING EQUIPMENT: **Geo Probe 7822 DT**
DRILLING METHOD: **Direct Push**
SAMPLING EQUIPMENT: **Acetate Liners/Terracores/Jars**

NORTHING (ft): EASTING (ft):
LATITUDE: LONGITUDE:
GROUND ELEV (ft): TOC ELEV (ft):
INITIAL DTW (ft): **NE** BOREHOLE DEPTH (ft): **40.0**
STATIC DTW (ft): **NE** WELL DEPTH (ft): **NA**
WELL CASING DIAMETER (in): **NA** BOREHOLE DIAMETER (in): **2.25**
LOGGED BY: **J. Sargent** CHECKED BY: **A. Sawant**

| Time & Depth (feet) | Graphic Log | USCS | Description | Sample | Time Sample ID | Measured Recov. (feet) | Blow Count/ft | Headspace PID (ppm) | Depth (feet) | Well Construction |
|---|---|---|---|---|---|---|---|---|---|---|
| | | | 4" Asphalt | | | | | | | |
| | | SM | SM; Silty SAND with Gravel, brown (10YR 4/3), fine to coarse-grained sand, some fine to coarse gravel, some fines, wet (adjacent to cooling tower pond), no hydrocarbon (HC) odor, no staining | ■ | 1104 SB-6-1 | | | 0.2 | | Bentonite grout |
| | | | Refusal at 2.5' bgs, very large rocks, stepping out to south<br>Step out boring encountered conduit at 2.5' bgs | | | | | | | |
| | | | Wire, brick, glass, spark plug in upper 5' | | -- -- | | | 0.0 | | Bentonite chips<br>#3 sand |
| 5 | | | | | | | | | 5 | 10" Stainless steel vapor implant |
| | | | Minor screen staining observed | | | | | | | |
| | | | Asphalt fragments with glass observed | | | | | | | |
| | | | | ■ | 1240 SB-6-10 | | | 18.5 | | |
| 10 | | | Same as above, asphalt fragments observed | | | | | | 10 | Bentonite grout |
| | | | | ■ | 1242 SB-6-15 | | | 1.4 | | Bentonite chips<br>#3 sand |
| 15 | | | Slight staining from asphalt, glass fragments, fill material | | | | | | 15 | 10" Stainless steel vapor implant<br>#3 sand |
| | | SM | SM; Native, no debris, soil appears uniform and undisturbed. Silty SAND, brown (7.5YR 4/4), fine to med.-grained sand, some fines, moist, no HC odor, no staining | | -- -- | | | 1.8 | | |
| | | | | | -- -- | | | 1.7 | | |
| 20 | | | | | | | | | 20 | |

GEO FORM 304_SECOR037 20160602_GINT_GRAYSON_SB-1_THROUGH_SB-16.GPJ SECOR037.GDT 6/9/16

| | |
|---|---|
| PROJECT: **Grayson Power Plant - Phase II ESA**<br>LOCATION: **800 Airway, Glendale, CA**<br>PROJECT NUMBER: **2057123300** | WELL / PROBEHOLE / BOREHOLE NO:<br>**SB-6** PAGE 2 OF 2 |
| DRILLING: STARTED: **4/27/2016** COMPLETED: **4/27/2016**<br>INSTALLATION: STARTED: **4/27/2016** COMPLETED: **4/27/2016**<br>DRILLING COMPANY: **Core Probe International**<br>DRILLING EQUIPMENT: **Geo Probe 7822 DT**<br>DRILLING METHOD: **Direct Push**<br>SAMPLING EQUIPMENT: **Acetate Liners/Terracores/Jars** | NORTHING (ft): EASTING (ft):<br>LATITUDE: LONGITUDE:<br>GROUND ELEV (ft): TOC ELEV (ft):<br>INITIAL DTW (ft): **NE** BOREHOLE DEPTH (ft): **40.0**<br>STATIC DTW (ft): **NE** WELL DEPTH (ft): **NA**<br>WELL CASING DIAMETER (in): **NA** BOREHOLE DIAMETER (in): **2.25**<br>LOGGED BY: **J. Sargent** CHECKED BY: **A. Sawant** |

| Time & Depth (feet) | Graphic Log | USCS | Description | Sample | Time Sample ID | Measured Recov. (feet) | Blow Count/ft | Headspace PID (ppm) | Depth (feet) | Well Construction |
|---|---|---|---|---|---|---|---|---|---|---|
| | | SM | | | | | | | | Bentonite grout |
| | | ML | ML; Sandy SILT, brown (7.5YR 4/3), some fine-grained sand, non to low plasticity fines, moist, no hydrocarbon (HC) odor, no staining | | | | | | | |
| | | CL | CL; Lean CLAY, brown (7.5YR 4/2), trace fine-grained sand, med. to high plasticity fines, moist, no HC odor, no staining | | -- -- | | | 2.1 | | |
| 25 | | | | | | | | | 25 | |
| | | | | | | | | | | Bentonite chips<br>#3 sand |
| | | SC | SC; Clayey SAND, brown (7.5YR 4/3), fine to med.-grained sand, some med. plasticity fines, moist, no HC odor, no staining | | -- -- | | | 2.3 | | |
| 30 | | | | | | | | | 30 | 10" Stainless steel vapor implant |
| | | SM | SM; Silty SAND, brown (7.5YR 4/3), fine to med.-grained sand, some non plastic fines, moist, no HC odor, no staining | | | | | | | |
| | | SP-SM | SP-SM; Poorly Graded SAND with Silt, brown (10YR 5/3), fine-grained sand, little fines, moist, no HC odor, no staining | | 1251 SB-6-35 | | | 2.5 | | |
| 35 | | | | | | | | | 35 | |
| | | SM | SM; Silty SAND, brown (7.5YR 4/3), fine to med.-grained sand, some fines, moist, no HC odor, no staining<br><br>Same as above, trace fine gravel | | | | | | | |
| 40 | | | Borehole terminated at 40 feet bgs. | | | | | | 40 | |

| | |
|---|---|
| PROJECT: **Grayson Power Plant - Phase II ESA**<br>LOCATION: **800 Airway, Glendale, CA**<br>PROJECT NUMBER: **2057123300** | WELL / PROBEHOLE / BOREHOLE NO:<br>**SB-7** PAGE 1 OF 2 |
| DRILLING: STARTED: **4/27/2016** COMPLETED: **4/27/2016**<br>INSTALLATION: STARTED: **4/27/2016** COMPLETED: **4/27/2016**<br>DRILLING COMPANY: **Core Probe International**<br>DRILLING EQUIPMENT: **Geo Probe 7822 DT**<br>DRILLING METHOD: **Direct Push**<br>SAMPLING EQUIPMENT: **Acetate Liners/Terracores/Jars** | NORTHING (ft): EASTING (ft):<br>LATITUDE: LONGITUDE:<br>GROUND ELEV (ft): TOC ELEV (ft):<br>INITIAL DTW (ft): **NE** BOREHOLE DEPTH (ft): **40.0**<br>STATIC DTW (ft): **NE** WELL DEPTH (ft): **NA**<br>WELL CASING DIAMETER (in): **NA** BOREHOLE DIAMETER (in): **2.25**<br>LOGGED BY: **J. Sargent** CHECKED BY: **A. Sawant** |

| Time & Depth (feet) | Graphic Log | USCS | Description | Sample | Time Sample ID | Measured Recov. (feet) | Blow Count/ft | Headspace PID (ppm) | Depth (feet) |
|---|---|---|---|---|---|---|---|---|---|
| | | | 4" Asphalt | | | | | | |
| | | SM | SM; Silty SAND with Gravel, brown (10YR 4/3), fine to coarse-grained sand, some fine to coarse gravel, some fines, wet (adjacent to cooling tower pond), no hydrocarbon (HC) odor, no staining | | 1134 SB-7-1 | | | 0.1 | |
| | | | | | -- -- | | | 0.2 | |
| 5 | | | Same as above | | | | | | 5 |
| | | | Very dark staining, black (7.5YR 2.5/1), faint HC odor | | -- -- | | | 0.2 | |
| | | | No staining, no odor, brown (7.5YR 4/3) | | 1335 SB-7-10 | | | 0.4 | |
| 10 | | | | | | | | | 10 |
| | | | Heavy staining, very dark gray (7.5YR 3/1), slight HC odor | | | | | | |
| | | | | | 1337 SB-7-15 | | | 2.3 | |
| 15 | | | Black (7.5YR 2.5/1) | | | | | | 15 |
| | | | | | -- -- | | | 1.8 | |
| | | | | | -- -- | | | 0.6 | |
| 20 | | | Light staining, appears to be fill material | | | | | | 20 |
| | | SM | SM; Silty SAND, light olive brown (2.5Y 5/3), fine-grained sand, some fines, moist, no HC odor, no staining, no fill material observed | | | | | | |

| | |
|---|---|
| PROJECT: **Grayson Power Plant - Phase II ESA**<br>LOCATION: **800 Airway, Glendale, CA**<br>PROJECT NUMBER: **2057123300** | WELL / PROBEHOLE / BOREHOLE NO:<br>**SB-7** PAGE 2 OF 2 |
| DRILLING: STARTED: **4/27/2016** COMPLETED: **4/27/2016**<br>INSTALLATION: STARTED: **4/27/2016** COMPLETED: **4/27/2016**<br>DRILLING COMPANY: **Core Probe International**<br>DRILLING EQUIPMENT: **Geo Probe 7822 DT**<br>DRILLING METHOD: **Direct Push**<br>SAMPLING EQUIPMENT: **Acetate Liners/Terracores/Jars** | NORTHING (ft): EASTING (ft):<br>LATITUDE: LONGITUDE:<br>GROUND ELEV (ft): TOC ELEV (ft):<br>INITIAL DTW (ft): **NE** BOREHOLE DEPTH (ft): **40.0**<br>STATIC DTW (ft): **NE** WELL DEPTH (ft): **NA**<br>WELL CASING DIAMETER (in): **NA** BOREHOLE DIAMETER (in): **2.25**<br>LOGGED BY: **J. Sargent** CHECKED BY: **A. Sawant** |

| Time & Depth (feet) | Graphic Log | USCS | Description | Sample | Time Sample ID | Measured Recov. (feet) | Blow Count/ft | Headspace PID (ppm) | Depth (feet) |
|---|---|---|---|---|---|---|---|---|---|
| | | SM | | | -- -- | | | 0.3 | |
| 25 | | | | | | | | | 25 |
| | | ML | ML; Sandy SILT, olive brown (2.5Y 4/4), some fine-grained sand, non-plastic fines, moist, no HC odor, no staining | | | | | | |
| | | SM | SM; Silty SAND, light olive brown (2.5Y 5/3), fine-grained sand, some fines, moist, no HC odor, no staining | | -- -- | | | 0.3 | |
| 30 | | | | | | | | | 30 |
| 35 | | SP-SM | SP-SM; Poorly Graded SAND with Silt, light yellowish brown (2.5Y 6/4), fine-grained sand, little fines, moist, no HC odor, no staining | | 1350 SB-7-35 | | | 0.2 | 35 |
| | | SM | SM; Silty SAND, light olive brown (2.5Y 5/3), fine-grained sand, some fines, moist, no HC odor, no staining | | -- -- | | | 0.2 | |
| 40 | | | Borehole terminated at 40 feet bgs. | | | | | | 40 |

PROJECT: **Grayson Power Plant - Phase II ESA**
LOCATION: **800 Airway, Glendale, CA**
PROJECT NUMBER: **2057123300**

WELL / PROBEHOLE / BOREHOLE NO: **SB-8** PAGE 1 OF 2

Stantec

DRILLING: STARTED: **4/27/2016** COMPLETED: **4/27/2016**
INSTALLATION: STARTED: **4/27/2016** COMPLETED: **4/27/2016**
DRILLING COMPANY: **Core Probe International**
DRILLING EQUIPMENT: **Geo Probe 7822 DT**
DRILLING METHOD: **Direct Push**
SAMPLING EQUIPMENT: **Acetate Liners/Terracores/Jars**

NORTHING (ft):
EASTING (ft):
LATITUDE:
LONGITUDE:
GROUND ELEV (ft):
TOC ELEV (ft):
INITIAL DTW (ft): **NE**
BOREHOLE DEPTH (ft): **40.0**
STATIC DTW (ft): **NE**
WELL DEPTH (ft): **NA**
WELL CASING DIAMETER (in): **NA**
BOREHOLE DIAMETER (in): **2.25**
LOGGED BY: **J. Sargent**
CHECKED BY: **A. Sawant**

| Time & Depth (feet) | Graphic Log | USCS | Description | Sample | Time Sample ID | Measured Recov. (feet) | Blow Count/ft | Headspace PID (ppm) | Depth (feet) | Well Construction |
|---|---|---|---|---|---|---|---|---|---|---|
| | | | 4" Asphalt | | | | | | | |
| | | SM | SM; Silty SAND, dark grayish brown (2.5Y 4/2), fine to med.-grained sand, some fines, wet (boring is adjacent to cooling water pond), no hydrocarbon (HC) odor, no staining | ■ | 0837 SB-8-1 | | | 0.3 | | Bentonite grout |
| | | | | | -- -- | | | 1.3 | | Bentonite chips; #3 sand |
| 5 | | | Same as above, trace fine gravel | | | | | | 5 | 10" Stainless steel vapor implant |
| | | | | | -- -- | | | 9.6 | | |
| 10 | | | Same as above, varying percentage of fine-grained sand from trace to little, moist | | | | | | 10 | Bentonite grout |
| | | | | | -- -- | | | 10.2 | | Bentonite chips; #3 sand |
| 15 | | | | | | | | | 15 | 10" Stainless steel vapor implant; #3 sand |
| | | | | ■ | 0924 SB-8-20 | | | 15.8 | | |
| 20 | | | | | | | | | 20 | |

| | |
|---|---|
| PROJECT: **Grayson Power Plant - Phase II ESA**<br>LOCATION: **800 Airway, Glendale, CA**<br>PROJECT NUMBER: **2057123300** | WELL / PROBEHOLE / BOREHOLE NO:<br>**SB-8** PAGE 2 OF 2 |
| DRILLING: STARTED: **4/27/2016** COMPLETED: **4/27/2016**<br>INSTALLATION: STARTED: **4/27/2016** COMPLETED: **4/27/2016**<br>DRILLING COMPANY: **Core Probe International**<br>DRILLING EQUIPMENT: **Geo Probe 7822 DT**<br>DRILLING METHOD: **Direct Push**<br>SAMPLING EQUIPMENT: **Acetate Liners/Terracores/Jars** | NORTHING (ft): EASTING (ft):<br>LATITUDE: LONGITUDE:<br>GROUND ELEV (ft): TOC ELEV (ft):<br>INITIAL DTW (ft): **NE** BOREHOLE DEPTH (ft): **40.0**<br>STATIC DTW (ft): **NE** WELL DEPTH (ft): **NA**<br>WELL CASING DIAMETER (in): **NA** BOREHOLE DIAMETER (in): **2.25**<br>LOGGED BY: **J. Sargent** CHECKED BY: **A. Sawant** |

| Time & Depth (feet) | Graphic Log | USCS | Description | Sample | Time Sample ID | Measured Recov. (feet) | Blow Count/ft | Headspace PID (ppm) | Depth (feet) | Well Construction |
|---|---|---|---|---|---|---|---|---|---|---|
| | | SM | SM; Silty SAND with Gravel, brown (10YR 4/3), some fine to coarse gravel, med. to coarse-grained sand, some fines, moist, no HC odor, no staining | | | | | | | Bentonite grout |
| 25 | | SW-SM | SW-SM; Well Graded SAND with Silt, light olive brown (12.5Y 5/3), fine to coarse-grained sand, trace fine gravel, little fines, moist<br>At 24.5' bgs, strong HC odor, some HC staining | | 0925<br>SB-8-25 | | | 136 | 25 | |
| | | SP-SM | SP-SM; Poorly Graded SAND, light olive brown (2.5Y 5/4), fine-grained sand, little fines, moist, no HC odor, no staining | | | | | | | |
| | | ML | ML; Sandy SILT, brown (10YR 4/3), some very fine-grained sand, non to low plasticity fines, moist, no HC odor, no staining | | | | | | | Bentonite chips<br>#3 sand |
| 30 | | SM | SM; Silty SAND, brown (10YR 4/3), fine to med.-grained sand, some fines, moist, no HC odor, no staining | | --<br>-- | | | 12.7 | 30 | 10" Stainless steel vapor implant |
| 35 | | | Becomes light olive brown (2.5Y 5/4), fine to med.-grained sand, trace fine gravel | | --<br>-- | | | 3.2 | 35 | |
| | | | Increase in gravel | | | | | | | |
| 40 | | | Borehole terminated at 40 feet bgs. | | 0944<br>SB-8-40 | | | 10.8 | 40 | |

| | |
|---|---|
| PROJECT: **Grayson Power Plant - Phase II ESA**<br>LOCATION: **800 Airway, Glendale, CA**<br>PROJECT NUMBER: **2057123300** | WELL / PROBEHOLE / BOREHOLE NO:<br>**SB-9** PAGE 1 OF 3 |
| DRILLING: STARTED: **4/28/2016** COMPLETED: **4/28/2016**<br>INSTALLATION: STARTED: **4/28/2016** COMPLETED: **4/28/2016**<br>DRILLING COMPANY: **Core Probe International**<br>DRILLING EQUIPMENT: **Geo Probe 7822 DT**<br>DRILLING METHOD: **Direct Push**<br>SAMPLING EQUIPMENT: **Acetate Liners/Terracores/Jars** | NORTHING (ft): EASTING (ft):<br>LATITUDE: LONGITUDE:<br>GROUND ELEV (ft): TOC ELEV (ft):<br>INITIAL DTW (ft): **41** BOREHOLE DEPTH (ft): **50.0**<br>STATIC DTW (ft): **42.67** WELL DEPTH (ft): **NA**<br>WELL CASING DIAMETER (in): **NA** BOREHOLE DIAMETER (in): **2.25**<br>LOGGED BY: **J. Sargent** CHECKED BY: **A. Sawant** |

| Time & Depth (feet) | Graphic Log | USCS | Description | Sample | Time Sample ID | Measured Recov. (feet) | Blow Count/ft | Headspace PID (ppm) | Depth (feet) |
|---|---|---|---|---|---|---|---|---|---|
| | | | 4" Asphalt | | | | | | |
| | | SM | SM; Silty SAND with Gravel; very dark brown (10YR 2/2), some fine to coarse-grained sand, some fine to coarse gravel, some asphalt fragments, no HC odor, no staining | | 1131 SB-9-1 | | | 0.6 | |
| 5 | | | | | 1145 SB-9-5 | | | 1.3 | 5 |
| | | | Color change to dark yellowish brown (10YR 4/4) | | | | | | |
| | | | Asphalt fragments, appears to be fill, non-native | | | | | | |
| 10 | | | | | 1150 SB-9-10 | | | 1.8 | 10 |
| 15 | | | No recovery, very hard drilling, many rocks observed, sample liner melted | | -- -- | | | 1.2 | 15 |
| 20 | | | At 20' bgs, native | | | | | | 20 |
| | | SP-SM | SP-SM; Poorly Graded SAND with Silt, brown (10YR 5/3), fine-grained sand, trace coarse-grained sand, little fines, moist, no asphalt fragments, no HC odor, no staining, appears native | | | | | | |

GEO FORM 304_SECOR037 20160602_GINT_GRAYSON_SB-1_THROUGH_SB-16.GPJ SECOR037.GDT 6/9/16

| | |
|---|---|
| PROJECT: **Grayson Power Plant - Phase II ESA**<br>LOCATION: **800 Airway, Glendale, CA**<br>PROJECT NUMBER: **2057123300** | WELL / PROBEHOLE / BOREHOLE NO:<br>**SB-9** PAGE 2 OF 3 |
| DRILLING: STARTED: **4/28/2016** COMPLETED: **4/28/2016**<br>INSTALLATION: STARTED: **4/28/2016** COMPLETED: **4/28/2016**<br>DRILLING COMPANY: **Core Probe International**<br>DRILLING EQUIPMENT: **Geo Probe 7822 DT**<br>DRILLING METHOD: **Direct Push**<br>SAMPLING EQUIPMENT: **Acetate Liners/Terracores/Jars** | NORTHING (ft): EASTING (ft):<br>LATITUDE: LONGITUDE:<br>GROUND ELEV (ft): TOC ELEV (ft):<br>INITIAL DTW (ft): **41** BOREHOLE DEPTH (ft): **50.0**<br>STATIC DTW (ft): **42.67** WELL DEPTH (ft): **NA**<br>WELL CASING DIAMETER (in): **NA** BOREHOLE DIAMETER (in): **2.25**<br>LOGGED BY: **J. Sargent** CHECKED BY: **A. Sawant** |

| Time & Depth (feet) | Graphic Log | USCS | Description | Sample | Time Sample ID | Measured Recov. (feet) | Blow Count/ft | Headspace PID (ppm) | Depth (feet) |
|---|---|---|---|---|---|---|---|---|---|
| | | SP-SM | | | | | | | |
| | | | | | 1210 SB-9-25 | | | 0.3 | |
| 25 | | | | | | | | | 25 |
| | | | | | -- -- | | | 0.5 | |
| 30 | | | | | | | | | 30 |
| | | | | | -- -- | | | 0.3 | |
| 35 | | | | | | | | | 35 |
| | | SC | SC; Clayey SAND, dark yellowish brown (10YR 3/4), fine to med.-grained sand, some fines, moist, no HC odor, no staining | | | | | | |
| | | | | | -- -- | | | 0.3 | |
| 40 | | SM | SM; Silty SAND, dark yellowish brown (10YR 3/4), fine to med.-grained sand, some fines, moist, no HC odor, no staining | | | | | | 40 |
| | | | | | 1244 SB-9-GW | | | | |
| | | CL | CL; Lean CLAY, brown (10YR 4/4), trace fine-grained sand, low | | | | | | |

| | |
|---|---|
| PROJECT: **Grayson Power Plant - Phase II ESA**<br>LOCATION: **800 Airway, Glendale, CA**<br>PROJECT NUMBER: **2057123300** | WELL / PROBEHOLE / BOREHOLE NO:<br>**SB-9** PAGE 3 OF 3 |
| DRILLING: STARTED: **4/28/2016** COMPLETED: **4/28/2016**<br>INSTALLATION: STARTED: **4/28/2016** COMPLETED: **4/28/2016**<br>DRILLING COMPANY: **Core Probe International**<br>DRILLING EQUIPMENT: **Geo Probe 7822 DT**<br>DRILLING METHOD: **Direct Push**<br>SAMPLING EQUIPMENT: **Acetate Liners/Terracores/Jars** | NORTHING (ft): EASTING (ft):<br>LATITUDE: LONGITUDE:<br>GROUND ELEV (ft): TOC ELEV (ft):<br>INITIAL DTW (ft): **41** BOREHOLE DEPTH (ft): **50.0**<br>STATIC DTW (ft): **42.67** WELL DEPTH (ft): **NA**<br>WELL CASING DIAMETER (in): **NA** BOREHOLE DIAMETER (in): **2.25**<br>LOGGED BY: **J. Sargent** CHECKED BY: **A. Sawant** |

| Time & Depth (feet) | Graphic Log | USCS | Description | Sample | Time Sample ID | Measured Recov. (feet) | Blow Count/ft | Headspace PID (ppm) | Depth (feet) |
|---|---|---|---|---|---|---|---|---|---|
| | | CL | plasticity fines, wet, no HC odor, no staining | | | | | | |
| 45 | | SM | SM; Silty SAND, dark brown (7.5YR 3/4), heaving sands, fine to med.-grained sand, some fines, wet, no HC odor, no staining | | | | | | 45 |
| | | CL | CL; Lean CLAY, dark brown (10YR 4/3), some fine-grained sand, med. plasticity fines, wet, no HC odor, no staining | | | | | | |
| | | SW-SM | SW-SM; Well Graded SAND with Silt, brown (10YR 4/3), fine to coarse-grained sand, some fines, wet, no HC odor, no staining | | | | | | |
| 50 | | | Borehole terminated at 50 feet bgs. | | | | | | 50 |
| 55 | | | | | | | | | 55 |
| 60 | | | | | | | | | 60 |
| 65 | | | | | | | | | 65 |

**TABLE 1**
**Soil Analytical Results - Volatile Organic Compounds (VOCs)**
800 Air Way, Glendale, California

| Boring Number | Sample Depth (ft bgs) | Sample Number | Sample Date | 8260B (mg/kg) | | | | | |
|---|---|---|---|---|---|---|---|---|---|
| | | | | Acetone | Benzene | Toluene | m,p-Xylenes | TCE | Other VOCs |
| SB-1 | 5 | SB-1-5 | 4/29/16 | ND | ND | ND | ND | ND | ND |
| | 10 | SB-1-10 | | ND | ND | ND | ND | ND | ND |
| SB-2 | 10 | SB-2-10 | 4/29/16 | ND | ND | ND | ND | ND | ND |
| | 20 | SB-2-20 | | ND | ND | ND | ND | ND | ND |
| SB-3 | 35 | SB-3-35 | 4/28/16 | ND | ND | ND | ND | ND | ND |
| | 40 | SB-3-40 | | ND | ND | ND | **0.0024** | ND | ND |
| SB-4 | 10 | SB-4-10 | 4/29/16 | ND | ND | ND | ND | ND | ND |
| | 20 | SB-4-20 | | ND | ND | ND | ND | ND | ND |
| SB-5 | 20 | SB-5-20 | 4/28/16 | ND | ND | ND | ND | ND | ND |
| | 30 | SB-5-30 | | ND | ND | ND | ND | ND | ND |
| SB-6 | 10 | SB-6-10 | 4/27/16 | ND | ND | ND | ND | ND | ND |
| | 35 | SB-6-35 | | ND | ND | ND | ND | ND | ND |
| SB-7 | 10 | SB-7-10 | 4/27/16 | ND | ND | ND | ND | ND | ND |
| | 15 | SB-7-15 | | ND | ND | ND | ND | ND | ND |
| SB-8 | 20 | SB-8-20 | 4/27/16 | ND | ND | ND | ND | ND | ND |
| | 25 | SB-8-25 | | ND | ND | ND | ND | ND | ND |
| SB-9 | 5 | SB-9-5 | 4/28/16 | ND | **0.0040** | **0.0021** | ND | **0.0064** | ND |
| | 10 | SB-9-10 | | ND | **0.0098** | **0.0067** | **0.0030** | **0.0052** | ND |
| SB-10 | 10 | SB-10-10 | 4/29/16 | ND | ND | ND | ND | ND | ND |
| | 15 | SB-10-15 | | **0.29** | ND | ND | ND | **0.0052** | ND |
| SB-11 | 5 | SB-11-5 | 4/28/16 | ND | ND | ND | ND | ND | ND |
| | 35 | SB-11-35 | | ND | ND | ND | ND | ND | ND |
| SB-12 | 20 | SB-12-20 | 4/27/16 | ND | ND | ND | ND | ND | ND |
| | 40 | SB-12-40 | | ND | ND | ND | ND | ND | ND |
| SB-13 | 5 | SB-13-5 | 4/29/16 | ND | ND | ND | ND | ND | ND |
| | 15 | SB-13-15 | | ND | ND | ND | ND | ND | ND |
| SB-14 | 5 | SB-14-5 | 4/26/16 | ND | ND | ND | ND | ND | ND |
| | 15 | SB-14-15 | | ND | ND | ND | ND | ND | ND |
| SB-15 | 5 | SB-15-5 | 4/26/16 | ND | ND | ND | ND | ND | ND |
| | 11 | SB-15-11 | | ND | ND | ND | ND | ND | ND |
| SB-16 | 5 | SB-16-5 | 4/26/16 | ND | ND | ND | ND | ND | ND |
| | 11 | SB-16-11 | | ND | ND | ND | ND | ND | ND |
| **USEPA RSL, Residential Soil** | | | | **61,000** | **1.2** | **4,900** | **1,110** | **0.94** | **--** |
| **USEPA RSL, Industrial Soil** | | | | **670,000** | **5.1** | **47,000** | **4,800** | **6.0** | **--** |
| **SFRWQCB ESL** | | | | **0.50** | **0.044** | **2.90** | **2.3** | **--** | **--** |
| **OEHHA, Residential Scenario** | | | | **--** | **--** | **--** | **--** | **--** | **--** |
| **OEHHA, Industrial Scenario** | | | | **--** | **--** | **--** | **--** | **--** | **--** |

**Notes:**

ND = Constituents not detected at or above their respective laboratory method reporting limit as reported in Appendix D

mg/kg = milligrams per kilogram

ft bgs = feet below ground surface

USEPA RSL = United States Environmental Protection Agency Regional Screening Level (May 2016)

**Blue** = Exceeds USEPA RSL, Residential Soil

**Red** = Exceeds USEPA RSL, Industrial Soil

SFRWQCB ESLs = San Francisco Regional Water Quality Control Board Environmental Screening Levels - Tier 1

= Exceeds ESLs

NA = Not applicable

-- = Not Established

OEHHA Screening Levels = Office of Environmental Health Hazard Assessment Screening Levels

= Exceeds OEHHA Screening Levels (Residential)

= Exceeds OEHHA Screening Levels (Industrial)

**TABLE 2**
**Soil Analytical Results - Total Petroleum Hydrocarbons (TPH)**
800 Air Way, Glendale, California

| Boring Number | Sample Depth (ft bgs) | Sample Number | Sample Date | EPA 8015B(M) (mg/kg) | | | | | | | | | | | | | | | | |
|---|---|---|---|---|---|---|---|---|---|---|---|---|---|---|---|---|---|---|---|---|
| | | | | C6-C8 | C8-C10 | C10-C12 | C12-C14 | C14-C16 | C16-C18 | C18-C20 | C20-C22 | C22-C24 | C24-C26 | C26-C28 | C28-C32 | C32-C34 | C34-C36 | C36-C40 | C40-C44 | TPH (C6-C44) |
| **SB-1** | 5 | SB-1-5 | 4/29/16 | <1.0 | <1.0 | <1.0 | <1.0 | <1.0 | **2.6** | **5.6** | **9.6** | **18** | **18** | **33** | **96** | **26** | **23** | **37** | **11** | **280** |
| | 10 | SB-1-10 | | <10 | <10 | <10 | **36** | **170** | **310** | **440** | **620** | **800** | **1,000** | **1,200** | **2,500** | **640** | **280** | **440** | **270** | **8,700** |
| **SB-2** | 10 | SB-2-10 | 4/29/16 | <1.0 | <1.0 | <1.0 | <1.0 | <1.0 | <1.0 | <1.0 | <1.0 | <1.0 | <1.0 | <1.0 | <1.0 | <1.0 | <1.0 | <1.0 | <1.0 | <10 |
| | 20 | SB-2-20 | | <1.0 | **2.7** | <1.0 | <1.0 | **1.1** | <1.0 | <1.0 | <1.0 | <1.0 | <1.0 | **1.8** | <1.0 | <1.0 | <1.0 | <1.0 | <1.0 | <10 |
| **SB-3** | 35 | SB-3-35 | 4/28/16 | <1.0 | <1.0 | <1.0 | <1.0 | **3.2** | <1.0 | <1.0 | <1.0 | <1.0 | <1.0 | <1.0 | <1.0 | <1.0 | <1.0 | <1.0 | <1.0 | <10 |
| | 40 | SB-3-40 | | <1.0 | <1.0 | <1.0 | <1.0 | **2.1** | <1.0 | <1.0 | <1.0 | <1.0 | <1.0 | <1.0 | <1.0 | <1.0 | <1.0 | <1.0 | <1.0 | <10 |
| **SB-4** | 10 | SB-4-10 | 4/29/16 | <1.0 | <1.0 | <1.0 | <1.0 | <1.0 | <1.0 | <1.0 | <1.0 | <1.0 | <1.0 | <1.0 | **1.0** | <1.0 | <1.0 | <1.0 | <1.0 | <10 |
| | 20 | SB-4-20 | | <1.0 | <1.0 | <1.0 | <1.0 | <1.0 | <1.0 | <1.0 | <1.0 | <1.0 | <1.0 | <1.0 | <1.0 | <1.0 | <1.0 | <1.0 | <1.0 | <10 |
| **SB-5** | 20 | SB-5-20 | 4/28/16 | <1.0 | <1.0 | <1.0 | <1.0 | **2.6** | <1.0 | <1.0 | <1.0 | <1.0 | <1.0 | **1.1** | **2.7** | **1.1** | <1.0 | **1.4** | <1.0 | **10** |
| | 30 | SB-5-30 | | <1.0 | <1.0 | <1.0 | <1.0 | <1.0 | <1.0 | <1.0 | <1.0 | <1.0 | <1.0 | <1.0 | <1.0 | <1.0 | <1.0 | <1.0 | <1.0 | <10 |
| **SB-6** | 10 | SB-6-10 | 4/27/16 | <1.0 | <1.0 | <1.0 | <1.0 | <1.0 | <1.0 | <1.0 | **1.2** | **1.3** | **2.5** | **4.6** | **13** | **5.4** | **5.8** | **11** | **7.2** | **53** |
| | 35 | SB-6-35 | | <1.0 | <1.0 | **1.2** | <1.0 | **2.9** | <1.0 | <1.0 | <1.0 | <1.0 | <1.0 | **1.5** | <1.0 | <1.0 | <1.0 | <1.0 | <1.0 | <10 |
| **SB-7** | 10 | SB-7-10 | 4/27/16 | <1.0 | <1.0 | **1.1** | <1.0 | **4.4** | <1.0 | <1.0 | <1.0 | <1.0 | **1.0** | <1.0 | **1.0** | <1.0 | <1.0 | <1.0 | <1.0 | <10 |
| | 15 | SB-7-15 | | <1.0 | <1.0 | <1.0 | <1.0 | **2.1** | **3.8** | **6.2** | **13** | **14** | **18** | **20** | **39** | **16** | **14** | **21** | **12** | **180** |
| **SB-8** | 20 | SB-8-20 | 4/27/16 | <1.0 | <1.0 | <1.0 | <1.0 | **1.9** | **1.7** | <1.0 | <1.0 | <1.0 | <1.0 | <1.0 | **1.4** | <1.0 | <1.0 | <1.0 | <1.0 | <10 |
| | 25 | SB-8-25 | | <100 | <100 | **220** | **680** | **1,200** | **1,200** | **1,300** | **2,200** | **2,500** | **2,600** | **3,100** | **5,400** | **2,100** | **1,500** | **1,800** | **1,000** | **27,000** |
| **SB-9** | 5 | SB-9-5 | 4/28/16 | <1.0 | <1.0 | **1.4** | <1.0 | <1.0 | <1.0 | <1.0 | <1.0 | <1.0 | **1.0** | **2.3** | **5.0** | **3.1** | **2.1** | **5.4** | <1.0 | **20** |
| | 10 | SB-9-10 | | <1.0 | <1.0 | <1.0 | <1.0 | <1.0 | <1.0 | <1.0 | <1.0 | <1.0 | <1.0 | <1.0 | **1.2** | <1.0 | <1.0 | <1.0 | <1.0 | <10 |
| **SB-10** | 10 | SB-10-10 | 4/29/16 | <5.0 | <5.0 | <5.0 | <5.0 | <5.0 | <5.0 | **13** | **24** | **49** | **62** | **80** | **200** | **76** | **40** | **48** | **20** | **610** |
| | 15 | SB-10-15 | | <1.0 | **1.6** | **1.3** | **3.0** | <1.0 | <1.0 | <1.0 | <1.0 | <1.0 | <1.0 | <1.0 | <1.0 | <1.0 | <1.0 | <1.0 | <1.0 | <10 |
| **SB-11** | 5 | SB-11-5 | 4/28/16 | <1.0 | <1.0 | <1.0 | <1.0 | <1.0 | <1.0 | <1.0 | <1.0 | <1.0 | <1.0 | **1.2** | **3.3** | **1.5** | **1.0** | **2.9** | <1.0 | <10 |
| | 35 | SB-11-35 | | <1.0 | <1.0 | <1.0 | **1.2** | **2.1** | <1.0 | <1.0 | <1.0 | <1.0 | <1.0 | **2.3** | **1.2** | <1.0 | <1.0 | <1.0 | <1.0 | <10 |
| **SB-12** | 20 | SB-12-20 | 4/27/16 | <1.0 | <1.0 | <1.0 | <1.0 | <1.0 | <1.0 | <1.0 | <1.0 | <1.0 | <1.0 | **1.1** | <1.0 | <1.0 | <1.0 | <1.0 | <1.0 | <10 |
| | 40 | SB-12-40 | | <1.0 | <1.0 | <1.0 | <1.0 | <1.0 | <1.0 | <1.0 | <1.0 | <1.0 | <1.0 | **3.3** | **1.8** | <1.0 | <1.0 | <1.0 | <1.0 | <10 |
| **SB-13** | 5 | SB-13-5 | 4/29/16 | <1.0 | **1.0** | <1.0 | <1.0 | <1.0 | <1.0 | <1.0 | <1.0 | <1.0 | <1.0 | <1.0 | <1.0 | <1.0 | <1.0 | <1.0 | <1.0 | <10 |
| | 15 | SB-13-15 | | <1.0 | <1.0 | <1.0 | <1.0 | **1.4** | <1.0 | <1.0 | <1.0 | <1.0 | <1.0 | <1.0 | <1.0 | <1.0 | <1.0 | <1.0 | <1.0 | <10 |
| **SB-14** | 5 | SB-14-5 | 4/26/16 | <1.0 | <1.0 | <1.0 | <1.0 | <1.0 | <1.0 | <1.0 | <1.0 | <1.0 | <1.0 | <1.0 | <1.0 | <1.0 | <1.0 | <1.0 | <1.0 | <10 |
| | 15 | SB-14-15 | | <1.0 | <1.0 | <1.0 | <1.0 | <1.0 | <1.0 | <1.0 | <1.0 | <1.0 | <1.0 | <1.0 | <1.0 | <1.0 | <1.0 | <1.0 | <1.0 | <10 |
| **SB-15** | 5 | SB-15-5 | 4/26/16 | <1.0 | <1.0 | <1.0 | <1.0 | <1.0 | <1.0 | <1.0 | <1.0 | <1.0 | <1.0 | <1.0 | <1.0 | <1.0 | <1.0 | <1.0 | <1.0 | <10 |
| | 11 | SB-15-11 | | <1.0 | <1.0 | <1.0 | <1.0 | <1.0 | <1.0 | <1.0 | <1.0 | <1.0 | <1.0 | <1.0 | <1.0 | <1.0 | <1.0 | <1.0 | <1.0 | <10 |
| **SB-16** | 5 | SB-16-5 | 4/26/16 | <1.0 | <1.0 | <1.0 | <1.0 | <1.0 | <1.0 | <1.0 | <1.0 | <1.0 | <1.0 | <1.0 | <1.0 | <1.0 | <1.0 | <1.0 | <1.0 | <10 |
| | 11 | SB-16-11 | | <1.0 | <1.0 | <1.0 | <1.0 | <1.0 | <1.0 | <1.0 | <1.0 | <1.0 | <1.0 | <1.0 | <1.0 | <1.0 | <1.0 | <1.0 | <1.0 | <10 |

**Notes:**
TPHcc = Total Petroleum Hydrocarbon Carbon Chain Characterization (C6 - C44)
mg/kg = milligrams per kilogram
ft bgs = feet below ground surface
ND = Constituents not detected at or above their respective laboratory method reporting limit as reported in Appendix D

**TABLE 3**
**Soil Analytical Results - CAM Metals**
800 Air Way, Glendale, California

| Boring Number | Sample Number | Sample Depth (ft bgs) | Sample Date | 6010B (mg/kg) | | | | | | | | | | | | | | | | 7471A (mg/kg) |
|---|---|---|---|---|---|---|---|---|---|---|---|---|---|---|---|---|---|---|---|---|
| | | | | Antimony | Arsenic | Barium | Berylium | Cadmium | Chromium | Cobalt | Copper | Lead | Molybdenum | Nickel | Selenium | Silver | Thallium | Vanadium | Zinc | Mercury |
| SB-1 | SB-1-1 | surface | 4/29/16 | <10 | 1.4 | 90 | <1.0 | <1.0 | 12 | 11 | 30 | 25 | <5.0 | 12 | <0.50 | <1.0 | <5.0 | 37 | 200 | 0.110 |
| SB-2 | SB-2-1 | surface | 4/29/16 | <10 | 1.2 | 48 | <1.0 | <1.0 | 11 | 13 | 4.2 | <3.0 | <5.0 | 7.1 | <0.50 | <1.0 | <5.0 | 68 | 90 | 0.020 |
| SB-3 | SB-3-1 | surface | 4/28/16 | <10 | 11 | 190 | <1.0 | <1.0 | 25 | 15 | 36 | 9.8 | <5.0 | 20 | <0.50 | <1.0 | <5.0 | 69 | 94 | 0.021 |
| SB-4 | SB-4-1 | surface | 4/29/16 | <10 | 0.60 | 180 | <1.0 | <1.0 | 10 | 13 | 19 | 4.0 | <5.0 | 7.6 | <0.50 | <1.0 | <5.0 | 60 | 77 | 0.021 |
| SB-5 | SB-5-1 | surface | 4/28/16 | <10 | 2.3 | 130 | <1.0 | <1.0 | 13 | 9.8 | 16 | 9.2 | <5.0 | 8.6 | <0.50 | <1.0 | <5.0 | 48 | 83 | 0.083 |
| SB-6 | SB-6-1 | surface | 4/27/16 | <10 | 4.4 | 110 | <1.0 | 3.8 | 15 | 8.2 | 41 | 220 | <5.0 | 9.2 | <0.50 | <1.0 | <5.0 | 43 | 290 | 0.310 |
| SB-7 | SB-7-1 | surface | 4/27/16 | <10 | 2.5 | 140 | <1.0 | <1.0 | 30 | 11 | 29 | 49 | <5.0 | 13 | <0.50 | <1.0 | <5.0 | 53 | 170 | 0.080 |
| SB-8 | SB-8-1 | surface | 4/27/16 | <10 | 6.3 | 130 | <1.0 | <1.0 | 22 | 9.8 | 27 | 27 | <5.0 | 26 | <0.50 | <1.0 | <5.0 | 51 | 120 | 0.083 |
| SB-9 | SB-9-1 | surface | 4/28/16 | <10 | 1.8 | 97 | <1.0 | <1.0 | 11 | 7.8 | 13 | 7.5 | <5.0 | 7.6 | <0.50 | <1.0 | <5.0 | 38 | 56 | 0.063 |
| SB-10 | SB-10-1 | surface | 4/29/16 | <10 | 3.6 | 140 | <1.0 | <1.0 | 16 | 13 | 18 | 7.1 | <5.0 | 12 | <0.50 | <1.0 | <5.0 | 58 | 91 | 0.086 |
| SB-11 | SB-11-1 | surface | 4/28/16 | <10 | 3.0 | 110 | <1.0 | <1.0 | 13 | 10 | 17 | 11 | <5.0 | 9.9 | <0.50 | <1.0 | <5.0 | 49 | 76 | 0.088 |
| SB-12 | SB-12-1 | surface | 4/26/16 | <10 | 3.0 | 230 | <1.0 | <1.0 | 12 | 8.8 | 68 | 170 | <5.0 | 17 | <0.50 | <1.0 | <5.0 | 42 | 260 | 0.120 |
| SB-13 | SB-13-1 | surface | 4/29/16 | <10 | 1.5 | 96 | <1.0 | <1.0 | 9.3 | 6.6 | 18 | 56 | <5.0 | 6.6 | <0.50 | <1.0 | <5.0 | 35 | 130 | 0.080 |
| SB-14 | SB-14-1 | surface | 4/26/16 | <10 | 3.6 | 130 | <1.0 | <1.0 | 15 | 11 | 21 | 6.3 | <5.0 | 10 | <0.50 | <1.0 | <5.0 | 57 | 72 | 0.120 |
| SB-15 | SB-15-1 | surface | 4/26/16 | <10 | 1.6 | 98 | <1.0 | <1.0 | 11 | 8.0 | 12 | <3.0 | <5.0 | 6.9 | <0.50 | <1.0 | <5.0 | 44 | 53 | 0.078 |
| SB-16 | SB-16-1 | surface | 4/26/16 | <10 | 1.8 | 80 | <1.0 | <1.0 | 9.4 | 7.2 | 11 | <3.0 | <5.0 | 6.3 | <0.50 | <1.0 | <5.0 | 37 | 62 | 0.042 |
| USEPA RSL, Residential Soil | | | | 31 | 0.68 | 15,000 | 160 | 71 | -- | 23 | 3,100 | 400 | 390 | 670 | 390 | 390 | 0.78 | 390 | 2,300 | 11 |
| USEPA RSL, Industrial Soil | | | | 470 | 3.0 | 220,000 | 2,300 | 980 | -- | 350 | 47,000 | 800 | 5,800 | 8,100 | 5,800 | 5,800 | 12 | 5,800 | 35,000 | 46 |
| ESL - Residential Land Use | | | | 31 | 0.67 | 3,000 | 42 | 39 | -- | 23 | 3,100 | 80 | 390 | 86 | 390 | 390 | 0.78 | 390 | 23,000 | 13 |
| ESL - Industrial Land Use | | | | 470 | 0.31 | 220,000 | 2,200 | 580 | -- | 350 | 47,000 | 320 | 5,800 | 11,000 | 5,800 | 5,800 | 12 | 5800 | 350,000 | 190 |
| OEHHA, Residential Scenario | | | | 30 | 0.07 | 5,200 | 16 | 1.7 | -- | 660 | 3,000 | 80 | 380 | -- | 380 | 380 | 5 | 530 | 23,000 | 18 |
| OEHHA, Industrial Scenario | | | | 380 | 0.24 | 63,000 | 190 | 7.5 | -- | 3,200 | 38,000 | 320 | 4,800 | -- | 4,800 | 4,800 | 63 | 6,700 | 100,000 | 180 |

**Notes:**

ND = Constituents not detected at or above their respective laboratory method reporting limit as reported in Appendix D
mg/kg = milligrams per kilogram
ft bgs = feet below ground surface
USEPA RSL = United States Environmental Protection Agency Regional Screening Level (May 2016)
**Blue** = Exceeds USEPA RSL, Residential Soil
**Red** = Exceeds USEPA RSL, Industrial Soil
SFRWQCB ESLs = San Francisco Regional Water Quality Control Board Environmental Screening Levels - Shallow Soils (<3m bgs)
= Exceeds ESLs
-- = Not applicable or established

OEHHA Screening Levels = Office of Environmental Health Hazard Assessment Screening Levels
= Exceeds OEHHA Screening Levels (Residential)
= Exceeds OEHHA Screening Levels (Industrial)

**TABLE 4**
**Summary and Comparison of Background Metals Concentrations**
800 Air Way, Glendale, California

| Metals | Concentrations (mg/kg) | | | | | | | | | | | | |
|---|---|---|---|---|---|---|---|---|---|---|---|---|---|
| | **Source: USGS 1984** Western U.S. | | | **Source: Kearney Foundation 1996** California (Agricultural Soils) | | | **Source: Cal-EPA 1991** California (Agricultural Soils) | | | **Source: Cal-EPA 1992** Southern California | | | **Source:** 800 Air Way, Glendale, California |
| | **Minimum** | **Geometric Mean** | **Maximum** | **Minimum** | **Geometric Mean** | **Maximum** | **Minimum** | **Geometric Mean** | **Maximum** | **Minimum** | **Geometric Mean** | **Maximum** | **Maximum** |
| Antimony (Sb) | < 1 | 0.47 | **2.6** | 0.15 | 0.5 | **1.95** | NE | NE | NE | 0.12 | NR | **1.90** | <10 |
| Arsenic (As) | < 0.10 | 5.5 | **97** | 0.6 | 2.8 | **11.0** | 1.4 | 6.2 | **20.3** | 1.8 | NR | **15.2** | **11** |
| Barium (Ba) | 70 | 580 | **5,000** | 133 | 468 | **1400** | 146 | 424 | **974** | 23 | NR | **560** | **230** |
| Beryllium (Be) | < 1 | 0.68 | **15** | 0.25 | 1.14 | **2.70** | NE | NE | NE | < 0.1 | NR | **1.2** | <1.0 |
| Cadmium (Cd) | NE | NE | **NE** | 0.05 | 0.26 | **1.70** | 0.04 | 0.15 | **1.29** | 0.05 | NR | **1.45** | **3.0** |
| Chromium (Cr) | 3 | 41 | **2000** | 23 | 76 | **1579** | 23 | 76 | **1579** | 5.8 | NR | **32.6** | **30** |
| Cobalt (Co) | < 3 | 7.1 | **50** | 2.7 | 12.6 | **46.9** | 2.7 | 12.6 | **46.9** | 1.6 | NR | **23.2** | **15** |
| Copper (Cu) | 2 | 21 | **300** | 9.1 | 24.0 | **96.4** | 9.9 | 33 | **164.6** | 3.8 | NR | **54.0** | **68** |
| Lead (Pb) | < 10 | 17 | **700** | 12.4 | 21.7 | **97.1** | 8.5 | 13.8 | **28.7** | 2.5 | NR | **189.4** | **220** |
| Mercury (Hg) | < 0.01 | 0.46 | **4.6** | 0.10 | 0.20 | **0.90** | NE | NE | NE | 0.10 | NR | **0.60** | **0.31** |
| Molybdenum (Mo) | < 3 | 0.85 | **7** | 0.1 | 0.9 | **9.6** | NE | NE | NE | 0.15 | NR | **1.40** | <5.0 |
| Nickel (Ni) | < 5 | 15 | **700** | 9 | 36 | **509** | 9 | 36 | **509** | 3.5 | NR | **28.2** | **26** |
| Selenium (Se) | < 0.1 | 0.23 | **4.3** | 0.015 | 0.028 | **0.430** | < 0.1 | 0.26 | **1.3** | NE | NE | NE | <0.50 |
| Silver (Ag) | NE | NE | **NE** | 0.10 | 0.41 | **8.30** | NE | NE | NE | 0.07 | NR | **0.75** | <1.0 |
| Thallium (Th) | 2.4 | 9.1 | **31** | 5.3 | 13.8 | **36.2** | NE | NE | NE | 0.05 | NR | **35.0** | <5.0 |
| Vanadium (V) | 7 | 70 | **500** | 39 | 101 | **288** | 39 | 102 | **288** | 18 | NR | **84.8** | **69** |
| Zinc (Zn) | 10 | 55 | **2,100** | 88 | 145 | **236** | 13 | 123 | **354** | 10.3 | NR | **247.0** | **290** |

**Notes:**
NA - Not Evaluated
NR = Not Reported
USGS 1984: Element Concentrations in Soils and Other Surficial Materials of the Conterminous United States, U.S. Geological Survey Professional Paper 1270 by H.T. Shackette and J. G. Boerngen (Western U.S. Data)
Kearney Foundation 1996: Background Concentrations of Trace and Major Elements in California Soils, Kearney Foundation of Soil Science, Division of Agriculture and Natural Resources, University of California
Cal-EPA 1991: Background Levels of Trace Elements in Southern California Soils, Draft Annual Report, California Environmental Protection Agency, Contract No. 89-T0081 by University of California, Riverside, California, April 1991 (Agricultural soils)
Cal-EPA 1992: Background Levels of Trace Elements in Southern California Soils, Draft Annual Report, California Environmental Protection Agency, Contract No. 89-T0081 by University of California, Riverside, California, June 1992 (Composite samples from various depths)

# TABLE 5
## SOIL VAPOR ANALYTICAL RESULTS - VOCs
800 Air Way, Glendale, California

| Location | Sample ID | Sample Depth (ft bgs) | Date | EPA Method TO-15 (µg/L) | | | | | | | | | | | | | | | | | | | | | | | | | |
|---|---|---|---|---|---|---|---|---|---|---|---|---|---|---|---|---|---|---|---|---|---|---|---|---|---|---|---|---|---|
| | | | | Acetone | Carbon Tetrachloride | Chloroform | 2-Butanone | 1,1-DCE | cis-1,2-DCE | Ethanol | Ethylbenzene | 4-Ethyltoluene | Heptane | n-Hexane | R113 | 2,2,4-Trimethylpentane | IPA* | MIBK | Propylene | n-Propylbenzene | Styrene | PCE | TCE | THF | 1,2,4-TMB | 1,3,5-TMB | Toluene | o-Xylene | m,p-Xylenes |
| SB-6 | SB-6-5-SV | 5 | 5/2/2016 | ND | ND | ND | ND | ND | ND | ND | ND | ND | ND | ND | ND | ND | ND | ND | ND | ND | ND | ND | ND | **0.010** | ND | ND | ND | ND | **0.013** |
| | SB-6-15-SV | 15 | | ND | ND | ND | ND | ND | ND | ND | ND | ND | **0.029** | **0.064** | ND | ND | ND | ND | **0.077** | ND | ND | **0.024** | ND | ND | ND | ND | **0.021** | ND | **ND** |
| | SB-6-30-SV | 30 | | **0.021** | ND | **0.029** | **0.027** | ND | ND | ND | **0.037** | **0.022** | ND | ND | **0.010** | ND | ND | **0.010** | ND | **0.016** | ND | **0.096** | ND | **0.021** | **0.084** | **0.036** | **0.088** | **0.068** | **0.16** |
| SB-8 | SB-8-5-SV | 5 | 5/2/2016 | ND | ND | **0.24** | ND | ND | ND | ND | ND | ND | ND | ND | ND | **0.036** | ND | ND | **0.20** | ND | ND | ND | ND | ND | ND | ND | **0.022** | ND | **0.027** |
| | SB-8-15-SV | 15 | | ND | ND | **0.10** | ND | ND | ND | ND | ND | ND | ND | ND | ND | ND | ND | ND | ND | ND | ND | **0.17** | ND | ND | **0.17** | ND | **0.29** | **0.14** | **0.40** |
| | SB-8-30-SV | 30 | | ND | ND | ND | ND | **2.0** | ND | ND | ND | ND | ND | ND | ND | ND | ND | ND | ND | ND | ND | **1.4** | **7.1** | ND | ND | ND | ND | ND | **0.42** |
| SB-12 | SB-12-5-SV | 5 | 5/2/2016 | ND | ND | ND | ND | ND | ND | ND | ND | ND | ND | ND | ND | ND | ND | ND | ND | ND | ND | **0.61** | ND | ND | ND | ND | **0.021** | ND | **0.021** |
| | SB-12-15-SV | 15 | | ND | ND | ND | ND | **0.053** | ND | ND | ND | ND | ND | ND | ND | ND | ND | ND | ND | ND | ND | **1.2** | **0.32** | ND | ND | ND | ND | ND | ND |
| | SB-12-30-SV | 30 | | ND | ND | ND | ND | **2.4** | ND | ND | ND | ND | ND | ND | ND | ND | ND | ND | ND | ND | ND | **1.6** | **9.1** | ND | ND | ND | ND | ND | ND |
| SB-14 | SB-14-5-SV | 5 | 5/2/2016 | ND | ND | ND | ND | **0.25** | ND | ND | ND | ND | ND | ND | ND | ND | ND | ND | ND | ND | ND | **0.55** | **2.5** | ND | ND | ND | ND | ND | ND |
| | SB-14-15-SV | 15 | | ND | ND | ND | ND | **1.1** | ND | ND | ND | ND | ND | ND | ND | ND | ND | ND | ND | ND | ND | **1.0** | **7.2** | ND | ND | ND | ND | ND | ND |
| SB-15 | SB-15-5-SV | 5 | 5/2/2016 | ND | ND | ND | ND | **0.61** | ND | ND | ND | ND | ND | ND | ND | ND | ND | ND | ND | ND | ND | **0.55** | **4.5** | ND | ND | ND | ND | ND | ND |
| | SB-15-11-SV | 11 | | ND | ND | ND | ND | **1.1** | ND | ND | ND | ND | ND | ND | ND | ND | ND | ND | ND | ND | ND | **0.75** | **6.6** | ND | ND | ND | ND | ND | ND |
| SB-16 | SB-16-5-SV | 5 | 5/2/2016 | ND | ND | ND | ND | ND | ND | ND | ND | ND | ND | ND | ND | ND | **0.054** | ND | ND | ND | **0.031** | **0.93** | **0.25** | ND | ND | ND | ND | ND | ND |
| | SB-16-11-SV | 11 | | ND | **0.025** | **0.028** | ND | **0.043** | **0.036** | **0.028** | ND | ND | ND | ND | **0.023** | ND | **0.031** | ND | ND | ND | **0.083** | **1.1** | **0.87** | ND | ND | ND | ND | ND | ND |
| **SFRWQCB ESLs** | | | | **15,000** | **0.033** | **0.061** | **--** | **37** | **4.2** | **--** | **0.56** | **--** | **--** | **--** | **--** | **--** | **--** | **--** | **--** | **--** | **470** | **0.24** | **--** | **--** | **--** | **--** | **--** | **--** | **--** |

**Notes:**

µg/L = micrograms per Liter

ND = Constituents not detected at or above their respective laboratory method reporting limit as reported in Appendix D

-- = Not Established

ft bgs = feet below ground surface

SFRWQCB ESLs = San Francisco Regional Water Quality Control Board Environmental Screening Levels

= Exceeds ESL

PCE =Tetrchloroethylene

TCE =Trichloroethylene

THF =Tetrahydrofuran

1,2,4 TMB =1,2,4- Trimethylbenzene

1,3,5-TMB = 1,3,5-Trimethylbenzene

*IPA was used as leak check

**TABLE 6**
**HERO VAPOR INTRUSION MODEL CACULATIONS**
800 Air Way, Glendale, California

| Analyte | Boring Number | Concentration (µg/L) | | Cancer Risk | Non Cancer Hazard |
|---|---|---|---|---|---|
| Acetone (67-64-1) | SB-6-30-SV | 0.021 | HERO RD | NA | 1.4E-07 |
| | | | HERO COM | NA | 1.7E-08 |
| Carbon Tetrachloride (56-23-5) | SB-16-11-SV | 0.025 | HERO RD | 1.0E-07 | 1.6E-04 |
| | | | HERO COM | 1.2E-08 | 1.9E-05 |
| Chloroform (67-66-3) | SB-6-30-SV | 0.029 | HERO RD | 3.3E-08 | 3.9E-05 |
| | | | HERO COM | 3.7E-09 | 4.6E-06 |
| | SB-8-5-SV | 0.24 | HERO RD | 1.4E-06 | 1.6E-03 |
| | | | HERO COM | 1.5E-07 | 1.9E-04 |
| | SB-8-15-SV | 0.10 | HERO RD | 2.2E-07 | 2.6E-04 |
| | | | HERO COM | 2.5E-08 | 3.1E-05 |
| | SB-16-11-SV | 0.028 | HERO RD | 8.1E-08 | 9.6E-05 |
| | | | HERO COM | 9.2E-09 | 1.1E-05 |
| 2-Butanone (78-93-3) | SB-6-30-SV | 0.027 | HERO RD | NA | 8.5E-07 |
| | | | HERO COM | NA | 1.0E-07 |
| 1,1-DCE (75-35-4) | SB-8-30-SV | 2.0 | HERO RD | NA | 4.2E-03 |
| | | | HERO COM | NA | 5.0E-04 |
| | SB-12-15-SV | 0.053 | HERO RD | NA | 2.1E-04 |
| | | | HERO COM | NA | 2.5E-05 |
| | SB-12-30-SV | 2.4 | HERO RD | NA | 5.0E-03 |
| | | | HERO COM | NA | 6.0E-04 |
| | SB-14-5-SV | 0.25 | HERO RD | NA | 2.6E-03 |
| | | | HERO COM | NA | 3.0E-04 |
| | SB-14-15-SV | 1.1 | HERO RD | NA | 4.4E-03 |
| | | | HERO COM | NA | 5.3E-04 |
| | SB-15-5-SV | 0.61 | HERO RD | NA | 6.2E-03 |
| | | | HERO COM | NA | 7.4E-04 |
| | SB-15-11-SV | 1.1 | HERO RD | NA | 5.8E-03 |
| | | | HERO COM | NA | 6.9E-04 |
| | SB-16-11-SV | 0.043 | HERO RD | NA | 2.3E-04 |
| | | | HERO COM | NA | 2.7E-05 |
| cis-1,2-DCE (156-59-2) | SB-16-11-SV | 0.036 | HERO RD | NA | 1.9E-03 |
| | | | HERO COM | NA | 2.3E-04 |
| Ethylbenzene (100-41-4) | SB-6-30-SV | 0.037 | HERO RD | 4.1E-09 | 4.4E-06 |
| | | | HERO COM | 4.6E-10 | 5.2E-07 |
| n-Hexane (110-54-3) | SB-6-15-SV | 0.064 | HERO RD | NA | 2.2E-05 |
| | | | HERO COM | NA | 2.6E-06 |
| R113 (76-13-1) | SB-6-30-SV | 0.010 | HERO RD | NA | 2.2E-08 |
| | | | HERO COM | NA | 2.6E-09 |
| | SB-16-11-SV | 0.023 | HERO RD | NA | 1.4E-07 |
| | | | HERO COM | NA | 1.6E-08 |
| MIBK (108-10-1) | SB-6-30-SV | 0.010 | HERO RD | NA | 4.0E-07 |
| | | | HERO COM | NA | 4.8E-08 |
| n-Propylbenzene (103-65-1) | SB-6-30-SV | 0.016 | HERO RD | NA | 1.7E-06 |
| | | | HERO COM | NA | 2.0E-07 |
| Styrene (100-42-5) | SB-16-5-SV | 0.031 | HERO RD | NA | 2.1E-05 |
| | | | HERO COM | NA | 2.9E-06 |
| | SB-16-11-SV | 0.083 | HERO RD | NA | 2.9E-05 |
| | | | HERO COM | NA | 3.5E-06 |

**TABLE 11**
**SOIL VAPOR RESULTS - HERO VAPOR INTRUSION MODEL**
800 Air Way, Glendale, California

| Analyte | Boring Number | Concentration (µg/L) | | Cancer Risk | Non Cancer Hazard |
|---|---|---|---|---|---|
| PCE (127-18-4) | SB-6-15-SV | 0.024 | HERO RD | 9.1E-09 | 1.2E-04 |
| | | | HERO COM | 1.0E-09 | 1.4E-05 |
| | SB-6-30-SV | 0.096 | HERO RD | 1.9E-08 | 2.4E-04 |
| | | | HERO COM | 2.1E-09 | 2.9E-05 |
| | SB-8-15-SV | 0.17 | HERO RD | 6.4E-08 | 8.4E-04 |
| | | | HERO COM | 7.4E-09 | 1.0E-04 |
| | SB-8-30-SV | 1.4 | HERO RD | 2.7E-07 | 3.5E-03 |
| | | | HERO COM | 3.1E-08 | 4.2E-04 |
| | SB-12-5-SV | 0.61 | HERO RD | 6.4E-07 | 8.4E-03 |
| | | | HERO COM | 7.3E-08 | 9.9E-04 |
| | SB-12-15-SV | 1.2 | HERO RD | 4.5E-07 | 5.9E-03 |
| | | | HERO COM | 5.2E-08 | 7.1E-04 |
| | SB-12-30-SV | 1.6 | HERO RD | 3.1E-07 | 4.0E-03 |
| | | | HERO COM | 3.5E-08 | 4.8E-04 |
| | SB-14-5-SV | 0.55 | HERO RD | 5.8E-07 | 7.5E-03 |
| | | | HERO COM | 6.6E-08 | 9.0E-04 |
| | SB-14-15-SV | 1.0 | HERO RD | 3.8E-07 | 4.9E-03 |
| | | | HERO COM | 4.3E-08 | 5.9E-04 |
| | SB-15-5-SV | 0.55 | HERO RD | 5.8E-07 | 7.5E-03 |
| | | | HERO COM | 6.6E-08 | 9.0E-04 |
| | SB-15-11-SV | 0.75 | HERO RD | 3.8E-07 | 5.0E-03 |
| | | | HERO COM | 4.4E-08 | 5.9E-04 |
| | SB-16-5-SV | 0.93 | HERO RD | 9.8E-07 | 1.3E-02 |
| | | | HERO COM | 1.1E-07 | 1.5E-03 |
| | SB-16-11-SV | 1.1 | HERO RD | 5.6E-07 | 7.3E-03 |
| | | | HERO COM | 6.4E-08 | 8.7E-04 |
| TCE (79-01-6) | SB-8-30-SV | 7.1 | HERO RD | 1.3E-06 | 4.2E-01 |
| | | | HERO COM | 1.5E-07 | 5.0E-02 |
| | SB-12-15-SV | 0.32 | HERO RD | 1.1E-07 | 3.7E-02 |
| | | | HERO COM | 1.3E-08 | 4.4E-03 |
| | SB-12-30-SV | 9.1 | HERO RD | 1.6E-06 | 5.4E-01 |
| | | | HERO COM | 1.9E-07 | 6.4E-02 |
| | SB-14-5-SV | 2.5 | HERO RD | 2.3E-06 | 7.6E-01 |
| | | | HERO COM | 2.6E-07 | 9.0E-02 |
| | SB-14-15-SV | 7.2 | HERO RD | 2.5E-06 | 8.2E-01 |
| | | | HERO COM | 2.9E-07 | 9.8E-02 |
| | SB-15-5-SV | 4.5 | HERO RD | 4.2E-06 | 1.4E+00 |
| | | | HERO COM | 4.8E-07 | 1.6E-01 |
| | SB-15-11-SV | 6.6 | HERO RD | 3.1E-06 | 1.0E+00 |
| | | | HERO COM | 3.5E-07 | 1.2E-01 |
| | SB-16-5-SV | 0.25 | HERO RD | 2.3E-07 | 7.6E-02 |
| | | | HERO COM | 2.6E-08 | 9.0E-03 |
| | SB-16-11-SV | 0.87 | HERO RD | 4.0E-07 | 1.3E-01 |
| | | | HERO COM | 4.6E-08 | 1.6E-02 |
| THF (109-99-9) | SB-6-5-SV | 0.010 | HERO RD | NA | 3.9E-06 |
| | | | HERO COM | NA | 4.6E-07 |
| | SB-6-30-SV | 0.021 | HERO RD | NA | 1.7E-06 |
| | | | HERO COM | NA | 2.0E-07 |
| 1,2,4-TMB (95-63-6) | SB-6-30-SV | 0.084 | HERO RD | NA | 1.3E-03 |
| | | | HERO COM | NA | 1.5E-04 |
| | SB-8-15-SV | 0.17 | HERO RD | NA | 5.0E-03 |
| | | | HERO COM | NA | 5.9E-04 |
| 1,3,5-TMB (108-67-8) | SB-6-30-SV | 0.036 | HERO RD | NA | 1.1E-04 |
| | | | HERO COM | NA | 1.3E-05 |

**TABLE 11**
**SOIL VAPOR RESULTS - HERO VAPOR INTRUSION MODEL**
800 Air Way, Glendale, California

| Analyte | Boring Number | Concentration (µg/L) | | Cancer Risk | Non Cancer Hazard |
|---|---|---|---|---|---|
| Toluene (108-88-3) | SB-6-15-SV | 0.021 | HERO RD | NA | 1.8E-05 |
| | | | HERO COM | NA | 2.1E-06 |
| | SB-6-30-SV | 0.088 | HERO RD | NA | 3.9E-05 |
| | | | HERO COM | NA | 4.7E-06 |
| | SB-8-5-SV | 0.022 | HERO RD | NA | 4.9E-05 |
| | | | HERO COM | NA | 5.8E-06 |
| | SB-8-15-SV | 0.29 | HERO RD | NA | 2.5E-04 |
| | | | HERO COM | NA | 2.9E-05 |
| | SB-12-5-SV | 0.021 | HERO RD | NA | 4.7E-05 |
| | | | HERO COM | NA | 5.5E-06 |
| o-Xylene (95-47-6) | SB-6-30-SV | 0.068 | HERO RD | NA | 8.1E-05 |
| | | | HERO COM | NA | 9.6E-06 |
| | SB-8-15-SV | 0.14 | HERO RD | NA | 3.2E-04 |
| | | | HERO COM | NA | 3.8E-05 |

**TABLE 1**
**Soil Analytical Results - Volatile Organic Compounds (VOCs)**
800 Air Way, Glendale, California

| Boring Number | Sample Depth (ft bgs) | Sample Number | Sample Date | 8260B (mg/kg) | | | | | |
|---|---|---|---|---|---|---|---|---|---|
| | | | | Acetone | Benzene | Toluene | m,p-Xylenes | TCE | Other VOCs |
| SB-1 | 5 | SB-1-5 | 4/29/16 | ND | ND | ND | ND | ND | ND |
| | 10 | SB-1-10 | | ND | ND | ND | ND | ND | ND |
| SB-2 | 10 | SB-2-10 | 4/29/16 | ND | ND | ND | ND | ND | ND |
| | 20 | SB-2-20 | | ND | ND | ND | ND | ND | ND |
| SB-3 | 35 | SB-3-35 | 4/28/16 | ND | ND | ND | ND | ND | ND |
| | 40 | SB-3-40 | | ND | ND | ND | **0.0024** | ND | ND |
| SB-4 | 10 | SB-4-10 | 4/29/16 | ND | ND | ND | ND | ND | ND |
| | 20 | SB-4-20 | | ND | ND | ND | ND | ND | ND |
| SB-5 | 20 | SB-5-20 | 4/28/16 | ND | ND | ND | ND | ND | ND |
| | 30 | SB-5-30 | | ND | ND | ND | ND | ND | ND |
| SB-6 | 10 | SB-6-10 | 4/27/16 | ND | ND | ND | ND | ND | ND |
| | 35 | SB-6-35 | | ND | ND | ND | ND | ND | ND |
| SB-7 | 10 | SB-7-10 | 4/27/16 | ND | ND | ND | ND | ND | ND |
| | 15 | SB-7-15 | | ND | ND | ND | ND | ND | ND |
| SB-8 | 20 | SB-8-20 | 4/27/16 | ND | ND | ND | ND | ND | ND |
| | 25 | SB-8-25 | | ND | ND | ND | ND | ND | ND |
| SB-9 | 5 | SB-9-5 | 4/28/16 | ND | **0.0040** | **0.0021** | ND | **0.0064** | ND |
| | 10 | SB-9-10 | | ND | **0.0098** | **0.0067** | **0.0030** | **0.0052** | ND |
| SB-10 | 10 | SB-10-10 | 4/29/16 | ND | ND | ND | ND | ND | ND |
| | 15 | SB-10-15 | | **0.29** | ND | ND | ND | **0.0052** | ND |
| SB-11 | 5 | SB-11-5 | 4/28/16 | ND | ND | ND | ND | ND | ND |
| | 35 | SB-11-35 | | ND | ND | ND | ND | ND | ND |
| SB-12 | 20 | SB-12-20 | 4/27/16 | ND | ND | ND | ND | ND | ND |
| | 40 | SB-12-40 | | ND | ND | ND | ND | ND | ND |
| SB-13 | 5 | SB-13-5 | 4/29/16 | ND | ND | ND | ND | ND | ND |
| | 15 | SB-13-15 | | ND | ND | ND | ND | ND | ND |
| SB-14 | 5 | SB-14-5 | 4/26/16 | ND | ND | ND | ND | ND | ND |
| | 15 | SB-14-15 | | ND | ND | ND | ND | ND | ND |
| SB-15 | 5 | SB-15-5 | 4/26/16 | ND | ND | ND | ND | ND | ND |
| | 11 | SB-15-11 | | ND | ND | ND | ND | ND | ND |
| SB-16 | 5 | SB-16-5 | 4/26/16 | ND | ND | ND | ND | ND | ND |
| | 11 | SB-16-11 | | ND | ND | ND | ND | ND | ND |
| **USEPA RSL, Residential Soil** | | | | **61,000** | **1.2** | **4,900** | **1,110** | **0.94** | **--** |
| **USEPA RSL, Industrial Soil** | | | | **670,000** | **5.1** | **47,000** | **4,800** | **6.0** | **--** |
| **SFRWQCB ESL** | | | | **0.50** | **0.044** | **2.90** | **2.3** | **--** | **--** |
| **OEHHA, Residential Scenario** | | | | **--** | **--** | **--** | **--** | **--** | **--** |
| **OEHHA, Industrial Scenario** | | | | **--** | **--** | **--** | **--** | **--** | **--** |

**Notes:**

ND = Constituents not detected at or above their respective laboratory method reporting limit as reported in Appendix D

mg/kg = milligrams per kilogram

ft bgs = feet below ground surface

USEPA RSL = United States Environmental Protection Agency Regional Screening Level (May 2016)

**Blue** = Exceeds USEPA RSL, Residential Soil

**Red** = Exceeds USEPA RSL, Industrial Soil

SFRWQCB ESLs = San Francisco Regional Water Quality Control Board Environmental Screening Levels - Tier 1

= Exceeds ESLs

NA = Not applicable

-- = Not Established

OEHHA Screening Levels = Office of Environmental Health Hazard Assessment Screening Levels

= Exceeds OEHHA Screening Levels (Residential)

= Exceeds OEHHA Screening Levels (Industrial)

**TABLE 2**
**Soil Analytical Results - Total Petroleum Hydrocarbons (TPH)**
800 Air Way, Glendale, California

| Boring Number | Sample Depth (ft bgs) | Sample Number | Sample Date | EPA 8015B(M) (mg/kg) | | | | | | | | | | | | | | | | |
|---|---|---|---|---|---|---|---|---|---|---|---|---|---|---|---|---|---|---|---|---|
| | | | | C6-C8 | C8-C10 | C10-C12 | C12-C14 | C14-C16 | C16-C18 | C18-C20 | C20-C22 | C22-C24 | C24-C26 | C26-C28 | C28-C32 | C32-C34 | C34-C36 | C36-C40 | C40-C44 | TPH (C6-C44) |
| **SB-1** | 5 | SB-1-5 | 4/29/16 | <1.0 | <1.0 | <1.0 | <1.0 | <1.0 | **2.6** | **5.6** | **9.6** | **18** | **18** | **33** | **96** | **26** | **23** | **37** | **11** | **280** |
| | 10 | SB-1-10 | | <10 | <10 | <10 | **36** | **170** | **310** | **440** | **620** | **800** | **1,000** | **1,200** | **2,500** | **640** | **280** | **440** | **270** | **8,700** |
| **SB-2** | 10 | SB-2-10 | 4/29/16 | <1.0 | <1.0 | <1.0 | <1.0 | <1.0 | <1.0 | <1.0 | <1.0 | <1.0 | <1.0 | <1.0 | <1.0 | <1.0 | <1.0 | <1.0 | <1.0 | <10 |
| | 20 | SB-2-20 | | <1.0 | **2.7** | <1.0 | <1.0 | **1.1** | <1.0 | <1.0 | <1.0 | <1.0 | <1.0 | **1.8** | <1.0 | <1.0 | <1.0 | <1.0 | <1.0 | <10 |
| **SB-3** | 35 | SB-3-35 | 4/28/16 | <1.0 | <1.0 | <1.0 | <1.0 | **3.2** | <1.0 | <1.0 | <1.0 | <1.0 | <1.0 | <1.0 | <1.0 | <1.0 | <1.0 | <1.0 | <1.0 | <10 |
| | 40 | SB-3-40 | | <1.0 | <1.0 | <1.0 | <1.0 | **2.1** | <1.0 | <1.0 | <1.0 | <1.0 | <1.0 | <1.0 | <1.0 | <1.0 | <1.0 | <1.0 | <1.0 | <10 |
| **SB-4** | 10 | SB-4-10 | 4/29/16 | <1.0 | <1.0 | <1.0 | <1.0 | <1.0 | <1.0 | <1.0 | <1.0 | <1.0 | <1.0 | <1.0 | **1.0** | <1.0 | <1.0 | <1.0 | <1.0 | <10 |
| | 20 | SB-4-20 | | <1.0 | <1.0 | <1.0 | <1.0 | <1.0 | <1.0 | <1.0 | <1.0 | <1.0 | <1.0 | <1.0 | <1.0 | <1.0 | <1.0 | <1.0 | <1.0 | <10 |
| **SB-5** | 20 | SB-5-20 | 4/28/16 | <1.0 | <1.0 | <1.0 | <1.0 | **2.6** | <1.0 | <1.0 | <1.0 | <1.0 | <1.0 | **1.1** | **2.7** | **1.1** | <1.0 | **1.4** | <1.0 | **10** |
| | 30 | SB-5-30 | | <1.0 | <1.0 | <1.0 | <1.0 | <1.0 | <1.0 | <1.0 | <1.0 | <1.0 | <1.0 | <1.0 | <1.0 | <1.0 | <1.0 | <1.0 | <1.0 | <10 |
| **SB-6** | 10 | SB-6-10 | 4/27/16 | <1.0 | <1.0 | <1.0 | <1.0 | <1.0 | <1.0 | <1.0 | **1.2** | **1.3** | **2.5** | **4.6** | **13** | **5.4** | **5.8** | **11** | **7.2** | **53** |
| | 35 | SB-6-35 | | <1.0 | <1.0 | **1.2** | <1.0 | **2.9** | <1.0 | <1.0 | <1.0 | <1.0 | <1.0 | **1.5** | <1.0 | <1.0 | <1.0 | <1.0 | <1.0 | <10 |
| **SB-7** | 10 | SB-7-10 | 4/27/16 | <1.0 | <1.0 | **1.1** | <1.0 | **4.4** | <1.0 | <1.0 | <1.0 | <1.0 | **1.0** | <1.0 | **1.0** | <1.0 | <1.0 | <1.0 | <1.0 | <10 |
| | 15 | SB-7-15 | | <1.0 | <1.0 | <1.0 | <1.0 | **2.1** | **3.8** | **6.2** | **13** | **14** | **18** | **20** | **39** | **16** | **14** | **21** | **12** | **180** |
| **SB-8** | 20 | SB-8-20 | 4/27/16 | <1.0 | <1.0 | <1.0 | <1.0 | **1.9** | **1.7** | <1.0 | <1.0 | <1.0 | <1.0 | <1.0 | **1.4** | <1.0 | <1.0 | <1.0 | <1.0 | <10 |
| | 25 | SB-8-25 | | <100 | <100 | **220** | **680** | **1,200** | **1,200** | **1,300** | **2,200** | **2,500** | **2,600** | **3,100** | **5,400** | **2,100** | **1,500** | **1,800** | **1,000** | **27,000** |
| **SB-9** | 5 | SB-9-5 | 4/28/16 | <1.0 | <1.0 | **1.4** | <1.0 | <1.0 | <1.0 | <1.0 | <1.0 | <1.0 | **1.0** | **2.3** | **5.0** | **3.1** | **2.1** | **5.4** | <1.0 | **20** |
| | 10 | SB-9-10 | | <1.0 | <1.0 | <1.0 | <1.0 | <1.0 | <1.0 | <1.0 | <1.0 | <1.0 | <1.0 | <1.0 | **1.2** | <1.0 | <1.0 | <1.0 | <1.0 | <10 |
| **SB-10** | 10 | SB-10-10 | 4/29/16 | <5.0 | <5.0 | <5.0 | <5.0 | <5.0 | <5.0 | **13** | **24** | **49** | **62** | **80** | **200** | **76** | **40** | **48** | **20** | **610** |
| | 15 | SB-10-15 | | <1.0 | **1.6** | **1.3** | **3.0** | <1.0 | <1.0 | <1.0 | <1.0 | <1.0 | <1.0 | <1.0 | <1.0 | <1.0 | <1.0 | <1.0 | <1.0 | <10 |
| **SB-11** | 5 | SB-11-5 | 4/28/16 | <1.0 | <1.0 | <1.0 | <1.0 | <1.0 | <1.0 | <1.0 | <1.0 | <1.0 | <1.0 | **1.2** | **3.3** | **1.5** | **1.0** | **2.9** | <1.0 | <10 |
| | 35 | SB-11-35 | | <1.0 | <1.0 | <1.0 | **1.2** | **2.1** | <1.0 | <1.0 | <1.0 | <1.0 | <1.0 | **2.3** | **1.2** | <1.0 | <1.0 | <1.0 | <1.0 | <10 |
| **SB-12** | 20 | SB-12-20 | 4/27/16 | <1.0 | <1.0 | <1.0 | <1.0 | <1.0 | <1.0 | <1.0 | <1.0 | <1.0 | <1.0 | **1.1** | <1.0 | <1.0 | <1.0 | <1.0 | <1.0 | <10 |
| | 40 | SB-12-40 | | <1.0 | <1.0 | <1.0 | <1.0 | <1.0 | <1.0 | <1.0 | <1.0 | <1.0 | <1.0 | **3.3** | **1.8** | <1.0 | <1.0 | <1.0 | <1.0 | <10 |
| **SB-13** | 5 | SB-13-5 | 4/29/16 | <1.0 | **1.0** | <1.0 | <1.0 | <1.0 | <1.0 | <1.0 | <1.0 | <1.0 | <1.0 | <1.0 | <1.0 | <1.0 | <1.0 | <1.0 | <1.0 | <10 |
| | 15 | SB-13-15 | | <1.0 | <1.0 | <1.0 | <1.0 | **1.4** | <1.0 | <1.0 | <1.0 | <1.0 | <1.0 | <1.0 | <1.0 | <1.0 | <1.0 | <1.0 | <1.0 | <10 |
| **SB-14** | 5 | SB-14-5 | 4/26/16 | <1.0 | <1.0 | <1.0 | <1.0 | <1.0 | <1.0 | <1.0 | <1.0 | <1.0 | <1.0 | <1.0 | <1.0 | <1.0 | <1.0 | <1.0 | <1.0 | <10 |
| | 15 | SB-14-15 | | <1.0 | <1.0 | <1.0 | <1.0 | <1.0 | <1.0 | <1.0 | <1.0 | <1.0 | <1.0 | <1.0 | <1.0 | <1.0 | <1.0 | <1.0 | <1.0 | <10 |
| **SB-15** | 5 | SB-15-5 | 4/26/16 | <1.0 | <1.0 | <1.0 | <1.0 | <1.0 | <1.0 | <1.0 | <1.0 | <1.0 | <1.0 | <1.0 | <1.0 | <1.0 | <1.0 | <1.0 | <1.0 | <10 |
| | 11 | SB-15-11 | | <1.0 | <1.0 | <1.0 | <1.0 | <1.0 | <1.0 | <1.0 | <1.0 | <1.0 | <1.0 | <1.0 | <1.0 | <1.0 | <1.0 | <1.0 | <1.0 | <10 |
| **SB-16** | 5 | SB-16-5 | 4/26/16 | <1.0 | <1.0 | <1.0 | <1.0 | <1.0 | <1.0 | <1.0 | <1.0 | <1.0 | <1.0 | <1.0 | <1.0 | <1.0 | <1.0 | <1.0 | <1.0 | <10 |
| | 11 | SB-16-11 | | <1.0 | <1.0 | <1.0 | <1.0 | <1.0 | <1.0 | <1.0 | <1.0 | <1.0 | <1.0 | <1.0 | <1.0 | <1.0 | <1.0 | <1.0 | <1.0 | <10 |

**Notes:**
TPHcc = Total Petroleum Hydrocarbon Carbon Chain Characterization (C6 - C44)
mg/kg = milligrams per kilogram
ft bgs = feet below ground surface
ND = Constituents not detected at or above their respective laboratory method reporting limit as reported in Appendix D

**TABLE 3**
**Soil Analytical Results - CAM Metals**
800 Air Way, Glendale, California

| Boring Number | Sample Number | Sample Depth (ft bgs) | Sample Date | 6010B (mg/kg) | | | | | | | | | | | | | | | | 7471A (mg/kg) |
|---|---|---|---|---|---|---|---|---|---|---|---|---|---|---|---|---|---|---|---|---|
| | | | | Antimony | Arsenic | Barium | Berylium | Cadmium | Chromium | Cobalt | Copper | Lead | Molybdenum | Nickel | Selenium | Silver | Thallium | Vanadium | Zinc | Mercury |
| SB-1 | SB-1-1 | surface | 4/29/16 | <10 | 1.4 | 90 | <1.0 | <1.0 | 12 | 11 | 30 | 25 | <5.0 | 12 | <0.50 | <1.0 | <5.0 | 37 | 200 | 0.110 |
| SB-2 | SB-2-1 | surface | 4/29/16 | <10 | 1.2 | 48 | <1.0 | <1.0 | 11 | 13 | 4.2 | <3.0 | <5.0 | 7.1 | <0.50 | <1.0 | <5.0 | 68 | 90 | 0.020 |
| SB-3 | SB-3-1 | surface | 4/28/16 | <10 | 11 | 190 | <1.0 | <1.0 | 25 | 15 | 36 | 9.8 | <5.0 | 20 | <0.50 | <1.0 | <5.0 | 69 | 94 | 0.021 |
| SB-4 | SB-4-1 | surface | 4/29/16 | <10 | 0.60 | 180 | <1.0 | <1.0 | 10 | 13 | 19 | 4.0 | <5.0 | 7.6 | <0.50 | <1.0 | <5.0 | 60 | 77 | 0.021 |
| SB-5 | SB-5-1 | surface | 4/28/16 | <10 | 2.3 | 130 | <1.0 | <1.0 | 13 | 9.8 | 16 | 9.2 | <5.0 | 8.6 | <0.50 | <1.0 | <5.0 | 48 | 83 | 0.083 |
| SB-6 | SB-6-1 | surface | 4/27/16 | <10 | 4.4 | 110 | <1.0 | 3.8 | 15 | 8.2 | 41 | 220 | <5.0 | 9.2 | <0.50 | <1.0 | <5.0 | 43 | 290 | 0.310 |
| SB-7 | SB-7-1 | surface | 4/27/16 | <10 | 2.5 | 140 | <1.0 | <1.0 | 30 | 11 | 29 | 49 | <5.0 | 13 | <0.50 | <1.0 | <5.0 | 53 | 170 | 0.080 |
| SB-8 | SB-8-1 | surface | 4/27/16 | <10 | 6.3 | 130 | <1.0 | <1.0 | 22 | 9.8 | 27 | 27 | <5.0 | 26 | <0.50 | <1.0 | <5.0 | 51 | 120 | 0.083 |
| SB-9 | SB-9-1 | surface | 4/28/16 | <10 | 1.8 | 97 | <1.0 | <1.0 | 11 | 7.8 | 13 | 7.5 | <5.0 | 7.6 | <0.50 | <1.0 | <5.0 | 38 | 56 | 0.063 |
| SB-10 | SB-10-1 | surface | 4/29/16 | <10 | 3.6 | 140 | <1.0 | <1.0 | 16 | 13 | 18 | 7.1 | <5.0 | 12 | <0.50 | <1.0 | <5.0 | 58 | 91 | 0.086 |
| SB-11 | SB-11-1 | surface | 4/28/16 | <10 | 3.0 | 110 | <1.0 | <1.0 | 13 | 10 | 17 | 11 | <5.0 | 9.9 | <0.50 | <1.0 | <5.0 | 49 | 76 | 0.088 |
| SB-12 | SB-12-1 | surface | 4/26/16 | <10 | 3.0 | 230 | <1.0 | <1.0 | 12 | 8.8 | 68 | 170 | <5.0 | 17 | <0.50 | <1.0 | <5.0 | 42 | 260 | 0.120 |
| SB-13 | SB-13-1 | surface | 4/29/16 | <10 | 1.5 | 96 | <1.0 | <1.0 | 9.3 | 6.6 | 18 | 56 | <5.0 | 6.6 | <0.50 | <1.0 | <5.0 | 35 | 130 | 0.080 |
| SB-14 | SB-14-1 | surface | 4/26/16 | <10 | 3.6 | 130 | <1.0 | <1.0 | 15 | 11 | 21 | 6.3 | <5.0 | 10 | <0.50 | <1.0 | <5.0 | 57 | 72 | 0.120 |
| SB-15 | SB-15-1 | surface | 4/26/16 | <10 | 1.6 | 98 | <1.0 | <1.0 | 11 | 8.0 | 12 | <3.0 | <5.0 | 6.9 | <0.50 | <1.0 | <5.0 | 44 | 53 | 0.078 |
| SB-16 | SB-16-1 | surface | 4/26/16 | <10 | 1.8 | 80 | <1.0 | <1.0 | 9.4 | 7.2 | 11 | <3.0 | <5.0 | 6.3 | <0.50 | <1.0 | <5.0 | 37 | 62 | 0.042 |
| USEPA RSL, Residential Soil | | | | 31 | 0.68 | 15,000 | 160 | 71 | -- | 23 | 3,100 | 400 | 390 | 670 | 390 | 390 | 0.78 | 390 | 2,300 | 11 |
| USEPA RSL, Industrial Soil | | | | 470 | 3.0 | 220,000 | 2,300 | 980 | -- | 350 | 47,000 | 800 | 5,800 | 8,100 | 5,800 | 5,800 | 12 | 5,800 | 35,000 | 46 |
| ESL - Residential Land Use | | | | 31 | 0.67 | 3,000 | 42 | 39 | -- | 23 | 3,100 | 80 | 390 | 86 | 390 | 390 | 0.78 | 390 | 23,000 | 13 |
| ESL - Industrial Land Use | | | | 470 | 0.31 | 220,000 | 2,200 | 580 | -- | 350 | 47,000 | 320 | 5,800 | 11,000 | 5,800 | 5,800 | 12 | 5800 | 350,000 | 190 |
| OEHHA, Residential Scenario | | | | 30 | 0.07 | 5,200 | 16 | 1.7 | -- | 660 | 3,000 | 80 | 380 | -- | 380 | 380 | 5 | 530 | 23,000 | 18 |
| OEHHA, Industrial Scenario | | | | 380 | 0.24 | 63,000 | 190 | 7.5 | -- | 3,200 | 38,000 | 320 | 4,800 | -- | 4,800 | 4,800 | 63 | 6,700 | 100,000 | 180 |

**Notes:**

ND = Constituents not detected at or above their respective laboratory method reporting limit as reported in Appendix D
mg/kg = milligrams per kilogram
ft bgs = feet below ground surface
USEPA RSL = United States Environmental Protection Agency Regional Screening Level (May 2016)
**Blue** = Exceeds USEPA RSL, Residential Soil
**Red** = Exceeds USEPA RSL, Industrial Soil
SFRWQCB ESLs = San Francisco Regional Water Quality Control Board Environmental Screening Levels - Shallow Soils (<3m bgs)
= Exceeds ESLs
-- = Not applicable or established

OEHHA Screening Levels = Office of Environmental Health Hazard Assessment Screening Levels
= Exceeds OEHHA Screening Levels (Residential)
= Exceeds OEHHA Screening Levels (Industrial)

**TABLE 4**
**Summary and Comparison of Background Metals Concentrations**
800 Air Way, Glendale, California

| Metals | Concentrations (mg/kg) | | | | | | | | | | | | |
|---|---|---|---|---|---|---|---|---|---|---|---|---|---|
| | **Source: USGS 1984** Western U.S. | | | **Source: Kearney Foundation 1996** California (Agricultural Soils) | | | **Source: Cal-EPA 1991** California (Agricultural Soils) | | | **Source: Cal-EPA 1992** Southern California | | | **Source:** 800 Air Way, Glendale, California |
| | **Minimum** | **Geometric Mean** | **Maximum** | **Minimum** | **Geometric Mean** | **Maximum** | **Minimum** | **Geometric Mean** | **Maximum** | **Minimum** | **Geometric Mean** | **Maximum** | **Maximum** |
| Antimony (Sb) | < 1 | 0.47 | **2.6** | 0.15 | 0.5 | **1.95** | NE | NE | NE | 0.12 | NR | **1.90** | <10 |
| Arsenic (As) | < 0.10 | 5.5 | **97** | 0.6 | 2.8 | **11.0** | 1.4 | 6.2 | **20.3** | 1.8 | NR | **15.2** | **11** |
| Barium (Ba) | 70 | 580 | **5,000** | 133 | 468 | **1400** | 146 | 424 | **974** | 23 | NR | **560** | **230** |
| Beryllium (Be) | < 1 | 0.68 | **15** | 0.25 | 1.14 | **2.70** | NE | NE | NE | < 0.1 | NR | **1.2** | <1.0 |
| Cadmium (Cd) | NE | NE | **NE** | 0.05 | 0.26 | **1.70** | 0.04 | 0.15 | **1.29** | 0.05 | NR | **1.45** | **3.0** |
| Chromium (Cr) | 3 | 41 | **2000** | 23 | 76 | **1579** | 23 | 76 | **1579** | 5.8 | NR | **32.6** | **30** |
| Cobalt (Co) | < 3 | 7.1 | **50** | 2.7 | 12.6 | **46.9** | 2.7 | 12.6 | **46.9** | 1.6 | NR | **23.2** | **15** |
| Copper (Cu) | 2 | 21 | **300** | 9.1 | 24.0 | **96.4** | 9.9 | 33 | **164.6** | 3.8 | NR | **54.0** | **68** |
| Lead (Pb) | < 10 | 17 | **700** | 12.4 | 21.7 | **97.1** | 8.5 | 13.8 | **28.7** | 2.5 | NR | **189.4** | **220** |
| Mercury (Hg) | < 0.01 | 0.46 | **4.6** | 0.10 | 0.20 | **0.90** | NE | NE | NE | 0.10 | NR | **0.60** | **0.31** |
| Molybdenum (Mo) | < 3 | 0.85 | **7** | 0.1 | 0.9 | **9.6** | NE | NE | NE | 0.15 | NR | **1.40** | <5.0 |
| Nickel (Ni) | < 5 | 15 | **700** | 9 | 36 | **509** | 9 | 36 | **509** | 3.5 | NR | **28.2** | **26** |
| Selenium (Se) | < 0.1 | 0.23 | **4.3** | 0.015 | 0.028 | **0.430** | < 0.1 | 0.26 | **1.3** | NE | NE | NE | <0.50 |
| Silver (Ag) | NE | NE | **NE** | 0.10 | 0.41 | **8.30** | NE | NE | NE | 0.07 | NR | **0.75** | <1.0 |
| Thallium (Th) | 2.4 | 9.1 | **31** | 5.3 | 13.8 | **36.2** | NE | NE | NE | 0.05 | NR | **35.0** | <5.0 |
| Vanadium (V) | 7 | 70 | **500** | 39 | 101 | **288** | 39 | 102 | **288** | 18 | NR | **84.8** | **69** |
| Zinc (Zn) | 10 | 55 | **2,100** | 88 | 145 | **236** | 13 | 123 | **354** | 10.3 | NR | **247.0** | **290** |

**Notes:**
NA - Not Evaluated
NR = Not Reported
USGS 1984: Element Concentrations in Soils and Other Surficial Materials of the Conterminous United States, U.S. Geological Survey Professional Paper 1270 by H.T. Shackette and J. G. Boerngen (Western U.S. Data)
Kearney Foundation 1996: Background Concentrations of Trace and Major Elements in California Soils, Kearney Foundation of Soil Science, Division of Agriculture and Natural Resources, University of California
Cal-EPA 1991: Background Levels of Trace Elements in Southern California Soils, Draft Annual Report, California Environmental Protection Agency, Contract No. 89-T0081 by University of California, Riverside, California, April 1991 (Agricultural soils)
Cal-EPA 1992: Background Levels of Trace Elements in Southern California Soils, Draft Annual Report, California Environmental Protection Agency, Contract No. 89-T0081 by University of California, Riverside, California, June 1992 (Composite samples from various depths)

# TABLE 5
## SOIL VAPOR ANALYTICAL RESULTS - VOCs
800 Air Way, Glendale, California

| Location | Sample ID | Sample Depth (ft bgs) | Date | EPA Method TO-15 (µg/L) | | | | | | | | | | | | | | | | | | | | | | | | | |
|---|---|---|---|---|---|---|---|---|---|---|---|---|---|---|---|---|---|---|---|---|---|---|---|---|---|---|---|---|---|
| | | | | Acetone | Carbon Tetrachloride | Chloroform | 2-Butanone | 1,1-DCE | cis-1,2-DCE | Ethanol | Ethylbenzene | 4-Ethyltoluene | Heptane | n-Hexane | R113 | 2,2,4-Trimethylpentane | IPA* | MIBK | Propylene | n-Propylbenzene | Styrene | PCE | TCE | THF | 1,2,4-TMB | 1,3,5-TMB | Toluene | o-Xylene | m,p-Xylenes |
| SB-6 | SB-6-5-SV | 5 | 5/2/2016 | ND | ND | ND | ND | ND | ND | ND | ND | ND | ND | ND | ND | ND | ND | ND | ND | ND | ND | ND | ND | **0.010** | ND | ND | ND | ND | **0.013** |
| | SB-6-15-SV | 15 | | ND | ND | ND | ND | ND | ND | ND | ND | ND | **0.029** | **0.064** | ND | ND | ND | ND | **0.077** | ND | ND | **0.024** | ND | ND | ND | ND | **0.021** | ND | **ND** |
| | SB-6-30-SV | 30 | | **0.021** | ND | **0.029** | **0.027** | ND | ND | ND | **0.037** | **0.022** | ND | ND | **0.010** | ND | ND | **0.010** | ND | **0.016** | ND | **0.096** | ND | **0.021** | **0.084** | **0.036** | **0.088** | **0.068** | **0.16** |
| SB-8 | SB-8-5-SV | 5 | 5/2/2016 | ND | ND | **0.24** | ND | ND | ND | ND | ND | ND | ND | ND | ND | **0.036** | ND | ND | **0.20** | ND | ND | ND | ND | ND | ND | ND | **0.022** | ND | **0.027** |
| | SB-8-15-SV | 15 | | ND | ND | **0.10** | ND | ND | ND | ND | ND | ND | ND | ND | ND | ND | ND | ND | ND | ND | ND | **0.17** | ND | ND | **0.17** | ND | **0.29** | **0.14** | **0.40** |
| | SB-8-30-SV | 30 | | ND | ND | ND | ND | **2.0** | ND | ND | ND | ND | ND | ND | ND | ND | ND | ND | ND | ND | ND | **1.4** | **7.1** | ND | ND | ND | ND | ND | **0.42** |
| SB-12 | SB-12-5-SV | 5 | 5/2/2016 | ND | ND | ND | ND | ND | ND | ND | ND | ND | ND | ND | ND | ND | ND | ND | ND | ND | ND | **0.61** | ND | ND | ND | ND | **0.021** | ND | **0.021** |
| | SB-12-15-SV | 15 | | ND | ND | ND | ND | **0.053** | ND | ND | ND | ND | ND | ND | ND | ND | ND | ND | ND | ND | ND | **1.2** | **0.32** | ND | ND | ND | ND | ND | ND |
| | SB-12-30-SV | 30 | | ND | ND | ND | ND | **2.4** | ND | ND | ND | ND | ND | ND | ND | ND | ND | ND | ND | ND | ND | **1.6** | **9.1** | ND | ND | ND | ND | ND | ND |
| SB-14 | SB-14-5-SV | 5 | 5/2/2016 | ND | ND | ND | ND | **0.25** | ND | ND | ND | ND | ND | ND | ND | ND | ND | ND | ND | ND | ND | **0.55** | **2.5** | ND | ND | ND | ND | ND | ND |
| | SB-14-15-SV | 15 | | ND | ND | ND | ND | **1.1** | ND | ND | ND | ND | ND | ND | ND | ND | ND | ND | ND | ND | ND | **1.0** | **7.2** | ND | ND | ND | ND | ND | ND |
| SB-15 | SB-15-5-SV | 5 | 5/2/2016 | ND | ND | ND | ND | **0.61** | ND | ND | ND | ND | ND | ND | ND | ND | ND | ND | ND | ND | ND | **0.55** | **4.5** | ND | ND | ND | ND | ND | ND |
| | SB-15-11-SV | 11 | | ND | ND | ND | ND | **1.1** | ND | ND | ND | ND | ND | ND | ND | ND | ND | ND | ND | ND | ND | **0.75** | **6.6** | ND | ND | ND | ND | ND | ND |
| SB-16 | SB-16-5-SV | 5 | 5/2/2016 | ND | ND | ND | ND | ND | ND | ND | ND | ND | ND | ND | ND | ND | **0.054** | ND | ND | ND | **0.031** | **0.93** | **0.25** | ND | ND | ND | ND | ND | ND |
| | SB-16-11-SV | 11 | | ND | **0.025** | **0.028** | ND | **0.043** | **0.036** | **0.028** | ND | ND | ND | ND | **0.023** | ND | **0.031** | ND | ND | ND | **0.083** | **1.1** | **0.87** | ND | ND | ND | ND | ND | ND |
| **SFRWQCB ESLs** | | | | **15,000** | **0.033** | **0.061** | **--** | **37** | **4.2** | **--** | **0.56** | **--** | **--** | **--** | **--** | **--** | **--** | **--** | **--** | **--** | **470** | **0.24** | **--** | **--** | **--** | **--** | **--** | **--** | **--** |

**Notes:**

µg/L = micrograms per Liter

ND = Constituents not detected at or above their respective laboratory method reporting limit as reported in Appendix D

-- = Not Established

ft bgs = feet below ground surface

SFRWQCB ESLs = San Francisco Regional Water Quality Control Board Environmental Screening Levels

= Exceeds ESL

PCE =Tetrchloroethylene

TCE =Trichloroethylene

THF =Tetrahydrofuran

1,2,4 TMB =1,2,4- Trimethylbenzene

1,3,5-TMB = 1,3,5-Trimethylbenzene

*IPA was used as leak check

**TABLE 6**
**HERO VAPOR INTRUSION MODEL CACULATIONS**
800 Air Way, Glendale, California

| Analyte | Boring Number | Concentration (µg/L) | | Cancer Risk | Non Cancer Hazard |
|---|---|---|---|---|---|
| Acetone (67-64-1) | SB-6-30-SV | 0.021 | HERO RD | NA | 1.4E-07 |
| | | | HERO COM | NA | 1.7E-08 |
| Carbon Tetrachloride (56-23-5) | SB-16-11-SV | 0.025 | HERO RD | 1.0E-07 | 1.6E-04 |
| | | | HERO COM | 1.2E-08 | 1.9E-05 |
| Chloroform (67-66-3) | SB-6-30-SV | 0.029 | HERO RD | 3.3E-08 | 3.9E-05 |
| | | | HERO COM | 3.7E-09 | 4.6E-06 |
| | SB-8-5-SV | 0.24 | HERO RD | 1.4E-06 | 1.6E-03 |
| | | | HERO COM | 1.5E-07 | 1.9E-04 |
| | SB-8-15-SV | 0.10 | HERO RD | 2.2E-07 | 2.6E-04 |
| | | | HERO COM | 2.5E-08 | 3.1E-05 |
| | SB-16-11-SV | 0.028 | HERO RD | 8.1E-08 | 9.6E-05 |
| | | | HERO COM | 9.2E-09 | 1.1E-05 |
| 2-Butanone (78-93-3) | SB-6-30-SV | 0.027 | HERO RD | NA | 8.5E-07 |
| | | | HERO COM | NA | 1.0E-07 |
| 1,1-DCE (75-35-4) | SB-8-30-SV | 2.0 | HERO RD | NA | 4.2E-03 |
| | | | HERO COM | NA | 5.0E-04 |
| | SB-12-15-SV | 0.053 | HERO RD | NA | 2.1E-04 |
| | | | HERO COM | NA | 2.5E-05 |
| | SB-12-30-SV | 2.4 | HERO RD | NA | 5.0E-03 |
| | | | HERO COM | NA | 6.0E-04 |
| | SB-14-5-SV | 0.25 | HERO RD | NA | 2.6E-03 |
| | | | HERO COM | NA | 3.0E-04 |
| | SB-14-15-SV | 1.1 | HERO RD | NA | 4.4E-03 |
| | | | HERO COM | NA | 5.3E-04 |
| | SB-15-5-SV | 0.61 | HERO RD | NA | 6.2E-03 |
| | | | HERO COM | NA | 7.4E-04 |
| | SB-15-11-SV | 1.1 | HERO RD | NA | 5.8E-03 |
| | | | HERO COM | NA | 6.9E-04 |
| | SB-16-11-SV | 0.043 | HERO RD | NA | 2.3E-04 |
| | | | HERO COM | NA | 2.7E-05 |
| cis-1,2-DCE (156-59-2) | SB-16-11-SV | 0.036 | HERO RD | NA | 1.9E-03 |
| | | | HERO COM | NA | 2.3E-04 |
| Ethylbenzene (100-41-4) | SB-6-30-SV | 0.037 | HERO RD | 4.1E-09 | 4.4E-06 |
| | | | HERO COM | 4.6E-10 | 5.2E-07 |
| n-Hexane (110-54-3) | SB-6-15-SV | 0.064 | HERO RD | NA | 2.2E-05 |
| | | | HERO COM | NA | 2.6E-06 |
| R113 (76-13-1) | SB-6-30-SV | 0.010 | HERO RD | NA | 2.2E-08 |
| | | | HERO COM | NA | 2.6E-09 |
| | SB-16-11-SV | 0.023 | HERO RD | NA | 1.4E-07 |
| | | | HERO COM | NA | 1.6E-08 |
| MIBK (108-10-1) | SB-6-30-SV | 0.010 | HERO RD | NA | 4.0E-07 |
| | | | HERO COM | NA | 4.8E-08 |
| n-Propylbenzene (103-65-1) | SB-6-30-SV | 0.016 | HERO RD | NA | 1.7E-06 |
| | | | HERO COM | NA | 2.0E-07 |
| Styrene (100-42-5) | SB-16-5-SV | 0.031 | HERO RD | NA | 2.1E-05 |
| | | | HERO COM | NA | 2.9E-06 |
| | SB-16-11-SV | 0.083 | HERO RD | NA | 2.9E-05 |
| | | | HERO COM | NA | 3.5E-06 |

**TABLE 11**
**SOIL VAPOR RESULTS - HERO VAPOR INTRUSION MODEL**
800 Air Way, Glendale, California

| Analyte | Boring Number | Concentration (µg/L) | | Cancer Risk | Non Cancer Hazard |
|---|---|---|---|---|---|
| PCE (127-18-4) | SB-6-15-SV | 0.024 | HERO RD | 9.1E-09 | 1.2E-04 |
| | | | HERO COM | 1.0E-09 | 1.4E-05 |
| | SB-6-30-SV | 0.096 | HERO RD | 1.9E-08 | 2.4E-04 |
| | | | HERO COM | 2.1E-09 | 2.9E-05 |
| | SB-8-15-SV | 0.17 | HERO RD | 6.4E-08 | 8.4E-04 |
| | | | HERO COM | 7.4E-09 | 1.0E-04 |
| | SB-8-30-SV | 1.4 | HERO RD | 2.7E-07 | 3.5E-03 |
| | | | HERO COM | 3.1E-08 | 4.2E-04 |
| | SB-12-5-SV | 0.61 | HERO RD | 6.4E-07 | 8.4E-03 |
| | | | HERO COM | 7.3E-08 | 9.9E-04 |
| | SB-12-15-SV | 1.2 | HERO RD | 4.5E-07 | 5.9E-03 |
| | | | HERO COM | 5.2E-08 | 7.1E-04 |
| | SB-12-30-SV | 1.6 | HERO RD | 3.1E-07 | 4.0E-03 |
| | | | HERO COM | 3.5E-08 | 4.8E-04 |
| | SB-14-5-SV | 0.55 | HERO RD | 5.8E-07 | 7.5E-03 |
| | | | HERO COM | 6.6E-08 | 9.0E-04 |
| | SB-14-15-SV | 1.0 | HERO RD | 3.8E-07 | 4.9E-03 |
| | | | HERO COM | 4.3E-08 | 5.9E-04 |
| | SB-15-5-SV | 0.55 | HERO RD | 5.8E-07 | 7.5E-03 |
| | | | HERO COM | 6.6E-08 | 9.0E-04 |
| | SB-15-11-SV | 0.75 | HERO RD | 3.8E-07 | 5.0E-03 |
| | | | HERO COM | 4.4E-08 | 5.9E-04 |
| | SB-16-5-SV | 0.93 | HERO RD | 9.8E-07 | 1.3E-02 |
| | | | HERO COM | 1.1E-07 | 1.5E-03 |
| | SB-16-11-SV | 1.1 | HERO RD | 5.6E-07 | 7.3E-03 |
| | | | HERO COM | 6.4E-08 | 8.7E-04 |
| TCE (79-01-6) | SB-8-30-SV | 7.1 | HERO RD | 1.3E-06 | 4.2E-01 |
| | | | HERO COM | 1.5E-07 | 5.0E-02 |
| | SB-12-15-SV | 0.32 | HERO RD | 1.1E-07 | 3.7E-02 |
| | | | HERO COM | 1.3E-08 | 4.4E-03 |
| | SB-12-30-SV | 9.1 | HERO RD | 1.6E-06 | 5.4E-01 |
| | | | HERO COM | 1.9E-07 | 6.4E-02 |
| | SB-14-5-SV | 2.5 | HERO RD | 2.3E-06 | 7.6E-01 |
| | | | HERO COM | 2.6E-07 | 9.0E-02 |
| | SB-14-15-SV | 7.2 | HERO RD | 2.5E-06 | 8.2E-01 |
| | | | HERO COM | 2.9E-07 | 9.8E-02 |
| | SB-15-5-SV | 4.5 | HERO RD | 4.2E-06 | 1.4E+00 |
| | | | HERO COM | 4.8E-07 | 1.6E-01 |
| | SB-15-11-SV | 6.6 | HERO RD | 3.1E-06 | 1.0E+00 |
| | | | HERO COM | 3.5E-07 | 1.2E-01 |
| | SB-16-5-SV | 0.25 | HERO RD | 2.3E-07 | 7.6E-02 |
| | | | HERO COM | 2.6E-08 | 9.0E-03 |
| | SB-16-11-SV | 0.87 | HERO RD | 4.0E-07 | 1.3E-01 |
| | | | HERO COM | 4.6E-08 | 1.6E-02 |
| THF (109-99-9) | SB-6-5-SV | 0.010 | HERO RD | NA | 3.9E-06 |
| | | | HERO COM | NA | 4.6E-07 |
| | SB-6-30-SV | 0.021 | HERO RD | NA | 1.7E-06 |
| | | | HERO COM | NA | 2.0E-07 |
| 1,2,4-TMB (95-63-6) | SB-6-30-SV | 0.084 | HERO RD | NA | 1.3E-03 |
| | | | HERO COM | NA | 1.5E-04 |
| | SB-8-15-SV | 0.17 | HERO RD | NA | 5.0E-03 |
| | | | HERO COM | NA | 5.9E-04 |
| 1,3,5-TMB (108-67-8) | SB-6-30-SV | 0.036 | HERO RD | NA | 1.1E-04 |
| | | | HERO COM | NA | 1.3E-05 |

**TABLE 11**
**SOIL VAPOR RESULTS - HERO VAPOR INTRUSION MODEL**
800 Air Way, Glendale, California

| Analyte | Boring Number | Concentration (µg/L) | | Cancer Risk | Non Cancer Hazard |
|---|---|---|---|---|---|
| Toluene (108-88-3) | SB-6-15-SV | 0.021 | HERO RD | NA | 1.8E-05 |
| | | | HERO COM | NA | 2.1E-06 |
| | SB-6-30-SV | 0.088 | HERO RD | NA | 3.9E-05 |
| | | | HERO COM | NA | 4.7E-06 |
| | SB-8-5-SV | 0.022 | HERO RD | NA | 4.9E-05 |
| | | | HERO COM | NA | 5.8E-06 |
| | SB-8-15-SV | 0.29 | HERO RD | NA | 2.5E-04 |
| | | | HERO COM | NA | 2.9E-05 |
| | SB-12-5-SV | 0.021 | HERO RD | NA | 4.7E-05 |
| | | | HERO COM | NA | 5.5E-06 |
| o-Xylene (95-47-6) | SB-6-30-SV | 0.068 | HERO RD | NA | 8.1E-05 |
| | | | HERO COM | NA | 9.6E-06 |
| | SB-8-15-SV | 0.14 | HERO RD | NA | 3.2E-04 |
| | | | HERO COM | NA | 3.8E-05 |

# Appendix C PROCEDURE FOR SOIL SCREENING AND SOIL DISPOSAL DECISION DIAGRAM

**Procedures for Soil Screening, Stockpiling, and Sampling**

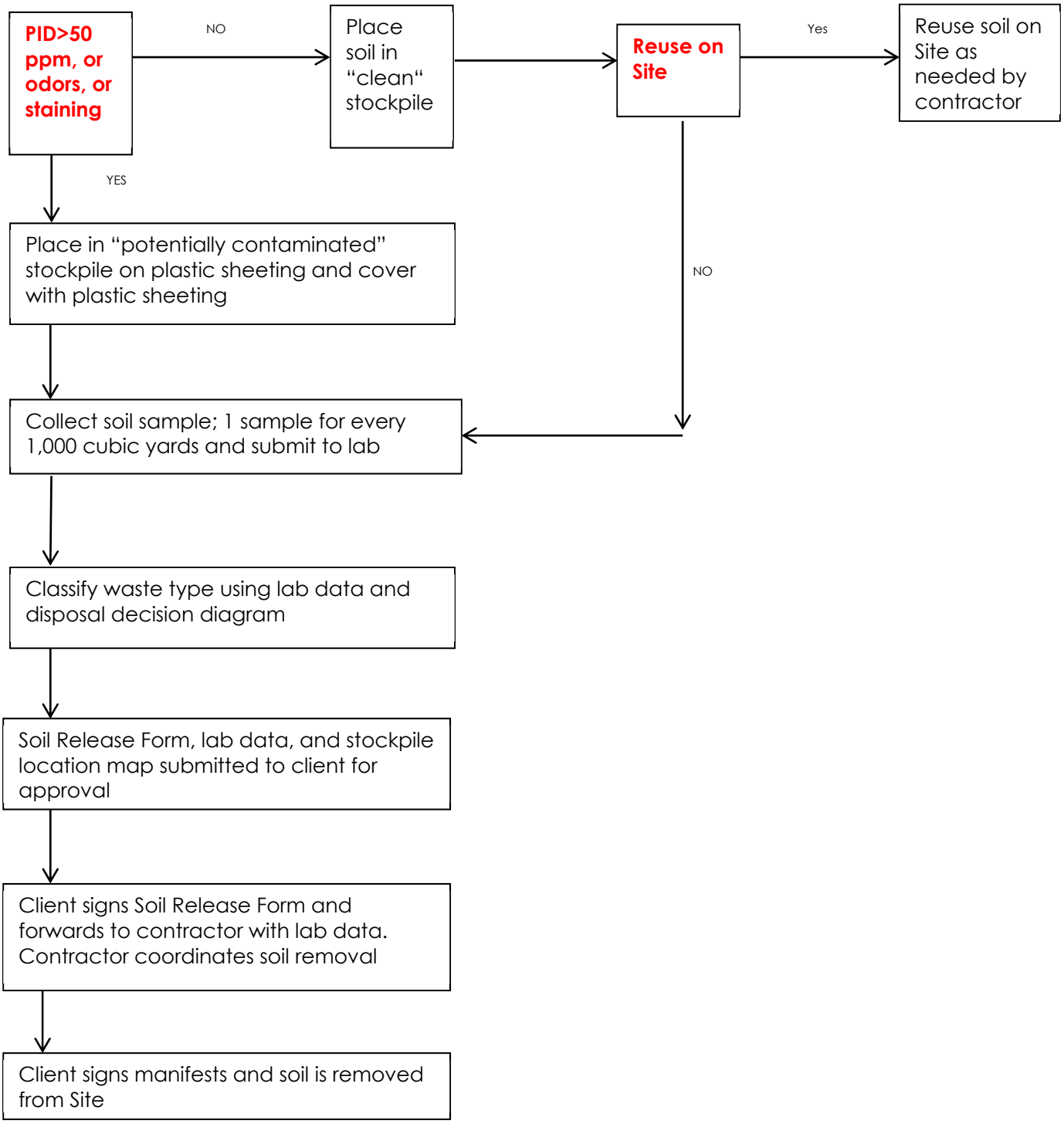

Stantec

**Soil Disposal Decision Diagram**

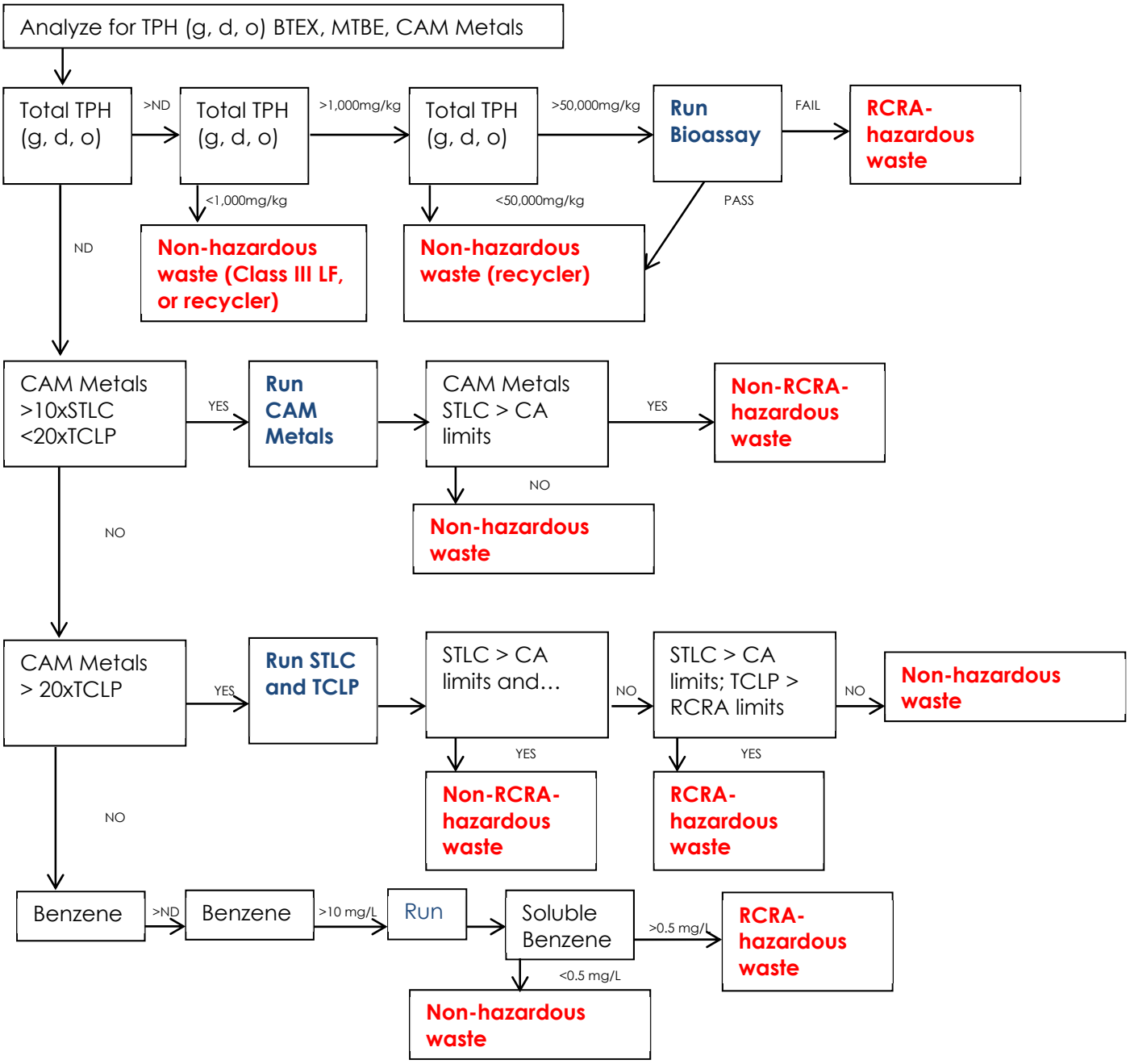


Design with community in mind

# Appendix D CASQA BEST MANAGEMENT PRACTICES (BMPS)

# Water Conservation Practices NS-1

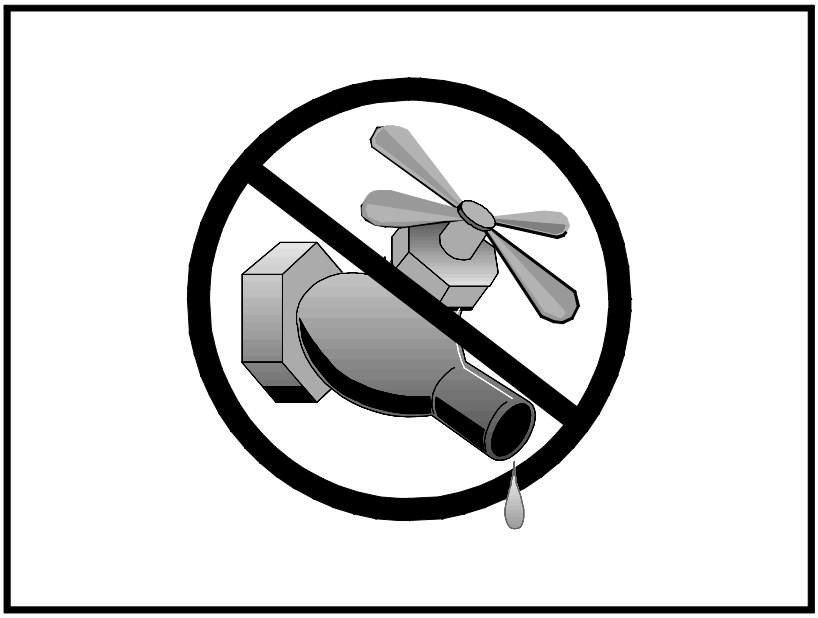

| Categories | | |
|---|---|---|
| EC | Erosion Control | ☒ |
| SE | Sediment Control | ☒ |
| TC | Tracking Control | |
| WE | Wind Erosion Control | |
| NS | Non-Stormwater Management Control | ☑ |
| WM | Waste Management and Materials Pollution Control | |

**Legend:**

☑ **Primary Objective**

☒ **Secondary Objective**

| Targeted Constituents | |
|---|---|
| Sediment | ☑ |
| Nutrients | |
| Trash | |
| Metals | |
| Bacteria | |
| Oil and Grease | |
| Organics | |

**Potential Alternatives**

None

If User/Subscriber modifies this fact sheet in any way, the CASQA name/logo and footer below must be removed from each page and not appear on the modified version.

## Description and Purpose

Water conservation practices are activities that use water during the construction of a project in a manner that avoids causing erosion and the transport of pollutants offsite. These practices can reduce or eliminate non-stormwater discharges.

## Suitable Applications

Water conservation practices are suitable for all construction sites where water is used, including piped water, metered water, trucked water, and water from a reservoir.

## Limitations

- None identified.

## Implementation

- Keep water equipment in good working condition.
- Stabilize water truck filling area.
- Repair water leaks promptly.
- Washing of vehicles and equipment on the construction site is discouraged.
- Avoid using water to clean construction areas. If water must be used for cleaning or surface preparation, surface should be swept and vacuumed first to remove dirt. This will minimize amount of water required.

- Direct construction water runoff to areas where it can soak into the ground or be collected and reused.
- Authorized non-stormwater discharges to the storm drain system, channels, or receiving waters are acceptable with the implementation of appropriate BMPs.
- Lock water tank valves to prevent unauthorized use.

## Costs

The cost is small to none compared to the benefits of conserving water.

## Inspection and Maintenance

- Inspect and verify that activity based BMPs are in place prior to the commencement of authorized non-stormwater discharges.
- Inspect BMPs in accordance with General Permit requirements for the associated project type and risk level. It is recommended that at a minimum, BMPs be inspected weekly, prior to forecasted rain events, daily during extended rain events, and after the conclusion of rain events.
- Inspect BMPs subject to non-stormwater discharges daily while non-stormwater discharges are occuring.
- Repair water equipment as needed to prevent unintended discharges.
  - Water trucks
  - Water reservoirs (water buffalos)
  - Irrigation systems
  - Hydrant connections

## References

Stormwater Quality Handbooks - Construction Site Best Management Practices (BMPs) Manual, State of California Department of Transportation (Caltrans), November 2000.

# Dewatering Operations NS-2

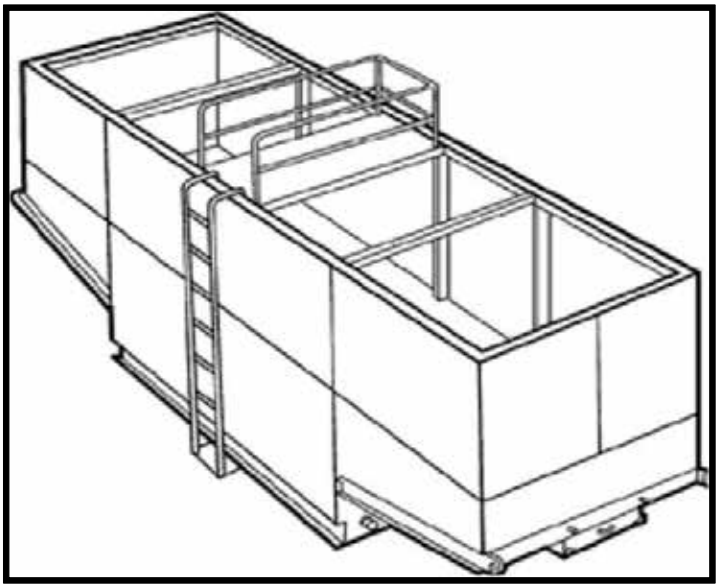

| Categories | | |
|---|---|---|
| EC | Erosion Control | |
| SE | Sediment Control | ☒ |
| TC | Tracking Control | |
| WE | Wind Erosion Control | |
| NS | Non-Stormwater Management Control | ☑ |
| WM | Waste Management and Materials Pollution Control | |

**Legend:**

☑ **Primary Category**

☒ **Secondary Category**

| Targeted Constituents | |
|---|---|
| Sediment | ☑ |
| Nutrients | |
| Trash | |
| Metals | |
| Bacteria | |
| Oil and Grease | ☑ |
| Organics | |

**Potential Alternatives**

SE-5: Fiber Roll

SE-6: Gravel Bag Berm

If User/Subscriber modifies this fact sheet in any way, the CASQA name/logo and footer below must be removed from each page and not appear on the modified version.

## Description and Purpose

Dewatering operations are practices that manage the discharge of pollutants when non-stormwater and accumulated precipitation (stormwater) must be removed from a work location to proceed with construction work or to provide vector control.

The General Permit incorporates Numeric Action Levels (NAL) for turbidity (see Section 2 of this handbook to determine your project's risk level and if you are subject to these requirements).

Discharges from dewatering operations can contain high levels of fine sediment that, if not properly treated, could lead to exceedances of the General Permit requirements or Basin Plan standards.

The dewatering operations described in this fact sheet are not Active Treatment Systems (ATS) and do not include the use of chemical coagulations, chemical flocculation or electrocoagulation.

## Suitable Applications

These practices are implemented for discharges of non-stormwater from construction sites. Non-stormwaters include, but are not limited to, groundwater, water from cofferdams, water diversions, and waters used during construction activities that must be removed from a work area to facilitate construction.

Practices identified in this section are also appropriate for implementation when managing the removal of accumulated

precipitation (stormwater) from depressed areas at a construction site.

Stormwater mixed with non-stormwater should be managed as non-stormwater.

### Limitations

- Dewatering operations will require, and should comply with applicable local and project-specific permits and regulations. In some areas, all dewatering activities, regardless of the discharge volume, require a dewatering permit.
- Site conditions will dictate design and use of dewatering operations.
- The controls discussed in this fact sheet primarily address sediment. Other secondary pollutant removal benefits are discussed where applicable.
- The controls detailed in this fact sheet only allow for minimal settling time for sediment particles. Use only when site conditions restrict the use of the other control methods.
- Avoid dewatering discharges where possible by using the water for dust control.

### Implementation

- A Construction Site Monitoring Plan (CSMP) should be included in the project Stormwater Pollution Prevention Plan (SWPPP).
- Regional Water Quality Control Board (RWQCB) Regions may require notification and approval prior to any discharge of water from construction sites.
- The destination of discharge from dewatering activities will typically determine the type of permit required for the discharge. For example, when discharging to a water of the U.S., a dewatering permit may be required through the site's governing RWQCB. When discharging to a sanitary sewer or Municipal Separate Storm Sewer System (MS4), a permit may need to be obtained from the owner of the sanitary sewer or MS4 in addition to obtaining an RWQCB dewatering permit. Additional permits or permissions from other agencies may be required for dewatering cofferdams or diversions.
- Dewatering discharges should not cause erosion at the discharge point. Appropriate BMPs should be implemented to maintain compliance with all applicable permits.
- Maintain dewatering records in accordance with all local and project-specific permits and regulations.

### Sediment Treatment

A variety of methods can be used to treat water during dewatering operations. Several devices are presented below and provide options to achieve sediment removal. The sediment particle size and permit or receiving water limitations on sediment or turbidity are key considerations for selecting sediment treatment option(s); in some cases, the use of multiple devices may be appropriate. Use of other enhanced treatment methods (i.e., introduction of chemicals or electric current to enhance flocculation and removal of sediment) must comply with: 1) for storm drain or surface water discharges, the requirements for Active Treatment Systems (see SE-11); or 2) for sanitary sewer discharges, the requirements of applicable sanitary sewer discharge permits.

***Sediment Basin (see also SE-2)***

*Description:*

- A sediment basin is a temporary basin with a controlled release structure that is formed by excavation or construction of an embankment to detain sediment-laden runoff and allow sediment to settle out before discharging. Sediment basins are generally larger than Sediment Traps (SE-3) and have a designed outlet structure.

*Appropriate Applications:*

- Effective for the removal of trash, gravel, sand, silt, some metals that settle out with the sediment.

*Implementation:*

- Excavation and construction of related facilities is required.
- Temporary sediment basins should be fenced if safety is a concern.
- Outlet protection is required to prevent erosion at the outfall location.

*Maintenance:*

- Maintenance is required for safety fencing, vegetation, embankment, inlet and outlet, as well as other features.
- Removal of sediment is required when the storage volume is reduced by one-third.

***Sediment Trap (See also SE-3)***

*Description:*

- A sediment trap is a temporary basin formed by excavation and/or construction of an earthen embankment across a waterway or low drainage area to detain sediment-laden runoff and allow sediment to settle out before discharging. Sediment traps are generally smaller than Sediment Basins (SE-2) and do not have a designed outlet (but do have a spillway or overflow).

*Appropriate Applications:*

Effective for the removal of large and medium sized particles (sand and gravel) and some metals that settle out with the sediment.

*Implementation:*

- Excavation and construction of related facilities is required.
- Trap inlets should be located to maximize the travel distance to the trap outlet.
- Use rock or vegetation to protect the trap outlets against erosion.

*Maintenance:*

- Maintenance is required for vegetation, embankment, inlet and outfall structures, as well as other features.
- Removal of sediment is required when the storage volume is reduced by one-third.

***Weir Tanks***

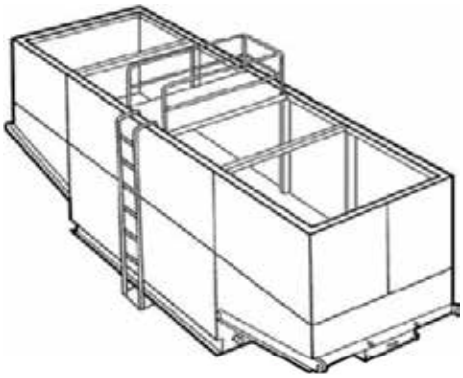

*Description:*

- A weir tank separates water and waste by using weirs. The configuration of the weirs (over and under weirs) maximizes the residence time in the tank and determines the waste to be removed from the water, such as oil, grease, and sediments.

*Appropriate Applications:*

- The tank removes trash, some settleable solids (gravel, sand, and silt), some visible oil and grease, and some metals (removed with sediment). To achieve high levels of flow, multiple tanks can be used in parallel. If additional treatment is desired, the tanks can be placed in series or as pre-treatment for other methods.

*Implementation:*

- Tanks are delivered to the site by the vendor, who can provide assistance with set-up and operation.
- Tank size will depend on flow volume, constituents of concern, and residency period required. Vendors should be consulted to appropriately size tank.
- Treatment capacity (i.e., volume and number of tanks) should provide at a minimum the required volume for discrete particle settling for treatment design flows.

*Maintenance:*

- Periodic cleaning is required based on visual inspection or reduced flow.
- Oil and grease disposal should be conducted by a licensed waste disposal company.

***Dewatering Tanks***

*Description:*

- A dewatering tank removes debris and sediment. Flow enters the tank through the top, passes through a fabric filter, and is discharged through the bottom of the tank. The filter separates the solids from the liquids.

*Appropriate Applications:*

- The tank removes trash, gravel, sand, and silt, some visible oil and grease, and some metals (removed with sediment). To achieve high levels of flow, multiple tanks can be used in parallel. If additional treatment is desired, the tanks can be placed in series or as pre-treatment for other methods.

*Implementation:*

- Tanks are delivered to the site by the vendor, who can provide assistance with set-up and operation.
- Tank size will depend on flow volume, constituents of concern, and residency period required. Vendors should be consulted to appropriately size tank.

*Maintenance:*

- Periodic cleaning is required based on visual inspection or reduced flow.
- Oil and grease disposal should be conducted by licensed waste disposal company.

### *Gravity Bag Filter*

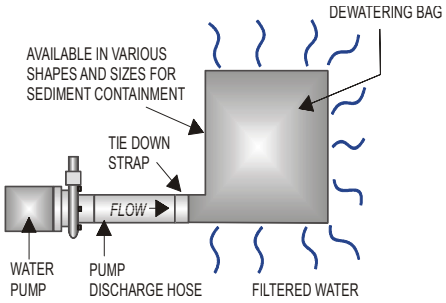


*Description:*

- A gravity bag filter, also referred to as a dewatering bag, is a square or rectangular bag made of non-woven geotextile fabric that collects gravel, sand, silt, and fines.

*Appropriate Applications:*

- Effective for the removal of sediments (gravel, sand, silt, and fines). Some metals are removed with the sediment.

*Implementation:*

- Water is pumped into one side of the bag and seeps through the top, bottom, and sides of the bag.
- Place filter bag on pavement or a gravel bed or paved surface. Avoid placing a dewatering bag on unprotected bare soil. If placing the bag on bare soil is unavoidable, a secondary barrier should be used, such as a rock filter bed placed beneath and beyond the edges of the bag to, prevent erosion and capture sediments that escape the bag.
- Perimeter control around the downstream end of the bag should be implemented. Secondary sediment controls are important especially in the initial stages of discharge, which tend to allow fines to pass through the bag.

*Maintenance:*

- Inspection of the flow conditions, bag condition, bag capacity, and the secondary barrier (as applicable) is required.
- Replace the bag when it no longer filters sediment or passes water at a reasonable rate.
- Caution should be taken when removing and disposing of the bag, to prevent the release of captured sediment
- Properly dispose of the bag offsite. If sediment is removed from the bag prior to disposal (bags can potentially be reused depending upon their condition), dispose of sediment in accordance with the general maintenance procedures described at the end of this BMP Fact Sheet.

***Sand Media Particulate Filter***

*Description:*

- Water is treated by passing it through canisters filled with sand media. Generally, sand filters provide a final level of treatment. They are often used as a secondary or higher level of treatment after a significant amount of sediment and other pollutants have been removed using other methods.

*Appropriate Applications:*

- Effective for the removal of trash, gravel, sand, and silt and some metals, as well as the reduction of biochemical oxygen demand (BOD) and turbidity.
- Sand filters can be used for stand-alone treatment or in conjunction with bag and cartridge filtration if further treatment is required.
- Sand filters can also be used to provide additional treatment to water treated via settling or basic filtration.

*Implementation:*

- The filters require delivery to the site and initial set up. The vendor can provide assistance with installation and operation.

*Maintenance:*

- The filters require regular service to monitor and maintain the level of the sand media. If subjected to high loading rates, filters can plug quickly.
- Venders generally provide data on maximum head loss through the filter. The filter should be monitored daily while in use, and cleaned when head loss reaches target levels.
- If cleaned by backwashing, the backwash water may need to be hauled away for disposal, or returned to the upper end of the treatment train for another pass through the series of dewatering BMPs.

***Pressurized Bag Filter***

*Description:*

- A pressurized bag filter is a unit composed of single filter bags made from polyester felt material. The water filters through the unit and is discharged through a header. Vendors provide bag filters in a variety of configurations. Some units include a combination of bag filters and cartridge filters for enhanced contaminant removal.

*Appropriate Applications:*

- Effective for the removal of sediment (sand and silt) and some metals, as well as the reduction of BOD, turbidity, and hydrocarbons. Oil absorbent bags are available for hydrocarbon removal.

- Filters can be used to provide secondary treatment to water treated via settling or basic filtration.

*Implementation:*

- The filters require delivery to the site and initial set up. The vendor can provide assistance with installation and operation.

*Maintenance:*

- The filter bags require replacement when the pressure differential equals or exceeds the manufacturer's recommendation.

***Cartridge Filter***

*Description:*

- Cartridge filters provide a high degree of pollutant removal by utilizing a number of individual cartridges as part of a larger filtering unit. They are often used as a secondary or higher (polishing) level of treatment after a significant amount of sediment and other pollutants are removed. Units come with various cartridge configurations (for use in series with bag filters) or with a larger single cartridge filtration unit (with multiple filters within).

*Appropriate Applications:*

- Effective for the removal of sediment (sand, silt, and some clays) and metals, as well as the reduction of BOD, turbidity, and hydrocarbons. Hydrocarbons can effectively be removed with special resin cartridges.

- Filters can be used to provide secondary treatment to water treated via settling or basic filtration.

*Implementation:*

- The filters require delivery to the site and initial set up. The vendor can provide assistance.

*Maintenance:*

- The cartridges require replacement when the pressure differential equals or exceeds the manufacturer's recommendation.

## Costs

- Sediment control costs vary considerably depending on the dewatering and sediment treatment system that is selected. Pressurized filters tend to be more expensive than gravity settling, but are often more effective. Simple tanks are generally rented on a long-term basis (one or more months) and can range from $360 per month for a 1,000 gallon tank to $2,660 per month for a 10,000 gallon tank. Mobilization and demobilization costs vary considerably.

## Inspection and Maintenance

- Inspect and verify that dewatering BMPs are in place and functioning prior to the commencement of activities requiring dewatering.

- Inspect dewatering BMPs daily while dewatering activities are being conducted.

- Inspect all equipment before use. Monitor dewatering operations to ensure they do not cause offsite discharge or erosion.
- Sample dewatering discharges as required by the General Permit.
- Unit-specific maintenance requirements are included with the description of each unit.
- Sediment removed during the maintenance of a dewatering device may be either spread onsite and stabilized, or disposed of at a disposal site as approved by the owner.
- Sediment that is commingled with other pollutants should be disposed of in accordance with all applicable laws and regulations and as approved by the owner.

### References

Blueprint for a Clean Bay: Best Management Practices to Prevent Stormwater Pollution from Construction Related Activities; Santa Clara Valley Nonpoint Source Pollution Control Program, 1995.

Stormwater Quality Handbooks - Construction Site Best Management Practices (BMPs) Manual, State of California Department of Transportation (Caltrans), March 2003; Updated March 2004.

Stormwater Management for Construction Activities, Developing Pollution Prevention Plans and Best Management Practices, EPA 832-R-92005; USEPA, April 1992.

Labor Surcharge & Equipment Rental Rates, April 1, 2002 through March 31, 2003, California Department of Transportation (Caltrans).

Erosion and Sediment Control Manual, Oregon Department of Environmental Quality, February 2005.

# Vehicle and Equipment Cleaning NS-8

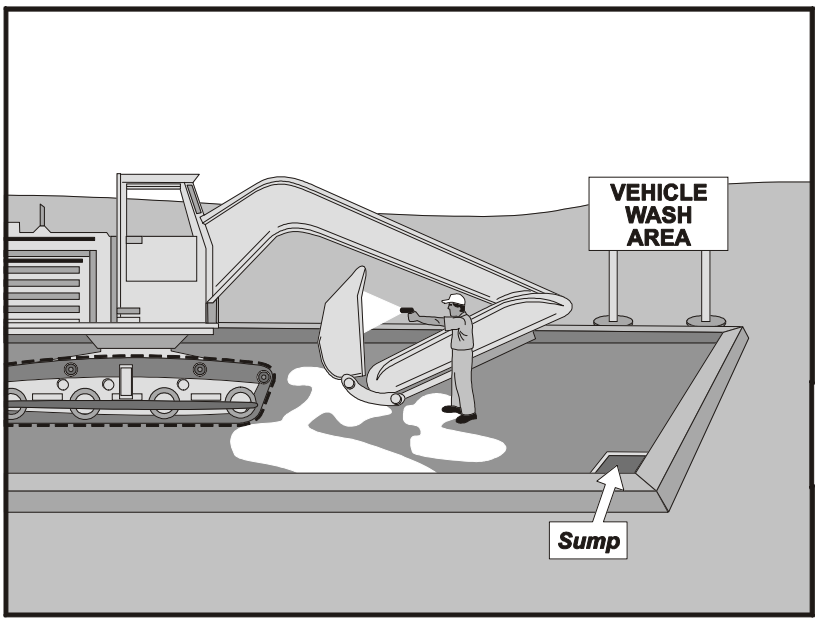


## Categories

| | | |
|---|---|---|
| EC | Erosion Control | |
| SE | Sediment Control | |
| TC | Tracking Control | |
| WE | Wind Erosion Control | |
| NS | Non-Stormwater Management Control | ☑ |
| WM | Waste Management and Materials Pollution Control | |

**Legend:**

☑ **Primary Objective**

☒ **Secondary Objective**

## Targeted Constituents

| | |
|---|---|
| Sediment | ☑ |
| Nutrients | ☑ |
| Trash | |
| Metals | |
| Bacteria | |
| Oil and Grease | ☑ |
| Organics | ☑ |

## Potential Alternatives

None

If User/Subscriber modifies this fact sheet in any way, the CASQA name/logo and footer below must be removed from each page and not appear on the modified version.

## Description and Purpose

Vehicle and equipment cleaning procedures and practices eliminate or reduce the discharge of pollutants to stormwater from vehicle and equipment cleaning operations. Procedures and practices include but are not limited to: using offsite facilities; washing in designated, contained areas only; eliminating discharges to the storm drain by infiltrating the wash water; and training employees and subcontractors in proper cleaning procedures.

## Suitable Applications

These procedures are suitable on all construction sites where vehicle and equipment cleaning is performed.

## Limitations

Even phosphate-free, biodegradable soaps have been shown to be toxic to fish before the soap degrades. Sending vehicles/equipment offsite should be done in conjunction with TC-1, Stabilized Construction Entrance/Exit.

## Implementation

Other options to washing equipment onsite include contracting with either an offsite or mobile commercial washing business. These businesses may be better equipped to handle and dispose of the wash waters properly. Performing this work offsite can also be economical by eliminating the need for a separate washing operation onsite.

If washing operations are to take place onsite, then:

- Use phosphate-free, biodegradable soaps.
- Educate employees and subcontractors on pollution prevention measures.
- Do not permit steam cleaning onsite. Steam cleaning can generate significant pollutant concentrates.
- Cleaning of vehicles and equipment with soap, solvents or steam should not occur on the project site unless resulting wastes are fully contained and disposed of. Resulting wastes should not be discharged or buried, and must be captured and recycled or disposed according to the requirements of WM-10, Liquid Waste Management or WM-6, Hazardous Waste Management, depending on the waste characteristics. Minimize use of solvents. Use of diesel for vehicle and equipment cleaning is prohibited.
- All vehicles and equipment that regularly enter and leave the construction site must be cleaned offsite.
- When vehicle and equipment washing and cleaning must occur onsite, and the operation cannot be located within a structure or building equipped with appropriate disposal facilities, the outside cleaning area should have the following characteristics:
  - Located away from storm drain inlets, drainage facilities, or watercourses
  - Paved with concrete or asphalt and bermed to contain wash waters and to prevent runon and runoff
  - Configured with a sump to allow collection and disposal of wash water
  - No discharge of wash waters to storm drains or watercourses
  - Used only when necessary
- When cleaning vehicles and equipment with water:
  - Use as little water as possible. High-pressure sprayers may use less water than a hose and should be considered
  - Use positive shutoff valve to minimize water usage
  - Facility wash racks should discharge to a sanitary sewer, recycle system or other approved discharge system and must not discharge to the storm drainage system, watercourses, or to groundwater

## Costs

Cleaning vehicles and equipment at an offsite facility may reduce overall costs for vehicle and equipment cleaning by eliminating the need to provide similar services onsite. When onsite cleaning is needed, the cost to establish appropriate facilities is relatively low on larger, long-duration projects, and moderate to high on small, short-duration projects.

## Inspection and Maintenance

- Inspect and verify that activity-based BMPs are in place prior to the commencement of associated activities. While activities associated with the BMP are under way, inspect BMPs in accordance with General Permit requirements for the associated project type and risk level. It is recommended that at a minimum, BMPs be inspected weekly, prior to forecasted rain events, daily during extended rain events, and after the conclusion of rain events.
- Inspect BMPs subject to non-stormwater discharges daily while non-stormwater discharges occur.
- Inspection and maintenance is minimal, although some berm repair may be necessary.
- Monitor employees and subcontractors throughout the duration of the construction project to ensure appropriate practices are being implemented.
- Inspect sump regularly and remove liquids and sediment as needed.
- Prohibit employees and subcontractors from washing personal vehicles and equipment on the construction site.

## References

Stormwater Quality Handbooks - Construction Site Best Management Practices (BMPs) Manual, State of California Department of Transportation (Caltrans), November 2000.

Swisher, R.D. Surfactant Biodegradation, Marcel Decker Corporation, 1987.

# Vehicle and Equipment Fueling NS-9

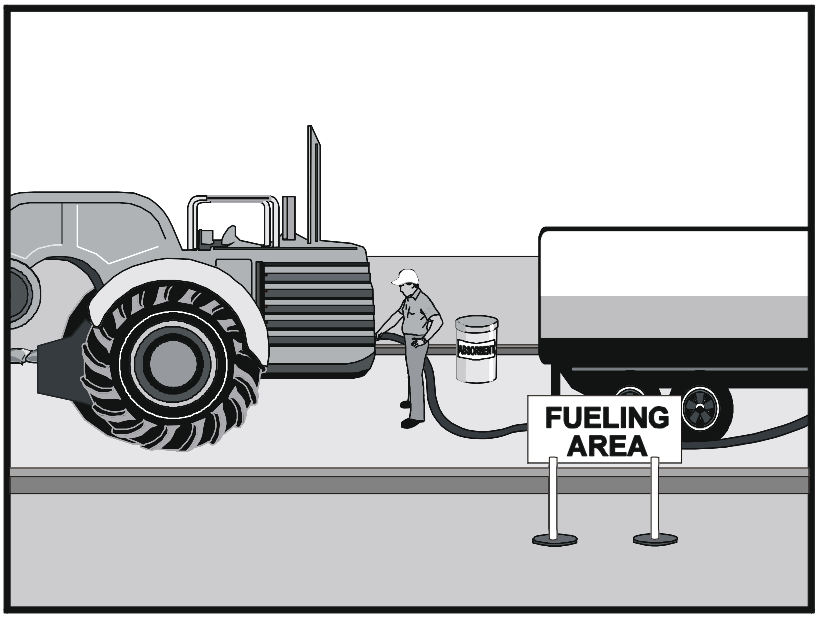


## Categories

| | | |
|---|---|---|
| EC | Erosion Control | |
| SE | Sediment Control | |
| TC | Tracking Control | |
| WE | Wind Erosion Control | |
| NS | Non-Stormwater Management Control | ☑ |
| WM | Waste Management and Materials Pollution Control | |

**Legend:**

☑ **Primary Objective**

☒ **Secondary Objective**

## Targeted Constituents

| | |
|---|---|
| Sediment | |
| Nutrients | |
| Trash | |
| Metals | |
| Bacteria | |
| Oil and Grease | ☑ |
| Organics | |

## Potential Alternatives

None

If User/Subscriber modifies this fact sheet in any way, the CASQA name/logo and footer below must be removed from each page and not appear on the modified version.

## Description and Purpose

Vehicle equipment fueling procedures and practices are designed to prevent fuel spills and leaks, and reduce or eliminate contamination of stormwater. This can be accomplished by using offsite facilities, fueling in designated areas only, enclosing or covering stored fuel, implementing spill controls, and training employees and subcontractors in proper fueling procedures.

## Suitable Applications

These procedures are suitable on all construction sites where vehicle and equipment fueling takes place.

## Limitations

Onsite vehicle and equipment fueling should only be used where it is impractical to send vehicles and equipment offsite for fueling. Sending vehicles and equipment offsite should be done in conjunction with TC-1, Stabilized Construction Entrance/ Exit.

## Implementation

- Use offsite fueling stations as much as possible. These businesses are better equipped to handle fuel and spills properly. Performing this work offsite can also be economical by eliminating the need for a separate fueling area at a site.
- Discourage “topping-off” of fuel tanks.

- Absorbent spill cleanup materials and spill kits should be available in fueling areas and on fueling trucks, and should be disposed of properly after use.
- Drip pans or absorbent pads should be used during vehicle and equipment fueling, unless the fueling is performed over an impermeable surface in a dedicated fueling area.
- Use absorbent materials on small spills. Do not hose down or bury the spill. Remove the adsorbent materials promptly and dispose of properly.
- Avoid mobile fueling of mobile construction equipment around the site; rather, transport the equipment to designated fueling areas. With the exception of tracked equipment such as bulldozers and large excavators, most vehicles should be able to travel to a designated area with little lost time.
- Train employees and subcontractors in proper fueling and cleanup procedures.
- When fueling must take place onsite, designate an area away from drainage courses to be used. Fueling areas should be identified in the SWPPP.
- Dedicated fueling areas should be protected from stormwater runon and runoff, and should be located at least 50 ft away from downstream drainage facilities and watercourses. Fueling must be performed on level-grade areas.
- Protect fueling areas with berms and dikes to prevent runon, runoff, and to contain spills.
- Nozzles used in vehicle and equipment fueling should be equipped with an automatic shutoff to control drips. Fueling operations should not be left unattended.
- Use vapor recovery nozzles to help control drips as well as air pollution where required by Air Quality Management Districts (AQMD).
- Federal, state, and local requirements should be observed for any stationary above ground storage tanks.

### Costs

- All of the above measures are low cost except for the capital costs of above ground tanks that meet all local environmental, zoning, and fire codes.

### Inspection and Maintenance

- Inspect BMPs in accordance with General Permit requirements for the associated project type and risk level. It is recommended that at a minimum, BMPs be inspected weekly, prior to forecasted rain events, daily during extended rain events, and after the conclusion of rain events.
- Vehicles and equipment should be inspected each day of use for leaks. Leaks should be repaired immediately or problem vehicles or equipment should be removed from the project site.
- Keep ample supplies of spill cleanup materials onsite.

- Immediately clean up spills and properly dispose of contaminated soil and cleanup materials.

## References

Blueprint for a Clean Bay: Best Management Practices to Prevent Stormwater Pollution from Construction Related Activities; Santa Clara Valley Nonpoint Source Pollution Control Program, 1995.

Coastal Nonpoint Pollution Control Program: Program Development and Approval Guidance, Working Group Working Paper; USEPA, April 1992.

Stormwater Quality Handbooks - Construction Site Best Management Practices (BMPs) Manual, State of California Department of Transportation (Caltrans), November 2000.

Stormwater Management for Construction Activities, Developing Pollution Prevention Plans and Best Management Practices, EPA 832-R-92005; USEPA, April 1992.

# Vehicle & Equipment Maintenance NS-10

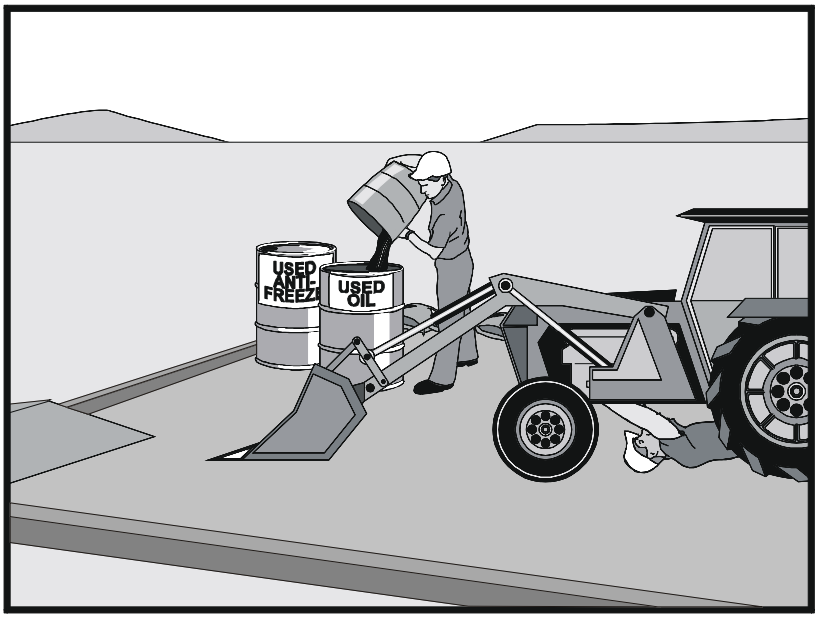


| Categories | | |
|---|---|---|
| EC | Erosion Control | |
| SE | Sediment Control | |
| TC | Tracking Control | |
| WE | Wind Erosion Control | |
| NS | Non-Stormwater Management Control | ☑ |
| WM | Waste Management and Materials Pollution Control | |

**Legend:**
☑ **Primary Objective**
☒ **Secondary Objective**

| Targeted Constituents | |
|---|---|
| Sediment | |
| Nutrients | ☑ |
| Trash | ☑ |
| Metals | |
| Bacteria | |
| Oil and Grease | ☑ |
| Organics | ☑ |

**Potential Alternatives**

None

If User/Subscriber modifies this fact sheet in any way, the CASQA name/logo and footer below must be removed from each page and not appear on the modified version.

## Description and Purpose

Prevent or reduce the contamination of stormwater resulting from vehicle and equipment maintenance by running a "dry and clean site". The best option would be to perform maintenance activities at an offsite facility. If this option is not available then work should be performed in designated areas only, while providing cover for materials stored outside, checking for leaks and spills, and containing and cleaning up spills immediately. Employees and subcontractors must be trained in proper procedures.

## Suitable Applications

These procedures are suitable on all construction projects where an onsite yard area is necessary for storage and maintenance of heavy equipment and vehicles.

## Limitations

Onsite vehicle and equipment maintenance should only be used where it is impractical to send vehicles and equipment offsite for maintenance and repair. Sending vehicles/equipment offsite should be done in conjunction with TC-1, Stabilized Construction Entrance/Exit.

Outdoor vehicle or equipment maintenance is a potentially significant source of stormwater pollution. Activities that can contaminate stormwater include engine repair and service, changing or replacement of fluids, and outdoor equipment storage and parking (engine fluid leaks). For further information on vehicle or equipment servicing, see NS-8,

Vehicle and Equipment Cleaning, and NS-9, Vehicle and Equipment Fueling.

### Implementation

- Use offsite repair shops as much as possible. These businesses are better equipped to handle vehicle fluids and spills properly. Performing this work offsite can also be economical by eliminating the need for a separate maintenance area.
- If maintenance must occur onsite, use designated areas, located away from drainage courses. Dedicated maintenance areas should be protected from stormwater runon and runoff, and should be located at least 50 ft from downstream drainage facilities and watercourses.
- Drip pans or absorbent pads should be used during vehicle and equipment maintenance work that involves fluids, unless the maintenance work is performed over an impermeable surface in a dedicated maintenance area.
- Place a stockpile of spill cleanup materials where it will be readily accessible.
- All fueling trucks and fueling areas are required to have spill kits and/or use other spill protection devices.
- Use adsorbent materials on small spills. Remove the absorbent materials promptly and dispose of properly.
- Inspect onsite vehicles and equipment daily at startup for leaks, and repair immediately.
- Keep vehicles and equipment clean; do not allow excessive build-up of oil and grease.
- Segregate and recycle wastes, such as greases, used oil or oil filters, antifreeze, cleaning solutions, automotive batteries, hydraulic and transmission fluids. Provide secondary containment and covers for these materials if stored onsite.
- Train employees and subcontractors in proper maintenance and spill cleanup procedures.
- Drip pans or plastic sheeting should be placed under all vehicles and equipment placed on docks, barges, or other structures over water bodies when the vehicle or equipment is planned to be idle for more than 1 hour.
- For long-term projects, consider using portable tents or covers over maintenance areas if maintenance cannot be performed offsite.
- Consider use of new, alternative greases and lubricants, such as adhesive greases, for chassis lubrication and fifth-wheel lubrication.
- Properly dispose of used oils, fluids, lubricants, and spill cleanup materials.
- Do not place used oil in a dumpster or pour into a storm drain or watercourse.
- Properly dispose of or recycle used batteries.
- Do not bury used tires.

- Repair leaks of fluids and oil immediately.

Listed below is further information if you must perform vehicle or equipment maintenance onsite.

***Safer Alternative Products***

- Consider products that are less toxic or hazardous than regular products. These products are often sold under an "environmentally friendly" label.
- Consider use of grease substitutes for lubrication of truck fifth-wheels. Follow manufacturers label for details on specific uses.
- Consider use of plastic friction plates on truck fifth-wheels in lieu of grease. Follow manufacturers label for details on specific uses.

***Waste Reduction***

Parts are often cleaned using solvents such as trichloroethylene, trichloroethane, or methylene chloride. Many of these cleaners are listed in California Toxic Rule as priority pollutants. These materials are harmful and must not contaminate stormwater. They must be disposed of as a hazardous waste. Reducing the number of solvents makes recycling easier and reduces hazardous waste management costs. Often, one solvent can perform a job as well as two different solvents. Also, if possible, eliminate or reduce the amount of hazardous materials and waste by substituting non-hazardous or less hazardous materials. For example, replace chlorinated organic solvents with non-chlorinated solvents. Non-chlorinated solvents like kerosene or mineral spirits are less toxic and less expensive to dispose of properly. Check the list of active ingredients to see whether it contains chlorinated solvents. The "chlor" term indicates that the solvent is chlorinated. Also, try substituting a wire brush for solvents to clean parts.

***Recycling and Disposal***

Separating wastes allows for easier recycling and may reduce disposal costs. Keep hazardous wastes separate, do not mix used oil solvents, and keep chlorinated solvents (like,-trichloroethane) separate from non-chlorinated solvents (like kerosene and mineral spirits). Promptly transfer used fluids to the proper waste or recycling drums. Don't leave full drip pans or other open containers lying around. Provide cover and secondary containment until these materials can be removed from the site.

Oil filters can be recycled. Ask your oil supplier or recycler about recycling oil filters.

Do not dispose of extra paints and coatings by dumping liquid onto the ground or throwing it into dumpsters. Allow coatings to dry or harden before disposal into covered dumpsters.

Store cracked batteries in a non-leaking secondary container. Do this with all cracked batteries, even if you think all the acid has drained out. If you drop a battery, treat it as if it is cracked. Put it into the containment area until you are sure it is not leaking.

## Costs

All of the above are low cost measures. Higher costs are incurred to setup and maintain onsite maintenance areas.

## Inspection and Maintenance

- Inspect and verify that activity-based BMPs are in place prior to the commencement of associated activities. While activities associated with the BMP are under way, inspect BMPs in accordance with General Permit requirements for the associated project type and risk level. It is recommended that at a minimum, BMPs be inspected weekly, prior to forecasted rain events, daily during extended rain events, and after the conclusion of rain events.
- Inspect BMPs subject to non-stormwater discharges daily while non-stormwater discharges occur.
- Keep ample supplies of spill cleanup materials onsite.
- Maintain waste fluid containers in leak proof condition.
- Vehicles and equipment should be inspected on each day of use. Leaks should be repaired immediately or the problem vehicle(s) or equipment should be removed from the project site.
- Inspect equipment for damaged hoses and leaky gaskets routinely. Repair or replace as needed.

## References

Blueprint for a Clean Bay: Best Management Practices to Prevent Stormwater Pollution from Construction Related Activities; Santa Clara Valley Nonpoint Source Pollution Control Program, 1995.

Coastal Nonpoint Pollution Control Program; Program Development and Approval Guidance, Working Group, Working Paper; USEPA, April 1992.

Stormwater Quality Handbooks - Construction Site Best Management Practices (BMPs) Manual, State of California Department of Transportation (Caltrans), November 2000.

# Material Delivery and Storage WM-1

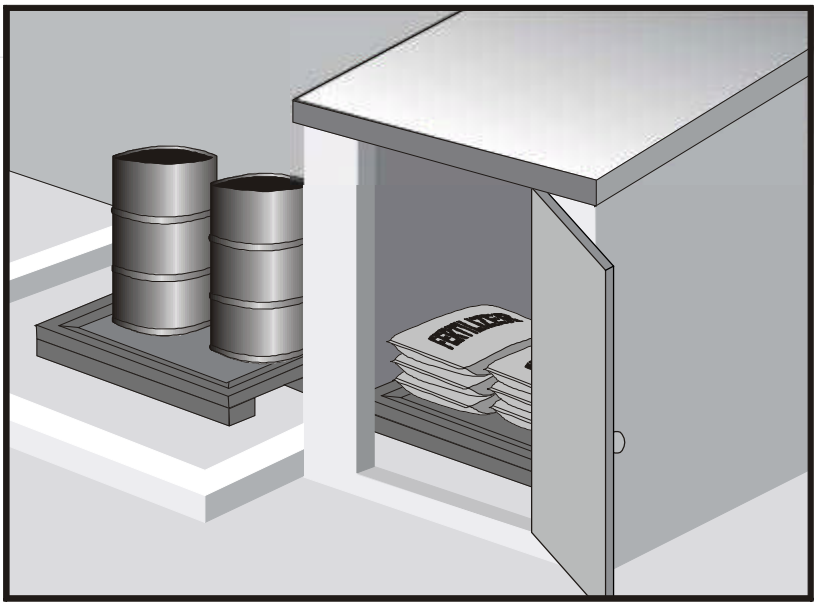

## Categories

| | | |
|---|---|---|
| EC | Erosion Control | |
| SE | Sediment Control | |
| TC | Tracking Control | |
| WE | Wind Erosion Control | |
| NS | Non-Stormwater Management Control | |
| WM | Waste Management and Materials Pollution Control | ☑ |

**Legend:**

☑ **Primary Category**

☒ **Secondary Category**

## Targeted Constituents

| | |
|---|---|
| Sediment | ☑ |
| Nutrients | ☑ |
| Trash | ☑ |
| Metals | ☑ |
| Bacteria | |
| Oil and Grease | ☑ |
| Organics | ☑ |

## Potential Alternatives

None

If User/Subscriber modifies this fact sheet in any way, the CASQA name/logo and footer below must be removed from each page and not appear on the modified version.

## Description and Purpose

Prevent, reduce, or eliminate the discharge of pollutants from material delivery and storage to the stormwater system or watercourses by minimizing the storage of hazardous materials onsite, storing materials in watertight containers and/or a completely enclosed designated area, installing secondary containment, conducting regular inspections, and training employees and subcontractors.

This best management practice covers only material delivery and storage. For other information on materials, see WM-2, Material Use, or WM-4, Spill Prevention and Control. For information on wastes, see the waste management BMPs in this section.

## Suitable Applications

These procedures are suitable for use at all construction sites with delivery and storage of the following materials:

- Soil stabilizers and binders
- Pesticides and herbicides
- Fertilizers
- Detergents
- Plaster
- Petroleum products such as fuel, oil, and grease

- Asphalt and concrete components
- Hazardous chemicals such as acids, lime, glues, adhesives, paints, solvents, and curing compounds
- Concrete compounds
- Other materials that may be detrimental if released to the environment

### Limitations

- Space limitation may preclude indoor storage.
- Storage sheds often must meet building and fire code requirements.

### Implementation

The following steps should be taken to minimize risk:

- Chemicals must be stored in water tight containers with appropriate secondary containment or in a storage shed.
- When a material storage area is located on bare soil, the area should be lined and bermed.
- Use containment pallets or other practical and available solutions, such as storing materials within newly constructed buildings or garages, to meet material storage requirements.
- Stack erodible landscape material on pallets and cover when not in use.
- Contain all fertilizers and other landscape materials when not in use.
- Temporary storage areas should be located away from vehicular traffic.
- Material Safety Data Sheets (MSDS) should be available on-site for all materials stored that have the potential to effect water quality.
- Construction site areas should be designated for material delivery and storage.
- Material delivery and storage areas should be located away from waterways, if possible.
    - Avoid transport near drainage paths or waterways.
    - Surround with earth berms or other appropriate containment BMP. See EC-9, Earth Dikes and Drainage Swales.
    - Place in an area that will be paved.
- Storage of reactive, ignitable, or flammable liquids must comply with the fire codes of your area. Contact the local Fire Marshal to review site materials, quantities, and proposed storage area to determine specific requirements. See the Flammable and Combustible Liquid Code, NFPA30.
- An up to date inventory of materials delivered and stored onsite should be kept.

- Hazardous materials storage onsite should be minimized.
- Hazardous materials should be handled as infrequently as possible.
- Keep ample spill cleanup supplies appropriate for the materials being stored. Ensure that cleanup supplies are in a conspicuous, labeled area.
- Employees and subcontractors should be trained on the proper material delivery and storage practices.
- Employees trained in emergency spill cleanup procedures must be present when dangerous materials or liquid chemicals are unloaded.
- If significant residual materials remain on the ground after construction is complete, properly remove and dispose of materials and any contaminated soil. See WM-7, Contaminated Soil Management. If the area is to be paved, pave as soon as materials are removed to stabilize the soil.

***Material Storage Areas and Practices***

- Liquids, petroleum products, and substances listed in 40 CFR Parts 110, 117, or 302 should be stored in approved containers and drums and should not be overfilled. Containers and drums should be placed in temporary containment facilities for storage.
- A temporary containment facility should provide for a spill containment volume able to contain precipitation from a 25 year storm event, plus the greater of 10% of the aggregate volume of all containers or 100% of the capacity of the largest container within its boundary, whichever is greater.
- A temporary containment facility should be impervious to the materials stored therein for a minimum contact time of 72 hours.
- A temporary containment facility should be maintained free of accumulated rainwater and spills. In the event of spills or leaks, accumulated rainwater and spills should be collected and placed into drums. These liquids should be handled as a hazardous waste unless testing determines them to be non-hazardous. All collected liquids or non-hazardous liquids should be sent to an approved disposal site.
- Sufficient separation should be provided between stored containers to allow for spill cleanup and emergency response access.
- Incompatible materials, such as chlorine and ammonia, should not be stored in the same temporary containment facility.
- Materials should be covered prior to, and during rain events.
- Materials should be stored in their original containers and the original product labels should be maintained in place in a legible condition. Damaged or otherwise illegible labels should be replaced immediately.

- Bagged and boxed materials should be stored on pallets and should not be allowed to accumulate on the ground. To provide protection from wind and rain throughout the rainy season, bagged and boxed materials should be covered during non-working days and prior to and during rain events.
- Stockpiles should be protected in accordance with WM-3, Stockpile Management.
- Materials should be stored indoors within existing structures or completely enclosed storage sheds when available.
- Proper storage instructions should be posted at all times in an open and conspicuous location.
- An ample supply of appropriate spill clean up material should be kept near storage areas.
- Also see WM-6, Hazardous Waste Management, for storing of hazardous wastes.

***Material Delivery Practices***

- Keep an accurate, up-to-date inventory of material delivered and stored onsite.
- Arrange for employees trained in emergency spill cleanup procedures to be present when dangerous materials or liquid chemicals are unloaded.

***Spill Cleanup***

- Contain and clean up any spill immediately.
- Properly remove and dispose of any hazardous materials or contaminated soil if significant residual materials remain on the ground after construction is complete. See WM-7, Contaminated Soil Management.
- See WM-4, Spill Prevention and Control, for spills of chemicals and/or hazardous materials.
- If spills or leaks of materials occur that are not contained and could discharge to surface waters, non-visible sampling of site discharge may be required. Refer to the General Permit or to your project specific Construction Site Monitoring Plan to determine if and where sampling is required.

## Cost

- The largest cost of implementation may be in the construction of a materials storage area that is covered and provides secondary containment.

## Inspection and Maintenance

- BMPs must be inspected in accordance with General Permit requirements for the associated project type and risk level. It is recommended that at a minimum, BMPs be inspected weekly, prior to forecasted rain events, daily during extended rain events, and after the conclusion of rain events.
- Keep storage areas clean and well organized, including a current list of all materials onsite.
- Inspect labels on containers for legibility and accuracy.

- Repair or replace perimeter controls, containment structures, covers, and liners as needed to maintain proper function.

### References

Blueprint for a Clean Bay: Best Management Practices to Prevent Stormwater Pollution from Construction Related Activities; Santa Clara Valley Nonpoint Source Pollution Control Program, 1995.

Coastal Nonpoint Pollution Control Program: Program Development and Approval Guidance, Working Group Working Paper; USEPA, April 1992.

Stormwater Quality Handbooks - Construction Site Best Management Practices (BMPs) Manual, State of California Department of Transportation (Caltrans), March 2003.

Stormwater Management for Construction Activities; Developing Pollution Prevention Plans and Best Management Practice, EPA 832-R-92005; USEPA, April 1992.

# Material Use WM-2

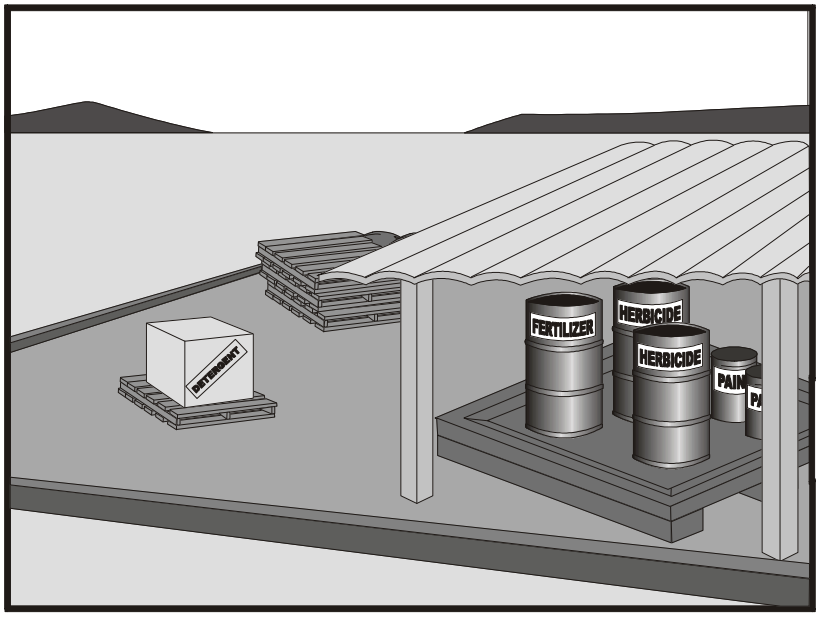


## Categories

| | | |
|---|---|---|
| EC | Erosion Control | |
| SE | Sediment Control | |
| TC | Tracking Control | |
| WE | Wind Erosion Control | |
| NS | Non-Stormwater Management Control | |
| WM | Waste Management and Materials Pollution Control | ☑ |

**Legend:**

☑ **Primary Category**

☒ **Secondary Category**

## Targeted Constituents

| | |
|---|---|
| Sediment | ☑ |
| Nutrients | ☑ |
| Trash | ☑ |
| Metals | ☑ |
| Bacteria | |
| Oil and Grease | ☑ |
| Organics | ☑ |

## Potential Alternatives

None

If User/Subscriber modifies this fact sheet in any way, the CASQA name/logo and footer below must be removed from each page and not appear on the modified version.

## Description and Purpose

Prevent or reduce the discharge of pollutants to the storm drain system or watercourses from material use by using alternative products, minimizing hazardous material use onsite, and training employees and subcontractors.

## Suitable Applications

This BMP is suitable for use at all construction projects. These procedures apply when the following materials are used or prepared onsite:

- Pesticides and herbicides
- Fertilizers
- Detergents
- Petroleum products such as fuel, oil, and grease
- Asphalt and other concrete components
- Other hazardous chemicals such as acids, lime, glues, adhesives, paints, solvents, and curing compounds
- Other materials that may be detrimental if released to the environment

### Limitations

Safer alternative building and construction products may not be available or suitable in every instance.

### Implementation

The following steps should be taken to minimize risk:

- Minimize use of hazardous materials onsite.
- Follow manufacturer instructions regarding uses, protective equipment, ventilation, flammability, and mixing of chemicals.
- Train personnel who use pesticides. The California Department of Pesticide Regulation and county agricultural commissioners license pesticide dealers, certify pesticide applicators, and conduct onsite inspections.
- The preferred method of termiticide application is soil injection near the existing or proposed structure foundation/slab; however, if not feasible, soil drench application of termiticides should follow EPA label guidelines and the following recommendations (most of which are applicable to most pesticide applications):
    - Do not treat soil that is water-saturated or frozen.
    - Application shall not commence within 24-hours of a predicted precipitation event with a 40% or greater probability. Weather tracking must be performed on a daily basis prior to termiticide application and during the period of termiticide application.
    - Do not allow treatment chemicals to runoff from the target area. Apply proper quantity to prevent excess runoff. Provide containment for and divert stormwater from application areas using berms or diversion ditches during application.
    - Dry season: Do not apply within 10 feet of storm drains. Do not apply within 25 feet of aquatic habitats (such as, but not limited to, lakes; reservoirs; rivers; permanent streams; marshes or ponds; estuaries; and commercial fish farm ponds).
    - Wet season: Do not apply within 50 feet of storm drains or aquatic habitats (such as, but not limited to, lakes; reservoirs; rivers; permanent streams; marshes or ponds; estuaries; and commercial fish farm ponds) unless a vegetative buffer is present (if so, refer to dry season requirements).
    - Do not make on-grade applications when sustained wind speeds are above 10 mph (at application site) at nozzle end height.
    - Cover treatment site prior to a rain event in order to prevent run-off of the pesticide into non-target areas. The treated area should be limited to a size that can be backfilled and/or covered by the end of the work shift. Backfilling or covering of the treated area shall be done by the end of the same work shift in which the application is made.
    - The applicator must either cover the soil him/herself or provide written notification of the above requirement to the contractor on site and to the person commissioning the

application (if different than the contractor). If notice is provided to the contractor or the person commissioning the application, then they are responsible under the Federal Insecticide Fungicide, and Rodenticide Act (FIFRA) to ensure that: 1) if the concrete slab cannot be poured over the treated soil within 24 hours of application, the treated soil is covered with a waterproof covering (such as polyethylene sheeting), and 2) the treated soil is covered if precipitation is predicted to occur before the concrete slab is scheduled to be poured.

- Do not over-apply fertilizers, herbicides, and pesticides. Prepare only the amount needed. Follow the recommended usage instructions. Over-application is expensive and environmentally harmful. Unless on steep slopes, till fertilizers into the soil rather than hydraulic application. Apply surface dressings in several smaller applications, as opposed to one large application, to allow time for infiltration and to avoid excess material being carried offsite by runoff. Do not apply these chemicals before predicted rainfall.
- Train employees and subcontractors in proper material use.
- Supply Material Safety Data Sheets (MSDS) for all materials.
- Dispose of latex paint and paint cans, used brushes, rags, absorbent materials, and drop cloths, when thoroughly dry and are no longer hazardous, with other construction debris.
- Do not remove the original product label; it contains important safety and disposal information. Use the entire product before disposing of the container.
- Mix paint indoors or in a containment area. Never clean paintbrushes or rinse paint containers into a street, gutter, storm drain, or watercourse. Dispose of any paint thinners, residue, and sludge(s) that cannot be recycled, as hazardous waste.
- For water-based paint, clean brushes to the extent practicable, and rinse to a drain leading to a sanitary sewer where permitted, or contain for proper disposal off site. For oil-based paints, clean brushes to the extent practicable, and filter and reuse thinners and solvents.
- Use recycled and less hazardous products when practical. Recycle residual paints, solvents, non-treated lumber, and other materials.
- Use materials only where and when needed to complete the construction activity. Use safer alternative materials as much as possible. Reduce or eliminate use of hazardous materials onsite when practical.
- Document the location, time, chemicals applied, and applicator's name and qualifications.
- Keep an ample supply of spill clean up material near use areas. Train employees in spill clean up procedures.
- Avoid exposing applied materials to rainfall and runoff unless sufficient time has been allowed for them to dry.
- Discontinue use of erodible landscape material within 2 days prior to a forecasted rain event and materials should be covered and/or bermed.

- Provide containment for material use areas such as masons' areas or paint mixing/preparation areas to prevent materials/pollutants from entering stormwater.

### Costs

All of the above are low cost measures.

### Inspection and Maintenance

- Inspect and verify that activity-based BMPs are in place prior to the commencement of associated activities.
- BMPs must be inspected in accordance with General Permit requirements for the associated project type and risk level. It is recommended that at a minimum, BMPs be inspected weekly, prior to forecasted rain events, daily during extended rain events, and after the conclusion of rain events.
- Ensure employees and subcontractors throughout the job are using appropriate practices.

### References

Blueprint for a Clean Bay: Best Management Practices to Prevent Stormwater Pollution from Construction Related Activities; Santa Clara Valley Nonpoint Source Pollution Control Program, 1995.

Coastal Nonpoint Pollution Control Program: Program Development and Approval Guidance, Working Group Working Paper; USEPA, April 1992.

Comments on Risk Assessments Risk Reduction Options for Cypermethrin: Docket No. OPP–2005–0293; California Stormwater Quality Association (CASQA) letter to USEPA, 2006.Environmental Hazard and General Labeling for Pyrethroid Non-Agricultural Outdoor Products, EPA-HQ-OPP-2008-0331-0021; USEPA, 2008.

Stormwater Quality Handbooks - Construction Site Best Management Practices (BMPs) Manual, State of California Department of Transportation (Caltrans), March 2003.

Stormwater Management for Construction Activities; Developing Pollution Prevention Plans and Best Management Practice, EPA 832-R-92005; USEPA, April 1992.

# Stockpile Management WM-3

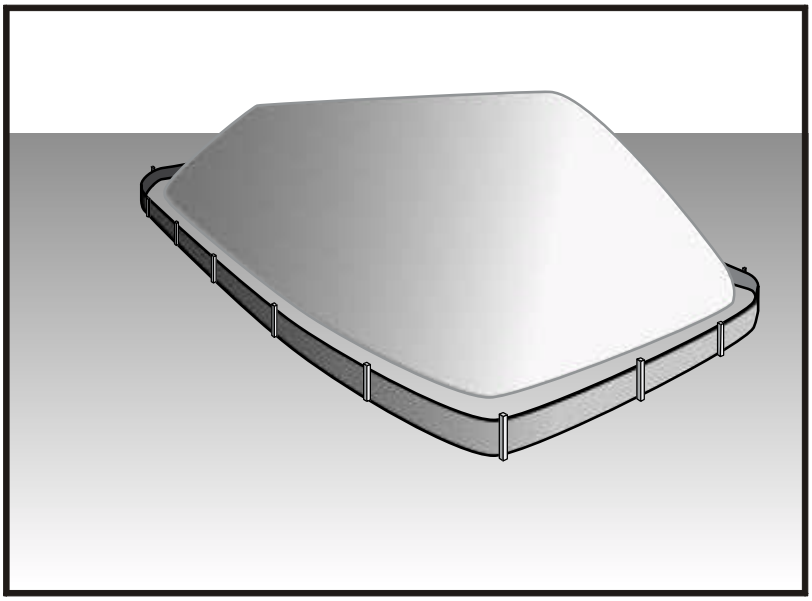

| Categories | | |
|---|---|---|
| EC | Erosion Control | |
| SE | Sediment Control | ☒ |
| TC | Tracking Control | |
| WE | Wind Erosion Control | |
| NS | Non-Stormwater Management Control | ☒ |
| WM | Waste Management and Materials Pollution Control | ☑ |

**Legend:**

☑ **Primary Category**

☒ **Secondary Category**

| Targeted Constituents | |
|---|---|
| Sediment | ☑ |
| Nutrients | ☑ |
| Trash | ☑ |
| Metals | ☑ |
| Bacteria | |
| Oil and Grease | ☑ |
| Organics | ☑ |

**Potential Alternatives**

None

## Description and Purpose

Stockpile management procedures and practices are designed to reduce or eliminate air and stormwater pollution from stockpiles of soil, soil amendments, sand, paving materials such as portland cement concrete (PCC) rubble, asphalt concrete (AC), asphalt concrete rubble, aggregate base, aggregate sub base or pre-mixed aggregate, asphalt minder (so called "cold mix" asphalt), and pressure treated wood.

## Suitable Applications

Implement in all projects that stockpile soil and other loose materials.

## Limitations

- Plastic sheeting as a stockpile protection is temporary and hard to manage in windy conditions. Where plastic is used, consider use of plastic tarps with nylon reinforcement which may be more durable than standard sheeting.
- Plastic sheeting can increase runoff volume due to lack of infiltration and potentially cause perimeter control failure.
- Plastic sheeting breaks down faster in sunlight.
- The use of Plastic materials and photodegradable plastics should be avoided.

## Implementation

Protection of stockpiles is a year-round requirement. To properly manage stockpiles:

If User/Subscriber modifies this fact sheet in any way, the CASQA name/logo and footer below must be removed from each page and not appear on the modified version.

- On larger sites, a minimum of 50 ft separation from concentrated flows of stormwater, drainage courses, and inlets is recommended.
- After 14 days of inactivity, a stockpile is non-active and requires further protection described below. All stockpiles are required to be protected as non-active stockpiles immediately if they are not scheduled to be used within 14 days.
- Protect all stockpiles from stormwater runon using temporary perimeter sediment barriers such as compost berms (SE-13), temporary silt dikes (SE-12), fiber rolls (SE-5), silt fences (SE-1), sandbags (SE-8), gravel bags (SE-6), or biofilter bags (SE-14). Refer to the individual fact sheet for each of these controls for installation information.
- Implement wind erosion control practices as appropriate on all stockpiled material. For specific information, see WE-1, Wind Erosion Control.
- Manage stockpiles of contaminated soil in accordance with WM-7, Contaminated Soil Management.
- Place bagged materials on pallets and under cover.
- Ensure that stockpile coverings are installed securely to protect from wind and rain.
- Some plastic covers withstand weather and sunlight better than others. Select cover materials or methods based on anticipated duration of use.

***Protection of Non-Active Stockpiles***

A stockpile is considered non-active if it either is not used for 14 days or if it is scheduled not to be used for 14 days or more. Stockpiles need to be protected immediately if they are not scheduled to be used within 14 days. Non-active stockpiles of the identified materials should be protected as follows:

*Soil stockpiles*

- Soil stockpiles should be covered or protected with soil stabilization measures and a temporary perimeter sediment barrier at all times.
- Temporary vegetation should be considered for topsoil piles that will be stockpiled for extended periods.

*Stockpiles of Portland cement concrete rubble, asphalt concrete, asphalt concrete rubble, aggregate base, or aggregate sub base*

- Stockpiles should be covered and protected with a temporary perimeter sediment barrier at all times.

*Stockpiles of "cold mix"*

- Cold mix stockpiles should be placed on and covered with plastic sheeting or comparable material at all times and surrounded by a berm.

*Stockpiles of fly ash, stucco, hydrated lime*

- Stockpiles of materials that may raise the pH of runoff (i.e., basic materials) should be covered with plastic and surrounded by a berm.

*Stockpiles/Storage of wood (Pressure treated with chromated copper arsenate or ammoniacal copper zinc arsenate*

- Treated wood should be covered with plastic sheeting or comparable material at all times and surrounded by a berm.

***Protection of Active Stockpiles***

A stockpile is active when it is being used or is scheduled to be used within 14 days of the previous use. Active stockpiles of the identified materials should be protected as follows:

- All stockpiles should be covered and protected with a temporary linear sediment barrier prior to the onset of precipitation.
- Stockpiles of "cold mix" and treated wood, and basic materials should be placed on and covered with plastic sheeting or comparable material and surrounded by a berm prior to the onset of precipitation.
- The downstream perimeter of an active stockpile should be protected with a linear sediment barrier or berm and runoff should be diverted around or away from the stockpile on the upstream perimeter.

## Costs

For cost information associated with stockpile protection refer to the individual erosion or sediment control BMP fact sheet considered for implementation (For example, refer to SE-1 Silt Fence for installation of silt fence around the perimeter of a stockpile.)

## Inspection and Maintenance

- Stockpiles must be inspected in accordance with General Permit requirements for the associated project type and risk level. It is recommended that at a minimum, BMPs be inspected weekly, prior to forecasted rain events, daily during extended rain events, and after the conclusion of rain events.
- It may be necessary to inspect stockpiles covered with plastic sheeting more frequently during certain conditions (for example, high winds or extreme heat).
- Repair and/or replace perimeter controls and covers as needed to keep them functioning properly.
- Sediment shall be removed when it reaches one-third of the barrier height.

## References

Stormwater Quality Handbooks - Construction Site Best Management Practices (BMPs) Manual, State of California Department of Transportation (Caltrans), March 2003.

# Spill Prevention and Control WM-4

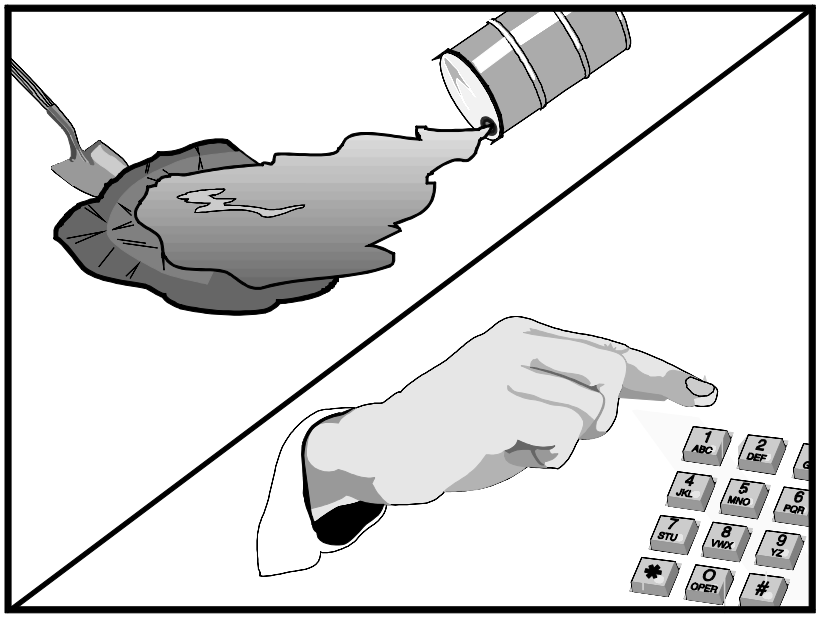

## Categories

| | | |
|---|---|---|
| EC | Erosion Control | |
| SE | Sediment Control | |
| TC | Tracking Control | |
| WE | Wind Erosion Control | |
| NS | Non-Stormwater Management Control | |
| WM | Waste Management and Materials Pollution Control | ☑ |

**Legend:**

☑ **Primary Objective**

☒ **Secondary Objective**

## Targeted Constituents

| | |
|---|---|
| Sediment | ☑ |
| Nutrients | ☑ |
| Trash | ☑ |
| Metals | ☑ |
| Bacteria | |
| Oil and Grease | ☑ |
| Organics | ☑ |

## Potential Alternatives

None

If User/Subscriber modifies this fact sheet in any way, the CASQA name/logo and footer below must be removed from each page and not appear on the modified version.

## Description and Purpose

Prevent or reduce the discharge of pollutants to drainage systems or watercourses from leaks and spills by reducing the chance for spills, stopping the source of spills, containing and cleaning up spills, properly disposing of spill materials, and training employees.

This best management practice covers only spill prevention and control. However, WM-1, Materials Delivery and Storage, and WM-2, Material Use, also contain useful information, particularly on spill prevention. For information on wastes, see the waste management BMPs in this section.

## Suitable Applications

This BMP is suitable for all construction projects. Spill control procedures are implemented anytime chemicals or hazardous substances are stored on the construction site, including the following materials:

- Soil stabilizers/binders
- Dust palliatives
- Herbicides
- Growth inhibitors
- Fertilizers
- Deicing/anti-icing chemicals

- Fuels
- Lubricants
- Other petroleum distillates

## Limitations

- In some cases it may be necessary to use a private spill cleanup company.
- This BMP applies to spills caused by the contractor and subcontractors.
- Procedures and practices presented in this BMP are general. Contractor should identify appropriate practices for the specific materials used or stored onsite

## Implementation

The following steps will help reduce the stormwater impacts of leaks and spills:

### *Education*

- Be aware that different materials pollute in different amounts. Make sure that each employee knows what a "significant spill" is for each material they use, and what is the appropriate response for "significant" and "insignificant" spills.
- Educate employees and subcontractors on potential dangers to humans and the environment from spills and leaks.
- Hold regular meetings to discuss and reinforce appropriate disposal procedures (incorporate into regular safety meetings).
- Establish a continuing education program to indoctrinate new employees.
- Have contractor's superintendent or representative oversee and enforce proper spill prevention and control measures.

### *General Measures*

- To the extent that the work can be accomplished safely, spills of oil, petroleum products, substances listed under 40 CFR parts 110,117, and 302, and sanitary and septic wastes should be contained and cleaned up immediately.
- Store hazardous materials and wastes in covered containers and protect from vandalism.
- Place a stockpile of spill cleanup materials where it will be readily accessible.
- Train employees in spill prevention and cleanup.
- Designate responsible individuals to oversee and enforce control measures.
- Spills should be covered and protected from stormwater runon during rainfall to the extent that it doesn't compromise clean up activities.
- Do not bury or wash spills with water.

- Store and dispose of used clean up materials, contaminated materials, and recovered spill material that is no longer suitable for the intended purpose in conformance with the provisions in applicable BMPs.
- Do not allow water used for cleaning and decontamination to enter storm drains or watercourses. Collect and dispose of contaminated water in accordance with WM-10, Liquid Waste Management.
- Contain water overflow or minor water spillage and do not allow it to discharge into drainage facilities or watercourses.
- Place proper storage, cleanup, and spill reporting instructions for hazardous materials stored or used on the project site in an open, conspicuous, and accessible location.
- Keep waste storage areas clean, well organized, and equipped with ample cleanup supplies as appropriate for the materials being stored. Perimeter controls, containment structures, covers, and liners should be repaired or replaced as needed to maintain proper function.

***Cleanup***

- Clean up leaks and spills immediately.
- Use a rag for small spills on paved surfaces, a damp mop for general cleanup, and absorbent material for larger spills. If the spilled material is hazardous, then the used cleanup materials are also hazardous and must be sent to either a certified laundry (rags) or disposed of as hazardous waste.
- Never hose down or bury dry material spills. Clean up as much of the material as possible and dispose of properly. See the waste management BMPs in this section for specific information.

***Minor Spills***

- Minor spills typically involve small quantities of oil, gasoline, paint, etc. which can be controlled by the first responder at the discovery of the spill.
- Use absorbent materials on small spills rather than hosing down or burying the spill.
- Absorbent materials should be promptly removed and disposed of properly.
- Follow the practice below for a minor spill:
  - Contain the spread of the spill.
  - Recover spilled materials.
  - Clean the contaminated area and properly dispose of contaminated materials.

***Semi-Significant Spills***

- Semi-significant spills still can be controlled by the first responder along with the aid of other personnel such as laborers and the foreman, etc. This response may require the cessation of all other activities.

- Spills should be cleaned up immediately:
  - Contain spread of the spill.
  - Notify the project foreman immediately.
  - If the spill occurs on paved or impermeable surfaces, clean up using "dry" methods (absorbent materials, cat litter and/or rags). Contain the spill by encircling with absorbent materials and do not let the spill spread widely.
  - If the spill occurs in dirt areas, immediately contain the spill by constructing an earthen dike. Dig up and properly dispose of contaminated soil.
  - If the spill occurs during rain, cover spill with tarps or other material to prevent contaminating runoff.

***Significant/Hazardous Spills***

- For significant or hazardous spills that cannot be controlled by personnel in the immediate vicinity, the following steps should be taken:
  - Notify the local emergency response by dialing 911. In addition to 911, the contractor will notify the proper county officials. It is the contractor's responsibility to have all emergency phone numbers at the construction site.
  - Notify the Governor's Office of Emergency Services Warning Center, (916) 845-8911.
  - For spills of federal reportable quantities, in conformance with the requirements in 40 CFR parts 110,119, and 302, the contractor should notify the National Response Center at (800) 424-8802.
  - Notification should first be made by telephone and followed up with a written report.
  - The services of a spills contractor or a Haz-Mat team should be obtained immediately. Construction personnel should not attempt to clean up until the appropriate and qualified staffs have arrived at the job site.
  - Other agencies which may need to be consulted include, but are not limited to, the Fire Department, the Public Works Department, the Coast Guard, the Highway Patrol, the City/County Police Department, Department of Toxic Substances, California Division of Oil and Gas, Cal/OSHA, etc.

***Reporting***

- Report significant spills to local agencies, such as the Fire Department; they can assist in cleanup.
- Federal regulations require that any significant oil spill into a water body or onto an adjoining shoreline be reported to the National Response Center (NRC) at 800-424-8802 (24 hours).

Use the following measures related to specific activities:

***Vehicle and Equipment Maintenance***

- If maintenance must occur onsite, use a designated area and a secondary containment, located away from drainage courses, to prevent the runon of stormwater and the runoff of spills.
- Regularly inspect onsite vehicles and equipment for leaks and repair immediately
- Check incoming vehicles and equipment (including delivery trucks, and employee and subcontractor vehicles) for leaking oil and fluids. Do not allow leaking vehicles or equipment onsite.
- Always use secondary containment, such as a drain pan or drop cloth, to catch spills or leaks when removing or changing fluids.
- Place drip pans or absorbent materials under paving equipment when not in use.
- Use absorbent materials on small spills rather than hosing down or burying the spill. Remove the absorbent materials promptly and dispose of properly.
- Promptly transfer used fluids to the proper waste or recycling drums. Don't leave full drip pans or other open containers lying around
- Oil filters disposed of in trashcans or dumpsters can leak oil and pollute stormwater. Place the oil filter in a funnel over a waste oil-recycling drum to drain excess oil before disposal. Oil filters can also be recycled. Ask the oil supplier or recycler about recycling oil filters.
- Store cracked batteries in a non-leaking secondary container. Do this with all cracked batteries even if you think all the acid has drained out. If you drop a battery, treat it as if it is cracked. Put it into the containment area until you are sure it is not leaking.

***Vehicle and Equipment Fueling***

- If fueling must occur onsite, use designate areas, located away from drainage courses, to prevent the runon of stormwater and the runoff of spills.
- Discourage "topping off" of fuel tanks.
- Always use secondary containment, such as a drain pan, when fueling to catch spills/ leaks.

## Costs

Prevention of leaks and spills is inexpensive. Treatment and/ or disposal of contaminated soil or water can be quite expensive.

## Inspection and Maintenance

- Inspect and verify that activity–based BMPs are in place prior to the commencement of associated activities. While activities associated with the BMP are under way, inspect BMPs in accordance with General Permit requirements for the associated project type and risk level. It is recommended that at a minimum, BMPs be inspected weekly, prior to forecasted rain events, daily during extended rain events, and after the conclusion of rain events.

- Inspect BMPs subject to non-stormwater discharge daily while non-stormwater discharges occur.
- Keep ample supplies of spill control and cleanup materials onsite, near storage, unloading, and maintenance areas.
- Update your spill prevention and control plan and stock cleanup materials as changes occur in the types of chemicals onsite.

### References

Blueprint for a Clean Bay: Best Management Practices to Prevent Stormwater Pollution from Construction Related Activities; Santa Clara Valley Nonpoint Source Pollution Control Program, 1995.

Stormwater Quality Handbooks - Construction Site Best Management Practices (BMPs) Manual, State of California Department of Transportation (Caltrans), November 2000.

Stormwater Management for Construction Activities; Developing Pollution Prevention Plans and Best Management Practice, EPA 832-R-92005; USEPA, April 1992.

# Solid Waste Management WM-5

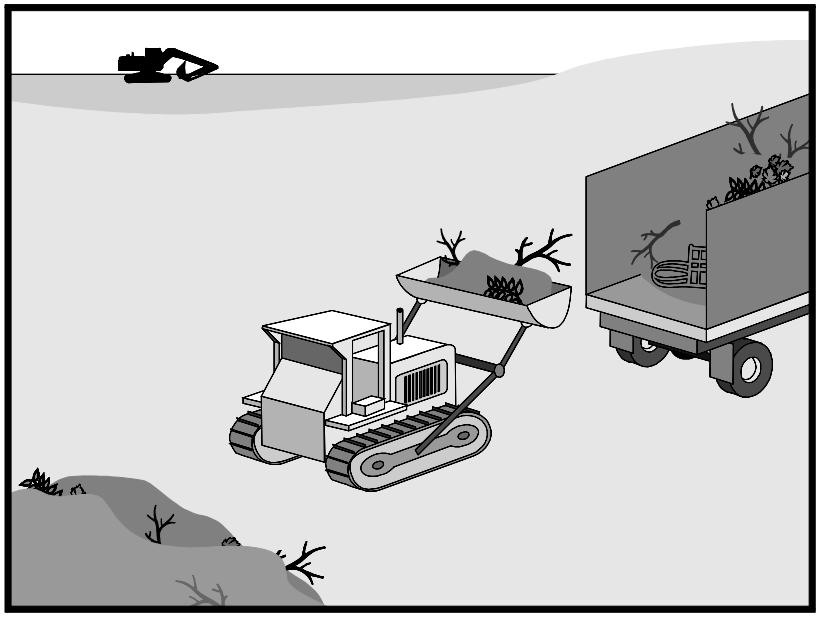

## Categories

| | | |
|---|---|---|
| EC | Erosion Control | |
| SE | Sediment Control | |
| TC | Tracking Control | |
| WE | Wind Erosion Control | |
| NS | Non-Stormwater Management Control | |
| WM | Waste Management and Materials Pollution Control | ☑ |

**Legend:**

☑ **Primary Objective**

☒ **Secondary Objective**

## Targeted Constituents

| | |
|---|---|
| Sediment | ☑ |
| Nutrients | ☑ |
| Trash | ☑ |
| Metals | ☑ |
| Bacteria | |
| Oil and Grease | ☑ |
| Organics | ☑ |

## Potential Alternatives

None

If User/Subscriber modifies this fact sheet in any way, the CASQA name/logo and footer below must be removed from each page and not appear on the modified version.

## Description and Purpose

Solid waste management procedures and practices are designed to prevent or reduce the discharge of pollutants to stormwater from solid or construction waste by providing designated waste collection areas and containers, arranging for regular disposal, and training employees and subcontractors.

## Suitable Applications

This BMP is suitable for construction sites where the following wastes are generated or stored:

- Solid waste generated from trees and shrubs removed during land clearing, demolition of existing structures (rubble), and building construction
- Packaging materials including wood, paper, and plastic
- Scrap or surplus building materials including scrap metals, rubber, plastic, glass pieces, and masonry products
- Domestic wastes including food containers such as beverage cans, coffee cups, paper bags, plastic wrappers, and cigarettes
- Construction wastes including brick, mortar, timber, steel and metal scraps, pipe and electrical cuttings, non-hazardous equipment parts, styrofoam and other materials used to transport and package construction materials

- Highway planting wastes, including vegetative material, plant containers, and packaging materials

### Limitations

Temporary stockpiling of certain construction wastes may not necessitate stringent drainage related controls during the non-rainy season or in desert areas with low rainfall.

### Implementation

The following steps will help keep a clean site and reduce stormwater pollution:

- Select designated waste collection areas onsite.
- Inform trash-hauling contractors that you will accept only watertight dumpsters for onsite use. Inspect dumpsters for leaks and repair any dumpster that is not watertight.
- Locate containers in a covered area or in a secondary containment.
- Provide an adequate number of containers with lids or covers that can be placed over the container to keep rain out or to prevent loss of wastes when it is windy.
- Cover waste containers at the end of each work day and when it is raining.
- Plan for additional containers and more frequent pickup during the demolition phase of construction.
- Collect site trash daily, especially during rainy and windy conditions.
- Remove this solid waste promptly since erosion and sediment control devices tend to collect litter.
- Make sure that toxic liquid wastes (used oils, solvents, and paints) and chemicals (acids, pesticides, additives, curing compounds) are not disposed of in dumpsters designated for construction debris.
- Do not hose out dumpsters on the construction site. Leave dumpster cleaning to the trash hauling contractor.
- Arrange for regular waste collection before containers overflow.
- Clean up immediately if a container does spill.
- Make sure that construction waste is collected, removed, and disposed of only at authorized disposal areas.

#### *Education*

- Have the contractor's superintendent or representative oversee and enforce proper solid waste management procedures and practices.
- Instruct employees and subcontractors on identification of solid waste and hazardous waste.
- Educate employees and subcontractors on solid waste storage and disposal procedures.

- Hold regular meetings to discuss and reinforce disposal procedures (incorporate into regular safety meetings).
- Require that employees and subcontractors follow solid waste handling and storage procedures.
- Prohibit littering by employees, subcontractors, and visitors.
- Minimize production of solid waste materials wherever possible.

***Collection, Storage, and Disposal***

- Littering on the project site should be prohibited.
- To prevent clogging of the storm drainage system, litter and debris removal from drainage grates, trash racks, and ditch lines should be a priority.
- Trash receptacles should be provided in the contractor's yard, field trailer areas, and at locations where workers congregate for lunch and break periods.
- Litter from work areas within the construction limits of the project site should be collected and placed in watertight dumpsters at least weekly, regardless of whether the litter was generated by the contractor, the public, or others. Collected litter and debris should not be placed in or next to drain inlets, stormwater drainage systems, or watercourses.
- Dumpsters of sufficient size and number should be provided to contain the solid waste generated by the project.
- Full dumpsters should be removed from the project site and the contents should be disposed of by the trash hauling contractor.
- Construction debris and waste should be removed from the site biweekly or more frequently as needed.
- Construction material visible to the public should be stored or stacked in an orderly manner.
- Stormwater runon should be prevented from contacting stored solid waste through the use of berms, dikes, or other temporary diversion structures or through the use of measures to elevate waste from site surfaces.
- Solid waste storage areas should be located at least 50 ft from drainage facilities and watercourses and should not be located in areas prone to flooding or ponding.
- Except during fair weather, construction and highway planting waste not stored in watertight dumpsters should be securely covered from wind and rain by covering the waste with tarps or plastic.
- Segregate potentially hazardous waste from non-hazardous construction site waste.
- Make sure that toxic liquid wastes (used oils, solvents, and paints) and chemicals (acids, pesticides, additives, curing compounds) are not disposed of in dumpsters designated for construction debris.

- For disposal of hazardous waste, see WM-6, Hazardous Waste Management. Have hazardous waste hauled to an appropriate disposal and/or recycling facility.
- Salvage or recycle useful vegetation debris, packaging and surplus building materials when practical. For example, trees and shrubs from land clearing can be used as a brush barrier, or converted into wood chips, then used as mulch on graded areas. Wood pallets, cardboard boxes, and construction scraps can also be recycled.

### Costs

All of the above are low cost measures.

### Inspection and Maintenance

- Inspect and verify that activity–based BMPs are in place prior to the commencement of associated activities. While activities associated with the BMP are under way, inspect BMPs in accordance with General Permit requirements for the associated project type and risk level. It is recommended that at a minimum, BMPs be inspected weekly, prior to forecasted rain events, daily during extended rain events, and after the conclusion of rain events.
- Inspect BMPs subject to non-stormwater discharge daily while non-stormwater discharges occur
- Inspect construction waste area regularly.
- Arrange for regular waste collection.

### References

Processes, Procedures and Methods to Control Pollution Resulting from All Construction Activity, 430/9-73-007, USEPA, 1973.

Stormwater Quality Handbooks - Construction Site Best Management Practices (BMPs) Manual, State of California Department of Transportation (Caltrans), November 2000.

Stormwater Management for Construction Activities; Developing Pollution Prevention Plans and Best Management Practice, EPA 832-R-92005; USEPA, April 1992.

# Hazardous Waste Management WM-6

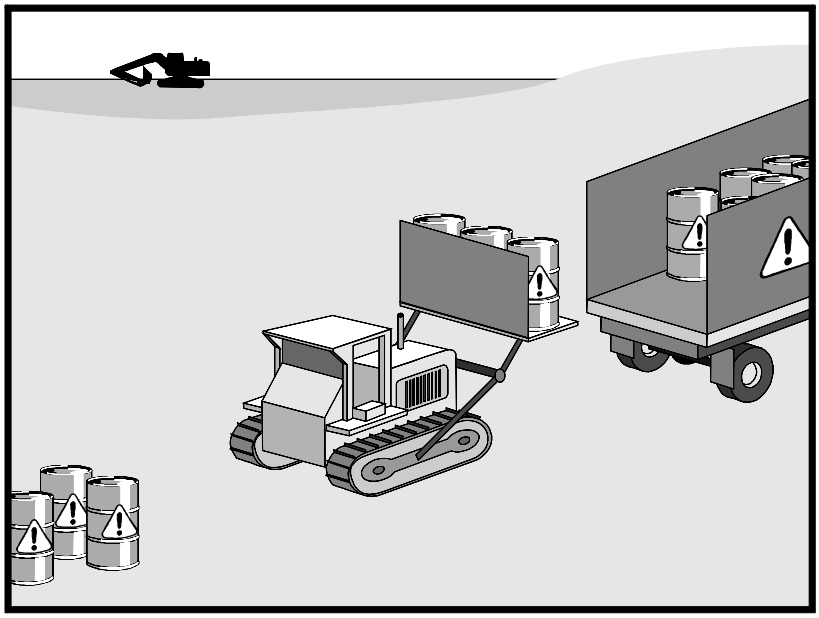

## Categories

| | | |
|---|---|---|
| EC | Erosion Control | |
| SE | Sediment Control | |
| TC | Tracking Control | |
| WE | Wind Erosion Control | |
| NS | Non-Stormwater Management Control | |
| WM | Waste Management and Materials Pollution Control | ☑ |

**Legend:**

☑ **Primary Objective**

☒ **Secondary Objective**

## Targeted Constituents

| | |
|---|---|
| Sediment | |
| Nutrients | ☑ |
| Trash | ☑ |
| Metals | ☑ |
| Bacteria | ☑ |
| Oil and Grease | ☑ |
| Organics | ☑ |

## Potential Alternatives

None

If User/Subscriber modifies this fact sheet in any way, the CASQA name/logo and footer below must be removed from each page and not appear on the modified version.

## Description and Purpose

Prevent or reduce the discharge of pollutants to stormwater from hazardous waste through proper material use, waste disposal, and training of employees and subcontractors.

## Suitable Applications

This best management practice (BMP) applies to all construction projects. Hazardous waste management practices are implemented on construction projects that generate waste from the use of:

- Petroleum Products
- Concrete Curing Compounds
- Palliatives
- Septic Wastes
- Stains
- Wood Preservatives
- Asphalt Products
- Pesticides
- Acids
- Paints
- Solvents
- Roofing Tar
- Any materials deemed a hazardous waste in California, Title 22 Division 4.5, or listed in 40 CFR Parts 110, 117, 261, or 302

In addition, sites with existing structures may contain wastes, which must be disposed of in accordance with federal, state, and local regulations. These wastes include:

- Sandblasting grit mixed with lead-, cadmium-, or chromium-based paints
- Asbestos
- PCBs (particularly in older transformers)

## Limitations

- Hazardous waste that cannot be reused or recycled must be disposed of by a licensed hazardous waste hauler.
- Nothing in this BMP relieves the contractor from responsibility for compliance with federal, state, and local laws regarding storage, handling, transportation, and disposal of hazardous wastes.
- This BMP does not cover aerially deposited lead (ADL) soils. For ADL soils refer to WM-7, Contaminated Soil Management.

## Implementation

The following steps will help reduce stormwater pollution from hazardous wastes:

### *Material Use*

- Wastes should be stored in sealed containers constructed of a suitable material and should be labeled as required by Title 22 CCR, Division 4.5 and 49 CFR Parts 172, 173, 178, and 179.
- All hazardous waste should be stored, transported, and disposed as required in Title 22 CCR, Division 4.5 and 49 CFR 261-263.
- Waste containers should be stored in temporary containment facilities that should comply with the following requirements:
  - Temporary containment facility should provide for a spill containment volume equal to 1.5 times the volume of all containers able to contain precipitation from a 25 year storm event, plus the greater of 10% of the aggregate volume of all containers or 100% of the capacity of the largest tank within its boundary, whichever is greater.
  - Temporary containment facility should be impervious to the materials stored there for a minimum contact time of 72 hours.
  - Temporary containment facilities should be maintained free of accumulated rainwater and spills. In the event of spills or leaks, accumulated rainwater and spills should be placed into drums after each rainfall. These liquids should be handled as a hazardous waste unless testing determines them to be non-hazardous. Non-hazardous liquids should be sent to an approved disposal site.
  - Sufficient separation should be provided between stored containers to allow for spill cleanup and emergency response access.

- Incompatible materials, such as chlorine and ammonia, should not be stored in the same temporary containment facility.
- Throughout the rainy season, temporary containment facilities should be covered during non-working days, and prior to rain events. Covered facilities may include use of plastic tarps for small facilities or constructed roofs with overhangs.

- Drums should not be overfilled and wastes should not be mixed.
- Unless watertight, containers of dry waste should be stored on pallets.
- Do not over-apply herbicides and pesticides. Prepare only the amount needed. Follow the recommended usage instructions. Over application is expensive and environmentally harmful. Apply surface dressings in several smaller applications, as opposed to one large application. Allow time for infiltration and avoid excess material being carried offsite by runoff. Do not apply these chemicals just before it rains. People applying pesticides must be certified in accordance with federal and state regulations.
- Paint brushes and equipment for water and oil based paints should be cleaned within a contained area and should not be allowed to contaminate site soils, watercourses, or drainage systems. Waste paints, thinners, solvents, residues, and sludges that cannot be recycled or reused should be disposed of as hazardous waste. When thoroughly dry, latex paint and paint cans, used brushes, rags, absorbent materials, and drop cloths should be disposed of as solid waste.
- Do not clean out brushes or rinse paint containers into the dirt, street, gutter, storm drain, or stream. "Paint out" brushes as much as possible. Rinse water-based paints to the sanitary sewer. Filter and reuse thinners and solvents. Dispose of excess oil-based paints and sludge as hazardous waste.
- The following actions should be taken with respect to temporary contaminant:
  - Ensure that adequate hazardous waste storage volume is available.
  - Ensure that hazardous waste collection containers are conveniently located.
  - Designate hazardous waste storage areas onsite away from storm drains or watercourses and away from moving vehicles and equipment to prevent accidental spills.
  - Minimize production or generation of hazardous materials and hazardous waste on the job site.
  - Use containment berms in fueling and maintenance areas and where the potential for spills is high.
  - Segregate potentially hazardous waste from non-hazardous construction site debris.
  - Keep liquid or semi-liquid hazardous waste in appropriate containers (closed drums or similar) and under cover.

- Clearly label all hazardous waste containers with the waste being stored and the date of accumulation.
- Place hazardous waste containers in secondary containment.
- Do not allow potentially hazardous waste materials to accumulate on the ground.
- Do not mix wastes.
- Use all of the product before disposing of the container.
- Do not remove the original product label; it contains important safety and disposal information.

***Waste Recycling Disposal***

- Select designated hazardous waste collection areas onsite.
- Hazardous materials and wastes should be stored in covered containers and protected from vandalism.
- Place hazardous waste containers in secondary containment.
- Do not mix wastes, this can cause chemical reactions, making recycling impossible and complicating disposal.
- Recycle any useful materials such as used oil or water-based paint.
- Make sure that toxic liquid wastes (used oils, solvents, and paints) and chemicals (acids, pesticides, additives, curing compounds) are not disposed of in dumpsters designated for construction debris.
- Arrange for regular waste collection before containers overflow.
- Make sure that hazardous waste (e.g., excess oil-based paint and sludge) is collected, removed, and disposed of only at authorized disposal areas.

***Disposal Procedures***

- Waste should be disposed of by a licensed hazardous waste transporter at an authorized and licensed disposal facility or recycling facility utilizing properly completed Uniform Hazardous Waste Manifest forms.
- A Department of Health Services certified laboratory should sample waste to determine the appropriate disposal facility.
- Properly dispose of rainwater in secondary containment that may have mixed with hazardous waste.
- Attention is directed to "Hazardous Material", "Contaminated Material", and "Aerially Deposited Lead" of the contract documents regarding the handling and disposal of hazardous materials.

### *Education*

- Educate employees and subcontractors on hazardous waste storage and disposal procedures.
- Educate employees and subcontractors on potential dangers to humans and the environment from hazardous wastes.
- Instruct employees and subcontractors on safety procedures for common construction site hazardous wastes.
- Instruct employees and subcontractors in identification of hazardous and solid waste.
- Hold regular meetings to discuss and reinforce hazardous waste management procedures (incorporate into regular safety meetings).
- The contractor's superintendent or representative should oversee and enforce proper hazardous waste management procedures and practices.
- Make sure that hazardous waste is collected, removed, and disposed of only at authorized disposal areas.
- Warning signs should be placed in areas recently treated with chemicals.
- Place a stockpile of spill cleanup materials where it will be readily accessible.
- If a container does spill, clean up immediately.

## Costs

All of the above are low cost measures.

### *Inspection and Maintenance*

- Inspect and verify that activity–based BMPs are in place prior to the commencement of associated activities. While activities associated with the BMP are under way, inspect BMPs in accordance with General Permit requirements for the associated project type and risk level. It is recommended that at a minimum, BMPs be inspected weekly, prior to forecasted rain events, daily during extended rain events, and after the conclusion of rain events..
- Inspect BMPs subject to non-stormwater discharge daily while non-stormwater discharges occur
- Hazardous waste should be regularly collected.
- A foreman or construction supervisor should monitor onsite hazardous waste storage and disposal procedures.
- Waste storage areas should be kept clean, well organized, and equipped with ample cleanup supplies as appropriate for the materials being stored.
- Perimeter controls, containment structures, covers, and liners should be repaired or replaced as needed to maintain proper function.

- Hazardous spills should be cleaned up and reported in conformance with the applicable Material Safety Data Sheet (MSDS) and the instructions posted at the project site.
- The National Response Center, at (800) 424-8802, should be notified of spills of federal reportable quantities in conformance with the requirements in 40 CFR parts 110, 117, and 302. Also notify the Governors Office of Emergency Services Warning Center at (916) 845-8911.
- A copy of the hazardous waste manifests should be provided.

### References

Blueprint for a Clean Bay: Best Management Practices to Prevent Stormwater Pollution from Construction Related Activities; Santa Clara Valley Nonpoint Source Pollution Control Program, 1995.

Processes, Procedures and Methods to Control Pollution Resulting from All Construction Activity, 430/9-73-007, USEPA, 1973.

Stormwater Quality Handbooks - Construction Site Best Management Practices (BMPs) Manual, State of California Department of Transportation (Caltrans), November 2000.

Stormwater Management for Construction Activities; Developing Pollution Prevention Plans and Best Management Practice, EPA 832-R-92005; USEPA, April 1992.

# Contaminated Soil Management WM-7

| Categories | | |
|---|---|---|
| EC | Erosion Control | |
| SE | Sediment Control | |
| TC | Tracking Control | |
| WE | Wind Erosion Control | |
| NS | Non-Stormwater Management Control | |
| WM | Waste Management and Materials Pollution Control | ☑ |

**Legend:**
☑ **Primary Objective**
☒ **Secondary Objective**

| Targeted Constituents | |
|---|---|
| Sediment | |
| Nutrients | ☑ |
| Trash | ☑ |
| Metals | ☑ |
| Bacteria | ☑ |
| Oil and Grease | ☑ |
| Organics | ☑ |

**Potential Alternatives**

None

If User/Subscriber modifies this fact sheet in any way, the CASQA name/logo and footer below must be removed from each page and not appear on the modified version.

## Description and Purpose

Prevent or reduce the discharge of pollutants to stormwater from contaminated soil and highly acidic or alkaline soils by conducting pre-construction surveys, inspecting excavations regularly, and remediating contaminated soil promptly.

## Suitable Applications

Contaminated soil management is implemented on construction projects in highly urbanized or industrial areas where soil contamination may have occurred due to spills, illicit discharges, aerial deposition, past use and leaks from underground storage tanks.

## Limitations

Contaminated soils that cannot be treated onsite must be disposed of offsite by a licensed hazardous waste hauler. The presence of contaminated soil may indicate contaminated water as well. See NS-2, Dewatering Operations, for more information.

The procedures and practices presented in this BMP are general. The contractor should identify appropriate practices and procedures for the specific contaminants known to exist or discovered onsite.

## Implementation

Most owners and developers conduct pre-construction environmental assessments as a matter of routine. Contaminated soils are often identified during project planning and development with known locations identified in the plans, specifications and in the SWPPP. The contractor should review applicable reports and investigate appropriate call-outs in the

plans, specifications, and SWPPP. Recent court rulings holding contractors liable for cleanup costs when they unknowingly move contaminated soil highlight the need for contractors to confirm a site assessment is completed before earth moving begins.

The following steps will help reduce stormwater pollution from contaminated soil:

- Conduct thorough, pre-construction inspections of the site and review documents related to the site. If inspection or reviews indicated presence of contaminated soils, develop a plan before starting work.
- Look for contaminated soil as evidenced by discoloration, odors, differences in soil properties, abandoned underground tanks or pipes, or buried debris.
- Prevent leaks and spills. Contaminated soil can be expensive to treat and dispose of properly. However, addressing the problem before construction is much less expensive than after the structures are in place.
- The contractor may further identify contaminated soils by investigating:
  - Past site uses and activities
  - Detected or undetected spills and leaks
  - Acid or alkaline solutions from exposed soil or rock formations high in acid or alkaline forming elements
  - Contaminated soil as evidenced by discoloration, odors, differences in soil properties, abandoned underground tanks or pipes, or buried debris.
  - Suspected soils should be tested at a certified laboratory.

***Education***

- Have employees and subcontractors complete a safety training program which meets 29 CFR 1910.120 and 8 CCR 5192 covering the potential hazards as identified, prior to performing any excavation work at the locations containing material classified as hazardous.
- Educate employees and subcontractors in identification of contaminated soil and on contaminated soil handling and disposal procedures.
- Hold regular meetings to discuss and reinforce disposal procedures (incorporate into regular safety meetings).

***Handling Procedures for Material with Aerially Deposited Lead (ADL)***

- Materials from areas designated as containing (ADL) may, if allowed by the contract special provisions, be excavated, transported, and used in the construction of embankments and/or backfill.
- Excavation, transportation, and placement operations should result in no visible dust.
- Caution should be exercised to prevent spillage of lead containing material during transport.

- Quality should be monitored during excavation of soils contaminated with lead.

***Handling Procedures for Contaminated Soils***

- Minimize onsite storage. Contaminated soil should be disposed of properly in accordance with all applicable regulations. All hazardous waste storage will comply with the requirements in Title 22, CCR, Sections 66265.250 to 66265.260.
- Test suspected soils at an approved certified laboratory.
- Work with the local regulatory agencies to develop options for treatment or disposal if the soil is contaminated.
- Avoid temporary stockpiling of contaminated soils or hazardous material.
- Take the following precautions if temporary stockpiling is necessary:
  - Cover the stockpile with plastic sheeting or tarps.
  - Install a berm around the stockpile to prevent runoff from leaving the area.
  - Do not stockpile in or near storm drains or watercourses.
- Remove contaminated material and hazardous material on exteriors of transport vehicles and place either into the current transport vehicle or into the excavation prior to the vehicle leaving the exclusion zone.
- Monitor the air quality continuously during excavation operations at all locations containing hazardous material.
- Procure all permits and licenses, pay all charges and fees, and give all notices necessary and incident to the due and lawful prosecution of the work, including registration for transporting vehicles carrying the contaminated material and the hazardous material.
- Collect water from decontamination procedures and treat or dispose of it at an appropriate disposal site.
- Collect non-reusable protective equipment, once used by any personnel, and dispose of at an appropriate disposal site.
- Install temporary security fence to surround and secure the exclusion zone. Remove fencing when no longer needed.
- Excavate, transport, and dispose of contaminated material and hazardous material in accordance with the rules and regulations of the following agencies (the specifications of these agencies supersede the procedures outlined in this BMP):
  - United States Department of Transportation (USDOT)
  - United States Environmental Protection Agency (USEPA)
  - California Environmental Protection Agency (CAL-EPA)

- California Division of Occupation Safety and Health Administration (CAL-OSHA)
- Local regulatory agencies

***Procedures for Underground Storage Tank Removals***

- Prior to commencing tank removal operations, obtain the required underground storage tank removal permits and approval from the federal, state, and local agencies that have jurisdiction over such work.
- To determine if it contains hazardous substances, arrange to have tested, any liquid or sludge found in the underground tank prior to its removal.
- Following the tank removal, take soil samples beneath the excavated tank and perform analysis as required by the local agency representative(s).
- The underground storage tank, any liquid or sludge found within the tank, and all contaminated substances and hazardous substances removed during the tank removal and transported to disposal facilities permitted to accept such waste.

***Water Control***

- All necessary precautions and preventive measures should be taken to prevent the flow of water, including ground water, from mixing with hazardous substances or underground storage tank excavations. Such preventative measures may consist of, but are not limited to, berms, cofferdams, grout curtains, freeze walls, and seal course concrete or any combination thereof.
- If water does enter an excavation and becomes contaminated, such water, when necessary to proceed with the work, should be discharged to clean, closed top, watertight transportable holding tanks, treated, and disposed of in accordance with federal, state, and local laws.

## Costs

Prevention of leaks and spills is inexpensive. Treatment or disposal of contaminated soil can be quite expensive.

## Inspection and Maintenance

- Inspect and verify that activity–based BMPs are in place prior to the commencement of associated activities. While activities associated with the BMP are under way, inspect BMPs in accordance with General Permit requirements for the associated project type and risk level. It is recommended that at a minimum, BMPs be inspected weekly, prior to forecasted rain events, daily during extended rain events, and after the conclusion of rain events.
- Arrange for contractor's Water Pollution Control Manager, foreman, and/or construction supervisor to monitor onsite contaminated soil storage and disposal procedures.
- Monitor air quality continuously during excavation operations at all locations containing hazardous material.
- Coordinate contaminated soils and hazardous substances/waste management with the appropriate federal, state, and local agencies.

- Implement WM-4, Spill Prevention and Control, to prevent leaks and spills as much as possible.

## References

Blueprint for a Clean Bay: Best Management Practices to Prevent Stormwater Pollution from Construction Related Activities; Santa Clara Valley Nonpoint Source Pollution Control Program, 1995.

Processes, Procedures and Methods to Control Pollution Resulting from All Construction Activity, 430/9-73-007, USEPA, 1973.

Stormwater Quality Handbooks - Construction Site Best Management Practices (BMPs) Manual, State of California Department of Transportation (Caltrans), November 2000.

Stormwater Management for Construction Activities; Developing Pollution Prevention Plans and Best Management Practice, EPA 832-R-92005; USEPA, April 1992.

# Concrete Waste Management WM-8

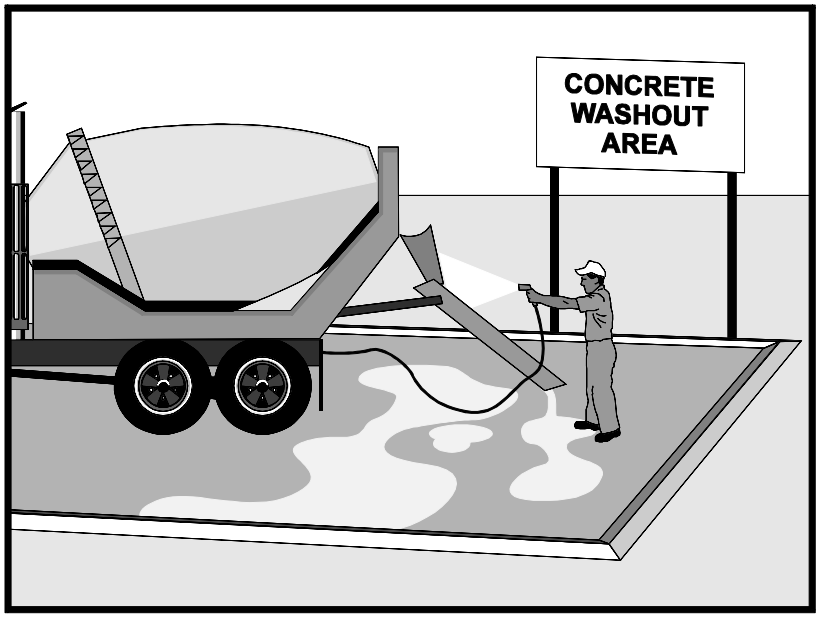


## Categories

| | | |
|---|---|---|
| EC | Erosion Control | |
| SE | Sediment Control | |
| TC | Tracking Control | |
| WE | Wind Erosion Control | |
| NS | Non-Stormwater Management Control | ☒ |
| WM | Waste Management and Materials Pollution Control | ☑ |

**Legend:**

☑ **Primary Category**

☒ **Secondary Category**

## Targeted Constituents

| | |
|---|---|
| Sediment | ☑ |
| Nutrients | |
| Trash | |
| Metals | ☑ |
| Bacteria | |
| Oil and Grease | |
| Organics | |

## Potential Alternatives

None

If User/Subscriber modifies this fact sheet in any way, the CASQA name/logo and footer below must be removed from each page and not appear on the modified version.

## Description and Purpose

Prevent the discharge of pollutants to stormwater from concrete waste by conducting washout onsite or offsite in a designated area, and by employee and subcontractor training.

The General Permit incorporates Numeric Action Levels (NAL) for pH (see Section 2 of this handbook to determine your project's risk level and if you are subject to these requirements).

Many types of construction materials, including mortar, concrete, stucco, cement and block and their associated wastes have basic chemical properties that can raise pH levels outside of the permitted range. Additional care should be taken when managing these materials to prevent them from coming into contact with stormwater flows and raising pH to levels outside the accepted range.

## Suitable Applications

Concrete waste management procedures and practices are implemented on construction projects where:

- Concrete is used as a construction material or where concrete dust and debris result from demolition activities.
- Slurries containing portland cement concrete (PCC) are generated, such as from saw cutting, coring, grinding, grooving, and hydro-concrete demolition.
- Concrete trucks and other concrete-coated equipment are washed onsite.

- Mortar-mixing stations exist.
- Stucco mixing and spraying.
- See also NS-8, Vehicle and Equipment Cleaning.

### Limitations

- Offsite washout of concrete wastes may not always be possible.
- Multiple washouts may be needed to assure adequate capacity and to allow for evaporation.

### Implementation

The following steps will help reduce stormwater pollution from concrete wastes:

- Incorporate requirements for concrete waste management into material supplier and subcontractor agreements.
- Store dry and wet materials under cover, away from drainage areas. Refer to WM-1, Material Delivery and Storage for more information.
- Avoid mixing excess amounts of concrete.
- Perform washout of concrete trucks in designated areas only, where washout will not reach stormwater.
- Do not wash out concrete trucks into storm drains, open ditches, streets, streams or onto the ground. Trucks should always be washed out into designated facilities.
- Do not allow excess concrete to be dumped onsite, except in designated areas.
- For onsite washout:
  - On larger sites, it is recommended to locate washout areas at least 50 feet from storm drains, open ditches, or water bodies. Do not allow runoff from this area by constructing a temporary pit or bermed area large enough for liquid and solid waste.
  - Washout wastes into the temporary washout where the concrete can set, be broken up, and then disposed properly.
  - Washouts shall be implemented in a manner that prevents leaching to underlying soils. Washout containers must be water tight and washouts on or in the ground must be lined with a suitable impervious liner, typically a plastic type material.
- Do not wash sweepings from exposed aggregate concrete into the street or storm drain. Collect and return sweepings to aggregate base stockpile or dispose in the trash.
- See typical concrete washout installation details at the end of this fact sheet.

### *Education*

- Educate employees, subcontractors, and suppliers on the concrete waste management techniques described herein.

- Arrange for contractor's superintendent or representative to oversee and enforce concrete waste management procedures.
- Discuss the concrete management techniques described in this BMP (such as handling of concrete waste and washout) with the ready-mix concrete supplier before any deliveries are made.

***Concrete Demolition Wastes***

- Stockpile concrete demolition waste in accordance with BMP WM-3, Stockpile Management.
- Dispose of or recycle hardened concrete waste in accordance with applicable federal, state or local regulations.

***Concrete Slurry Wastes***

- PCC and AC waste should not be allowed to enter storm drains or watercourses.
- PCC and AC waste should be collected and disposed of or placed in a temporary concrete washout facility (as described in Onsite Temporary Concrete Washout Facility, Concrete Transit Truck Washout Procedures, below).
- A foreman or construction supervisor should monitor onsite concrete working tasks, such as saw cutting, coring, grinding and grooving to ensure proper methods are implemented.
- Saw-cut concrete slurry should not be allowed to enter storm drains or watercourses. Residue from grinding operations should be picked up by means of a vacuum attachment to the grinding machine or by sweeping. Saw cutting residue should not be allowed to flow across the pavement and should not be left on the surface of the pavement. See also NS-3, Paving and Grinding Operations; and WM-10, Liquid Waste Management.
- Concrete slurry residue should be disposed in a temporary washout facility (as described in Onsite Temporary Concrete Washout Facility, Concrete Transit Truck Washout Procedures, below) and allowed to dry. Dispose of dry slurry residue in accordance with WM-5, Solid Waste Management.

***Onsite Temporary Concrete Washout Facility, Transit Truck Washout Procedures***

- Temporary concrete washout facilities should be located a minimum of 50 ft from storm drain inlets, open drainage facilities, and watercourses. Each facility should be located away from construction traffic or access areas to prevent disturbance or tracking.
- A sign should be installed adjacent to each washout facility to inform concrete equipment operators to utilize the proper facilities.
- Temporary concrete washout facilities should be constructed above grade or below grade at the option of the contractor. Temporary concrete washout facilities should be constructed and maintained in sufficient quantity and size to contain all liquid and concrete waste generated by washout operations.

- Temporary washout facilities should have a temporary pit or bermed areas of sufficient volume to completely contain all liquid and waste concrete materials generated during washout procedures.
- Temporary washout facilities should be lined to prevent discharge to the underlying ground or surrounding area.
- Washout of concrete trucks should be performed in designated areas only.
- Only concrete from mixer truck chutes should be washed into concrete wash out.
- Concrete washout from concrete pumper bins can be washed into concrete pumper trucks and discharged into designated washout area or properly disposed of or recycled offsite.
- Once concrete wastes are washed into the designated area and allowed to harden, the concrete should be broken up, removed, and disposed of per WM-5, Solid Waste Management. Dispose of or recycle hardened concrete on a regular basis.
- Temporary Concrete Washout Facility (Type Above Grade)
  - Temporary concrete washout facility (type above grade) should be constructed as shown on the details at the end of this BMP, with a recommended minimum length and minimum width of 10 ft; however, smaller sites or jobs may only need a smaller washout facility. With any washout, always maintain a sufficient quantity and volume to contain all liquid and concrete waste generated by washout operations.
  - Materials used to construct the washout area should conform to the provisions detailed in their respective BMPs (e.g., SE-8 Sandbag Barrier).
  - Plastic lining material should be a minimum of 10 mil in polyethylene sheeting and should be free of holes, tears, or other defects that compromise the impermeability of the material.
  - Alternatively, portable removable containers can be used as above grade concrete washouts. Also called a “roll-off”; this concrete washout facility should be properly sealed to prevent leakage, and should be removed from the site and replaced when the container reaches 75% capacity.
- Temporary Concrete Washout Facility (Type Below Grade)
  - Temporary concrete washout facilities (type below grade) should be constructed as shown on the details at the end of this BMP, with a recommended minimum length and minimum width of 10 ft. The quantity and volume should be sufficient to contain all liquid and concrete waste generated by washout operations.
  - Lath and flagging should be commercial type.
  - Plastic lining material should be a minimum of 10 mil polyethylene sheeting and should be free of holes, tears, or other defects that compromise the impermeability of the material.

- The base of a washout facility should be free of rock or debris that may damage a plastic liner.

***Removal of Temporary Concrete Washout Facilities***

- When temporary concrete washout facilities are no longer required for the work, the hardened concrete should be removed and properly disposed or recycled in accordance with federal, state or local regulations. Materials used to construct temporary concrete washout facilities should be removed from the site of the work and properly disposed or recycled in accordance with federal, state or local regulations..

- Holes, depressions or other ground disturbance caused by the removal of the temporary concrete washout facilities should be backfilled and repaired.

## Costs

All of the above are low cost measures. Roll-off concrete washout facilities can be more costly than other measures due to removal and replacement; however, provide a cleaner alternative to traditional washouts. The type of washout facility, size, and availability of materials will determine the cost of the washout.

## Inspection and Maintenance

- BMPs must be inspected in accordance with General Permit requirements for the associated project type and risk level. It is recommended that at a minimum, BMPs be inspected weekly, prior to forecasted rain events, daily during extended rain events, and after the conclusion of rain events.

- Temporary concrete washout facilities should be maintained to provide adequate holding capacity with a minimum freeboard of 4 in. for above grade facilities and 12 in. for below grade facilities. Maintaining temporary concrete washout facilities should include removing and disposing of hardened concrete and returning the facilities to a functional condition. Hardened concrete materials should be removed and properly disposed or recycled in accordance with federal, state or local regulations.

- Washout facilities must be cleaned, or new facilities must be constructed and ready for use once the washout is 75% full.

- Inspect washout facilities for damage (e.g. torn liner, evidence of leaks, signage, etc.). Repair all identified damage.

## References

Blueprint for a Clean Bay: Best Management Practices to Prevent Stormwater Pollution from Construction Related Activities; Santa Clara Valley Nonpoint Source Pollution Control Program, 1995.

Stormwater Quality Handbooks - Construction Site Best Management Practices (BMPs) Manual, State of California Department of Transportation (Caltrans), November 2000, Updated March 2003.

Stormwater Management for Construction Activities; Developing Pollution Prevention Plans and Best Management Practice, EPA 832-R-92005; USEPA, April 1992.

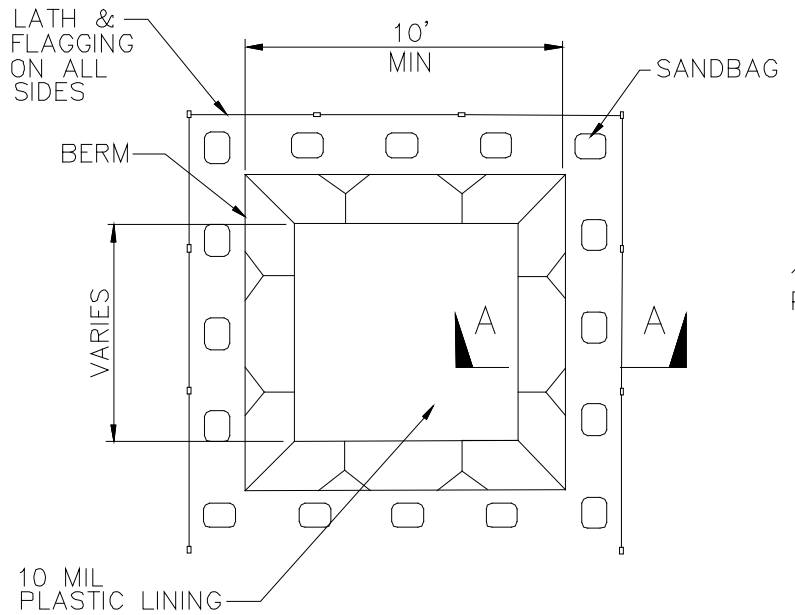


PLAN
NOT TO SCALE
TYPE "BELOW GRADE"

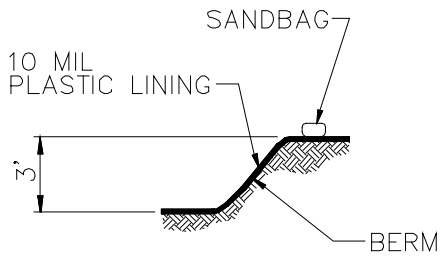


SECTION A–A
NOT TO SCALE

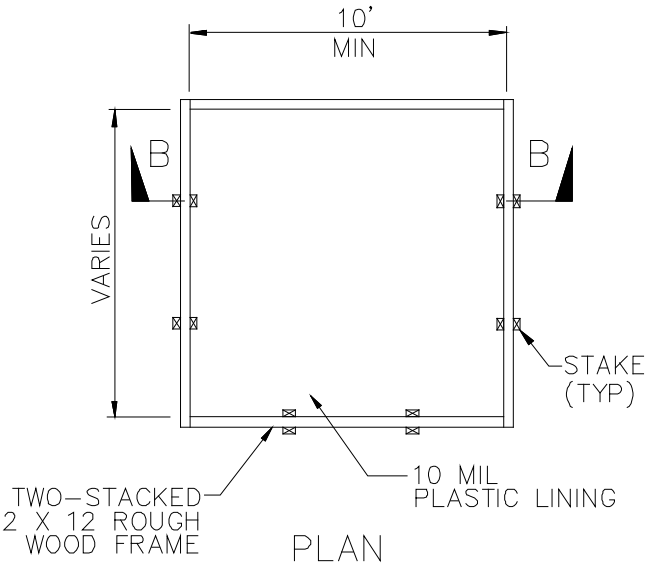


PLAN
NOT TO SCALE
TYPE "ABOVE GRADE"

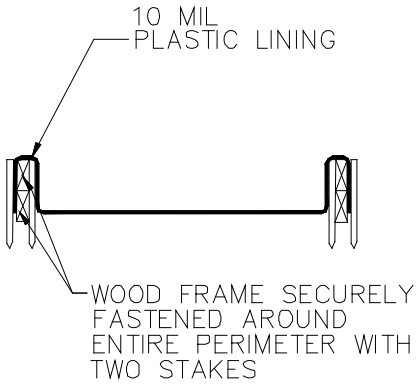


SECTION B–B
NOT TO SCALE

NOTES

1. ACTUAL LAYOUT DETERMINED IN FIELD.
2. THE CONCRETE WASHOUT SIGN SHALL BE INSTALLED WITHIN 30 FT. OF THE TEMPORARY CONCRETE WASHOUT FACILITY.

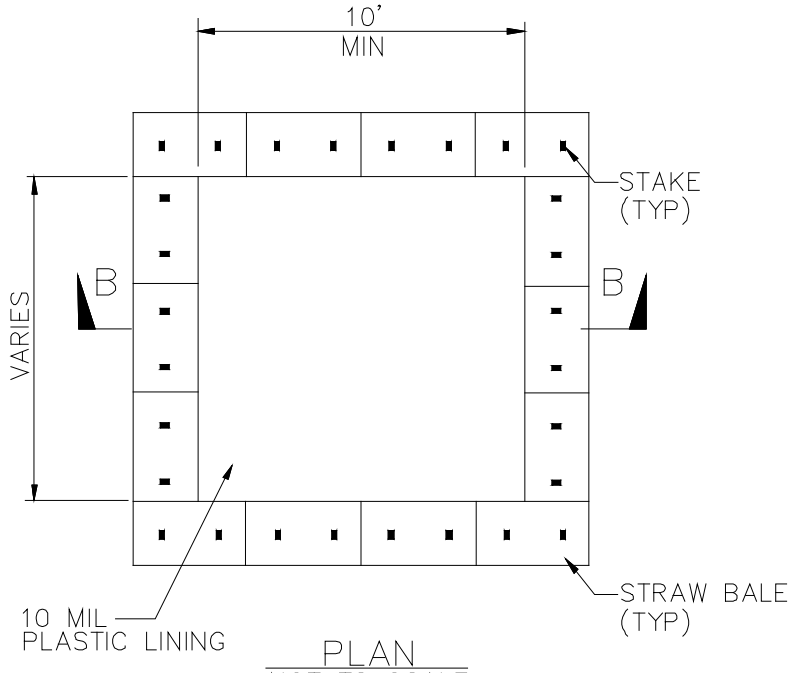


PLAN
NOT TO SCALE
TYPE "ABOVE GRADE"
WITH STRAW BALES

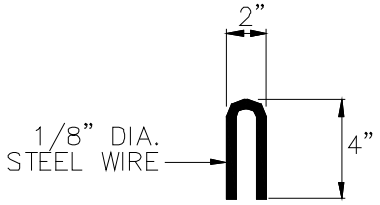


STAPLE DETAIL

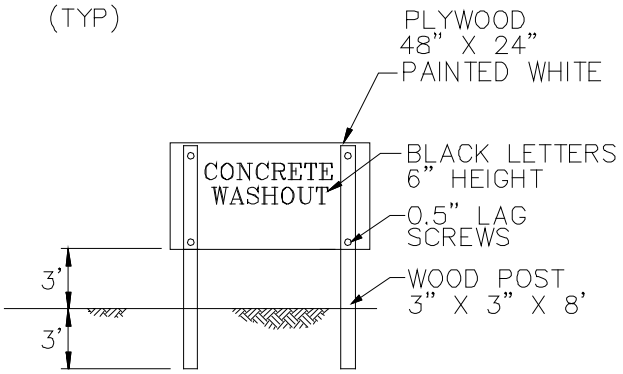


CONCRETE WASHOUT
SIGN DETAIL
(OR EQUIVALENT)

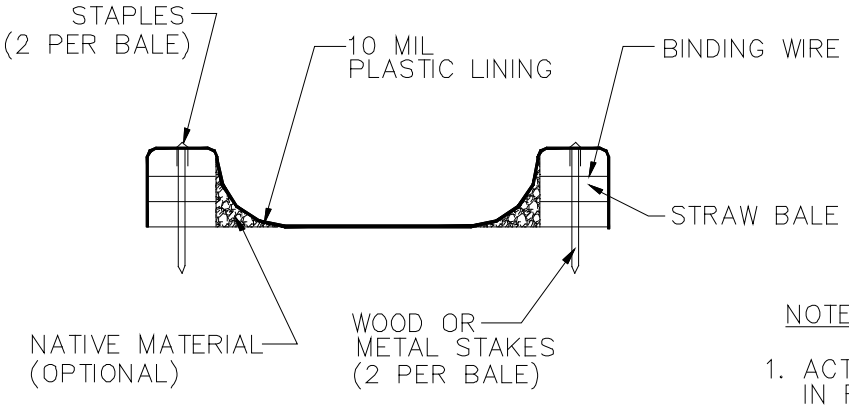


SECTION B–B
NOT TO SCALE

NOTES

1. ACTUAL LAYOUT DETERMINED IN FIELD.
2. THE CONCRETE WASHOUT SIGN SHALL BE INSTALLED WITHIN 30 FT. OF THE TEMPORARY CONCRETE WASHOUT FACILITY.

# Sanitary/Septic Waste Management WM-9

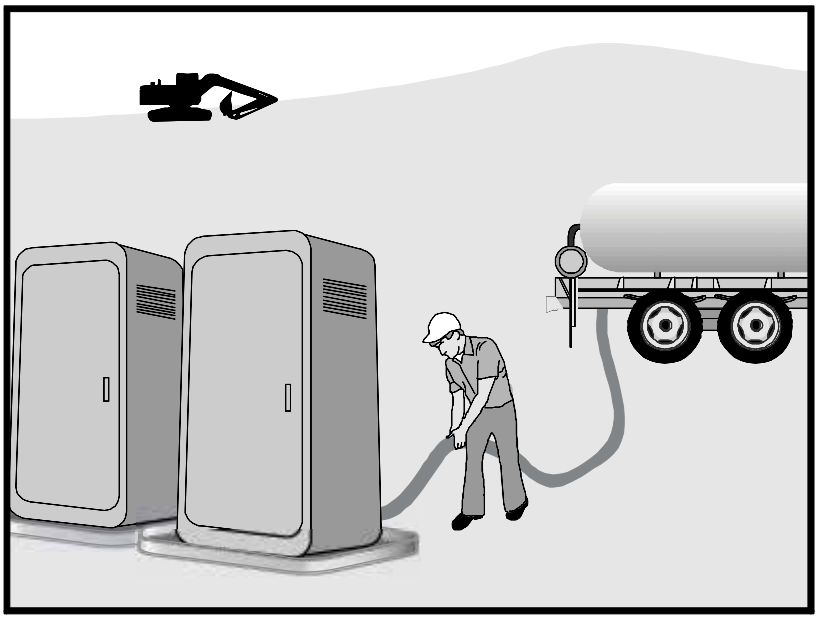

## Description and Purpose

Proper sanitary and septic waste management prevent the discharge of pollutants to stormwater from sanitary and septic waste by providing convenient, well-maintained facilities, and arranging for regular service and disposal.

## Suitable Applications

Sanitary septic waste management practices are suitable for use at all construction sites that use temporary or portable sanitary and septic waste systems.

## Limitations

None identified.

## Implementation

Sanitary or septic wastes should be treated or disposed of in accordance with state and local requirements. In many cases, one contract with a local facility supplier will be all that it takes to make sure sanitary wastes are properly disposed.

### *Storage and Disposal Procedures*

- Temporary sanitary facilities should be located away from drainage facilities, watercourses, and from traffic circulation. If site conditions allow, place portable facilities a minimum of 50 feet from drainage conveyances and traffic areas. When subjected to high winds or risk of high winds, temporary sanitary facilities should be secured to prevent overturning.

## Categories

| | | |
|---|---|---|
| EC | Erosion Control | |
| SE | Sediment Control | |
| TC | Tracking Control | |
| WE | Wind Erosion Control | |
| NS | Non-Stormwater Management Control | |
| WM | Waste Management and Materials Pollution Control | ☑ |

**Legend:**

☑ **Primary Category**

☒ **Secondary Category**

## Targeted Constituents

| | |
|---|---|
| Sediment | |
| Nutrients | ☑ |
| Trash | ☑ |
| Metals | |
| Bacteria | ☑ |
| Oil and Grease | |
| Organics | ☑ |

## Potential Alternatives

None

If User/Subscriber modifies this fact sheet in any way, the CASQA name/logo and footer below must be removed from each page and not appear on the modified version.

- Temporary sanitary facilities must be equipped with containment to prevent discharge of pollutants to the stormwater drainage system of the receiving water.
- Consider safety as well as environmental implications before placing temporary sanitary facilities.
- Wastewater should not be discharged or buried within the project site.
- Sanitary and septic systems that discharge directly into sanitary sewer systems, where permissible, should comply with the local health agency, city, county, and sewer district requirements.
- Only reputable, licensed sanitary and septic waste haulers should be used.
- Sanitary facilities should be located in a convenient location.
- Temporary septic systems should treat wastes to appropriate levels before discharging.
- If using an onsite disposal system (OSDS), such as a septic system, local health agency requirements must be followed.
- Temporary sanitary facilities that discharge to the sanitary sewer system should be properly connected to avoid illicit discharges.
- Sanitary and septic facilities should be maintained in good working order by a licensed service.
- Regular waste collection by a licensed hauler should be arranged before facilities overflow.
- If a spill does occur from a temporary sanitary facility, follow federal, state and local regulations for containment and clean-up.

***Education***

- Educate employees, subcontractors, and suppliers on sanitary and septic waste storage and disposal procedures.
- Educate employees, subcontractors, and suppliers of potential dangers to humans and the environment from sanitary and septic wastes.
- Instruct employees, subcontractors, and suppliers in identification of sanitary and septic waste.
- Hold regular meetings to discuss and reinforce the use of sanitary facilities (incorporate into regular safety meetings).
- Establish a continuing education program to indoctrinate new employees.

## Costs

All of the above are low cost measures.

# Liquid Waste Management WM-10

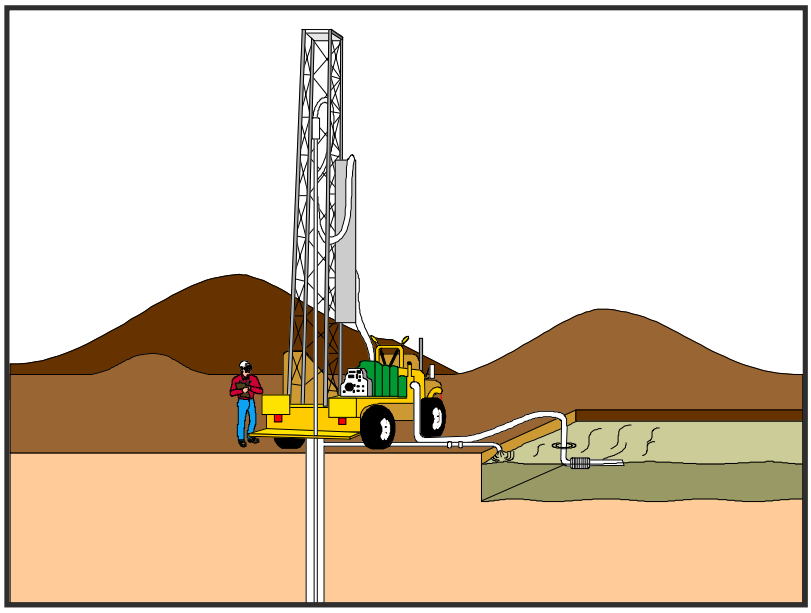

| Categories | | |
|---|---|---|
| EC | Erosion Control | |
| SE | Sediment Control | |
| TC | Tracking Control | |
| WE | Wind Erosion Control | |
| NS | Non-Stormwater Management Control | |
| WM | Waste Management and Materials Pollution Control | ☑ |

**Legend:**

☑ **Primary Objective**

☒ **Secondary Objective**

| Targeted Constituents | |
|---|---|
| Sediment | ☑ |
| Nutrients | ☑ |
| Trash | ☑ |
| Metals | ☑ |
| Bacteria | |
| Oil and Grease | ☑ |
| Organics | |

**Potential Alternatives**

None

If User/Subscriber modifies this fact sheet in any way, the CASQA name/logo and footer below must be removed from each page and not appear on the modified version.

## Description and Purpose

Liquid waste management includes procedures and practices to prevent discharge of pollutants to the storm drain system or to watercourses as a result of the creation, collection, and disposal of non-hazardous liquid wastes.

## Suitable Applications

Liquid waste management is applicable to construction projects that generate any of the following non-hazardous by-products, residuals, or wastes:

- Drilling slurries and drilling fluids
- Grease-free and oil-free wastewater and rinse water
- Dredgings
- Other non-stormwater liquid discharges not permitted by separate permits

## Limitations

- Disposal of some liquid wastes may be subject to specific laws and regulations or to requirements of other permits secured for the construction project (e.g., NPDES permits, Army Corps permits, Coastal Commission permits, etc.).
- Liquid waste management does not apply to dewatering operations (NS-2 Dewatering Operations), solid waste management (WM-5, Solid Waste Management), hazardous wastes (WM-6, Hazardous Waste Management), or

concrete slurry residue (WM-8, Concrete Waste Management).

- Typical permitted non-stormwater discharges can include: water line flushing; landscape irrigation; diverted stream flows; rising ground waters; uncontaminated pumped ground water; discharges from potable water sources; foundation drains; irrigation water; springs; water from crawl space pumps; footing drains; lawn watering; flows from riparian habitats and wetlands; and discharges or flows from emergency fire fighting activities.

## Implementation

### *General Practices*

- Instruct employees and subcontractors how to safely differentiate between non-hazardous liquid waste and potential or known hazardous liquid waste.
- Instruct employees, subcontractors, and suppliers that it is unacceptable for any liquid waste to enter any storm drainage device, waterway, or receiving water.
- Educate employees and subcontractors on liquid waste generating activities and liquid waste storage and disposal procedures.
- Hold regular meetings to discuss and reinforce disposal procedures (incorporate into regular safety meetings).
- Verify which non-stormwater discharges are permitted by the statewide NPDES permit; different regions might have different requirements not outlined in this permit.
- Apply NS-8, Vehicle and Equipment Cleaning for managing wash water and rinse water from vehicle and equipment cleaning operations.

### *Containing Liquid Wastes*

- Drilling residue and drilling fluids should not be allowed to enter storm drains and watercourses and should be disposed of.
- If an appropriate location is available, drilling residue and drilling fluids that are exempt under Title 23, CCR § 2511(g) may be dried by infiltration and evaporation in a containment facility constructed in conformance with the provisions concerning the Temporary Concrete Washout Facilities detailed in WM-8, Concrete Waste Management.
- Liquid wastes generated as part of an operational procedure, such as water-laden dredged material and drilling mud, should be contained and not allowed to flow into drainage channels or receiving waters prior to treatment.
- Liquid wastes should be contained in a controlled area such as a holding pit, sediment basin, roll-off bin, or portable tank.
- Containment devices must be structurally sound and leak free.
- Containment devices must be of sufficient quantity or volume to completely contain the liquid wastes generated.

- Precautions should be taken to avoid spills or accidental releases of contained liquid wastes. Apply the education measures and spill response procedures outlined in WM-4, Spill Prevention and Control.

- Containment areas or devices should not be located where accidental release of the contained liquid can threaten health or safety or discharge to water bodies, channels, or storm drains.

***Capturing Liquid Wastes***

- Capture all liquid wastes that have the potential to affect the storm drainage system (such as wash water and rinse water from cleaning walls or pavement), before they run off a surface.

- Do not allow liquid wastes to flow or discharge uncontrolled. Use temporary dikes or berms to intercept flows and direct them to a containment area or device for capture.

- Use a sediment trap (SE-3, Sediment Trap) for capturing and treating sediment laden liquid waste or capture in a containment device and allow sediment to settle.

***Disposing of Liquid Wastes***

- A typical method to handle liquid waste is to dewater the contained liquid waste, using procedures such as described in NS-2, Dewatering Operations, and SE-2, Sediment Basin, and dispose of resulting solids per WM-5, Solid Waste Management.

- Methods of disposal for some liquid wastes may be prescribed in Water Quality Reports, NPDES permits, Environmental Impact Reports, 401 or 404 permits, and local agency discharge permits, etc. Review the SWPPP to see if disposal methods are identified.

- Liquid wastes, such as from dredged material, may require testing and certification whether it is hazardous or not before a disposal method can be determined.

- For disposal of hazardous waste, see WM-6, Hazardous Waste Management.

- If necessary, further treat liquid wastes prior to disposal. Treatment may include, though is not limited to, sedimentation, filtration, and chemical neutralization.

## Costs

Prevention costs for liquid waste management are minimal. Costs increase if cleanup or fines are involved.

## Inspection and Maintenance

- Inspect and verify that activity–based BMPs are in place prior to the commencement of associated activities. While activities associated with the BMP are under way, inspect weekly during the rainy season and of two-week intervals in the non-rainy season to verify continued BMP implementation.

- Inspect BMPs subject to non-stormwater discharge daily while non-stormwater discharges occur.

- Remove deposited solids in containment areas and capturing devices as needed and at the completion of the task. Dispose of any solids as described in WM-5, Solid Waste Management.
- Inspect containment areas and capturing devices and repair as needed.

### References

Stormwater Quality Handbooks - Construction Site Best Management Practices (BMPs) Manual, State of California Department of Transportation (Caltrans), November 2000.

## Inspection and Maintenance

- BMPs must be inspected in accordance with General Permit requirements for the associated project type and risk level. It is recommended that at a minimum, BMPs be inspected weekly, prior to forecasted rain events, daily during extended rain events, and after the conclusion of rain events.
- Arrange for regular waste collection.
- If high winds are expected, portable sanitary facilities must be secured with spikes or weighed down to prevent over turning.
- If spills or leaks from sanitary or septic facilities occur that are not contained and discharge from the site, non-visible sampling of site discharge may be required. Refer to the General Permit or to your project specific Construction Site Monitoring Plan to determine if and where sampling is required.

## References

Stormwater Quality Handbooks - Construction Site Best Management Practices (BMPs) Manual, State of California Department of Transportation (Caltrans), March 2003.

Stormwater Management for Construction Activities; Developing Pollution Prevention Plans and Best Management Practice, EPA 832-R-92005; USEPA, April 1992.